ADC

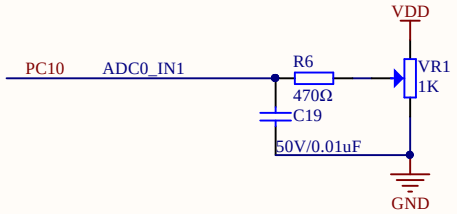

Company Name: GigaDevice		
File Name: ADC		
Revision: 1.0	Data: 2023-9	Author: sijia.wang

CAN

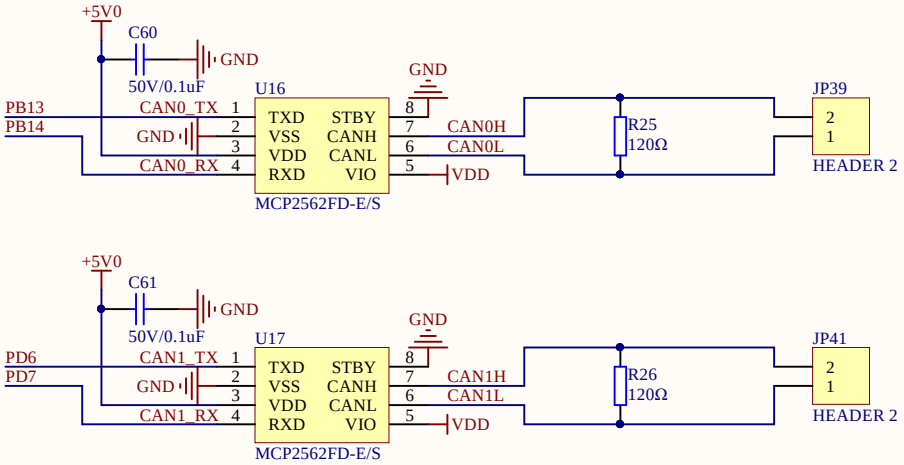

Company Name: GigaDevice		
File Name: CAN		
Revision: 1.0	Data: 2023-9	Author: sijia.wang

CMP

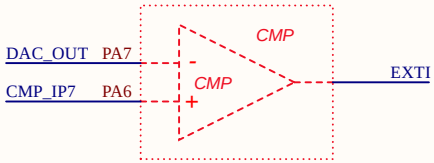

Company Name: GigaDevice		
File Name: CMP		
Revision: 1.0	Data: 2023-9	Author: sijia.wang

DAC

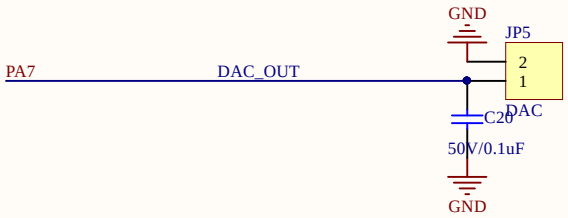

Company Name: GigaDevice		
File Name: DAC		
Revision: 1.0	Data: 2023-9	Author: sijia.wang

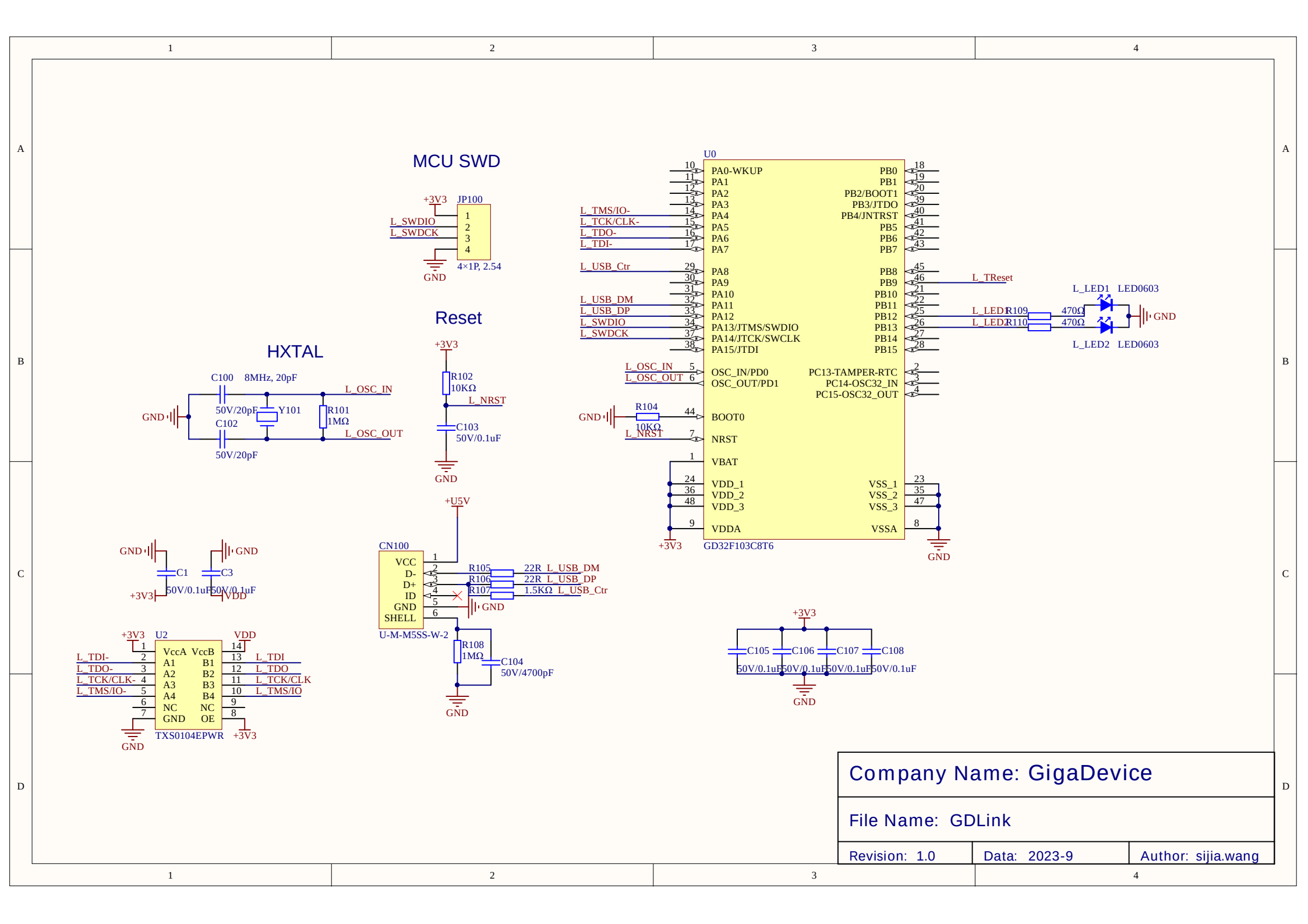

Company Name: GigaDevice		
File Name: GDLink		
Revision: 1.0	Data: 2023-9	Author: sijia.wang

I2C

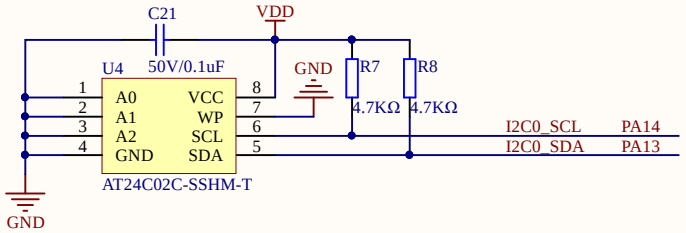

Company Name: GigaDevice		
File Name: I2C		
Revision: 1.0	Data: 2023-9	Author: sijia.wang

I2S

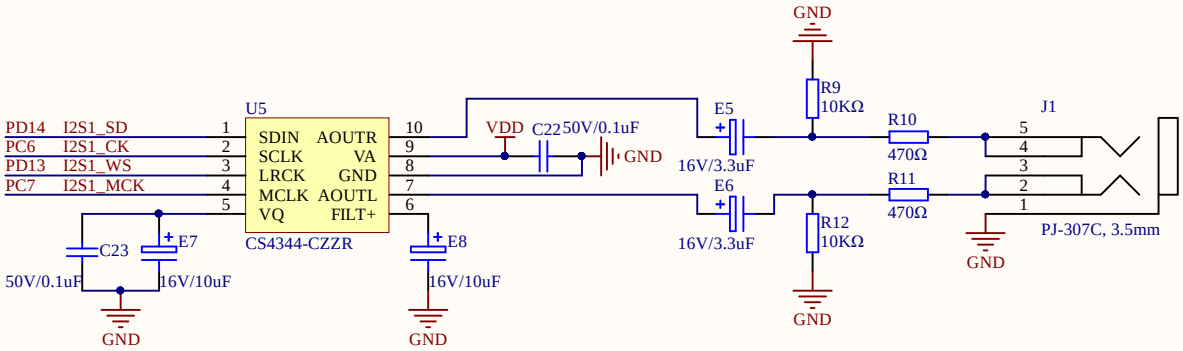

Company Name: GigaDevice		
File Name: I2S		
Revision: 1.0	Data: 2023-9	Author: sijia.wang

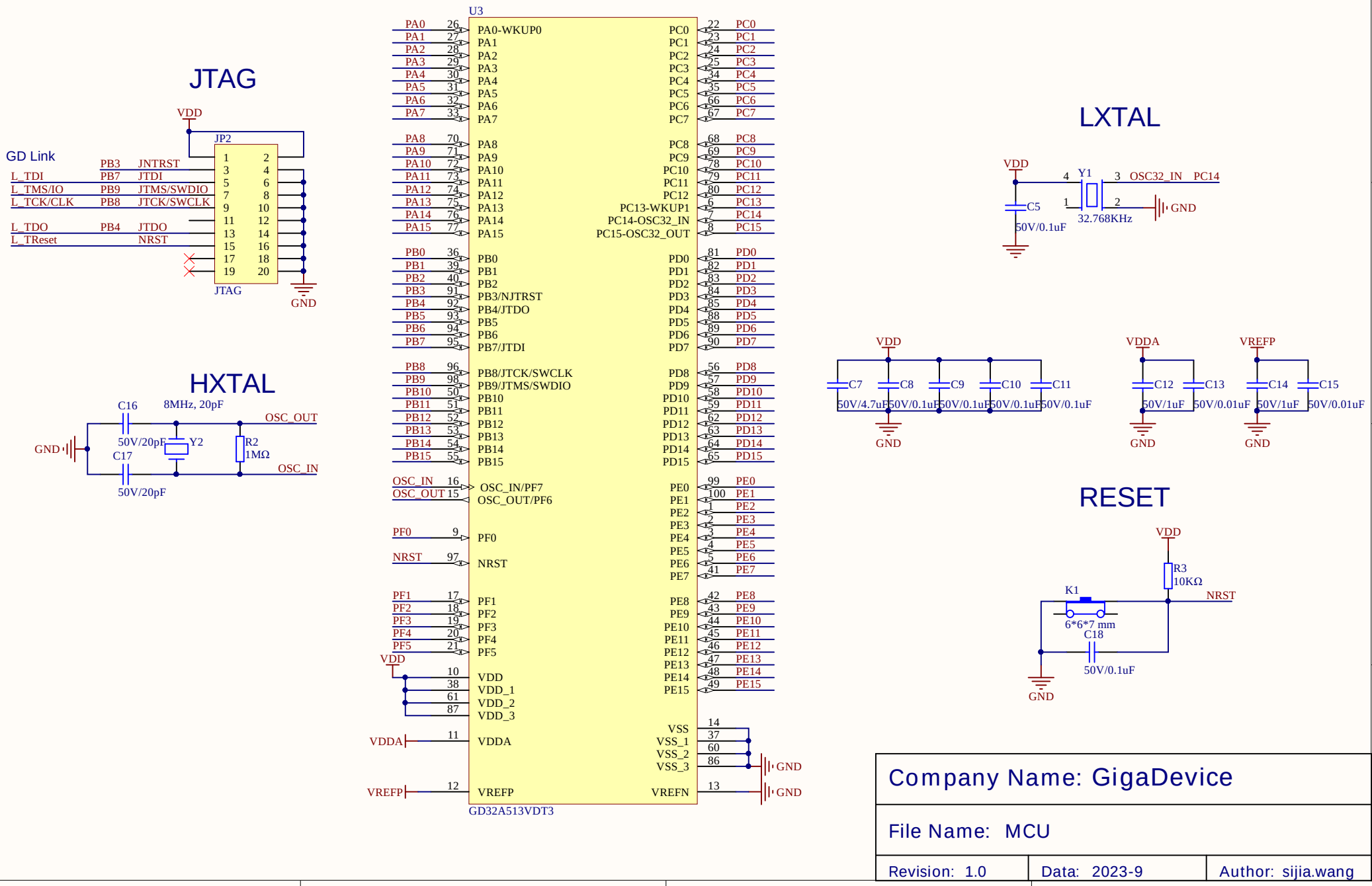
JTAG
VDD
JP2
GD Link
PB3 JNTRST
L_TDI PB7 JTDI
L_TMS/IO PB9 JTMS/SWDIO
L_TCK/CLK PB8 JTCK/SWCLK
L_TDO PB4 JTDO
L_TReset NRST
1 2
3 4
5 6
7 8
9 10
11 12
13 14
15 16
17 18
19 20
JTAG
GND
HXTAL
C16
8MHz, 20pF
OSC_OUT
GND
50V/20pF
Y2
R2
1MΩ
C17
OSC_IN
50V/20pF
U3
PA0 26 PA0-WKUP0
PA1 27 PA1
PA2 28 PA2
PA3 29 PA3
PA4 30 PA4
PA5 31 PA5
PA6 32 PA6
PA7 33 PA7
PA8 70 PA8
PA9 71 PA9
PA10 72 PA10
PA11 73 PA11
PA12 74 PA12
PA13 75 PA13
PA14 76 PA14
PA15 77 PA15
PB0 36 PB0
PB1 39 PB1
PB2 40 PB2
PB3 91 PB3/NJTRST
PB4 92 PB4/JTDO
PB5 93 PB5
PB6 94 PB6
PB7 95 PB7/JTDI
PB8 96 PB8/JTCK/SWCLK
PB9 98 PB9/JTMS/SWDIO
PB10 50 PB10
PB11 51 PB11
PB12 52 PB12
PB13 53 PB13
PB14 54 PB14
PB15 55 PB15
OSC_IN 16 OSC_IN/PF7
OSC_OUT 15 OSC_OUT/PF6
PF0 9 PF0
NRST 97 NRST
PF1 17 PF1
PF2 18 PF2
PF3 19 PF3
PF4 20 PF4
PF5 21 PF5
VDD
10 VDD
38 VDD_1
61 VDD_2
87 VDD_3
VDDA 11 VDDA
VREFP 12 VREFP
PC0 22 PC0
PC1 23 PC1
PC2 24 PC2
PC3 25 PC3
PC4 34 PC4
PC5 35 PC5
PC6 66 PC6
PC7 67 PC7
PC8 68 PC8
PC9 69 PC9
PC10 78 PC10
PC11 79 PC11
PC12 80 PC12
PC13-WKUP1 6 PC13
PC14-OSC32_IN 7 PC14
PC15-OSC32_OUT 8 PC15
PD0 81 PD0
PD1 82 PD1
PD2 83 PD2
PD3 84 PD3
PD4 85 PD4
PD5 88 PD5
PD6 89 PD6
PD7 90 PD7
PD8 56 PD8
PD9 57 PD9
PD10 58 PD10
PD11 59 PD11
PD12 62 PD12
PD13 63 PD13
PD14 64 PD14
PD15 65 PD15
PE0 99 PE0
PE1 100 PE1
PE2 1 PE2
PE3 2 PE3
PE4 3 PE4
PE5 4 PE5
PE6 5 PE6
PE7 41 PE7
PE8 42 PE8
PE9 43 PE9
PE10 44 PE10
PE11 45 PE11
PE12 46 PE12
PE13 47 PE13
PE14 48 PE14
PE15 49 PE15
VSS 14
VSS_1 37
VSS_2 60
VSS_3 86
GND
VREFN 13
GND
GD32A513VDT3
LXTAL
VDD
C5
50V/0.1uF
4 Y1 3 OSC32_IN PC14
1 2
32.768KHz
GND
VDD
C7 50V/4.7uF
C8 50V/0.1uF
C9 50V/0.1uF
C10 50V/0.1uF
C11 50V/0.1uF
GND
VDDA
C12 50V/1uF
C13 50V/0.01uF
GND
VREFP
C14 50V/1uF
C15 50V/0.01uF
GND
RESET
VDD
R3
10KΩ
K1
NRST
6*6*7 mm
C18
50V/0.1uF
GND
Company Name: GigaDevice
File Name: MCU
Revision: 1.0
Data: 2023-9
Author: sijia.wang

Extension Pin

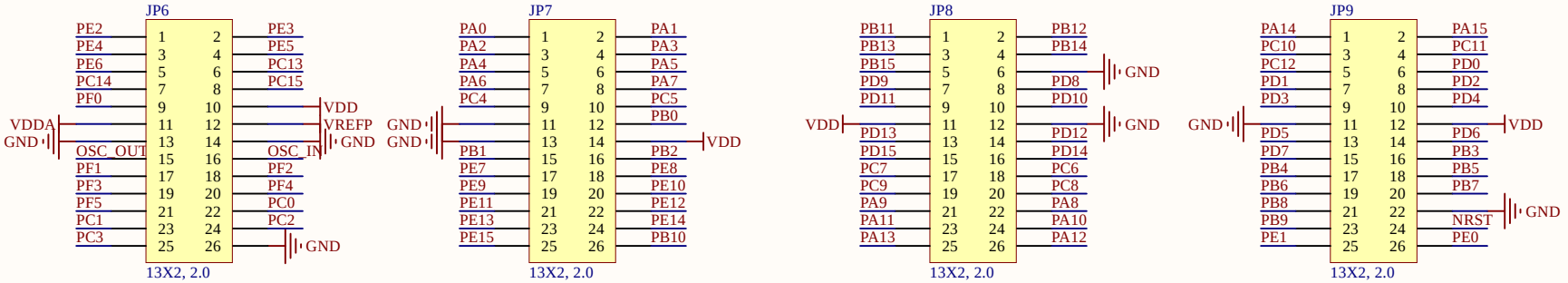

LED

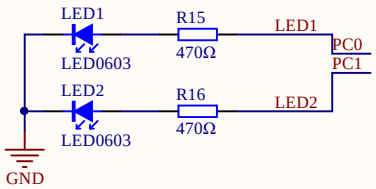

KEY

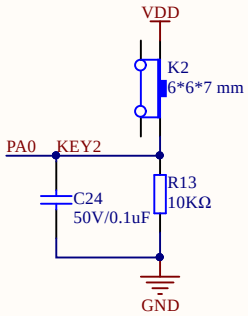

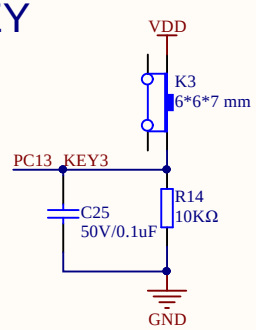

Company Name: GigaDevice		
File Name: Peripherals		
Revision: 1.0	Data: 2023-9	Author: sijia.wang

POWER

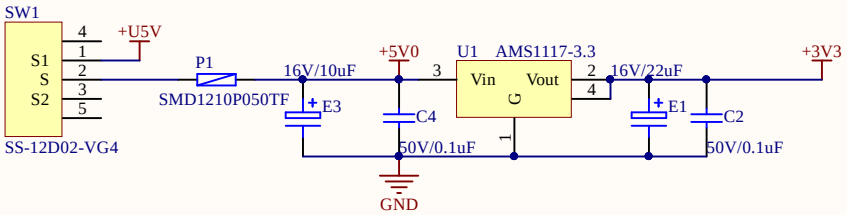

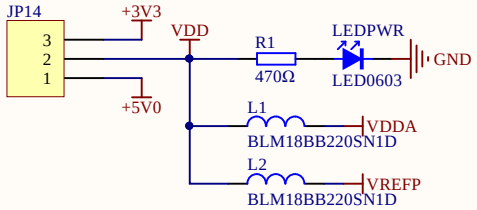

Company Name: GigaDevice		
File Name: POWER		
Revision: 1.0	Data: 2023-9	Author: sijia.wang

QSPI

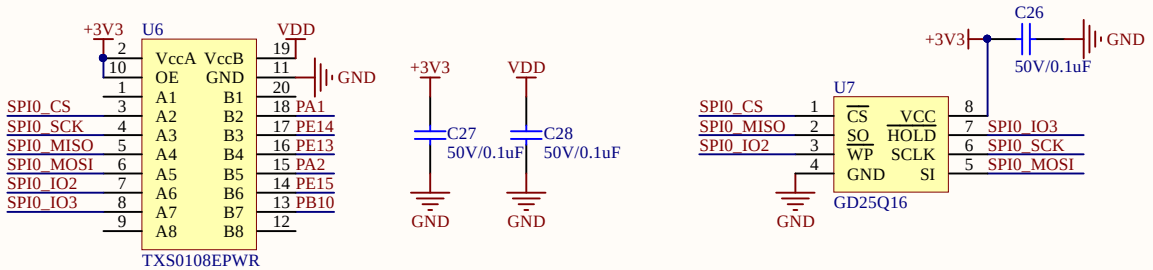

Company Name: GigaDevice		
File Name: SPI		
Revision: 1.0	Data: 2023-9	Author: sijia.wang

USART0 To USB

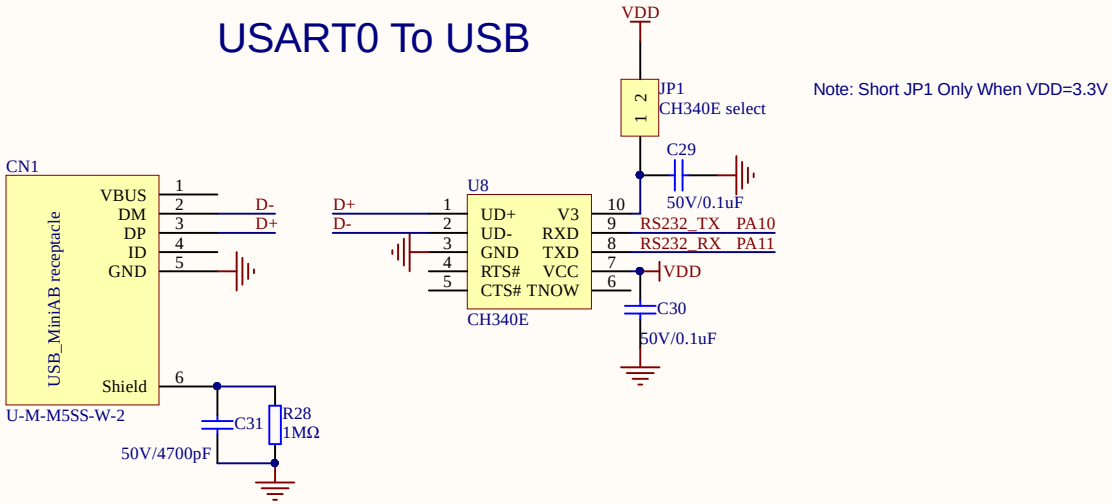

USART0-LIN

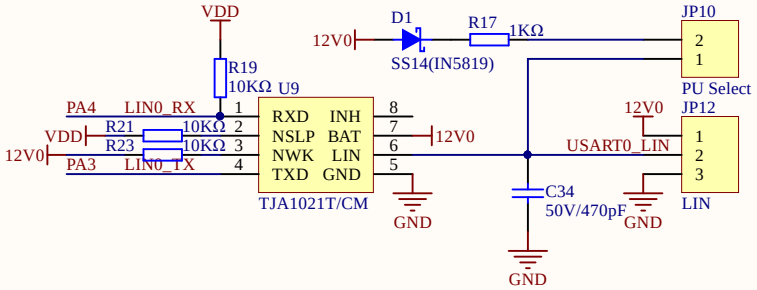

USART1-LIN

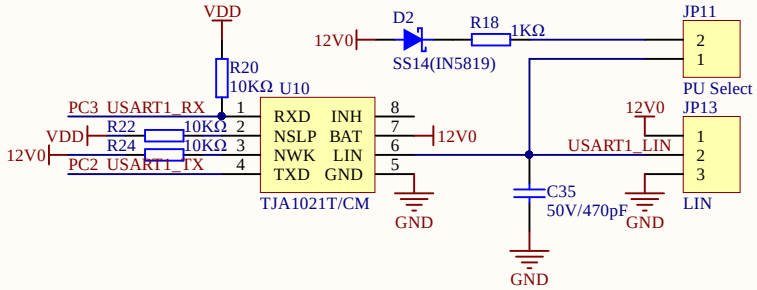

Company Name: GigaDevice		
File Name: USART		
Revision: 1.0	Data: 2023-9	Author: sijia.wang

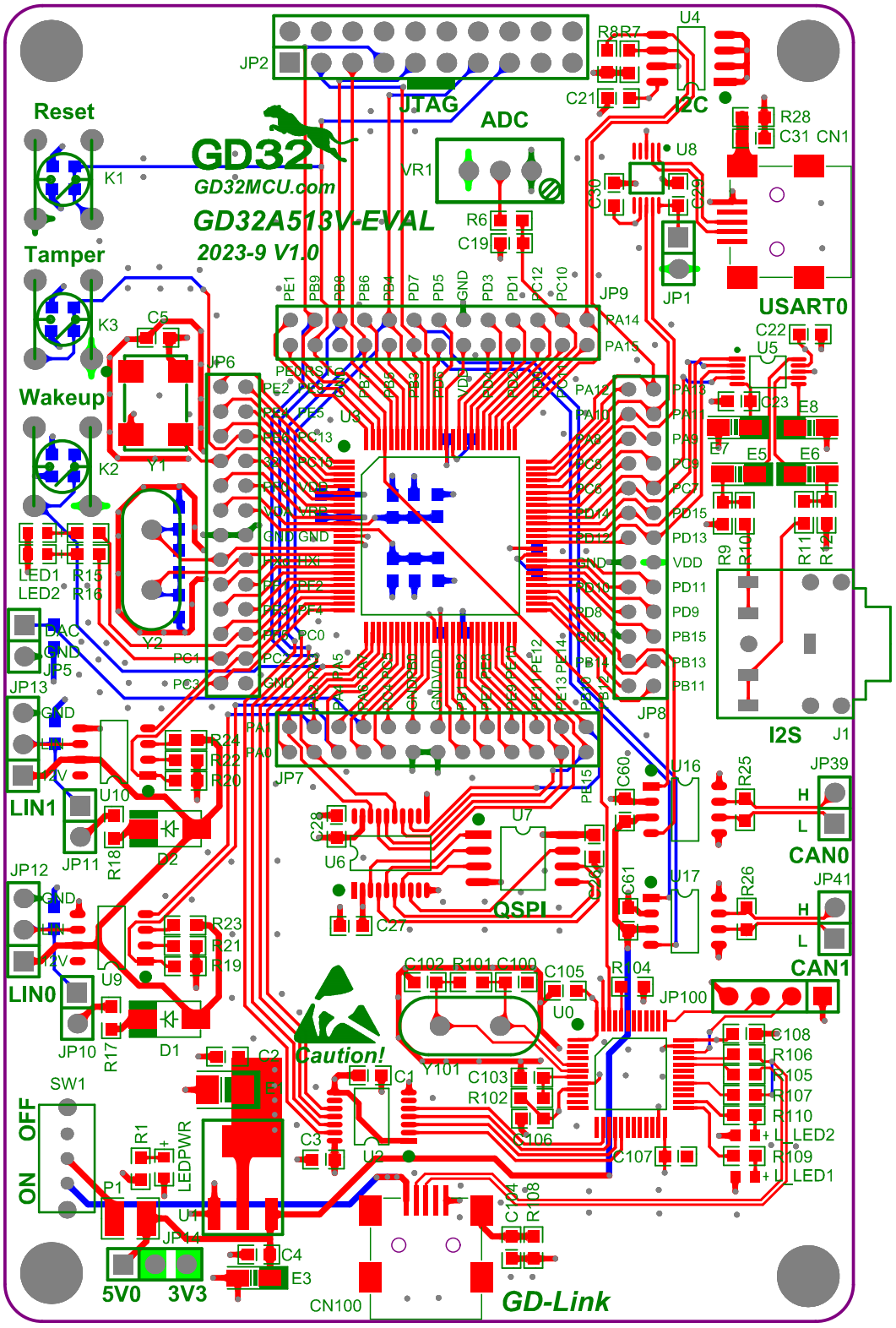
GD32
GD32MCU.com
GD32A513V-EVAL
2023-9 V1.0
Reset
Tamper
Wakeup
JTAG
ADC
I2C
USART0
I2S
CAN0
CAN1
QSPI
LIN1
LIN0
Caution!
GD-Link
5V0
3V3
OFF
ON
SW1
LEDPWR
LED1
LED2
JP2
JP9
JP6
JP7
JP8
JP1
JP39
JP41
JP100
JP13
JP12
JP11
JP10
JP14
CN1
CN100
VR1
Y1
Y2
Y101
U0
U3
U4
U5
U6
U7
U8
U9
U10
U16
U17
U1
U2
D1
D2
P1
E3
E5
E6
E7
E8
J1
K1
K2
K3
C1
C2
C3
C4
C5
C19
C21
C22
C23
C27
C28
C30
C31
C60
C61
C100
C102
C103
C104
C105
C106
C107
C108
R6
R8
R7
R9
R10
R11
R12
R15
R16
R17
R18
R19
R20
R21
R22
R23
R24
R25
R26
R28
R101
R102
R104
R105
R106
R107
R108
R109
R110
R1
VDD
GND
DAC
PA14
PA15
PA12
PA11
PA9
PC7
PD15
PD13
PD11
PD9
PB15
PB13
PB11
PE1
PB9
PB8
PB6
PB4
PD7
PD5
PD3
PD1
PC12
PC10
PC13
PC0
PC1
PC3
PA0
PA1
PA5
PA6
PA7
PA8
PA9
PA10
PA11
PA12
PA13
PA14
PA15
PB15
PB14
PB13
PB12
PE12
PE13
PE14
PE15
PE2
PE3
PE4
PE5
PE6
PE7
PE8
PE9
PE10
PE11
PE12
PE13
PE14
PE15
PC0
PC1
PC2
PC3
PC4
PC5
PC6
PC7
PC8
PC9
PC10
PC11
PC12
PC13
PC14
PC15
PD0
PD1
PD2
PD3
PD4
PD5
PD6
PD7
PD8
PD9
PD10
PD11
PD12
PD13
PD14
PD15
PA0
PA1
PA2
PA3
PA4
PA5
PA6
PA7
PA8
PA9
PA10
PA11
PA12
PA13
PA14
PA15
PB0
PB1
PB2
PB3
PB4
PB5
PB6
PB7
PB8
PB9
PB10
PB11
PB12
PB13
PB14
PB15
H
L