GigaDevice Semiconductor Inc.

GD32H737/757/759
Arm® Cortex®-M7 32-bit MCU

User Manual

Revision 1.3

(May. 2024)

Table of Contents

Table of Contents 2
List of Figures 38
List of Tables 52
1. System and memory architecture 59
1.1. Arm® Cortex®-M7 processor 59
1.2. System architecture 60
1.2.1. Bus matrix Region 0 63
1.2.2. Bus matrix Region 1 63
1.2.3. Bus matrix Region 2 64
1.3. Memory map 65
1.3.1. On-chip SRAM memory 73
1.3.2. On-chip flash memory overview 75
1.4. Boot configuration 75
1.5. System configuration controller (SYSCFG) 76
1.6. Timer break input lock 77
1.7. AXI interconnect matrix (AXIIM) 77
1.7.1. Characteristics 77
1.7.2. Function overview 77
1.8. System configuration registers 79
1.8.1. Peripheral mode configuration register (SYSCFG_PMCFG) 79
1.8.2. EXTI sources selection register 0 (SYSCFG_EXTISS0) 81
1.8.3. EXTI sources selection register 1 (SYSCFG_EXTISS1) 82
1.8.4. EXTI sources selection register 2 (SYSCFG_EXTISS2) 83
1.8.5. EXTI sources selection register 3 (SYSCFG_EXTISS3) 84
1.8.6. Lockup control register (SYSCFG_LKCTL) 86
1.8.7. I/O compensation control register (SYSCFG_CPSCTL) 87
1.8.8. I/O compensation cell code configuration register (SYSCFG_CPSCCCFG) 88
1.8.9. Timer input selection register 0 (SYSCFG_TIMERCISEL0) 89
1.8.10. Timer input selection register 1 (SYSCFG_TIMERCISEL1) 90
1.8.11. Timer input selection register 2 (SYSCFG_TIMERCISEL2) 91
1.8.12. Timer input selection register 3 (SYSCFG_TIMERCISEL3) 92
1.8.13. Timer input selection register 4 (SYSCFG_TIMERCISEL4) 94
1.8.14. Timer input selection register 5 (SYSCFG_TIMERCISEL5) 95
1.8.15. Timer input selection register 6 (SYSCFG_TIMERCISEL6) 97
1.8.16. CPU ICACHE error status register(SYSCFG_CPUICAC) 98
1.8.17. CPU DCACHE error status register (SYSCFG_CPUDCAC) 99

1.8.18. FPU interrupt enable register (SYSCFG_FPUINTEN) 99
1.8.19. SRAM configuration register 0 (SYSCFG_SRAMCFG0) 100
1.8.20. SRAM configuration register 1 (SYSCFG_SRAMCFG1) 101
1.8.21. TIMERx configuration register 0 (SYSCFG_TIMERxCFG0, x=0, 7) 101
1.8.22. TIMERx configuration register 1 (SYSCFG_TIMERxCFG1, x=0, 7) 104
1.8.23. TIMERx configuration register 2 (SYSCFG_TIMERxCFG2, x=0, 7) 106
1.8.24. TIMERx configuration register 0 (SYSCFG_TIMERxCFG0, x=1, 2, 3, 4, 22, 23, 30, 31) .. 107
1.8.25. TIMERx configuration register 1 (SYSCFG_TIMERxCFG1, x=1, 2, 3, 4, 22, 23, 30, 31) .. 109
1.8.26. TIMERx configuration register 2 (SYSCFG_TIMERxCFG2, x=1, 2, 3, 4, 22, 23, 30, 31) ... 111
1.8.27. TIMERx configuration register 0 (SYSCFG_TIMERxCFG0, x=14, 40, 41, 42, 43, 44) 113
1.8.28. TIMERx configuration register 1 (SYSCFG_TIMERxCFG1, x=14, 40, 41, 42, 43, 44) 115
1.8.29. TIMERx configuration register 2 (SYSCFG_TIMERxCFG2, x=14, 40, 41, 42, 43, 44) 116
1.8.30. User configuration register (SYSCFG_USERCFG) 117

1.9. AXI interconnect registers 118
1.9.1. AXI peripheral ID4 register (AXI_PERIPH_ID4) 118
1.9.2. AXI peripheral ID0 register (AXI_PERIPH_ID0) 118
1.9.3. AXI peripheral ID1 register (AXI_PERIPH_ID1) 119
1.9.4. AXI peripheral ID2 register (AXI_PERIPH_ID2) 119
1.9.5. AXI peripheral ID3 register (AXI_PERIPH_ID3) 120
1.9.6. AXI componet ID0 register (AXI_COMP_ID0) 120
1.9.7. AXI componet ID1 register (AXI_COMP_ID1) 120
1.9.8. AXI componet ID2 register (AXI_COMP_ID2) 121
1.9.9. AXI componet ID3 register (AXI_COMP_ID3) 121
1.9.10. AXI Master Port x bus matrix issuing functionality control register (AXI_MPxBM_ISS_CTL) 122
1.9.11. AXI Master Port x bus matrix functionality control register (AXI_MPxBM_CTL) 122
1.9.12. AXI Master Port x long burst functionality control register (AXI_MPx_LB_CTL) 123
1.9.13. AXI Master Port x issuing functionality control register (AXI_MPx_ISS_CTL) 123
1.9.14. AXI Slave Port x functionality control register (AXI_SPx_CTL) 124
1.9.15. AXI Slave Port x AHB issuing functionality control register (AXI_SPx_AHBISS_CTL) 124
1.9.16. AXI Slave Port x read QOS control register (AXI_SPx_RDQOS_CTL) 125
1.9.17. AXI Slave Port x write QOS control register (AXI_SPx_WRQOS_CTL) 125
1.9.18. AXI Slave Port x issuing functionality control register (AXI_SPx_ISS_CTL) 126

1.10. Device electronic signature 126
1.10.1. Memory density information 127
1.10.2. Unique device ID (96 bits) 127

2. RAM ECC monitor unit (RAMECCMU) 129

2.1. Characteristics 129

2.2. Function overview 129

2.3. Register definition 131
2.3.1. RAMECCMU global interruput register (RAMECCMU_INT) 131

2.3.2. RAMECCMU monitor x control register (RAMECCMU_MxCTL) 131
2.3.3. RAMECCMU monitor x status register (RAMECCMU_MxSTAT) 132
2.3.4. RAMECCMU monitor x failing address register (RAMECCMU_MxFADDR) 133
2.3.5. RAMECCMU monitor x failing data low register (RAMECCMU_MxFDL) 134
2.3.6. RAMECCMU monitor x failing data high register (RAMECCMU_MxFDH) 134
2.3.7. RAMECCMU monitor x failing ECC error code register (RAMECCMU_MxFECODE) 134

3. Flash memory controller (FMC) 136

3.1. Overview 136

3.2. Characteristics 136

3.3. Function overview 136

3.3.1. Flash memory architecture 136
3.3.2. Read operations 137
3.3.3. Unlock the FMC_CTL and FMC_OBCTL register 138
3.3.4. Sector erase 139
3.3.5. Mass erase 140
3.3.6. Main flash Programming 144
3.3.7. Option bytes 145
3.3.8. Sector erase/program protection 148
3.3.9. Security protection 149
3.3.10. Dedicated code read protection area 151
3.3.11. Secure user area 153
3.3.12. Secure mode 154
3.3.13. Basic security service 156
3.3.14. Error description 157
3.3.15. FMC interrupts 159

3.4. Register definition 160

3.4.1. Unlock key register (FMC_KEY) 160
3.4.2. Option byte unlock key register (FMC_OBKEY) 160
3.4.3. Control register (FMC_CTL) 160
3.4.4. Status register (FMC_STAT) 162
3.4.5. Address register (FMC_ADDR) 163
3.4.6. Option byte control register (FMC_OBCTL) 164
3.4.7. Option byte status register 0 (FMC_OBSTAT0_EFT) 165
3.4.8. Option byte status register 0 (FMC_OBSTAT0_MDF) 166
3.4.9. DCRP address register (FMC_DCRPADDR_EFT) 168
3.4.10. DCRP address register (FMC_DCRPADDR_MDF) 169
3.4.11. Secure address register (FMC_SCRADDR_EFT) 170
3.4.12. Secure address register (FMC_SCRADDR_MDF) 170
3.4.13. Erase/program protection register (FMC_WP_EFT) 171
3.4.14. Erase/program protection register (FMC_WP_MDF) 172
3.4.15. Boot address register (FMC_BTADDR_EFT) 173
3.4.16. Boot address register (FMC_BTADDR_MDF) 173

3.4.17. Option byte status register 1 (FMC_OBSTAT1_EFT) ... 174
3.4.18. Option byte status register 1 (FMC_OBSTAT1_MDF) ... 175
3.4.19. NO-RTDEC area register (FMC_NODEC) ... 176
3.4.20. AES IV register (FMC_AESIVx_EFT) (x = 0…2) ... 176
3.4.21. AES IV register (FMC_AESIVx_MDF) (x = 0…2) ... 177
3.4.22. Product ID register x (FMC_PIDx) (x = 0,1) ... 177

4. Electronic fuse (EFUSE) ... 179

4.1. Overview ... 179

4.2. Characteristics ... 179

4.3. Function overview ... 179
4.3.1. Block diagram ... 179
4.3.2. Efuse macro description ... 180
4.3.3. Read operation ... 183
4.3.4. Program operation ... 184
4.3.5. AES key CRC function ... 184
4.3.6. EFUSE interrupts ... 185

4.4. Register definition ... 187
4.4.1. Control register (EFUSE_CTL) ... 187
4.4.2. Address register (EFUSE_ADDR) ... 188
4.4.3. Status register (EFUSE_STAT) ... 189
4.4.4. Status flag clear register (EFUSE_STATC) ... 189
4.4.5. User control register (EFUSE_USER_CTL) ... 190
4.4.6. MCU reserved register (EFUSE_MCU_RSV) ... 193
4.4.7. Debug password register x (EFUSE_DPx) (x = 0,1) ... 194
4.4.8. Firmware AES key register x (EFUSE_AES_KEYx) (x = 0…3) ... 195
4.4.9. User data register x (EFUSE_USER_DATAx) (x = 0…3) ... 196

5. Power management unit (PMU) ... 197

5.1. Overview ... 197

5.2. Characteristics ... 197

5.3. Function overview ... 198
5.3.1. Backup domain ... 199
5.3.2. V_{DD} / V_{DDA} power domain ... 200
5.3.3. 0.9V power domain ... 204
5.3.4. Power saving modes ... 209

5.4. Register definition ... 212
5.4.1. Control register 0 (PMU_CTL0) ... 212
5.4.2. Control and status register (PMU_CS) ... 213
5.4.3. Control register 1 (PMU_CTL1) ... 215
5.4.4. Control register 2 (PMU_CTL2) ... 217
5.4.5. Control register 3 (PMU_CTL3) ... 218

5.4.6. Parameter register (PMU_PAR) 219

6. Reset and clock unit (RCU) 221

6.1. Reset control unit (RCTL) 221

6.1.1. Overview 221

6.1.2. Function overview 221

6.2. Clock control unit (CCTL) 222

6.2.1. Overview 222

6.2.2. Characteristics 226

6.2.3. Function overview 226

6.3. Register definition 232

6.3.1. Control register (RCU_CTL) 232

6.3.2. PLL0 register (RCU_PLL0) 234

6.3.3. Clock configuration register 0 (RCU_CFG0) 236

6.3.4. Clock interrupt register (RCU_INT) 238

6.3.5. AHB1 reset register (RCU_AHB1RST) 241

6.3.6. AHB2 reset register (RCU_AHB2RST) 243

6.3.7. AHB3 reset register (RCU_AHB3RST) 244

6.3.8. AHB4 reset register (RCU_AHB4RST) 245

6.3.9. APB1 reset register (RCU_APB1RST) 247

6.3.10. APB2 reset register (RCU_APB2RST) 250

6.3.11. APB3 reset register (RCU_APB3RST) 253

6.3.12. APB4 reset register (RCU_APB4RST) 254

6.3.13. AHB1 enable register (RCU_AHB1EN) 255

6.3.14. AHB2 enable register (RCU_AHB2EN) 257

6.3.15. AHB3 enable register (RCU_AHB3EN) 258

6.3.16. AHB4 enable register (RCU_AHB4EN) 260

6.3.17. APB1 enable register (RCU_APB1EN) 261

6.3.18. APB2 enable register (RCU_APB2EN) 265

6.3.19. APB3 enable register (RCU_APB3EN) 268

6.3.20. APB4 enable register (RCU_APB4EN) 268

6.3.21. AHB1 sleep mode enable register (RCU_AHB1SPEN) 269

6.3.22. AHB2 sleep mode enable register (RCU_AHB2SPEN) 272

6.3.23. AHB3 sleep mode enable register (RCU_AHB3SPEN) 273

6.3.24. AHB4 sleep mode enable register (RCU_AHB4SPEN) 275

6.3.25. APB1 sleep mode enable register (RCU_APB1SPEN) 276

6.3.26. APB2 sleep mode enable register (RCU_APB2SPEN) 280

6.3.27. APB3 sleep mode enable register (RCU_APB3SPEN) 283

6.3.28. APB4 sleep mode enable register (RCU_APB4SPEN) 283

6.3.29. Backup domain control register (RCU_BDCTL) 284

6.3.30. Reset source/clock register (RCU_RSTSCK) 286

6.3.31. PLL clock additional control register (RCU_PLLADDCTL) 288

6.3.32. PLL1 register (RCU_PLL1) 290

6.3.33. PLL2 register (RCU_PLL2) ... 292
6.3.34. Clock configuration register 1 (RCU_CFG1) ... 294
6.3.35. Clock configuration register 2 (RCU_CFG2) ... 296
6.3.36. Clock configuration register 3 (RCU_CFG3) ... 298
6.3.37. PLL all configuration register (RCU_PLLALL) ... 300
6.3.38. PLL0 fraction configuration register (RCU_PLL0FRA) ... 302
6.3.39. PLL1 fraction configuration register (RCU_PLL1FRA) ... 302
6.3.40. PLL2 fraction configuration register (RCU_PLL2FRA) ... 303
6.3.41. Additional clock control register 0 (RCU_ADDCTL0) ... 304
6.3.42. Additional clock control register 1(RCU_ADDCTL1) ... 305
6.3.43. Additional clock interrupt register (RCU_ADDINT) ... 306
6.3.44. Clock configuration register 4 (RCU_CFG4) ... 308
6.3.45. USB clock control register (RCU_USBCLKCTL) ... 309
6.3.46. PLLUSB configuration register (RCU_PLLUSBCFG) ... 311
6.3.47. APB2 additional reset register (RCU_ADDAPB2RST) ... 312
6.3.48. APB2 additional enable register (RCU_ADDAPB2EN) ... 313
6.3.49. APB2 additional sleep enable register (RCU_ADDAPB2SPEN) ... 314
6.3.50. Clock configuration register 5 (RCU_CFG5) ... 314

7. Clock trim controller (CTC) ... 317

7.1. Overview ... 317

7.2. Characteristics ... 317

7.3. Function overview ... 317

7.3.1. REF sync pulse generator ... 318
7.3.2. CTC trim counter ... 318
7.3.3. Frequency evaluation and automatically trim process ... 319
7.3.4. Software program guide ... 320

7.4. Register definition ... 322

7.4.1. Control register 0 (CTC_CTL0) ... 322
7.4.2. Control register 1 (CTC_CTL1) ... 323
7.4.3. Status register (CTC_STAT) ... 324
7.4.4. Interrupt clear register (CTC_INTC) ... 326

8. Interrupt / event controller (EXTI) ... 328

8.1. Overview ... 328

8.2. Characteristics ... 328

8.3. Interrupts function overview ... 328

8.4. External interrupt and event (EXTI) block diagram ... 335

8.5. External interrupt and event function overview ... 335

8.6. Register definition ... 338

8.6.1. Interrupt enable register 0 (EXTI_INTEN0) ... 338

8.6.2. Event enable register 0 (EXTI_EVEN0) ... 338
8.6.3. Rising edge trigger enable register 0 (EXTI_RTEN0) ... 338
8.6.4. Falling edge trigger enable register 0 (EXTI_FTEN0) ... 339
8.6.5. Software interrupt event register 0 (EXTI_SWIEV0) ... 339
8.6.6. Pending register 0 (EXTI_PD0) ... 340
8.6.7. Interrupt enable register 1 (EXTI_INTEN1) ... 340
8.6.8. Event enable register 1 (EXTI_EVEN1) ... 341
8.6.9. Rising edge trigger enable register 1 (EXTI_RTEN1) ... 341
8.6.10. Falling edge trigger enable register 1 (EXTI_FTEN1) ... 341
8.6.11. Software interrupt event register 1 (EXTI_SWIEV1) ... 342
8.6.12. Pending register 1 (EXTI_PD1) ... 342

9. Trigger selection controller (TRIGSEL) ... 344

9.1. Overview ... 344

9.2. Characteristics ... 344

9.3. Function overview ... 344

9.4. Internal connect ... 345

9.5. Register definition ... 356

9.5.1. Trigger selection for EXTOUT register 0 (TRIGSEL_EXTOUT_0) ... 356
9.5.2. Trigger selection for EXTOUT register 1 (TRIGSEL_EXTOUT_1) ... 356
9.5.3. Trigger selection for EXTOUT register 2 (TRIGSEL_EXTOUT_2) ... 357
9.5.4. Trigger selection for EXTOUT register 3 (TRIGSEL_EXTOUT_3) ... 358
9.5.5. Trigger selection for ADC0 register (TRIGSEL_ADC0) ... 358
9.5.6. Trigger selection for ADC1 register (TRIGSEL_ADC1) ... 359
9.5.7. Trigger selection for ADC2 register (TRIGSEL_ADC2) ... 360
9.5.8. Trigger selection for DAC0_OUT0 register (TRIGSEL_DAC0OUT0) ... 360
9.5.9. Trigger selection for DAC0_OUT1 register (TRIGSEL_DAC0OUT1) ... 361
9.5.10. Trigger selection for TIMER0_BRKIN register (TRIGSEL_TIMER0BRKIN) ... 362
9.5.11. Trigger selection for TIMER7_BRKIN register (TRIGSEL_TIMER7BRKIN) ... 362
9.5.12. Trigger selection for TIMER14_BRKIN register (TRIGSEL_TIMER14BRKIN) ... 363
9.5.13. Trigger selection for TIMER15_BRKIN register (TRIGSEL_TIMER15BRKIN) ... 364
9.5.14. Trigger selection for TIMER16_BRKIN register (TRIGSEL_TIMER16BRKIN) ... 365
9.5.15. Trigger selection for TIMER40_BRKIN register (TRIGSEL_TIMER40BRKIN) ... 365
9.5.16. Trigger selection for TIMER41_BRKIN register (TRIGSEL_TIMER41BRKIN) ... 366
9.5.17. Trigger selection for TIMER42_BRKIN register (TRIGSEL_TIMER42BRKIN) ... 367
9.5.18. Trigger selection for TIMER43_BRKIN register (TRIGSEL_TIMER43BRKIN) ... 367
9.5.19. Trigger selection for TIMER44_BRKIN register (TRIGSEL_TIMER44BRKIN) ... 368
9.5.20. Trigger selection for CAN0 register (TRIGSEL_CAN0) ... 368
9.5.21. Trigger selection for CAN1 register (TRIGSEL_CAN1) ... 369
9.5.22. Trigger selection for CAN2 register (TRIGSEL_CAN2) ... 370
9.5.23. Trigger selection for LPDTS register (TRIGSEL_LPDTS) ... 370
9.5.24. Trigger selection for TIMER0_ETI register (TRIGSEL_TIMER0ETI) ... 371

9.5.25. Trigger selection for TIMER1_ETI register (TRIGSEL_TIMER1ETI) 371
9.5.26. Trigger selection for TIMER2_ETI register (TRIGSEL_TIMER2ETI) 372
9.5.27. Trigger selection for TIMER3_ETI register (TRIGSEL_TIMER3ETI) 373
9.5.28. Trigger selection for TIMER4_ETI register (TRIGSEL_TIMER4ETI) 373
9.5.29. Trigger selection for TIMER7_ETI register (TRIGSEL_TIMER7ETI) 374
9.5.30. Trigger selection for TIMER22_ETI register (TRIGSEL_TIMER22ETI) 374
9.5.31. Trigger selection for TIMER23_ETI register (TRIGSEL_TIMER23ETI) 375
9.5.32. Trigger selection for TIMER30_ETI register (TRIGSEL_TIMER30ETI) 376
9.5.33. Trigger selection for TIMER31_ETI register (TRIGSEL_TIMER31ETI) 376
9.5.34. Trigger selection for EDOUT register (TRIGSEL_EDOUT) 377
9.5.35. Trigger selection for HPDF register (TRIGSEL_HPDF) 377
9.5.36. Trigger selection for TIMER0_ITI14 register (TRIGSEL_TIMER0ITI14) 378
9.5.37. Trigger selection for TIMER1_ITI14 register (TRIGSEL_TIMER1ITI14) 379
9.5.38. Trigger selection for TIMER2_ITI14 register (TRIGSEL_TIMER2ITI14) 379
9.5.39. Trigger selection for TIMER3_ITI14 register (TRIGSEL_TIMER3ITI14) 380
9.5.40. Trigger selection for TIMER4_ITI14 register (TRIGSEL_TIMER4ITI14) 380
9.5.41. Trigger selection for TIMER7_ITI14 register (TRIGSEL_TIMER7ITI14) 381
9.5.42. Trigger selection for TIMER14_ITI14 register (TRIGSEL_TIMER14ITI14) 382
9.5.43. Trigger selection for TIMER22_ITI14 register (TRIGSEL_TIMER22ITI14) 382
9.5.44. Trigger selection for TIMER23_ITI14 register (TRIGSEL_TIMER23ITI14) 383
9.5.45. Trigger selection for TIMER30_ITI14 register (TRIGSEL_TIMER30ITI14) 383
9.5.46. Trigger selection for TIMER31_ITI14 register (TRIGSEL_TIMER31ITI14) 384
9.5.47. Trigger selection for TIMER40_ITI14 register (TRIGSEL_TIMER40ITI14) 385
9.5.48. Trigger selection for TIMER41_ITI14 register (TRIGSEL_TIMER41ITI14) 385
9.5.49. Trigger selection for TIMER42_ITI14 register (TRIGSEL_TIMER42ITI14) 386
9.5.50. Trigger selection for TIMER43_ITI14 register (TRIGSEL_TIMER43ITI14) 386
9.5.51. Trigger selection for TIMER44_ITI14 register (TRIGSEL_TIMER44ITI14) 387

10. General-purpose and alternate-function I/Os (GPIO and AFIO) 389

10.1. Overview 389

10.2. Characteristics 389

10.3. Function overview 389

10.3.1. GPIO pin configuration 391
10.3.2. External interrupt/event lines 392
10.3.3. Alternate functions (AF) 392
10.3.4. Additional functions 392
10.3.5. Input configuration 392
10.3.6. Output configuration 392
10.3.7. Analog configuration 393
10.3.8. Alternate function (AF) configuration 394
10.3.9. GPIO locking function 394
10.3.10. GPIO single cycle toggle function 395
10.3.11. I/O compensation unit 395

10.3.12. Analog configuration for ADC 395
10.3.13. Input filtering 396

10.4. Register definition 399
10.4.1. Port control register (GPIOx_CTL, x=A...H, J, K) 399
10.4.2. Port output mode register (GPIOx_OMODE, x=A…H, J, K) 401
10.4.3. Port output speed register (GPIOx_OSPD, x=A...H, J, K) 402
10.4.4. Port pull-up/down register (GPIOx_PUD, x=A…H, J, K) 404
10.4.5. Port input status register (GPIOx_ISTAT, x=A…H, J, K) 406
10.4.6. Port output control register (GPIOx_OCTL, x=A…H, J, K) 406
10.4.7. Port bit operate register (GPIOx_BOP, x=A...H, J, K) 407
10.4.8. Port configuration lock register (GPIOx_LOCK, x=A...H, J, K) 407
10.4.9. Alternate function selected register 0 (GPIOx_AFSEL0, x=A...H, J, K) 408
10.4.10. Alternate function selected register 1 (GPIOx_AFSEL1, x=A…H, J, K) 409
10.4.11. Bit clear register (GPIOx_BC, x=A…H, J, K) 410
10.4.12. Port bit toggle register (GPIOx_TG, x=A…H, J, K) 411
10.4.13. Input filtering register (GPIOx_IFL, x=A...H, J, K) 411
10.4.14. Input filtering type register (GPIOx_IFTP, x=A...H, J, K) 412

11. Cyclic redundancy checks management unit (CRC) 415

11.1. Overview 415

11.2. Characteristics 415

11.3. Function overview 416

11.4. Register definition 417
11.4.1. Data register (CRC_DATA) 417
11.4.2. Free data register (CRC_FDATA) 417
11.4.3. Control register (CRC_CTL) 418
11.4.4. Initialization data register (CRC_IDATA) 418
11.4.5. Polynomial register (CRC_POLY) 419

12. True random number generator (TRNG) 420

12.1. Overview 420

12.2. Characteristics 420

12.3. Function overview 420
12.3.1. LFSR 421
12.3.2. Post processing 421
12.3.3. Conditioning 421
12.3.4. Output FIFO 421
12.3.5. Health tests 422
12.3.6. NIST mode state 423
12.3.7. Operation flow 424
12.3.8. Error flags 424
12.3.9. Low power usage 424

12.4. Register definition ... 426
12.4.1. Control register (TRNG_CTL) ... 426
12.4.2. Status register (TRNG_STAT) ... 428
12.4.3. Data register (TRNG_DATA) ... 429
12.4.4. Health tests configure register (TRNG_HTCFG) ... 429

13. Cryptographic Acceleration Unit (CAU) ... 431

13.1. Overview ... 431

13.2. Characteristics ... 431

13.3. CAU data type and initialization vectors ... 432
13.3.1. Data type ... 432
13.3.2. Initialization vectors ... 433

13.4. Cryptographic acceleration processor ... 433
13.4.1. DES / TDES cryptographic acceleration processor ... 434
13.4.2. AES cryptographic acceleration processor ... 438

13.5. Operating modes ... 446

13.6. CAU DMA interface ... 448

13.7. CAU interrupts ... 448

13.8. CAU suspended mode ... 449

13.9. Register definition ... 450
13.9.1. Control register (CAU_CTL) ... 450
13.9.2. Status register 0 (CAU_STAT0) ... 452
13.9.3. Data input register (CAU_DI) ... 452
13.9.4. Data output register (CAU_DO) ... 453
13.9.5. DMA enable register (CAU_DMAEN) ... 454
13.9.6. Interrupt enable register (CAU_INTEN) ... 454
13.9.7. Status register 1 (CAU_STAT1) ... 455
13.9.8. Interrupt flag register (CAU_INTF) ... 455
13.9.9. Key registers (CAU_KEY0..3(H / L)) ... 456
13.9.10. Initial vector registers (CAU_IV0..1(H / L)) ... 458
13.9.11. GCM or CCM mode context switch register x (CAU_GCMCCMCTXSx) (x=0..7) ... 460
13.9.12. GCM mode context switch register x (CAU_GCMCTXSx) (x=0..7) ... 460

14. Hash Acceleration Unit (HAU) ... 462

14.1. Overview ... 462

14.2. Characteristics ... 462

14.3. HAU data type ... 462

14.4. HAU core ... 464
14.4.1. Automatic data padding ... 464
14.4.2. Digest computing ... 465

14.4.3. Hash mode 466
14.4.4. HMAC mode 466
14.5. HAU suspended mode 466
14.5.1. Transfer data by CPU 467
14.5.2. Transfer data by DMA 467
14.6. HAU interrupt 468
14.6.1. Input FIFO interrupt 468
14.6.2. Calculation completion interrupt 468
14.7. Register definition 469
14.7.1. Control register (HAU_CTL) 469
14.7.2. Data input register (HAU_DI) 470
14.7.3. Configuration register (HAU_CFG) 471
14.7.4. Data output register (HAU_DO0..7) 472
14.7.5. Interrupt enable register (HAU_INTEN) 474
14.7.6. Status and flag register (HAU_STAT) 475
14.7.7. Context switch register x (HAU_CTXSx) (x = 0...53) 475
15. Trigonometric Math Unit (TMU) 477
15.1. Overview 477
15.2. Characteristics 477
15.3. Block diagram 477
15.4. Function overview 478
15.4.1. Data format and configuration 478
15.4.2. Mode configuration 479
15.4.3. TMU precision 488
15.4.4. TMU operation pending 489
15.4.5. Zero-overhead mode 489
15.4.6. Interrupt and DMA requests 490
15.5. Registers definition 490
15.5.1. Control and status register (TMU_CS) 490
15.5.2. Input data register (TMU_IDATA) 493
15.5.3. Output data register (TMU_ODATA) 494
16. Direct memory access controller (DMA) 495
16.1. Overview 495
16.2. Characteristics 495
16.3. Function overview 496
16.3.1. Block diagram 496
16.3.2. Peripheral handshake 498
16.3.3. Data process 498
16.3.4. Address generation 503

16.3.5. Circular mode 504
16.3.6. Switch-buffer mode 504
16.3.7. Transfer operation 505
16.3.8. Transfer finish 506
16.3.9. Channel configuration 507

16.4. Interrupts 508
16.4.1. Flag 509
16.4.2. Exception 509
16.4.3. Error 510
16.4.4. DMA request mapping 512

16.5. Register definition 513
16.5.1. Interrupt flag register 0 (DMA_INTF0) 513
16.5.2. Interrupt flag register 1 (DMA_INTF1) 514
16.5.3. Interrupt flag clear register 0 (DMA_INTC0) 515
16.5.4. Interrupt flag clear register 1 (DMA_INTC1) 516
16.5.5. Channel x control register (DMA_CHxCTL) 516
16.5.6. Channel x counter register (DMA_CHxCNT) 520
16.5.7. Channel x peripheral base address register (DMA_CHxPADDR) 520
16.5.8. Channel x memory 0 base address register (DMA_CHxM0ADDR) 521
16.5.9. Channel x memory 1 base address register (DMA_CHxM1ADDR) 521
16.5.10. Channel x FIFO control register (DMA_CHxFCTL) 522

17. Master direct memory access controller (MDMA) 524

17.1. Overview 524

17.2. Characteristics 524

17.3. Function overview 525
17.3.1. Data process 527
17.3.2. Address generation 530
17.3.3. Transfer modes 531
17.3.4. Transfer status 534
17.3.5. MDMA interrupts and errors 534

17.4. Register definition 537
17.4.1. Global interrupt flag register (MDMA_GINTF) 537
17.4.2. Channel x status register 0 (MDMA_CHxSTAT0) 537
17.4.3. Channel x status clear register (MDMA_CHxSTATC) 538
17.4.4. Channel x status register 1 (MDMA_CHxSTAT1) 539
17.4.5. Channel x control register 0 (MDMA_CHxCTL0) 540
17.4.6. Channel x configure register (MDMA_CHxCFG) 542
17.4.7. Channel x block transfer configure register (MDMA_CHxBTCFG) 546
17.4.8. Channel x source address register (MDMA_CHxSADDR) 546
17.4.9. Channel x destination address register (MDMA_CHxDADDR) 547
17.4.10. Channel x multi-block address update register (MDMA_CHxMBADDRU) 547

17.4.11. Channel x link address register (MDMA_CHxLADDR) ... 548
17.4.12. Channel x control register 1 (MDMA_CHxCTL1) ... 548
17.4.13. Channel x mask address register (MDMA_CHxMADDR) ... 549
17.4.14. Channel x mask data register (MDMA_CHxMDATA) ... 550

18. DMA request multiplexer (DMAMUX) ... 551

18.1. Overview ... 551

18.2. Characteristics ... 551

18.3. Block diagram ... 552

18.4. Signal description ... 552

18.5. Function overview ... 553
18.5.1. DMAMUX request multiplexer ... 553
18.5.2. DMAMUX request generator ... 556
18.5.3. Channel configurations ... 556
18.5.4. Interrupt ... 557
18.5.5. DMAMUX mapping ... 557

18.6. Register definition ... 566
18.6.1. Request multiplexer channel x configuration register (DMAMUX_RM_CHxCFG) ... 566
18.6.2. Request multiplexer channel interrupt flag register (DMAMUX_RM_INTF) ... 567
18.6.3. Request multiplexer channel interrupt flag clear register (DMAMUX_RM_INTC) ... 567
18.6.4. Request generator channel x configuration register (DMAMUX_RG_CHxCFG) ... 568
18.6.5. Request generator channel interrupt flag register (DMAMUX_RG_INTF) ... 569
18.6.6. Rquest generator channel interrupt flag clear register (DMAMUX_RG_INTC) ... 569

19. Debug (DBG) ... 571

19.1. Overview ... 571

19.2. JTAG / SW function overview ... 571
19.2.1. Switch JTAG or SW interface ... 571
19.2.2. Pin assignment ... 571
19.2.3. JTAG ... 572
19.2.4. Debug reset ... 574
19.2.5. JEDEC-106 ID code ... 574

19.3. Debug hold function overview ... 574
19.3.1. Debug support for power saving mode ... 574
19.3.2. Debug support for TIMER, I2C, WWDGT, FWDGT, RTC and CAN ... 574

19.4. Register definition ... 575
19.4.1. ID code register (DBG_ID) ... 575
19.4.2. Control register0 (DBG_CTL0) ... 575
19.4.3. Control register1 (DBG_CTL1) ... 576
19.4.4. Control register2 (DBG_CTL2) ... 577
19.4.5. Control register3 (DBG_CTL3) ... 579

19.4.6. Control register4 (DBG_CTL4) 580

20. Analog-to-digital converter (ADC) 582

20.1. Overview 582

20.2. Characteristics 582

20.3. Pins and internal signals 583

20.4. Function overview 584

20.4.1. Foreground calibration function 584
20.4.2. Dual clock domain architecture 585
20.4.3. ADC enable 585
20.4.4. Single-enden and differential input channels 585
20.4.5. Routine sequence 587
20.4.6. Operation modes 587
20.4.7. Conversion result threshold monitor function 590
20.4.8. Data storage mode 590
20.4.9. Sample time configuration 591
20.4.10. External trigger configuration 591
20.4.11. DMA request 592
20.4.12. Overflow detection 592
20.4.13. ADC internal channels 592
20.4.14. Battery voltage monitoring 594
20.4.15. Using HPDF to managing the conversion results 594
20.4.16. Programmable resolution (DRES) 594
20.4.17. On-chip hardware oversampling 595

20.5. ADC sync mode 598

20.5.1. Free mode 599
20.5.2. Routine parallel mode 599
20.5.3. Routine follow-up mode 600
20.5.4. Use DMA in ADC sync mode 600

20.6. ADC interrupts 601

20.7. Register definition 602

20.7.1. Status register (ADC_STAT) 602
20.7.2. Control register 0 (ADC_CTL0) 603
20.7.3. Control register 1 (ADC_CTL1) 605
20.7.4. Watchdog high threshold register0 (ADC_WDHT0) 608
20.7.5. Watchdog low threshold register0 (ADC_WDLT0) 608
20.7.6. Routine sequence register 0 (ADC_RSQ0) 608
20.7.7. Routine sequence register 1 (ADC_RSQ1) 609
20.7.8. Routine sequence register 2 (ADC_RSQ2) 610
20.7.9. Routine sequence register 3 (ADC_RSQ3) 611
20.7.10. Routine sequence register 4 (ADC_RSQ4) 612
20.7.11. Routine sequence register 5 (ADC_RSQ5) 613

20.7.12. Routine sequence register 6 (ADC_RSQ6) ... 614
20.7.13. Routine sequence register 7 (ADC_RSQ7) ... 615
20.7.14. Routine sequence register 8 (ADC_RSQ8) ... 616
20.7.15. Routine data register (ADC_RDATA) ... 617
20.7.16. Oversample control register (ADC_OVSAMPCTL) ... 617
20.7.17. Watchdog 1 Channel Selection Register (ADC_WD1SR) ... 619
20.7.18. Watchdog 2 Channel Selection Register (ADC_WD2SR) ... 619
20.7.19. Watchdog high threshold register1 (ADC_WDHT1) ... 620
20.7.20. Watchdog low threshold register1 (ADC_WDLT1) ... 620
20.7.21. Watchdog high threshold register2 (ADC_WDHT2) ... 621
20.7.22. Watchdog low threshold register2 (ADC_WDLT2) ... 621
20.7.23. Differential mode control register (ADC_DIFCTL) ... 622
20.7.24. Summary status register (ADC_SSTAT) ... 622
20.7.25. Sync control register (ADC_SYNCCTL) ... 624
20.7.26. Sync routine data register0 (ADC_SYNCDATA0) ... 625
20.7.27. Sync routine data register1 (ADC_SYNCDATA1) ... 626

21. Digital-to-analog converter (DAC) ... 627

21.1. Overview ... 627

21.2. Characteristics ... 627

21.3. Function description ... 629

21.3.1. DAC enable ... 629
21.3.2. DAC output buffer ... 629
21.3.3. DAC data configuration ... 629
21.3.4. DAC trigger ... 629
21.3.5. DAC conversion ... 629
21.3.6. DAC noise wave ... 630
21.3.7. DAC output voltage ... 631
21.3.8. DMA request ... 631
21.3.9. DAC concurrent conversion ... 631
21.3.10. DAC output buffer calibration ... 632
21.3.11. DAC modes ... 633
21.3.12. DAC low-power modes ... 634

21.4. DAC register ... 636

21.4.1. DACx control register 0 (DAC_CTL0) ... 636
21.4.2. DACx software trigger register (DAC_SWT) ... 638
21.4.3. DACx_OUT0 12-bit right-aligned data holding register (DAC_OUT0_R12DH) ... 639
21.4.4. DACx_OUT0 12-bit left-aligned data holding register (DAC_OUT0_L12DH) ... 639
21.4.5. DACx_OUT0 8-bit right-aligned data holding register (DAC_OUT0_R8DH) ... 640
21.4.6. DACx_OUT1 12-bit right-aligned data holding register (DAC_OUT1_R12DH) ... 640
21.4.7. DACx_OUT1 12-bit left-aligned data holding register (DAC_OUT1_L12DH) ... 641
21.4.8. DACx_OUT1 8-bit right-aligned data holding register (DAC_OUT1_R8DH) ... 641
21.4.9. DACx concurrent mode 12-bit right-aligned data holding register (DACC_R12DH) ... 642

21.4.10. DACx concurrent mode 12-bit left-aligned data holding register (DACC_L12DH) 642
21.4.11. DACx concurrent mode 8-bit right-aligned data holding register (DACC_R8DH) 643
21.4.12. DACx_OUT0 data output register (DAC_OUT0_DO) 643
21.4.13. DACx_OUT1 data output register (DAC_OUT1_DO) 644
21.4.14. DACx status register 0 (DAC_STAT0) 644
21.4.15. DACx calibration register (DAC_CALR) 645
21.4.16. DACx mode control register (DAC_MDCR) 646
21.4.17. DACx sample and keep sample time register 0 (DAC_SKSTR0) 647
21.4.18. DACx sample and keep sample time register 1 (DAC_SKSTR1) 647
21.4.19. DACx sample and keep keep time register (DAC_SKKTR) 648
21.4.20. DACx sample and keep refresh time register (DAC_SKRTR) 648

22. Watchdog timer (WDGT) 650

22.1. Free watchdog timer (FWDGT) 650
22.1.1. Overview 650
22.1.2. Characteristics 650
22.1.3. Function overview 650
22.1.4. Register definition 653

22.2. Window watchdog timer (WWDGT) 657
22.2.1. Overview 657
22.2.2. Characteristics 657
22.2.3. Function overview 657
22.2.4. Register definition 660

23. Real time clock (RTC) 662

23.1. Overview 662

23.2. Characteristics 662

23.3. Function overview 663
23.3.1. Block diagram 663
23.3.2. Clock source and prescalers 663
23.3.3. Shadow registers introduction 664
23.3.4. Configurable and field maskable alarm 664
23.3.5. Configurable periodic auto-wakeup counter 665
23.3.6. RTC initialization and configuration 665
23.3.7. Calendar reading 666
23.3.8. Resetting the RTC 668
23.3.9. RTC shift function 668
23.3.10. RTC reference clock detection 669
23.3.11. RTC smooth digital calibration 669
23.3.12. Time-stamp function 671
23.3.13. Tamper detection 671
23.3.14. Calibration clock output 673
23.3.15. Alarm output 673

23.3.16. RTC pin configuration 673
23.3.17. RTC power saving mode management 674
23.3.18. RTC interrupts 675

23.4. Register definition 676
23.4.1. Time register (RTC_TIME) 676
23.4.2. Date register (RTC_DATE) 676
23.4.3. Control register (RTC_CTL) 677
23.4.4. Status register (RTC_STAT) 680
23.4.5. Prescaler register (RTC_PSC) 682
23.4.6. Wakeup timer register (RTC_WUT) 682
23.4.7. Alarm 0 time and date register (RTC_ALRM0TD) 683
23.4.8. Alarm 1 time and date register (RTC_ALRM1TD) 684
23.4.9. Write protection key register (RTC_WPK) 685
23.4.10. Sub second register (RTC_SS) 685
23.4.11. Shift function control register (RTC_SHIFTCTL) 686
23.4.12. Time of time stamp register (RTC_TTS) 687
23.4.13. Date of time stamp register (RTC_DTS) 687
23.4.14. Sub second of time stamp register (RTC_SSTS) 688
23.4.15. High resolution frequency compensation register (RTC_HRFC) 688
23.4.16. Tamper register (RTC_TAMP) 689
23.4.17. Alarm 0 sub second register (RTC_ALRM0SS) 691
23.4.18. Alarm 1 sub second register (RTC_ALRM1SS) 692
23.4.19. Configuration register (RTC_CFG) 693
23.4.20. Backup registers (RTC_BKPx) (x=0..31) 694

24. TIMER (TIMERx) 695

24.1. Advanced timer (TIMERx, x=0, 7) 698
24.1.1. Overview 698
24.1.2. Characteristics 698
24.1.3. Block diagram 699
24.1.4. Function overview 699
24.1.5. Registers definition (TIMERx, x=0, 7) 742

24.2. General level0 timer (TIMERx, x=1,2,3,4,22,23,30,31) 811
24.2.1. Overview 811
24.2.2. Characteristics 811
24.2.3. Block diagram 811
24.2.4. Function overview 812
24.2.5. Registers definition (TIMERx, x=1,2,3,4,22,23,30,31) 838

24.3. General level3 timer (TIMERx, x=14,40,41,42,43,44) 870
24.3.1. Overview 870
24.3.2. Characteristics 870
24.3.3. Block diagram 870
24.3.4. Function overview 871

24.3.5. Register definition (TIMERx, x=14,40,41,42,43,44) 897

24.4. General level4 timer (TIMERx, x=15,16) 931

24.4.1. Overview 931
24.4.2. Characteristics 931
24.4.3. Block diagram 931
24.4.4. Function overview 932
24.4.5. Register definition (TIMERx, x=15,16) 949

24.5. Basic timer (TIMERx, x=5,6,50,51) 975

24.5.1. Overview 975
24.5.2. Characteristics 975
24.5.3. Block diagram 975
24.5.4. Function overview 975
24.5.5. Registers definition (TIMERx, x=5,6,50,51) 979

25. Universal synchronous / asynchronous receiver / transmitter (USART) 987

25.1. Overview 987

25.2. Characteristics 987

25.3. Function overview 989

25.3.1. USART frame format 989
25.3.2. Baud rate generation 990
25.3.3. USART transmitter 991
25.3.4. USART receiver 992
25.3.5. Use DMA for data buffer access 993
25.3.6. Hardware flow control 995
25.3.7. Multi-processor communication 996
25.3.8. LIN mode 997
25.3.9. Synchronous mode 998
25.3.10. IrDA SIR ENDEC mode 999
25.3.11. Half-duplex communication mode 1001
25.3.12. Smartcard (ISO7816-3) mode 1001
25.3.13. ModBus communication 1003
25.3.14. Receive / Transmitter FIFO 1003
25.3.15. Wakeup from deep-sleep mode 1004
25.3.16. USART interrupts 1005

25.4. Register definition 1007

25.4.1. Control register 0 (USART_CTL0) 1007
25.4.2. Control register 1 (USART_CTL1) 1010
25.4.3. Control register 2 (USART_CTL2) 1012
25.4.4. Baud rate generator register (USART_BAUD) 1016
25.4.5. Prescaler and guard time configuration register (USART_GP) 1016
25.4.6. Receiver timeout register (USART_RT) 1017
25.4.7. Command register (USART_CMD) 1018

25.4.8. Status register (USART_STAT) 1019
25.4.9. Interrupt status clear register (USART_INTC) 1024
25.4.10. Receive data register (USART_RDATA) 1025
25.4.11. Transmit data register (USART_TDATA) 1026
25.4.12. USART coherence control register (USART_CHC) 1026
25.4.13. USART FIFO control and status register (USART_FCS) 1027

26. Inter-integrated circuit interface (I2C) 1031

26.1. Overview 1031

26.2. Characteristics 1031

26.3. Function overview 1031

26.3.1. Clock requirements 1032
26.3.2. I2C communication flow 1033
26.3.3. Noise filter 1036
26.3.4. I2C timings configuration 1036
26.3.5. I2C reset 1038
26.3.6. Data transfer 1038
26.3.7. I2C slave mode 1040
26.3.8. I2C master mode 1045
26.3.9. SMBus support 1050
26.3.10. SMBus mode 1053
26.3.11. Wakeup from power saving mode 1054
26.3.12. Use DMA for data transfer 1055
26.3.13. I2C error and interrupts 1055
26.3.14. I2C debug mode 1056

26.4. Register definition 1057

26.4.1. Control register 0 (I2C_CTL0) 1057
26.4.2. Control register 1 (I2C_CTL1) 1059
26.4.3. Slave address register 0 (I2C_SADDR0) 1061
26.4.4. Slave address register 1 (I2C_SADDR1) 1062
26.4.5. Timing register (I2C_TIMING) 1063
26.4.6. Timeout register (I2C_TIMEOUT) 1064
26.4.7. Status register (I2C_STAT) 1065
26.4.8. Status clear register (I2C_STATC) 1068
26.4.9. PEC register (I2C_PEC) 1069
26.4.10. Receive data register (I2C_RDATA) 1069
26.4.11. Transmit data register (I2C_TDATA) 1069
26.4.12. Control register 2 (I2C_CTL2) 1070

27. Serial peripheral interface/Inter-IC sound (SPI/I2S) 1071

27.1. Overview 1071

27.2. Characteristics 1071

27.2.1. SPI characteristics 1071

27.2.2. I2S characteristics 1071

27.3. SPI function overview 1072

27.3.1. SPI block diagram 1072
27.3.2. SPI signal description 1073
27.3.3. SPI clock timing and data format 1074
27.3.4. SPI clock delay mode 1075
27.3.5. RxFIFO and TxFIFO 1077
27.3.6. NSS function 1080
27.3.7. SPI operation modes 1082
27.3.8. DMA function 1091
27.3.9. CRC function 1091
27.3.10. SPI interrupts 1092

27.4. I2S function overview 1095

27.4.1. I2S block diagram 1095
27.4.2. I2S signal description 1096
27.4.3. I2S audio standards 1096
27.4.4. I2S clock 1104
27.4.5. RxFIFO and TxFIFO 1104
27.4.6. Operation 1105
27.4.7. DMA function 1107
27.4.8. I2S interrupts 1107

27.5. Register definition 1110

27.5.1. Control register 0 (SPI_CTL0) 1110
27.5.2. Control register 1 (SPI_CTL1) 1112
27.5.3. Configuration register 0 (SPI_CFG0) 1112
27.5.4. Configuration register 1 (SPI_CFG1) 1115
27.5.5. Interrupt register (SPI_INT) 1117
27.5.6. Status register (SPI_STAT) 1119
27.5.7. Interrupt/Status flags clear register (SPI_STATC) 1121
27.5.8. Data Transfer register (SPI_TDATA) 1122
27.5.9. Data Receive register (SPI_RDATA) 1122
27.5.10. CRC polynomial register (SPI_CRCPOLY) 1123
27.5.11. TX CRC register (SPI_TCRC) 1123
27.5.12. RX CRC register (SPI_RCRC) 1124
27.5.13. Underrun Data register (SPI_URDATA) 1124
27.5.14. I2S control register (SPI_I2SCTL) 1125
27.5.15. Quad_SPI mode control register (SPI_QCTL) 1127
27.5.16. RX clock delay register (SPI_RXDLYCK) 1128

28. OSPI I/O manager(OSPIM) 1129

28.1. Overview 1129

28.2. Characteristics 1129

28.3. Function overview 1129
28.3.1. OSPIM block diagram 1129
28.3.2. OSPIM matrix 1129
28.4. Register definition 1130
28.4.1. Port configuration register (OSPIM_PCFGx) (x = 0, 1) 1130
29. Octal-SPI interface(OSPI) 1132
29.1. Overview 1132
29.2. Characteristics 1132
29.3. Functon overview 1132
29.3.1. OSPI block diagram 1132
29.3.2. OSPI regular command format 1135
29.4. Operating modes 1138
29.4.1. Indirect mode 1138
29.4.2. Status polling mode 1139
29.4.3. Memory map mode 1140
29.5. OSPI configuration 1140
29.5.1. OSPI system configuration 1140
29.5.2. OSPI device configuration 1141
29.5.3. OSPI regular commamd configuration 1141
29.6. Data sampling shift 1142
29.7. Busy 1142
29.8. Error management 1142
29.9. OSPI interrupt 1143
29.10. Register definition 1144
29.10.1. Control register (OSPI_CTL) 1144
29.10.2. Device configuration register 0 (OSPI_DCFG0) 1146
29.10.3. Device configuration register 1 (OSPI_DFCG1) 1147
29.10.4. Status register (OSPI_STAT) 1147
29.10.5. Status clear register (OSPI_STATC) 1148
29.10.6. Data length register (OSPI_DTLEN) 1149
29.10.7. Address register(OSPI_ADDR) 1150
29.10.8. Data register (OSPI_DATA) 1150
29.10.9. Status mask register (OSPI_STATMK) 1151
29.10.10. Status match register(OSPI_STATMATCH) 1151
29.10.11. Interval register (OSPI_INTERVAL) 1152
29.10.12. Transfer configuration register (OSPI_TCFG) 1152
29.10.13. Timing configuration register (OSPI_TIMCFG) 1154
29.10.14. Instruction register (OSPI_INS) 1155
29.10.15. Alternate bytes register (OSPI_ALTE) 1156

29.10.16. Wrap transfer configuration register (OSPI_WPTCFG) 1156
29.10.17. Wrap timing configuration register (OSPI_WPTIMCFG) 1158
29.10.18. Wrap instruction register (OSPI_WPINS) 1159
29.10.19. Wrap alternate byte register (OSPI_WPALTE) 1159
29.10.20. Write transfer configuration register (OSPI_WTCFG) 1160
29.10.21. Write timing configuration register (OSPI_WTIMCFG) 1162
29.10.22. Write instruction register (OSPI_WINS) 1162
29.10.23. Write alternate byte register (OSPI_WALTE) 1163

30. Clock phase delay module (CPDM) 1164

30.1. Overview 1164

30.2. Characteristics 1164

30.3. Function overview 1164

30.3.1. Overview 1165
30.3.2. Operation process 1166

30.4. Register definition 1168

30.4.1. Control register (CPDM_CTL) 1168
30.4.2. Configuration register (CPDM_CFG) 1168

31. Digital camera interface (DCI) 1170

31.1. Overview 1170

31.2. Characteristics 1170

31.3. Block diagram 1170

31.4. Signal description 1171

31.5. Function overview 1171

31.5.1. DCI hardware synchronization mode 1171
31.5.2. Embedded synchronization mode 1172
31.5.3. CCIR656 mode 1172
31.5.4. Capture data using snapshot or continuous capture modes 1175
31.5.5. Window function 1175
31.5.6. Pixel formats, data padding and DMA 1175

31.6. Interrupts 1176

31.7. Register definition 1178

31.7.1. Control register (DCI_CTL) 1178
31.7.2. Status register0 (DCI_STAT0) 1179
31.7.3. Status register1 (DCI_STAT1) 1180
31.7.4. Interrupt enable register (DCI_INTEN) 1181
31.7.5. Interrupt flag register (DCI_INTF) 1182
31.7.6. Interrupt flag clear register (DCI_INTC) 1183
31.7.7. Synchronization codes register (DCI_SC) 1184
31.7.8. Synchronization codes unmask register (DCI_SCUMSK) 1185

31.7.9. Cropping window start position register (DCI_CWSPOS) 1185
31.7.10. Cropping window size register (DCI_CWSZ) 1186
31.7.11. DATA register (DCI_DATA) 1186

32. TFT-LCD interface (TLI) 1187

32.1. Overview 1187

32.2. Characteristics 1187

32.3. Block diagram 1187

32.4. Signal description 1188

32.5. Function overview 1188

32.5.1. LCD display timing 1188
32.5.2. Pixel DMA function 1189
32.5.3. Pixel formats 1190
32.5.4. Layer window and blending function 1190
32.5.5. Layer configuration reload 1191
32.5.6. Dithering function 1192

32.6. Interrupts 1192

32.7. Register definition 1193

32.7.1. Synchronous pulse size register (TLI_SPSZ) 1193
32.7.2. Back-porch size register (TLI_BPSZ) 1193
32.7.3. Active size register (TLI_ASZ) 1194
32.7.4. Total size register (TLI_TSZ) 1194
32.7.5. Control register (TLI_CTL) 1195
32.7.6. Reload layer register (TLI_RL) 1196
32.7.7. Background color register (TLI_BGC) 1197
32.7.8. Interrupt enable register (TLI_INTEN) 1197
32.7.9. Interrupt flag register (TLI_INTF) 1198
32.7.10. Interrupt flag clear register (TLI_INTC) 1198
32.7.11. Line mark register (TLI_LM) 1199
32.7.12. Current pixel position register (TLI_CPPOS) 1199
32.7.13. Status register (TLI_STAT) 1200
32.7.14. Layer x control register (TLI_LxCTL) (x = 0,1) 1200
32.7.15. Layer x horizontal position parameters register (TLI_LxHPOS) (x = 0,1) 1201
32.7.16. Layer x vertical position parameters register (TLI_LxVPOS) (x = 0,1) 1202
32.7.17. Layer x color key register (TLI_LxCKEY) (x = 0,1) 1202
32.7.18. Layer x packeted pixel format register (TLI_LxPPF) (x = 0,1) 1203
32.7.19. Layer x specified alpha register (TLI_LxSA) (x = 0,1) 1203
32.7.20. Layer x default color register (TLI_LxDC) (x = 0,1) 1204
32.7.21. Layer x blending register (TLI_LxBLEND) (x = 0,1) 1204
32.7.22. Layer x frame base address register (TLI_LxFBADDR) (x = 0,1) 1205
32.7.23. Layer x frame line length register (TLI_LxFLLEN) (x = 0,1) 1205
32.7.24. Layer x frame total line number register (TLI_LxFTLN) (x = 0,1) 1206

32.7.25. Layer x look up table register (TLI_LxLUT) (x = 0,1) 1206

33. Receiver of Sony/Philips Digtial Interface (RSPDIF) 1208

33.1. Overview 1208

33.2. Characteristics 1208

33.3. Function overview 1208

33.3.1. RSPDIF block diagram 1208
33.3.2. S/PDIF protocol 1210
33.3.3. RSPDIF 1212
33.3.4. RSPDIF synchronization process 1216
33.3.5. RSPDIF state machine 1218
33.3.6. RSPDIF data reception management 1221
33.3.7. RSPDIF clock management 1224
33.3.8. DMA function 1225
33.3.9. Status、error and interrupt 1226

33.4. Register definition 1231

33.4.1. Control register (RSPDIF_CTL) 1231
33.4.2. Interrupt enable register (RSPDIF_INTEN) 1233
33.4.3. Status register (RSPDIF_STAT) 1234
33.4.4. Status flag clear register (RSPDIF_STATC) 1237
33.4.5. RX data register (RSPDIF_DATA) 1237
33.4.6. RX Channel status register (RSPDIF_CHSTAT) 1240
33.4.7. RX data threshold register (RSPDIF_DTH) 1240

34. Serial Audio Interface (SAI) 1242

34.1. Overview 1242

34.2. Characteristics 1242

34.3. Function overview 1243

34.3.1. Block diagram 1243
34.3.2. Clock divider 1244
34.3.3. Operating mode 1245
34.3.4. SAI synchronization mode 1246
34.3.5. Frame configuration 1247
34.3.6. Slot configuration 1249
34.3.7. Data configuration 1251
34.3.8. Internal FIFO 1251
34.3.9. PDM interface 1252
34.3.10. AC’97 link controller 1259
34.3.11. SPDIF Output 1261
34.3.12. Stereo/Mono 1262
34.3.13. Mute 1262
34.3.14. Compander 1263

34.3.15. Output drive 1266
34.3.16. IO management 1266
34.3.17. DMA interface 1267
34.3.18. Enable/Disable 1267
34.3.19. Error flags 1267
34.3.20. Interrupts 1270

34.4. Register definition 1271
34.4.1. Synchronize configuration register (SAI_SYNCFG) 1271
34.4.2. Block x configuration register0 (SAI_BxCFG0) (x = 0,1) 1271
34.4.3. Block x configuration register1 (SAI_BxCFG1) (x = 0,1) 1274
34.4.4. Block x frame configuration register (SAI_BxFCFG) (x = 0,1) 1276
34.4.5. Block x slot configuration register (SAI_BxSCFG) (x = 0,1) 1277
34.4.6. Block x interrupt enable register (SAI_BxINTEN) (x = 0,1) 1279
34.4.7. Block x status register (SAI_BxSTAT) (x = 0,1) 1280
34.4.8. Block x interrupt flag clear register (SAI_BxINTC) (x = 0,1) 1282
34.4.9. Block x data register (SAI_BxDATA) (x = 0,1) 1283
34.4.10. PDM control register (SAI_PDMCTL) 1284
34.4.11. PDM configuration register (SAI_PDMCFG) 1284

35. Image processing accelerator (IPA) 1287

35.1. Overview 1287

35.2. Characteristics 1287

35.3. Block diagram 1288

35.4. Signal description 1288

35.5. Function overview 1289
35.5.1. Conversion operation 1290
35.5.2. Foreground and background LUT 1291
35.5.3. Foreground and background pixel channel extension (PCE) 1291
35.5.4. Foreground channel scaling 1295
35.5.5. Blending 1296
35.5.6. Destination pixel channel compression (PCC) 1297
35.5.7. Rotation 1298
35.5.8. Inter-timer 1298
35.5.9. Line mark 1299
35.5.10. Transfer flow 1299
35.5.11. Configuration 1300

35.6. Interrupts 1304

35.7. Register definition 1307
35.7.1. Control register (IPA_CTL) 1307
35.7.2. Interrupt flag register (IPA_INTF) 1309
35.7.3. Interrupt flag clear register (IPA_INTC) 1310

35.7.4. Foreground memory base address register (IPA_FMADDR) 1311
35.7.5. Foreground line offset register (IPA_FLOFF) 1311
35.7.6. Background memory base address register (IPA_BMADDR) 1312
35.7.7. Background line offset register (IPA_BLOFF) 1312
35.7.8. Foreground pixel control register (IPA_FPCTL) 1313
35.7.9. Foreground pixel value register (IPA_FPV) 1314
35.7.10. Background pixel control register (IPA_BPCTL) 1315
35.7.11. Background pixel value register (IPA_BPV) 1317
35.7.12. Foreground LUT memory base address register (IPA_FLMADDR) 1317
35.7.13. Background LUT memory base address register (IPA_BLMADDR) 1318
35.7.14. Destination pixel control register (IPA_DPCTL) 1318
35.7.15. Destination pixel value register (IPA_DPV) 1319
35.7.16. Destination memory base address register (IPA_DMADDR) 1323
35.7.17. Destination line offset register (IPA_DLOFF) 1323
35.7.18. Image size register (IPA_IMS) 1324
35.7.19. Line mark register (IPA_LM) 1325
35.7.20. Inter-timer control register (IPA_ITCTL) 1325
35.7.21. Bilinear scaling control register (IPA_BSCTL) 1326
35.7.22. Scaling destination image size register (IPA_DIMS) 1326
35.7.23. Foreground even frame/UV memory base address register (IPA_EF_UV_MADDR) 1327
35.7.24. Color space conversion coefficient configure register 0 (IPA_CSCC_CFG0) 1328
35.7.25. Color space conversion coefficient configure register 1 (IPA_CSCC_CFG1) 1328
35.7.26. Color space conversion coefficient configure register 2 (IPA_CSCC_CFG2) 1329

36. Secure digital input/output interface (SDIO) 1330

36.1. Overview 1330

36.2. Characteristics 1330

36.3. SDIO function overview 1331

36.3.1. SDIO bus topology 1331
36.3.2. SDIO operation modes 1333
36.3.3. Block diagram 1334
36.3.4. SDIO pins and internal signals 1334
36.3.5. General description 1335
36.3.6. SDIO adapter 1336
36.3.7. AHB slave interface 1341
36.3.8. AHB master interface 1342
36.3.9. MDMA request 1343
36.3.10. AHB and SDIO_CLK clock relation 1344
36.3.11. Hardware flow control 1344

36.4. Card function overview 1345

36.4.1. Card registers 1345
36.4.2. Commands 1346
36.4.3. Responses 1359

36.4.4. Data packets format 1362
36.4.5. Two status fields of the card 1364

36.5. Programming sequence 1372
36.5.1. Card identification 1372
36.5.2. Boot operation 1373
36.5.3. No data commands 1376
36.5.4. Single block or multiple block write 1376
36.5.5. Single block or multiple block read 1377
36.5.6. Stream write and stream read (e•MMC only) 1378
36.5.7. Erase 1380
36.5.8. Bus width selection 1381
36.5.9. Protection management 1381
36.5.10. Card Lock/Unlock operation 1382
36.5.11. Sleep 1384
36.5.12. CMD12 send timing 1385

36.6. Specific operations 1387
36.6.1. UHS-I 1387

36.7. Register definition 1390
36.7.1. Power control register (SDIO_PWRCTL) 1390
36.7.2. Clock control register (SDIO_CLKCTL) 1391
36.7.3. Command argument register (SDIO_CMDAGMT) 1393
36.7.4. Command control register (SDIO_CMDCTL) 1393
36.7.5. Command index response register (SDIO_RSPCMDIDX) 1395
36.7.6. Response register (SDIO_RESPx x = 0..3) 1396
36.7.7. Data timeout register (SDIO_DATATO) 1396
36.7.8. Data length register (SDIO_DATALEN) 1397
36.7.9. Data control register (SDIO_DATACTL) 1397
36.7.10. Data counter register (SDIO_DATACNT) 1399
36.7.11. Status register (SDIO_STAT) 1400
36.7.12. Interrupt clear register (SDIO_INTC) 1401
36.7.13. Interrupt enable register (SDIO_INTEN) 1403
36.7.14. ACK timeout register (SDIO_ACKTO) 1405
36.7.15. FIFO data register (SDIO_FIFO) 1405
36.7.16. IDMA control register (SDIO_IDMACTL) 1406
36.7.17. IDMA buffer size register (SDIO_IDMASIZE) 1407
36.7.18. IDMA buffer 0 base address register (SDIO_IDMAADDR0) 1407
36.7.19. IDMA buffer 1 base address register (SDIO_IDMAADDR1) 1408

37. Management data input / output (MDIO) 1409

37.1. Overview 1409

37.2. Characteristics 1409

37.3. Pins and internal signals 1409

37.4. Function overview 1410
37.4.1. Frame structure 1410
37.4.2. Typical Usage Sequence 1412
37.5. Register definition 1414
37.5.1. Control register (MDIO_CTL) 1414
37.5.2. Received frame information register (MDIO_RFRM) 1414
37.5.3. Received data register (MDIO_RDATA) 1415
37.5.4. Received address register (MDIO_RADDR) 1415
37.5.5. Transfer data register (MDIO_TDATA) 1416
37.5.6. Configuration register (MDIO_CFG) 1416
37.5.7. Status register (MDIO_STAT) 1417
37.5.8. Interrupt enable register (MDIO_INTEN) 1418
37.5.9. Pin value register (MDIO_PIN) 1419
37.5.10. Timeout register (MDIO_TO) 1419
38. External memory controller (EXMC) 1421
38.1. Overview 1421
38.2. Characteristics 1421
38.3. Function overview 1421
38.3.1. Block diagram 1421
38.3.2. Bus interface 1422
38.3.3. AXI error 1422
38.3.4. Basic regulation of EXMC access 1423
38.3.5. External device address mapping 1424
38.3.6. NOR/PSRAM controller 1428
38.3.7. NAND flash controller 1448
38.3.8. SDRAM controller 1452
38.4. Register definition 1464
38.4.1. NOR/PSRAM controller registers 1464
38.4.2. NAND flash controller registers 1469
38.4.3. SDRAM controller registers 1474
39. VREF 1482
39.1. Overview 1482
39.2. Characteristics 1482
39.3. Function overview 1482
39.4. Register definition 1484
39.4.1. Control and status register (VREF_CS) 1484
39.4.2. Calibration register (VREF_CALIB) 1484
40. Low power digital temperature sensor (LPDTS) 1486
40.1. Overview 1486

40.2. Characteristics 1486

40.3. Block diagram 1486

40.4. Function overview 1487

40.4.1. LPDTS internal signals 1487
40.4.2. Operating modes 1487
40.4.3. Temperature measurement principles 1487
40.4.4. Sampling time 1488
40.4.5. Trigger input 1489
40.4.6. On-off control and ready flag 1490
40.4.7. LPDTS low-power modes 1490
40.4.8. LPDTS interrupts 1490

40.5. Register definition 1492

40.5.1. Configuration register (LPDTS_CFG) 1492
40.5.2. Sensor T0 data register 1 (LPDTS_SDATA) 1493
40.5.3. Ramp data register (LPDTS_RDATA) 1493
40.5.4. Interrupt threshold register (LPDTS_IT) 1494
40.5.5. Temperature data register (LPDTS_DATA) 1494
40.5.6. Temperature sensor status register (LPDTS_STAT) 1495
40.5.7. Interrupt enable register (LPDTS_INTEN) 1496
40.5.8. Interrupt clear flag register (LPDTS_INTC) 1497
40.5.9. Option register (LPDTS_OP) 1498

41. Encoder Divided-Output controller (EDOUT) 1499

41.1. Overview 1499

41.2. Characteristics 1499

41.3. Function overview 1499

41.4. Z-phase output mode 1500

41.5. Operation guidance 1501

41.5.1. EDOUT initialization 1501
41.5.2. EDOUT update processing 1502
41.5.3. EDOUT working example 1502

41.6. Register definition 1504

41.6.1. Control register (EDOUT_CTL) 1504
41.6.2. Enable register (EDOUT_ENABLE) 1504
41.6.3. Location register (EDOUT_LOC) 1505
41.6.4. Output counter register (EDOUT_OCNT) 1505
41.6.5. Location counter register (EDOUT_LCNT) 1506
41.6.6. Z-phase configure register (EDOUT_ZCR) 1507

42. Controller area network (CAN) 1508

42.1. Overview 1508

42.2. Characteristics 1508

42.3. Function overview 1509

42.3.1. Mailbox descriptor 1510
42.3.2. Rx FIFO descriptor 1515
42.3.3. Communication modes 1521
42.3.4. Power saving modes 1522
42.3.5. Data transmission 1523
42.3.6. Data reception 1527
42.3.7. Data reception in Pretended Networking mode 1535
42.3.8. CAN FD operation 1537
42.3.9. Errors and states 1540
42.3.10. Communication parameters 1543
42.3.11. Interrupts 1546

42.4. Example for a typical configuration flow of CAN 1546

42.5. CAN registers 1549

42.5.1. Control register 0 (CAN_CTL0) 1549
42.5.2. Control register 1 (CAN_CTL1) 1551
42.5.3. Timer register (CAN_TIMER) 1553
42.5.4. Receive mailbox public filter register (CAN_RMPUBF) 1553
42.5.5. Error register 0 (CAN_ERR0) 1554
42.5.6. Error register 1 (CAN_ERR1) 1554
42.5.7. Interrupt enable register (CAN_INTEN) 1557
42.5.8. Status register (CAN_STAT) 1558
42.5.9. Control register 2 (CAN_CTL2) 1559
42.5.10. CRC for classical frame register (CAN_CRCC) 1561
42.5.11. Receive FIFO public filter register (CAN_RFIFOPUBF) 1562
42.5.12. Receive FIFO identifier filter matching number register (CAN_RFIFOIFMN) 1563
42.5.13. Bit timing register (CAN_BT) 1563
42.5.14. Receive FIFO/mailbox private filter x register (CAN_RFIFOMPFx)(x=0..31) 1564
42.5.15. Pretended Networking mode control register 0 (CAN_PN_CTL0) 1564
42.5.16. Pretended Networking mode timeout register (CAN_PN_TO) 1566
42.5.17. Pretended Networking mode status register (CAN_PN_STAT) 1566
42.5.18. Pretended Networking mode expected identifier 0 register (CAN_PN_EID0) 1567
42.5.19. Pretended Networking mode expected DLC register (CAN_PN_EDLC) 1568
42.5.20. Pretended Networking mode expected data low 0 register (CAN_PN_EDL0) 1568
42.5.21. Pretended Networking mode expected data low 1 register (CAN_PN_EDL1) 1569
42.5.22. Pretended Networking mode identifier filter / expected identifier 1 register (CAN_PN_IFEID1) 1570
42.5.23. Pretended Networking mode data 0 filter / expected data high 0 register (CAN_PN_DF0EDH0) 1571
42.5.24. Pretended Networking mode data 1 filter / expected data high 1 register (CAN_PN_DF1EDH1) 1571
42.5.25. Pretended Networking mode received wakeup mailbox x control status information register

(CAN_PN_RWMxCS)(x=0..3) 1572
42.5.26. Pretended Networking mode received wakeup mailbox x identifier register (CAN_PN_RWMxI)(x=0..3) 1573
42.5.27. Pretended Networking mode received wakeup mailbox x data 0 register (CAN_PN_RWMxD0)(x=0..3) 1573
42.5.28. Pretended Networking mode received wakeup mailbox x data 1 register (CAN_PN_RWMxD1)(x=0..3) 1574
42.5.29. FD control register (CAN_FDCTL) 1574
42.5.30. FD bit timing register (CAN_FDBT) 1576
42.5.31. CRC for classical and FD frame register (CAN_CRCCFD) 1576

43. Ethernet (ENET) 1578

43.1. Overview 1578

43.2. Characteristics 1578
43.2.1. Block diagram 1579
43.2.2. MAC 802.3 Ethernet packet description 1581
43.2.3. Ethernet signal description 1581

43.3. Function overview 1583
43.3.1. Interface configuration 1583
43.3.2. MAC function overview 1587
43.3.3. DMA controller description 1598
43.3.4. MAC statistics counters: MSC 1623
43.3.5. Wake up management: WUM 1624
43.3.6. Precision time protocol: PTP 1627
43.3.7. Example for a typical configuration flow of Ethernet 1631
43.3.8. Ethernet interrupts 1633

43.4. Register definition 1635
43.4.1. MAC configuration register (ENET_MAC_CFG) 1635
43.4.2. MAC frame filter register (ENET_MAC_FRMF) 1637
43.4.3. MAC hash list high register (ENET_MAC_HLH) 1639
43.4.4. MAC hash list low register (ENET_MAC_HLL) 1640
43.4.5. MAC PHY control register (ENET_MAC_PHY_CTL) 1640
43.4.6. MAC PHY data register (ENET_MAC_PHY_DATA) 1641
43.4.7. MAC flow control register (ENET_MAC_FCTL) 1641
43.4.8. MAC VLAN tag register (ENET_MAC_VLT) 1643
43.4.9. MAC remote wakeup frame filter register (ENET_MAC_RWFF) 1644
43.4.10. MAC wakeup management register (ENET_MAC_WUM) 1644
43.4.11. MAC debug register (ENET_MAC_DBG) 1645
43.4.12. MAC interrupt flag register (ENET_MAC_INTF) 1647
43.4.13. MAC interrupt mask register (ENET_MAC_INTMSK) 1648
43.4.14. MAC address 0 high register (ENET_MAC_ADDR0H) 1649
43.4.15. MAC address 0 low register (ENET_MAC_ADDR0L) 1649
43.4.16. MAC address 1 high register (ENET_MAC_ADDR1H) 1650

43.4.17. MAC address 1 low register (ENET_MAC_ADDR1L) 1651
43.4.18. MAC address 2 high register (ENET_MAC_ADDR2H) 1651
43.4.19. MAC address 2 low register (ENET_MAC_ADDR2L) 1652
43.4.20. MAC address 3 high register (ENET_MAC_ADDR3H) 1652
43.4.21. MAC address 3 low register (ENET_MAC_ADDR3L) 1653
43.4.22. MAC flow control threshold register (ENET_MAC_FCTH) 1653
43.4.23. MSC control register (ENET_MSC_CTL) 1654
43.4.24. MSC receive interrupt flag register (ENET_MSC_RINTF) 1655
43.4.25. MSC transmit interrupt flag register (ENET_MSC_TINTF) 1656
43.4.26. MSC receive interrupt mask register (ENET_MSC_RINTMSK) 1657
43.4.27. MSC transmit interrupt mask register (ENET_MSC_TINTMSK) 1658
43.4.28. MSC transmitted good frames after a single collision counter register (ENET_MSC_SCCNT) 1658
43.4.29. MSC transmitted good frames after more than a single collision counter register (ENET_MSC_MSCCNT) 1659
43.4.30. MSC transmitted good frames counter register (ENET_MSC_TGFCNT) 1659
43.4.31. MSC received frames with CRC error counter register (ENET_MSC_RFCECNT) 1660
43.4.32. MSC received frames with alignment error counter register (ENET_MSC_RFAECNT) .. 1660
43.4.33. MSC received good unicast frames counter register (ENET_MSC_RGUFCNT) 1661
43.4.34. PTP time stamp control register (ENET_PTP_TSCTL) 1661
43.4.35. PTP subsecond increment register (ENET_PTP_SSINC) 1664
43.4.36. PTP time stamp high register (ENET_PTP_TSH) 1664
43.4.37. PTP time stamp low register (ENET_PTP_TSL) 1665
43.4.38. PTP time stamp update high register (ENET_PTP_TSUH) 1665
43.4.39. PTP time stamp update low register (ENET_PTP_TSUL) 1666
43.4.40. PTP time stamp addend register (ENET_PTP_TSADDEND) 1666
43.4.41. PTP expected time high register (ENET_PTP_ETH) 1667
43.4.42. PTP expected time low register (ENET_PTP_ETL) 1667
43.4.43. PTP time stamp flag register (ENET_PTP_TSF) 1667
43.4.44. PTP PPS control register (ENET_PTP_PPSCTL) 1668
43.4.45. DMA bus control register (ENET_DMA_BCTL) 1669
43.4.46. DMA transmit poll enable register (ENET_DMA_TPEN) 1671
43.4.47. DMA receive poll enable register (ENET_DMA_RPEN) 1671
43.4.48. DMA receive descriptor table address register (ENET_DMA_RDTADDR) 1672
43.4.49. DMA transmit descriptor table address register (ENET_DMA_TDTADDR) 1672
43.4.50. DMA status register (ENET_DMA_STAT) 1673
43.4.51. DMA control register (ENET_DMA_CTL) 1676
43.4.52. DMA interrupt enable register (ENET_DMA_INTEN) 1679
43.4.53. DMA missed frame and buffer overflow counter register (ENET_DMA_MFBOCNT) 1681
43.4.54. DMA receive state watchdog counter register (ENET_DMA_RSWDC) 1682
43.4.55. DMA current transmit descriptor address register (ENET_DMA_CTDADDR) 1683
43.4.56. DMA current receive descriptor address register (ENET_DMA_CRDADDR) 1683
43.4.57. DMA current transmit buffer address register (ENET_DMA_CTBADDR) 1684
43.4.58. DMA current receive buffer address register (ENET_DMA_CRBADDR) 1684

44. Comparator (CMP) 1685

44.1. Overview 1685

44.2. Characteristic 1685

44.3. Function overview 1685

44.3.1. CMP clock 1686
44.3.2. CMP I/O configuration 1686
44.3.3. CMP operating mode 1687
44.3.4. CMP Window mode 1688
44.3.5. CMP hysteresis 1688
44.3.6. CMP register write protection 1688
44.3.7. CMP output blanking 1688
44.3.8. CMP voltage scaler function 1689
44.3.9. CMP interrupt 1689

44.4. Register definition 1690

44.4.1. CMP status register (CMP_STAT) 1690
44.4.2. CMP interrupt flag clear register (CMP_IFC) 1691
44.4.3. CMP alternate select register (CMP_SR) 1691
44.4.4. CMP0 control/status register (CMP0_CS) 1692
44.4.5. CMP1 control/status register (CMP1_CS) 1694

45. High-Performance Digital Filter (HPDF) 1697

45.1. Overview 1697

45.2. Characteristics 1697

45.3. Function overview 1698

45.3.1. HPDF Block Diagram 1698
45.3.2. HPDF on-off control 1699
45.3.3. HPDF clock 1699
45.3.4. Multiplex serial data channel 1700
45.3.5. Parallel data input 1708
45.3.6. Regular group conversion 1710
45.3.7. Inserted group conversion 1711
45.3.8. Digital filter 1713
45.3.9. Integrator 1713
45.3.10. Threshold monitor 1714
45.3.11. Malfunction monitor 1716
45.3.12. Extremes monitor 1717
45.3.13. Data unit 1717
45.3.14. HPDF interrupt 1719

45.4. Register definition 1720

45.4.1. HPDF channel x registers (x=0, 7) 1720
45.4.2. HPDF filter y registers (y=0, 3) 1725

46. Real-time decryption (RTDEC) 1740

46.1. Overview 1740

46.2. Characteristics 1740

46.3. Function overview 1740

46.3.1. RTDEC real-time decryption introduction 1741
46.3.2. RTDEC real-time decryption introduction 1741
46.3.3. Decryption with AES-128 in counter mode 1742
46.3.4. RTDEC configuration 1743
46.3.5. RTDEC error management 1745

46.4. RTDEC interrupts 1746

46.5. Registers definition 1747

46.5.1. Area x configuration register (RTDEC_AREx_CFG) 1747
46.5.2. Area x start address register (RTDEC_AREx_SADDR) 1748
46.5.3. Area x end address register (RTDEC_AREx_EADDR) 1749
46.5.4. Area x nonce register 0 (RTDEC_AREx_NONCE0) 1749
46.5.5. Area x nonce register 1 (RTDEC_AREx_NONCE1) 1750
46.5.6. Area x key register 0 (RTDEC_AREx_KEY0) 1750
46.5.7. Area x key register 1 (RTDEC_AREx_KEY1) 1751
46.5.8. Area x key register 2 (RTDEC_AREx_KEY2) 1751
46.5.9. Area x key register 3 (RTDEC_AREx_KEY3) 1751
46.5.10. Interrupt flag register (RTDEC_INTF) 1752
46.5.11. Interrupt flag clear register (RTDEC_INTC) 1753
46.5.12. Interrupt enable register (RTDEC_INTEN) 1753

47. Filter arithmetic accelerator (FAC) 1755

47.1. Overview 1755

47.2. Characteristics 1755

47.3. Function overview 1755

47.3.1. General description 1755
47.3.2. Local memory and buffers 1756
47.3.3. Input buffers 1757
47.3.4. Output buffer 1759
47.3.5. Initialization functions 1760
47.3.6. Filter functions 1761
47.3.7. Fixed point data format 1763
47.3.8. Float point data format 1764
47.3.9. FIR filters 1764
47.3.10. IIR filters 1766

47.4. Register definition 1768

47.4.1. FAC X0 buffer configure register (FAC_X0BCFG) 1768
47.4.2. FAC X1 buffer configure register (FAC_X1BCFG) 1768

47.4.3. FAC Y buffer configure register (FAC_YBCFG) ... 1769
47.4.4. FAC Parameter configure register (FAC_PARACFG) ... 1770
47.4.5. FAC Control register (FAC_CTL) ... 1770
47.4.6. FAC Status register (FAC_STAT) ... 1772
47.4.7. FAC write data register (FAC_WDATA) ... 1773
47.4.8. FAC read data register (FAC_RDATA) ... 1774

48. Hardware semaphore (HWSEM) ... 1775

48.1. Overview ... 1775

48.2. Characteristics ... 1775

48.3. Function overview ... 1775

48.3.1. Block diagram ... 1775
48.3.2. Semaphore x ... 1776
48.3.3. Lock a semaphore ... 1776
48.3.4. Unlock a semaphore ... 1777
48.3.5. Unlock all semaphores ... 1778
48.3.6. Interrupts ... 1778

48.4. Register definition ... 1780

48.4.1. Control register (HWSEM_CTLx)(x = 0…31) ... 1780
48.4.2. Read lock register (HWSEM_RLKx)(x = 0...31) ... 1780
48.4.3. Interrupt enable register (HWSEM_INTEN) ... 1781
48.4.4. Interrupt flag clear register (HWSEM_INTC) ... 1782
48.4.5. Status register (HWSEM_STAT) ... 1782
48.4.6. Interrupt flag register (HWSEM_INTF) ... 1782
48.4.7. Unlock register (HWSEM_UNLK) ... 1783
48.4.8. Key register (HWSEM_KEY) ... 1784

49. Universal serial bus High-Speed interface (USBHS) ... 1785

49.1. Overview ... 1785

49.2. Characteristics ... 1785

49.3. Block diagram ... 1786

49.4. Signal description ... 1786

49.5. Function overview ... 1787

49.5.1. USBHS PHY selection, clocks and working modes ... 1787
49.5.2. USB host function ... 1790
49.5.3. USB device function ... 1792
49.5.4. OTG function overview ... 1794
49.5.5. Data FIFO ... 1795
49.5.6. DMA function ... 1798
49.5.7. Operation guide ... 1799

49.6. Interrupts ... 1805

49.7. Register definition 1808
49.7.1. USBHS global registers 1808
49.7.2. Host control and status registers 1837
49.7.3. Device control and status registers 1851
49.7.4. Power and clock control register (USBHS_PWRCLKCTL) 1880
50. Appendix 1882
50.1. List of abbreviations used in register 1882
50.2. List of terms 1882
50.3. Available peripherals 1883
51. Revision history 1884

List of Figures

Figure 1-1. The structure of the Cortex®-M7 processor 60
Figure 1-2. The system architecture of GD32H7xx devices 62
Figure 1-3. Bus matrix Region 0 63
Figure 1-4. Bus matrix Region 1 64
Figure 1-5. Bus matrix Region 2 64
Figure 1-6. Block digram of AXI SRAM controller 73
Figure 1-7. Block digram of RAM shared by ITCM/DTCM/AXI SRAM 74
Figure 1-8. Block diagram of AXI interconnect matrix 77
Figure 2-1. Block architecture of RAMECCMU 129
Figure 3-1. FMC block diagram 136
Figure 3-2. Proccess of sector erase operation 139
Figure 3-3. Process of typical mass erase operation 141
Figure 3-4. Process of protection-removed mass erase operation 142
Figure 3-5. Proccess of program operation 144
Figure 3-6. Memory architecture in standard mode and secure mode 155
Figure 4-1. Block diagram of efuse controller 179
Figure 4-2 EFUSE interrupt mapping diagram 185
Figure 5-1. Power supply overview 198
Figure 5-2. Waveform of the Backup domain voltage thresholds 200
Figure 5-3. Waveform of the POR / PDR 201
Figure 5-4. Waveform of the BOR 202
Figure 5-5. Waveform of the LVD threshold 202
Figure 5-6. Waveform of the VAVD threshold 203
Figure 5-7. Temperature thresholds 204
Figure 5-8. LDO supplies for 0.9V power domain 205
Figure 5-9. SMPS supplies for 0.9V power domain 206
Figure 5-10. SMPS supplies for LDO, LDO supplies for 0.9V power domain 206
Figure 5-11. SMPS supplies for LDO and external, LDO supplies for 0.9V power domain 207
Figure 5-12. SMPS supplies for external, external supplies for 0.9V power domain 207
Figure 5-13. Bypass 208
Figure 5-14. Waveform of the VOVD 209
Figure 6-1. The system reset circuit 222
Figure 6-2. Clock tree 223
Figure 6-3. HXTAL clock source 226
Figure 6-4. HXTAL clock source in bypass mode 227
Figure 7-1. CTC overview 318
Figure 7-2. CTC trim counter 319
Figure 8-1. Block diagram of EXTI 335
Figure 9-1. TRIGSEL main composition example 345

Figure 10-1. Basic structure of a standard I/O port bit 391
Figure 10-2. Input configuration 392
Figure 10-3. Output configuration 393
Figure 10-4. Analog configuration 394
Figure 10-5. Alternate function configuration 394
Figure 10-6. Analog configuration for ADC 395
Figure 10-7. Filtering using the sampling window 397
Figure 10-8. Input filtering clock cycle 398
Figure 11-1. Block diagram of CRC calculation unit 415
Figure 12-1. TRNG block diagram 420
Figure 13-1. DATAM No swapping and Half-word swapping 432
Figure 13-2. DATAM Byte swapping and Bit swapping 433
Figure 13-3. CAU diagram 434
Figure 13-4. DES / TDES ECB encryption 435
Figure 13-5. DES / TDES ECB decryption 436
Figure 13-6. DES / TDES CBC encryption 437
Figure 13-7. DES / TDES CBC decryption 438
Figure 13-8. AES ECB encryption 439
Figure 13-9. AES ECB decryption 440
Figure 13-10. AES CBC encryption 441
Figure 13-11. AES CBC decryption 442
Figure 13-12. Counter block structure 442
Figure 13-13. AES CTR encryption/decryption 443
Figure 14-1. DATAM No swapping and Half-word swapping 463
Figure 14-2. DATAM Byte swapping and Bit swapping 463
Figure 14-3. HAU block diagram 464
Figure 15-1. TMU block diagram 477
Figure 16-1. Block diagram of DMA 496
Figure 16-2. Data stream for three transfer modes 497
Figure 16-3. Handshake mechanism 498
Figure 16-4. Data packing/unpacking when PWIDTH = ‘00’ 502
Figure 16-5. Data packing/unpacking when PWIDTH = ‘01’ 503
Figure 16-6. Data packing/unpacking when PWIDTH = ‘10’ 503
Figure 16-7. DMA operation of switch-buffer mode 505
Figure 16-8. System connection of DMA0 and DMA1 512
Figure 17-1. Block diagram of MDMA 525
Figure 17-2. Connections of the four modes 526
Figure 17-3. Word, halfword, byte order exchange 528
Figure 17-4. Data padding and alignment (source greater than destination) 529
Figure 17-5. Data padding and alignment (source less than destination) 529
Figure 17-6. Data packing / unpacking 530
Figure 17-7. MDMA interrupt logic 536
Figure 18-1. Block diagram of DMAMUX 552
Figure 18-2. Synchronization mode 554

Figure 18-3. Event generation ... 555
Figure 19-1. Block diagram of JTAG unit ... 572
Figure 20-1. ADC module block diagram ... 584
Figure 20-2. Single operation mode ... 587
Figure 20-3. Continuous operation mode ... 588
Figure 20-4. Scan operation mode, continuous disable ... 589
Figure 20-5. Scan operation mode, continuous enable ... 589
Figure 20-6. Discontinuous operation mode ... 589
Figure 20-7. 14-bit Data storage mode ... 591
Figure 20-8. 12-bit Data storage mode ... 591
Figure 20-9. 6-bit data storage mode ... 591
Figure 20-10. Schematic diagram of handshake signal between HPDF and ADC module 594
Figure 20-11. 20-bit to 16-bit result truncation (for 12bit ADC) ... 596
Figure 20-12. Numerical example with 5-bits shift and rounding (for 12bit ADC) ... 596
Figure 20-13. 14bit ADC oversampling with 10bits right shift ... 597
Figure 20-14. Numerical example for 14bit ADC oversampling with 10bits right shift ... 597
Figure 20-15. ADC sync block diagram ... 599
Figure 20-16. Routine parallel mode on 16 channels ... 599
Figure 20-17. Routine follow-up mode on 1 channel in continuous operation mode ... 600
Figure 21-1. DAC block diagram ... 628
Figure 21-2. DAC LFSR algorithm ... 630
Figure 21-3. DAC triangle noise wave ... 631
Figure 21-4. DAC sample and keep ... 634
Figure 22-1. Free watchdog block diagram ... 651
Figure 22-2. Window watchdog timer block diagram ... 657
Figure 22-3. Window watchdog timing diagram ... 658
Figure 23-1. Block diagram of RTC ... 663
Figure 24-1. Advanced timer block diagram ... 699
Figure 24-2. Normal mode, internal clock divided by 1 ... 700
Figure 24-3. Counter timing diagram with prescaler division change from 1 to 2 ... 701
Figure 24-4. Timing diagram of up counting mode, PSC=0/2 ... 702
Figure 24-5. Timing diagram of up counting mode, change TIMERx_CAR ongoing ... 703
Figure 24-6. Timing diagram of down counting mode, PSC=0/2 ... 704
Figure 24-7. Timing diagram of down counting mode, change TIMERx_CAR ongoing ... 704
Figure 24-8. Timing diagram of center-aligned counting mode ... 706
Figure 24-9. Repetition counter timing diagram of center-aligned counting mode ... 707
Figure 24-10. Repetition counter timing diagram of up counting mode ... 707
Figure 24-11. Repetition counter timing diagram of down counting mode ... 708
Figure 24-12. Input capture logic for channel 0 ... 709
Figure 24-13. Input capture logic for multi mode channel 0 ... 709
Figure 24-14. Output compare logic (when MCHxMSEL = 2’00, x=0, 1, 2, 3) ... 711
Figure 24-15. Output compare logic (when MCHxMSEL = 2’11, x=0,1,2,3) ... 711
Figure 24-16. Output-compare in three modes ... 713
Figure 24-17. Timing diagram of EAPWM ... 714

Figure 24-18. Timing diagram of CAPWM 714
Figure 24-19. Channel x output PWM with (CHxVAL < CHxCOMVAL_ADD) 716
Figure 24-20. Channel x output PWM with (CHxVAL = CHxCOMVAL_ADD) 716
Figure 24-21. Channel x output PWM with (CHxVAL > CHxCOMVAL_ADD) 716
Figure 24-22. Channel x output PWM with CHxVAL or CHxCOMVAL_ADD exceeds CARL 717
Figure 24-23. Channel x output PWM duty cycle changing with CHxCOMVAL_ADD 717
Figure 24-24. Four Channels outputs in Composite PWM mode 718
Figure 24-25. CHx_O output with a pulse in edge-aligned mode (CHxOMPSEL≠2'b00) ... 719
Figure 24-26. CHx_O output with a pulse in center-aligned mode (CHxOMPSEL≠2'b00) 719
Figure 24-27. Complementary output with dead time insertion 722
Figure 24-28. BREAK0 function logic diagram 723
Figure 24-29. BREAK1 function logic diagram 724
Figure 24-30. Output behavior of the channel in response to BREAK0 (the break input high active and IOS=1) 724
Figure 24-31. Output behavior of the channel outputs with the BREAK0 and BREAK1 ... 725
Figure 24-32. BRKINx (x=0...2) pins logic with BREAK0 function 727
Figure 24-33. Example of counter operation in decoder interface mode 728
Figure 24-34. Example of decoder interface mode with CI0FE0 polarity inverted 728
Figure 24-35. Quadrature decoder signal disconnection detection block diagram 729
Figure 24-36. Example of counter operation in non-quadrature decoder mode 0 with CH1P=0 729
Figure 24-37. Example of counter operation in non-quadrature decoder mode 1 with CH0P=0 730
Figure 24-38. Hall sensor is used for BLDC motor 731
Figure 24-39. Hall sensor timing between two timers 732
Figure 24-40. Restart mode 733
Figure 24-41. Pause mode 734
Figure 24-42. Event mode 734
Figure 24-43. Single pulse mode TIMERx_CHxCV=0x04, TIMERx_CAR=0x60 735
Figure 24-44. delayable single pulse mode with TIMERx_CHxCV=0x00, TIMERx_CAR=0x60 736
Figure 24-45. Trigger mode of TIMER0 controlled by enable signal of TIMER2 737
Figure 24-46. Trigger mode of TIMER0 controlled by update signal of TIMER2 738
Figure 24-47. Pause mode of TIMER0 controlled by enable signal of TIMER2 738
Figure 24-48. Pause mode of TIMER0 controlled by O0CPRE signal of TIMER2 739
Figure 24-49. Trigger TIMER0 and TIMER2 by the CI0 signal of TIMER2 740
Figure 24-50. General Level 0 timer block diagram 812
Figure 24-51. Normal mode, internal clock divided by 1 813
Figure 24-52. Counter timing diagram with prescaler division change from 1 to 2 814
Figure 24-53. Timing chart of up counting mode, PSC=0/2 815
Figure 24-54. Timing chart of up counting, change TIMERx_CAR ongoing 815
Figure 24-55. Timing chart of down counting mode, PSC=0/2 816
Figure 24-56. Timing chart of down counting mode, change TIMERx_CAR ongoing 817

Figure 24-57. Timing chart of center-aligned counting mode 818
Figure 24-58. Input capture logic 819
Figure 24-59. Output compare logic (x=0,1,2,3) 820
Figure 24-60. Output-compare under three modes 821
Figure 24-61. Timing chart of EAPWM 822
Figure 24-62. Timing chart of CAPWM 822
Figure 24-63. Channel x output PWM with (CHxVAL < CHxCOMVAL_ADD) 824
Figure 24-64. Channel x output PWM with (CHxVAL = CHxCOMVAL_ADD) 824
Figure 24-65. Channel x output PWM with (CHxVAL > CHxCOMVAL_ADD) 824
Figure 24-66. Channel x output PWM with CHxVAL or CHxCOMVAL_ADD exceeds CARL 825
Figure 24-67. Channel x output PWM duty cycle changing with CHxCOMVAL_ADD 825
Figure 24-68. Four Channels outputs in Composite PWM mode 826
Figure 24-69. CHx_O output with a pulse in edge-aligned mode (CHxOMPSEL≠2'b00) ... 827
Figure 24-70. CHx_O output with a pulse in center-aligned mode (CHxOMPSEL≠2'b00) 827
Figure 24-71. Example of counter operation in decoder interface mode 829
Figure 24-72. Example of decoder interface mode with CI0FE0 polarity inverted 829
Figure 24-73. Quadrature decoder signal disconnection detection block diagram 830
Figure 24-74. Example of counter operation in non-quadrature decoder mode 0 with CH1P=0 830
Figure 24-75. Example of counter operation in non-quadrature decoder mode 1 with CH0P=0 831
Figure 24-76. Restart mode 833
Figure 24-77. Pause mode 833
Figure 24-78. Event mode 833
Figure 24-79. Single pulse mode TIMERx_CHxCV = 0x04, TIMERx_CAR=0x60 835
Figure 24-80. delayable single pulse mode TIMERx_CHxCV=0x00, TIMERx_CAR=0x60 . 836
Figure 24-81. General level3 timer block diagram 871
Figure 24-82. Normal mode, internal clock divided by 1 872
Figure 24-83. Counter timing diagram with prescaler division change from 1 to 2 873
Figure 24-84. Timing diagram of up counting mode, PSC=0/2 874
Figure 24-85. Timing diagram of up counting mode, change TIMERx_CAR on the go 874
Figure 24-86. Repetition timechart for up-counter 875
Figure 24-87. Input capture logic for channel 0 876
Figure 24-88. Input capture logic for multi mode channel 0 876
Figure 24-89. Output compare logic (when MCHxMSEL = 2'00, x=0) 878
Figure 24-90. Output compare logic (when MCHxMSEL = 2'11, x=0) 878
Figure 24-91. Output compare logic (x=1) 878
Figure 24-92. Output-compare in three modes 880
Figure 24-93. PWM mode timechart 881
Figure 24-94. Channel x output PWM with (CHxVAL < CHxCOMVAL_ADD) 883
Figure 24-95. Channel x output PWM with (CHxVAL = CHxCOMVAL_ADD) 883
Figure 24-96. Channel x output PWM with (CHxVAL > CHxCOMVAL_ADD) 883
Figure 24-97. Channel x output PWM with CHxVAL or CHxCOMVAL_ADD exceeds CARL

..... 884
Figure 24-98. Channel x output PWM duty cycle changing with CHxCOMVAL_ADD 884
Figure 24-99. CHx_O output with a pulse in edge-aligned mode (CHxOMPSEL =2'b00).. 885
Figure 24-100. Complementary output with dead-time insertion 889
Figure 24-101. BREAK0 function logic diagram 890
Figure 24-102. Output behavior of the channel in response to BREAK0 (the break input high active and IOS=1) 890
Figure 24-103. BRKIN0 pin logic with BREAK0 function 892
Figure 24-104. Restart mode 893
Figure 24-105. Pause mode 893
Figure 24-106. Event mode 894
Figure 24-107. Single pulse mode TIMERx_CHxCV = 0x04 TIMERx_CAR=0x60 895
Figure 24-108. delayable single pulse mode TIMERx_CHxCV=0x00, TIMERx_CAR=0x60 896
Figure 24-109. General level4 timer block diagram 932
Figure 24-110. Normal mode, internal clock divided by 1 933
Figure 24-111. Counter timing diagram with prescaler division change from 1 to 2 933
Figure 24-112. Timing diagram of up counting mode, PSC=0/2 934
Figure 24-113. Timing diagram of up counting mode, change TIMERx_CAR on the go .. 935
Figure 24-114. Repetition timechart for up-counter 936
Figure 24-115. Input capture logic for channel 0 937
Figure 24-116. Input capture logic for multi mode channel 0 937
Figure 24-117. Output compare logic (when MCHxMSEL = 2'00, x=0) 938
Figure 24-118. Output compare logic (when MCHxMSEL = 2'11, x=0) 939
Figure 24-119. Output-compare in three modes 940
Figure 24-120. PWM mode timechart 941
Figure 24-121. Complementary output with dead-time insertion 944
Figure 24-122. BREAK0 function logic diagram 945
Figure 24-123. Output behavior of the channel in response to BREAK0 (the break input high active and IOS=1) 945
Figure 24-124. BRKIN0 pin logic with BREAK0 function 947
Figure 24-125. Single pulse mode TIMERx_CHxCV = 0x04 TIMERx_CAR=0x60 947
Figure 24-126. Basic timer block diagram 975
Figure 24-127. Normal mode, internal clock divided by 1 976
Figure 24-128. Counter timing diagram with prescaler division change from 1 to 2 976
Figure 24-129. Timing chart of up counting mode, PSC=0/2 (TIMERx, x=5,6) 977
Figure 24-130. Timing chart of up counting mode, change TIMERx_CAR ongoing (TIMERx, x=5,6) 977
Figure 25-1. USART module block diagram 989
Figure 25-2. USART character frame (8 bits data and 1 stop bit) 990
Figure 25-3. USART transmit procedure 992
Figure 25-4. Oversampling method of a receive frame bit (OSB = 0) 993
Figure 25-5. Configuration step when using DMA for USART transmission 994
Figure 25-6. Configuration step when using DMA for USART reception 995
Figure 25-7. Hardware flow control between two USARTs 995

Figure 25-8. Hardware flow control ... 996
Figure 25-9. Break frame occurs during idle state ... 998
Figure 25-10. Break frame occurs during a frame ... 998
Figure 25-11. Example of USART in synchronous mode ... 999
Figure 25-12. 8-bit format USART synchronous waveform (CLEN = 1) ... 999
Figure 25-13. IrDA SIR ENDEC module ... 1000
Figure 25-14. IrDA data modulation ... 1000
Figure 25-15. ISO7816-3 frame format ... 1001
Figure 25-16. USART receive FIFO structure ... 1004
Figure 25-17. USART transmitter FIFO structure ... 1004
Figure 25-18. USART interrupt mapping diagram ... 1006
Figure 26-1. I2C module block diagram ... 1032
Figure 26-2. Data validation ... 1033
Figure 26-3. START and STOP condition ... 1034
Figure 26-4. I2C communication flow with 10-bit address (Master Transmit) ... 1034
Figure 26-5. I2C communication flow with 7-bit address (Master Transmit) ... 1035
Figure 26-6. I2C communication flow with 7-bit address (Master Receive) ... 1035
Figure 26-7. I2C communication flow with 10-bit address (Master Receive when HEAD10R=0) ... 1035
Figure 26-8. I2C communication flow with 10-bit address (Master Receive when HEAD10R=1) ... 1035
Figure 26-9. Data hold time ... 1036
Figure 26-10. Data setup time ... 1037
Figure 26-11. Data transmission ... 1039
Figure 26-12. Data reception ... 1039
Figure 26-13. I2C initialization in slave mode ... 1042
Figure 26-14. Programming model for slave transmitting when SS=0 ... 1043
Figure 26-15. Programming model for slave transmitting when SS=1 ... 1044
Figure 26-16. Programming model for slave receiving ... 1045
Figure 26-17. I2C initialization in master mode ... 1046
Figure 26-18. Programming model for master transmitting (N<=255) ... 1047
Figure 26-19. Programming model for master transmitting (N>255) ... 1048
Figure 26-20. Programming model for master receiving (N<=255) ... 1049
Figure 26-21. Programming model for master receiving (N>255) ... 1050
Figure 26-22. SMBus master transmitter and slave receiver communication flow ... 1054
Figure 26-23. SMBus master receiver and slave transmitter communication flow ... 1054
Figure 27-1. Block diagram of SPI ... 1072
Figure 27-2. SPI timing diagram in normal mode ... 1074
Figure 27-3. SPI3 / 4 timing diagram in Quad-SPI mode (CKPL = 1, CKPH = 1, LF = 0) ... 1075
Figure 27-4. SPI data frame right-aligned diagram ... 1075
Figure 27-5. SPI data and clock transmission path diagram ... 1076
Figure 27-6. SPI master rx delay configuration diagram ... 1076
Figure 27-7. SPI slave rx delay configuration diagram ... 1077
Figure 27-8. NSS signal delay timing diagram (MSSD[3:0] = 0011 (3 x Tclk), MDFD = 0011 (3

x Tclk)) 1081
Figure 27-9. NSS interlaced pulses timing diagram (MSSD[3:0] = 0011 (3 x Tclk), MDFD = 0011 (3 x Tclk)) 1082
Figure 27-10. A typical full-duplex connection 1083
Figure 27-11. A typical simplex connection (Master: Receive, Slave: Transmit) 1084
Figure 27-12. A typical simplex connection (Master: Transmit only, Slave: Receive) 1084
Figure 27-13. A typical bidirectional connection 1084
Figure 27-14. Timing diagram of TI master mode with discontinuous transfer 1087
Figure 27-15. Timing diagram of TI master mode with continuous transfer 1087
Figure 27-16. Timing diagram of TI slave mode 1088
Figure 27-17. Timing diagram of quad write operation in Quad-SPI mode 1089
Figure 27-18. Timing diagram of quad read operation in Quad-SPI mode 1090
Figure 27-19. Block diagram of I2S 1095
Figure 27-20. I2S Philips standard timing diagram (DTLEN = 00, CHLEN = 0, CKPL = 0) 1097
Figure 27-21. I2S Philips standard timing diagram (DTLEN = 00, CHLEN = 0, CKPL = 1) 1097
Figure 27-22. I2S Philips standard timing diagram (DTLEN = 10, CHLEN = 1, CKPL = 0) 1097
Figure 27-23. I2S Philips standard timing diagram (DTLEN = 10, CHLEN = 1, CKPL = 1) 1097
Figure 27-24. I2S Philips standard timing diagram (DTLEN = 01, CHLEN = 1, CKPL = 0) 1097
Figure 27-25. I2S Philips standard timing diagram (DTLEN = 01, CHLEN = 1, CKPL = 1) 1097
Figure 27-26. I2S Philips standard timing diagram (DTLEN = 00, CHLEN = 1, CKPL = 0) 1098
Figure 27-27. I2S Philips standard timing diagram (DTLEN = 00, CHLEN = 1, CKPL = 1) 1098
Figure 27-28. MSB justified standard timing diagram (DTLEN = 00, CHLEN = 0, CKPL = 0) 1098
Figure 27-29. MSB justified standard timing diagram (DTLEN = 00, CHLEN = 0, CKPL = 1) 1098
Figure 27-30. MSB justified standard timing diagram (DTLEN = 10, CHLEN = 1, CKPL = 0) 1098
Figure 27-31. MSB justified standard timing diagram (DTLEN = 10, CHLEN = 1, CKPL = 1) 1098
Figure 27-32. MSB justified standard timing diagram (DTLEN = 01, CHLEN = 1, CKPL = 0) 1099
Figure 27-33. MSB justified standard timing diagram (DTLEN = 01, CHLEN = 1, CKPL = 1) 1099
Figure 27-34. MSB justified standard timing diagram (DTLEN = 00, CHLEN = 1, CKPL = 0) 1099
Figure 27-35. MSB justified standard timing diagram (DTLEN = 00, CHLEN = 1, CKPL = 1)

..... 1099
Figure 27-36. LSB justified standard timing diagram (DTLEN = 01, CHLEN = 1, CKPL = 0) 1100
Figure 27-37. LSB justified standard timing diagram (DTLEN = 01, CHLEN = 1, CKPL = 1) 1100
Figure 27-38. LSB justified standard timing diagram (DTLEN = 00, CHLEN = 1, CKPL = 0) 1100
Figure 27-39. LSB justified standard timing diagram (DTLEN = 00, CHLEN = 1, CKPL = 1) 1100
Figure 27-40. PCM standard short frame synchronization mode timing diagram (DTLEN = 00, CHLEN = 0, CKPL = 0) 1100
Figure 27-41. PCM standard short frame synchronization mode timing diagram (DTLEN = 00, CHLEN = 0, CKPL = 1) 1101
Figure 27-42. PCM standard short frame synchronization mode timing diagram (DTLEN = 10, CHLEN = 1, CKPL = 0) 1101
Figure 27-43. PCM standard short frame synchronization mode timing diagram (DTLEN = 10, CHLEN = 1, CKPL = 1) 1101
Figure 27-44. PCM standard short frame synchronization mode timing diagram (DTLEN = 01, CHLEN = 1, CKPL = 0) 1101
Figure 27-45. PCM standard short frame synchronization mode timing diagram (DTLEN = 01, CHLEN = 1, CKPL = 1) 1101
Figure 27-46. PCM standard short frame synchronization mode timing diagram (DTLEN = 00, CHLEN = 1, CKPL = 0) 1102
Figure 27-47. PCM standard short frame synchronization mode timing diagram (DTLEN = 00, CHLEN = 1, CKPL = 1) 1102
Figure 27-48. PCM standard long frame synchronization mode timing diagram (DTLEN = 00, CHLEN = 0, CKPL = 0) 1102
Figure 27-49. PCM standard long frame synchronization mode timing diagram (DTLEN = 00, CHLEN = 0, CKPL = 1) 1102
Figure 27-50. PCM standard long frame synchronization mode timing diagram (DTLEN = 10, CHLEN = 1, CKPL = 0) 1102
Figure 27-51. PCM standard long frame synchronization mode timing diagram (DTLEN = 10, CHLEN = 1, CKPL = 1) 1102
Figure 27-52. PCM standard long frame synchronization mode timing diagram (DTLEN = 01, CHLEN = 1, CKPL = 0) 1103
Figure 27-53. PCM standard long frame synchronization mode timing diagram (DTLEN = 01, CHLEN = 1, CKPL = 1) 1103
Figure 27-54. PCM standard long frame synchronization mode timing diagram (DTLEN = 00, CHLEN = 1, CKPL = 0) 1103
Figure 27-55. PCM standard long frame synchronization mode timing diagram (DTLEN = 00, CHLEN = 1, CKPL = 1) 1103
Figure 27-56. Block diagram of I2S clock generator 1104
Figure 29-1 OSPI octal communication mode block diagram 1134
Figure 29-2 OSPI quad communication mode block diagram 1135

Figure 29-3 OSPI command format in octal mode 1136
Figure 29-4 OSPI command format in quad mode 1136
Figure 29-5 CSN and SCK behavior 1138
Figure 30-1. Schematic diagram of CPDM 1165
Figure 30-2. CPDM delay line length configuration flowchart 1166
Figure 30-3. CPDM output clock phase configuration flowchart 1167
Figure 31-1. DCI module block diagram 1170
Figure 31-2. Hardware synchronization mode 1171
Figure 31-3. Hardware synchronization mode: JPEG format supporting 1172
Figure 32-1. TLI module block diagram 1188
Figure 32-2. Display timing diagram 1188
Figure 32-3. Block diagram of Blending 1191
Figure 33-1. RSPDIF block diagram 1209
Figure 33-2. S/PDIF block and S/PDIF sub-frame format 1211
Figure 33-3. Information bits coding example 1211
Figure 33-4. S/PDIF Preambles 1212
Figure 33-5. Noise filtering and rising/falling edge detection 1213
Figure 33-6. Waveforms of TWCNT 1214
Figure 33-7. Synchronization flowchart flow 1216
Figure 33-8. Synchronization process scheduling 1217
Figure 33-9. RSPDIF states 1218
Figure 33-10. RSPDIF_DATA register format 1222
Figure 33-11. Channel/user data format 1223
Figure 33-12. RSPDIF overrun error when RXSTEOMEN = 0 and RXDF[1:0] = 2’b0x 1227
Figure 33-13. RSPDIF overrun error when RXSTEOMEN = 0 and RXDF[1:0] = 2’b10 1228
Figure 33-14. RSPDIF overrun error when RXSTEOMEN = 1 and RXDF[1:0] = 2’b0x 1228
Figure 33-15. RSPDIF overrun error when RXSTEOMEN = 1 and RXDF[1:0] = 2’b10 1230
Figure 34-1. block diagram 1243
Figure 34-2. Clock divider logic 1244
Figure 34-3 FS active width 1247
Figure 34-4 FS polarity 1248
Figure 34-5 FS function 1248
Figure 34-6 Slot activation 1249
Figure 34-7 Slot distribution when FUNC = 0 1249
Figure 34-8 Slot distribution when FUNC = 1 1250
Figure 34-9 Slot partition convention 1250
Figure 34-10 Offset region treatment 1250
Figure 34-11 SD output management 1251
Figure 34-12 Data configuration 1251
Figure 34-13. PDM typical connection and timing 1252
Figure 34-14. PDM data processing diagram 1254
Figure 34-15. The start-up process of PDM data transmission 1254
Figure 34-16. Eight microphones, under different slot widths, BxDATA register data format 1255

Figure 34-17. Four microphones, under different slot widths, BxDATA register data format 1257
Figure 34-18. Dual microphones, under different slot widths, BxDATA register data format 1257
Figure 34-19 AC'97 slot partition 1259
Figure 34-20 AC'97 tag definition 1260
Figure 34-21 SPDIF data formate 1261
Figure 34-22 Mute frame activation 1263
Figure 34-23 Compander data path 1264
Figure 34-24 Frame synchronization advanced detection 1268
Figure 34-25 Frame synchronization postponed detection 1269
Figure 35-1. IPA block diagram 1288
Figure 35-2. Pixel extension from 'RGB888' to 'ARGB8888' 1293
Figure 35-3. Pixel extension from 'RGB565' to 'ARGB8888' 1293
Figure 35-4. Pixel extension from 'ARGB1555' or 'ARGB4444' to 'ARGB8888' 1293
Figure 35-5. Sampling method of decimation filter 1295
Figure 35-6. Bilinear Scaling diagram 1296
Figure 35-7. Pixel compression 1298
Figure 35-8. Inter timer operation 1299
Figure 35-9. System connection of IPA 1306
Figure 36-1. SDIO "no response" and "no data" operations 1332
Figure 36-2. SDIO multiple blocks read operation 1332
Figure 36-3. SDIO multiple blocks write operation 1332
Figure 36-4. SDIO sequential read operation 1333
Figure 36-5. SDIO sequential write operation 1333
Figure 36-6. SDIO block diagram 1334
Figure 36-7. CRU unit 1341
Figure 36-8. Hardware flow timing 1345
Figure 36-9. Command Token Format 1347
Figure 36-10. Response Token Format 1359
Figure 36-11. 1-bit data bus width 1363
Figure 36-12. 4-bit data bus width 1363
Figure 36-13. 8-bit data bus width 1363
Figure 36-14. 4-bit data bus DDR 1364
Figure 36-15. 8-bit data bus DDR 1364
Figure 36-16. Boot operation timing 1374
Figure 36-17. Alternative Boot operation timing 1375
Figure 36-18. CMD5 timing 1385
Figure 36-19. CMD12 stream timing 1387
Figure 36-20. Multiple block 4-Bit write interrupt cycle timing 1388
Figure 37-1. CFP Management Interface Architecture 1410
Figure 37-2. MDIO Architecture 1410
Figure 37-3. MDIO Frame Structure 1411
Figure 37-4. MDIO slave communication process 1413

Figure 38-1. The EXMC block diagram 1422
Figure 38-2. EXMC memory banks 1424
Figure 38-3. Four regions of bank0 address mapping 1425
Figure 38-4. NAND address mapping 1426
Figure 38-5. Diagram of bank2 common space 1427
Figure 38-6. SDRAM address mapping 1428
Figure 38-7. Mode 1 read access 1432
Figure 38-8. Mode 1 write access 1433
Figure 38-9. Mode A read access 1434
Figure 38-10. Mode A write access 1434
Figure 38-11. Mode 2/B read access 1436
Figure 38-12. Mode 2 write access 1436
Figure 38-13. Mode B write access 1436
Figure 38-14. Mode C read access 1438
Figure 38-15. Mode C write access 1438
Figure 38-16. Mode D read access 1440
Figure 38-17. Mode D write access 1440
Figure 38-18. Multiplex mode read access 1441
Figure 38-19. Multiplex mode write access 1442
Figure 38-20. Read access timing diagram under async-wait signal assertion 1443
Figure 38-21. Write access timing diagram under async-wait signal assertion 1444
Figure 38-22. Read timing of synchronous multiplexed burst mode 1446
Figure 38-23. Write timing of synchronous multiplexed burst mode 1447
Figure 38-24. Access timing of common memory space of NAND flash controller 1450
Figure 38-25. Access to none "NCE don’t care" NAND Flash 1451
Figure 38-26. SDRAM controller block diagram 1454
Figure 38-27. Burst read operation 1458
Figure 38-28. Data sampling clock delay chain 1458
Figure 38-29. Burst write operation 1459
Figure 38-30. Read access when FIFO not hit (BRSTRD=1, CL=2, SDCLK=2, PIPED=2) 1460
Figure 38-31. Read access when FIFO hit (BRSTRD=1) 1460
Figure 38-32. Cross boundary read operation 1461
Figure 38-33. Cross boundary write operation 1461
Figure 38-34. Process for self-refresh entry and exit 1462
Figure 38-35. Process for power-down entry and exit 1463
Figure 39-1.Precision reference connection 1482
Figure 40-1. LPDTS block diagram 1486
Figure 40-2. Method for different REF_CLK 1488
Figure 41-1. Block diagram of EDOUT 1499
Figure 41-2. ABZ-phase output waveforms 1500
Figure 41-3. Example of the settings of EDOUT and the AB-Phase and Z-Phase output waveforms 1502
Figure 42-1. CAN module block diagram 1509
Figure 42-2. Transmitter delay 1540

Figure 42-3. CAN bit time 1543
Figure 43-1. ENET module block diagram 1579
Figure 43-2. MAC / Tagged MAC frame format 1581
Figure 43-3. Station management interface signals 1583
Figure 43-4. Media independent interface signals 1585
Figure 43-5. Reduced media-independent interface signals 1587
Figure 43-6. Descriptor ring and chain structure 1599
Figure 43-7. Transmit descriptor in normal mode 1605
Figure 43-8. Transmit descriptor in enhanced mode 1611
Figure 43-9. Receive descriptor in normal mode 1614
Figure 43-10. Receive descriptor in enhanced mode 1621
Figure 43-11. Wakeup frame filter register 1626
Figure 43-12. System time update using the fine correction method 1628
Figure 43-13. MAC interrupt scheme 1633
Figure 43-14. Ethernet interrupt scheme 1634
Figure 43-15. Wakeup frame filter register 1644
Figure 44-1. CMP block diagram 1686
Figure 44-2. CMP hysteresis 1688
Figure 44-3. The CMP outputs signal blanking 1689
Figure 45-1. HPDF block diagram 1698
Figure 45-2. The sequence diagram of SPI data transmission 1702
Figure 45-3. The sequence diagram of Manchester data transmission 1703
Figure 45-4. Manchester synchronous sequence diagram 1703
Figure 45-5. Clock loss detection timing diagram 1706
Figure 45-6. Channel pins redirection 1707
Figure 45-7. HPDF module external input data processing flow 1717
Figure 45-8. HPDF interrupt logic diagram 1719
Figure 46-1. RTDEC block diagram (for RTDEC0 and RTDEC1) 1741
Figure 46-2. Decryption flow with AES-128 in CTR mode 1743
Figure 46-3. RTDEC interrupt mapping diagram 1746
Figure 47-1 FAC structure diagram 1756
Figure 47-2 Input buffer area 1757
Figure 47-3 Circular input buffer area 1758
Figure 47-4 Circular input buffer operation 1759
Figure 47-5 Circular output buffer 1759
Figure 47-6 Circular output buffer area 1760
Figure 47-7 The structure of FIR filter function 1762
Figure 47-8 The structure of IIR filter 1763
Figure 48-1. HWSEM diagram 1775
Figure 48-2. HWSEM state machine 1776
Figure 48-3. First try lock success 1778
Figure 48-4. Second try lock success 1779
Figure 48-5. Second try lock fail 1779
Figure 48-6. HWSEM interrupt logic 1779

Figure 49-1. USBHS block diagram 1786
Figure 49-2. Connection using internal embedded PHY with host or device mode 1788
Figure 49-3. Connection using internal embedded PHY with OTG mode 1789
Figure 49-4. Connection using external ULPI PHY 1789
Figure 49-5. State transition diagram of host port 1790
Figure 49-6. Host mode FIFO space in SRAM 1796
Figure 49-7. Host mode FIFO access register map 1796
Figure 49-8. Device mode FIFO space in SRAM 1797
Figure 49-9. Device mode FIFO access register map 1798

List of Tables

Table 1-1. The interconnection relationship of the interconnect matrix 61
Table 1-2. Memory map of GD32H7xx devices 65
Table 1-3. Configuration of ITCM/DTCM/AXI SRAM 74
Table 1-4. Boot mode selection 75
Table 1-5. Details of Boot mode 76
Table 1-6. Configuration of ASIBs 78
Table 1-7. Configuration of AMIBs 78
Table 2-1. RAMECC monitor x unit for Region 0 (x=0..4) 130
Table 2-2. RAMECC monitor x unit for Region 1 (x=0..2) 130
Table 3-1. GD32H7xx base address and size for flash memory 137
Table 3-2. Option byte 146
Table 3-3. WP bit for sectors protected 149
Table 3-4. SPC protection level configuration 151
Table 3-5. DCRP area configuration 152
Table 3-6. Secure user area configuration 154
Table 3-7. Function resetAndInitializeSecureAreas 156
Table 3-8. Function exitSecureArea 156
Table 3-9 FMC interrupt requests 159
Table 4-1. System parameters 182
Table 4-2. EFUSE interrupt requests 185
Table 5-1. Supply mode 208
Table 5-2. Power saving mode summary 211
Table 6-1. Clock output 0 source select 231
Table 6-2. Clock output 1 source select 231
Table 8-1. NVIC exception types in Cortex®-M7 329
Table 8-2. Interrupt vector table 329
Table 8-3. EXTI source 336
Table 9-1. Trigger input bit fields selection 345
Table 9-2. TRIGSEL input and output mapping 349
Table 10-1. GPIO configuration table 390
Table 12-1. ALGO configurations 422
Table 15-1. Input data configuration 478
Table 15-2. Output data configuration 479
Table 15-3. TMU mode configuration 479
Table 15-4. Mode 0 description 480
Table 15-5. Mode 1 description 481
Table 15-6. Mode 2 description 482
Table 15-7. Mode 3 description 483
Table 15-8. Mode 4 description 484
Table 15-9. Mode 5 description 484

Table 15-10. Mode 6 description 485
Table 15-11. Mode 7 description 486
Table 15-12. Mode 8 description 487
Table 15-13. Recommended scaling factors in mode 8 487
Table 15-14. Mode 9 description 487
Table 15-15. Recommended scaling factors in mode 9 488
Table 15-16. Precision vs. number of iterations 488
Table 16-1. Transfer mode 497
Table 16-2. CNT configuration 500
Table 16-3. FIFO counter critical value configuration rules 501
Table 16-4. DMA interrupt events 508
Table 17-1. Transfer mode 525
Table 17-2. MDMA hardware request sources 526
Table 17-3. Source and destination address generation configuration 531
Table 17-4. Update mode of source and destination address 533
Table 17-5. Register link address 533
Table 17-6. MDMA error flags 534
Table 17-7. MDMA interrupt events 535
Table 18-1. Interrupt events 557
Table 18-2. Request multiplexer input mapping 558
Table 18-3. Trigger input mapping 563
Table 18-4. Synchronization input mapping 564
Table 19-1. Pin assignment 571
Table 20-1. ADC internal input signals 583
Table 20-2. ADC input pins definition 583
Table 20-3. ADC differential channel pin matching 586
Table 20-4. Trigger source for routine channels for ADC0/ADC1/ADC2 592
Table 20-5. t_{CONV} timings depending on resolution for ADC0 and ADC1 595
Table 20-6. t_{CONV} timings depending on resolution for ADC2 595
Table 20-7. Some examples show the maximum output results for N and M combimations (grayed values indicates truncation，for 12bit ADC) 597
Table 20-8. ADC sync mode table 598
Table 21-1. DAC I/O description 628
Table 21-2. DAC triggers and outputs summary 628
Table 21-3. Triggers of DAC 629
Table 21-4. Formula of sample and refresh time 634
Table 22-1. Min/max FWDGT timeout period at 32KHz (IRC32K) 652
Table 22-2. Min-max timeout value at 150 MHz (f_{PCLK3}) 659
Table 23-1 RTC pin configuration and function 674
Table 23-2 RTC power saving mode management 674
Table 23-3 RTC interrupts control 675
Table 24-1. Timers (TIMERx) are divided into five sorts 695
Table 24-2. Advanced timer channel description 699
Table 24-3.The Composite PWM pulse width 715

Table 24-4. Complementary outputs controlled by parameters (MCHxMSEL =2'b11) 721
Table 24-5. Output behavior of the channel in response to a BREAK0 and BREAK1 (the break input is high active) 725
Table 24-6. Break function input pins locked/ released conditions 726
Table 24-7. Counting direction in different quadrature decoder signals 728
Table 24-8. the counter operation in in non-quadrature decoder mode 1 730
Table 24-9. Examples of slave mode 732
Table 24-10.The Composite PWM pulse width 823
Table 24-11. Counting direction in different quadrature decoder signals 829
Table 24-12. the counter operation in in non-quadrature decoder mode 1 831
Table 24-13. Examples of slave mode 832
Table 24-14.The Composite PWM pulse width 882
Table 24-15. Complementary outputs controlled by parameters (MCHxMSEL =2'b11) 888
Table 24-16. Break function input pins locked/ released conditions 892
Table 24-17. Slave mode example table 892
Table 24-18. Complementary outputs controlled by parameters (MCHxMSEL =2'b11) 942
Table 24-19. Break function input pins locked/ released conditions 946
Table 25-1. Description of USART important pins 989
Table 25-2. Configuration of stop bits 990
Table 25-3. USART interrupt requests 1005
Table 26-1. Definition of I2C-bus terminology (refer to the I2C specification of Philips semiconductors) 1032
Table 26-2. Data setup time and data hold time 1038
Table 26-3. Communication modes to be shut down 1039
Table 26-4. I2C error flags 1055
Table 26-5. I2C interrupt events 1055
Table 27-1. SPI signal description 1073
Table 27-2. Quad-SPI signal description 1073
Table 27-3. MISO / MISO signal switching description 1074
Table 27-4. The maxinum number of data frame stored in SPIX FIFO 1077
Table 27-5. NSS function in slave mode 1080
Table 27-6. NSS function in master mode 1081
Table 27-7. SPI operation modes 1082
Table 27-8. SPI interrupt requests 1094
Table 27-9. I2S bitrate calculation formulas 1104
Table 27-10. Audio sampling frequency calculation formulas 1104
Table 27-11. The maxinum number of data frame stored in I2SX FIFO 1105
Table 27-12. Direction of I2S interface signals for each operation mode 1105
Table 27-13. I2S interrupt 1109
Table 28-1 OSPIM matrix mapping 1130
Table 29-1 OSPI signal description 1132
Table 29-2 OSPI interrupt requests 1143
Table 31-1. PINs used by DCI 1171
Table 31-2. Typical one-line data composition 1173

Table 31-3. Coding for SAV and EAV 1173
Table 31-4. A frame image format definition 1174
Table 31-5. General case of progressive mode 1174
Table 31-6. Memory view in byte padding mode 1176
Table 31-7. Memory view in half-word padding mode 1176
Table 31-8. Status/Error flags 1176
Table 32-1. Pins of display interface provided by TLI 1188
Table 32-2. Supported pixel formats 1190
Table 32-3. Status flags 1192
Table 32-4. Error flags 1192
Table 33-1. Sub-frame pattern 1210
Table 33-2. Preamble pattern 1212
Table 33-3. RSPDIF time interval 1212
Table 33-4. Transition encoder encoding rules 1215
Table 33-5. Thresholds calculation 1215
Table 33-6. Preamble transition sequence 1215
Table 33-7. Bi-phase decoding rules 1215
Table 33-8. RSPDIF state 1218
Table 33-9. RSPDIF_CTL register access permissions in different states 1220
Table 33-10. Mixing data and control flow 1223
Table 33-11. Minimum rspdif_ck frequency and audio sampling rate 1224
Table 33-12. Conditions of RSPDIF_symbol_ck generation 1225
Table 33-13. RSPDIF interrupt events 1230
Table 34-1. Commonly used audio sampling rate 1245
Table 34-2. External synchronization configuration 1247
Table 34-3 FIFO request generation conditions 1252
Table 34-4 Get the microphone data read register times under different configurations 1255
Table 34-5. TDM configuration 1258
Table 34-6 AC'97 transmitter tag definition 1260
Table 34-7 AC'97 receiver tag definition 1260
Table 34-8. SOPD mode 1261
Table 34-9 Parity bit calculation 1262
Table 34-10 Mute frame composition 1263
Table 34-11 A-law encoding 1264
Table 34-12 A-law decoding 1265
Table 34-13 Mu-law encoding 1265
Table 34-14 Mu-law decoding 1266
Table 34-15 Interrupt control 1270
Table 35-1. Signals description of IPA 1289
Table 35-2. IPA conversion mode 1290
Table 35-3. Foreground and background CLUT pixel format 1291
Table 35-4. Foreground and background pixel format 1292
Table 35-5. Expected coefficients for YUV and YCbCr modes 1294

Table 35-6. Alpha channel value modulation 1294
Table 35-7. Destination pixel format 1297
Table 35-8. IPA interrupt events 1304
Table 36-1. 2 SDIOs 1330
Table 36-2. SDIO operation modes for SD & SD I/O card 1333
Table 36-3. SDIO operation modes for *e*•MMC card 1333
Table 36-4. SDIO internal input/output singnals 1334
Table 36-5. SDIO pins functions 1335
Table 36-6. SDIO CMD and data phase selection 1335
Table 36-7. SDIO connections to MDMA 1344
Table 36-8. AHB and *e*•MMC clock frequence relation 1344
Table 36-9. AHB and SD/SD I/O card clock frequence relation 1344
Table 36-10. Command format 1347
Table 36-11. Card command classes (CCCs) 1347
Table 36-12. Basic commands (class 0) 1349
Table 36-13. Block-Oriented read commands (class 2) 1352
Table 36-14. Stream read commands (class 1) and stream write commands (class 3) .. 1353
Table 36-15. Block-Oriented write commands (class 4) 1353
Table 36-16. Erase commands (class 5) 1354
Table 36-17. Block oriented write protection commands (class 6) 1355
Table 36-18. Lock card (class 7) 1355
Table 36-19. Application-specific commands (class 8) 1356
Table 36-20. I/O mode commands (class 9) 1357
Table 36-21. Switch function commands (class 10) 1358
Table 36-22. Response R1 1360
Table 36-23. Response R2 1360
Table 36-24. Response R3 1360
Table 36-25. Response R4 for e•MMC 1361
Table 36-26. Response R4 for SD I/O 1361
Table 36-27. Response R5 for *e*•MMC 1361
Table 36-28. Response R5 for SD I/O 1362
Table 36-29. Response R6 1362
Table 36-30. Response R7 1362
Table 36-31. Card status 1365
Table 36-32. SD status 1368
Table 36-33. Performance move field 1370
Table 36-34. AU_SIZE field 1370
Table 36-35. Maximum AU size 1371
Table 36-36. Erase size field 1371
Table 36-37. Erase timeout field 1371
Table 36-38. Erase offset field 1372
Table 36-39. Lock card data structure 1382
Table 36-40. CMD12 instructions 1385
Table 36-41. SDIO_RESPx register at different response type 1396

Table 37-1. MDIO pins definition 1409
Table 37-2. Frame Details for Different Frame Types (1) 1411
Table 37-3. Operation Code 1412
Table 38-1. EXMC bank mapping 1424
Table 38-2. SDRAM mapping 1428
Table 38-3. NOR flash interface signals description 1428
Table 38-4. PSRAM non-muxed signal description 1429
Table 38-5. EXMC bank 0 supports all transactions 1429
Table 38-6. NOR / PSRAM controller timing parameters 1431
Table 38-7. EXMC timing models 1431
Table 38-8. Mode 1 related registers configuration 1433
Table 38-9. Mode A related registers configuration 1434
Table 38-10. Mode 2/B related registers configuration 1437
Table 38-11. Mode C related registers configuration 1438
Table 38-12. Mode D related registers configuration 1440
Table 38-13. Multiplex mode related registers configuration 1442
Table 38-14. Timing configurations of synchronous multiplexed read mode 1446
Table 38-15. Timing configurations of synchronous multiplexed write mode 1447
Table 38-16. 8-bit or 16-bit NAND interface signal 1448
Table 38-17. Bank2 of EXMC support the memory and access mode 1449
Table 38-18. NAND flash programmable parameters 1450
Table 38-19. SDRAM command truth table 1455
Table 38-20. IO definition of SDRAM controller 1455
Table 39-1. VREF modes 1482
Table 40-1. LPDTS signals 1487
Table 40-2. Sampling time configuration 1488
Table 40-3. Trigger configuration 1489
Table 40-4. Temperature sensor behavior in low-power modes 1490
Table 40-5. Temperature sensor behavior in low-power modes 1491
Table 42-1. Mailbox descriptor with 64 byte payload 1510
Table 42-2. Data bytes for DLC 1512
Table 42-3. Mailbox Rx CODE 1512
Table 42-4. Mailbox Tx CODE 1513
Table 42-5. Mailbox size 1515
Table 42-6. Rx FIFO descriptor 1516
Table 42-7. Mailbox arbitration value(32 bit) when local priority disabled 1525
Table 42-8. Mailbox arbitration value(35 bit) when local priority enabled 1526
Table 42-9. Rx mailbox matching 1532
Table 42-10. Rx FIFO matching 1533
Table 42-11. Interrupt events 1546
Table 42-12. Rx FIFO filter element number 1560
Table 43-1. Ethernet signals (MII) 1581
Table 43-2. Ethernet signals (RMII) 1582
Table 43-3. Clock range 1584

Table 43-4. Rx interface signal encoding 1586
Table 43-5. Destination address filtering table 1592
Table 43-6. Source address filtering table 1593
Table 43-7. Error status decoding in Receive Descriptor0, only used for normal descriptor (DFM=0) 1618
Table 43-8. Supported time stamp snapshot with PTP register configuration 1663
Table 44-1. CMP inputs and outputs summary 1687
Table 45-1. HPDF pins definition 1698
Table 45-2. HPDF internal signal 1699
Table 45-3. SPI interface clock configuration 1701
Table 45-4. Parallel data packed mode 1710
Table 45-5. Trigger signal of inserted group 1712
Table 45-6. The relationship between the maximum output resolution and oversampling filtering of SincX filtering 1713
Table 45-7. Relationship between the maximum output resolution and IOR, SFOR, SFO of the integrator 1714
Table 45-8. Features of threshold monitor working mode 1714
Table 45-9. Maximum output rate 1718
Table 45-10. HPDF interrupt event 1719
Table 46-1. RTDEC interrupt requests 1746
Table 47-1 IEEE 32-Bit Single Precision Floating-Point Format 1764
Table 48-1. interrupt events 1779
Table 49-1. USBHS signal description 1786
Table 49-2. USBHS supported speeds 1787
Table 49-3. USBHS global interrupt 1806
Table 50-1. List of abbreviations used in register 1882
Table 50-2. List of terms 1882
Table 51-1. Revision history 1884

1. System and memory architecture

The devices of GD32H7xx series are 32-bit general-purpose microcontrollers based on the Arm® Cortex®-M7 processor. The Arm® Cortex®-M7 processor includes 64-bit AMBA4 AXI, 32-bit AHB peripheral (AHBP) port, 32-bit AHB slave port for external master to access memories and APB interface for CoreSight debug components. The memory organization uses a Harvard architecture, pre-defined memory map and up to 4 GB of memory space, making the system flexible and extendable.

1.1. Arm® Cortex®-M7 processor

The Arm® Cortex®-M7 processor is a highly efficient high-performance, embedded processor that features low interrupt latency, low-cost debug, and has backwards compatibility with existing Cortex-M profile processors. The processor has an in-order super-scalar pipeline that means many instructions can be dual-issued, including load/load and load/store instruction pairs because of multiple memory interfaces. The Cortex®-M7 is a high-performance processor, which features a 6-stage superscalar pipeline with branch prediction and an optional FPU capable of single-precision and optionally double-precision operations. The instruction and data buses have been enlarged to 64-bit wide over the previous 32-bit buses.

The interfaces that the processor supports include:

- 64-bit AXI4 interface
- 32-bit AHB master interface
- 32-bit AHB slave interface
- 64-bit instruction TCM interface
- 2x32-bit data TCM interfaces

The processor contains the following external interfaces:

- AHBP interface
- AHBS interface
- AHBD interface
- External Private Peripheral Bus
- ATB interfaces
- TCM interface
- Cross Trigger interface
- MBIST interface
- AXIM interface

The Cortex®-M7 processor is based on the ARMv7-M architecture and supports a powerful and scalable instruction set including general data processing I/O control tasks, advanced data processing bit field manipulations, DSP and floating point instructions. Some system peripherals listed below are also provided by Cortex®-M7:

- Nested Vectored Interrupt Controller (NVIC)
- Flash Patch and Breakpoint (FPB)
- Data Watchpoint and Trace (DWT)
- Instrumentation Trace Macrocell (ITM)
- Embedded Trace Macrocell (ETM)
- JTAG or SWD Debug Port
- Trace Port Interface Unit (TPIU)
- Memory Protection Unit (MPU)
- Floating Point Unit (FPU), double-precision
- Load Store Unit (LSU)
- Data Processing Unit (DPU)
- Prefetch Unit (PFU)

Figure 1-1. The structure of the Cortex®-M7 processor shows the Cortex®-M7 processor block diagram. For more information, refer to the Arm® Cortex®-M7 Technical Reference Manual.

Figure 1-1. The structure of the Cortex®-M7 processor

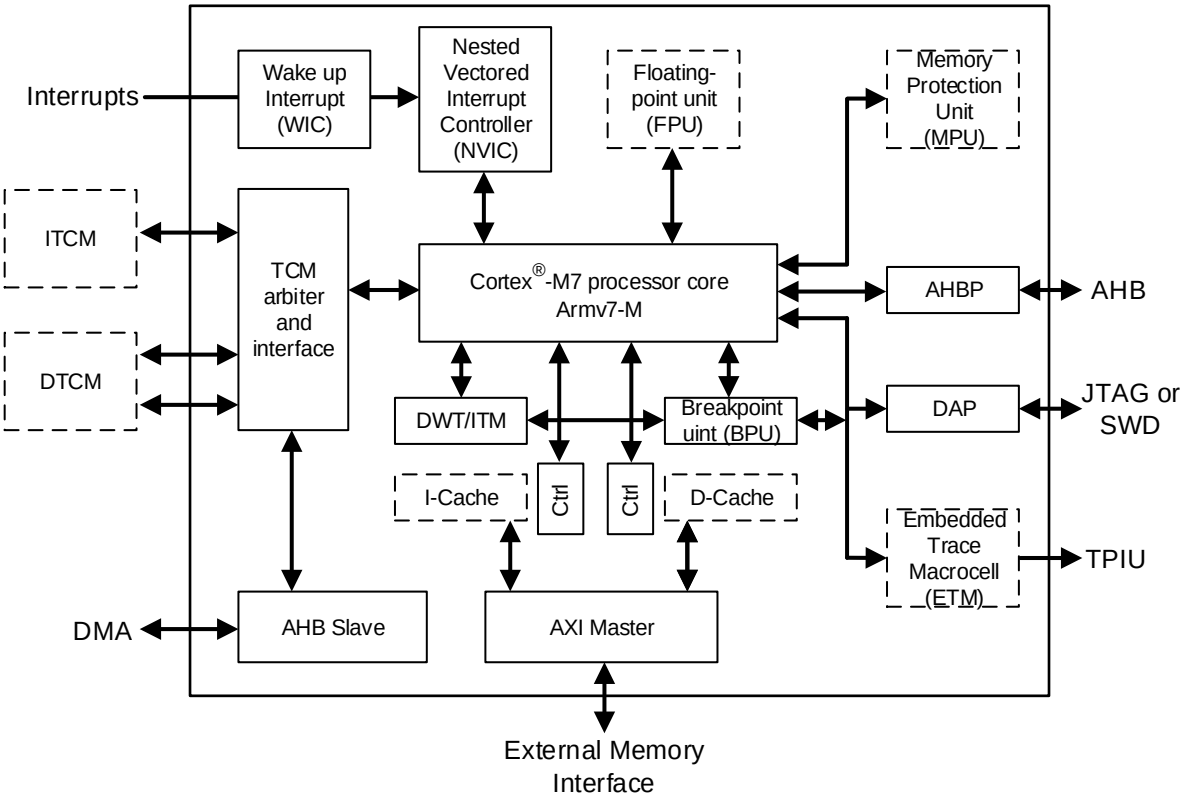

1.2. System architecture

An interconnect matrix includes an AXI bus matrix and two AHB bus matrices, which enables parallel access paths between multiple masters and slaves in the system. The interconnection

relationship of the interconnect matrix is shown in ***Table 1-1. The interconnection relationship of the interconnect matrix***. In the following table, "1" indicates the corresponding master is able to access the corresponding slave through the interconnect matrix, while the blank means the corresponding master cannot access the corresponding slave through the interconnect matrix.

Table 1-1. The interconnection relationship of the interconnect matrix

Slave interface \ Master interface	AXIM	AHBP	ITCM	DTCM	MDMA AXI	MDMA AHBS	DMA0 MEM	DMA0 PERIPH	DMA1 MEM	DMA1 PERIPH	IPA	TLI	SDIO0	SDIO1	ENET	USBHS0	USBHS1
ITCM			1			1											
DTCM				1		1											
FMC	1				1		1	1	1	1	1	1	1	1	1	1	1
AXI SRAM	1				1		1	1	1	1	1	1	1	1	1	1	1
RAM shared (ITCM/DTCM/AXI)	1				1		1	1	1	1	1	1	1	1	1	1	1
SRAM0	1				1		1	1	1	1	1			1	1	1	1
SRAM1	1				1		1	1	1	1	1			1	1	1	1
Backup RAM	1				1		1	1	1	1				1			1
AHB1	1	1			1		1	1	1	1	1			1			
AHB2		1					1	1	1	1				1			
AHB3	1				1												
AHB4	1				1		1	1	1	1				1			1
APB1		1					1	1	1	1				1			
APB2		1					1	1	1	1				1			
APB3	1				1												
APB4	1				1		1	1	1	1				1			1
EXMC	1				1		1	1	1	1	1	1	1	1	1	1	1
OSPI	1				1		1	1	1	1	1	1	1	1	1	1	1

The system architecture of GD32H7xx devices is shown in ***Figure 1-2. The system architecture of GD32H7xx devices***, and the work frequency is related to the voltage of power supply, please refer to the datasheet.

Figure 1-2. The system architecture of GD32H7xx devices

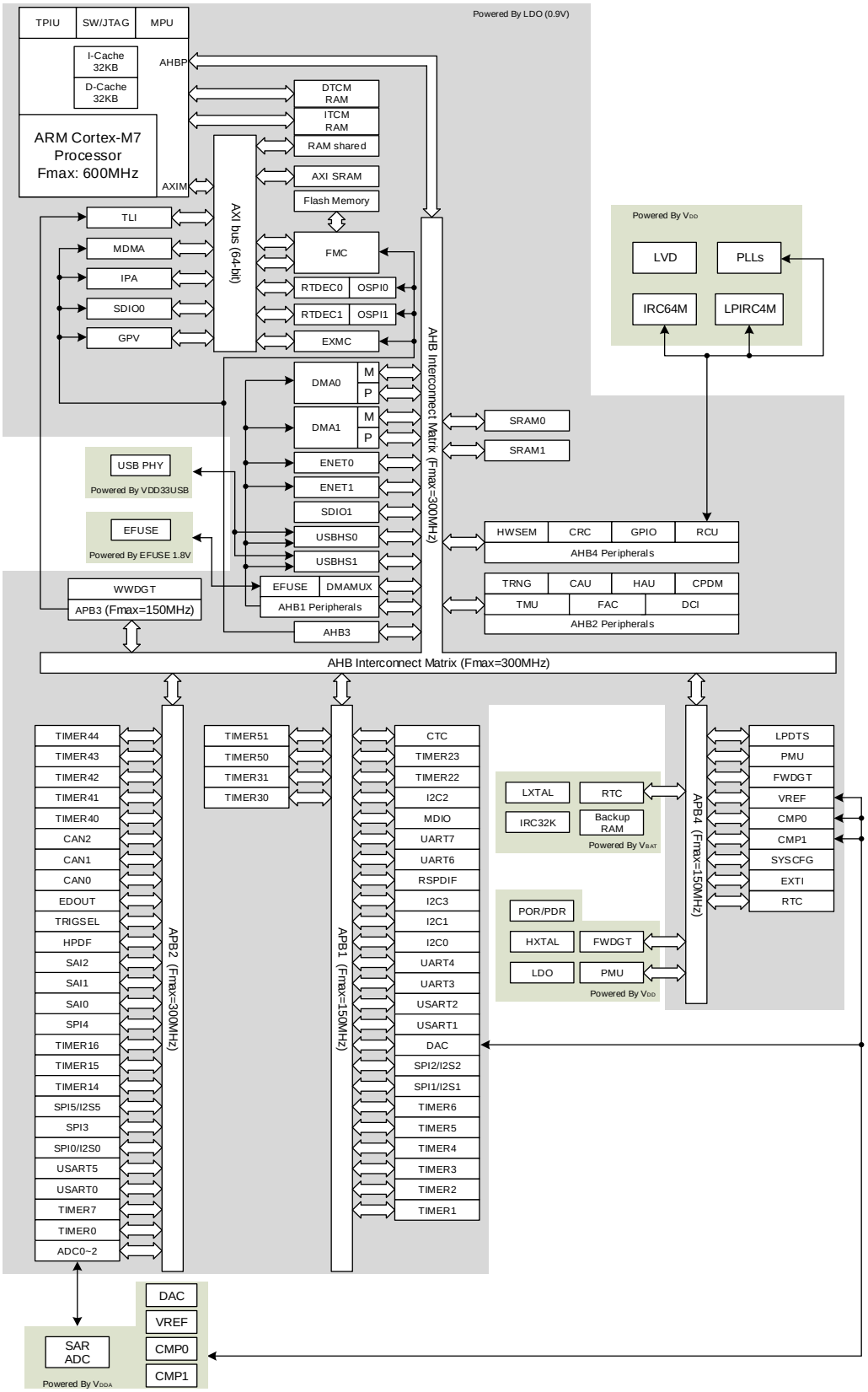

1.2.1. Bus matrix Region 0

The 64-bit AXI bus matrix Region 0 is shown in *Figure 1-3. Bus matrix Region 0*.

Figure 1-3. Bus matrix Region 0

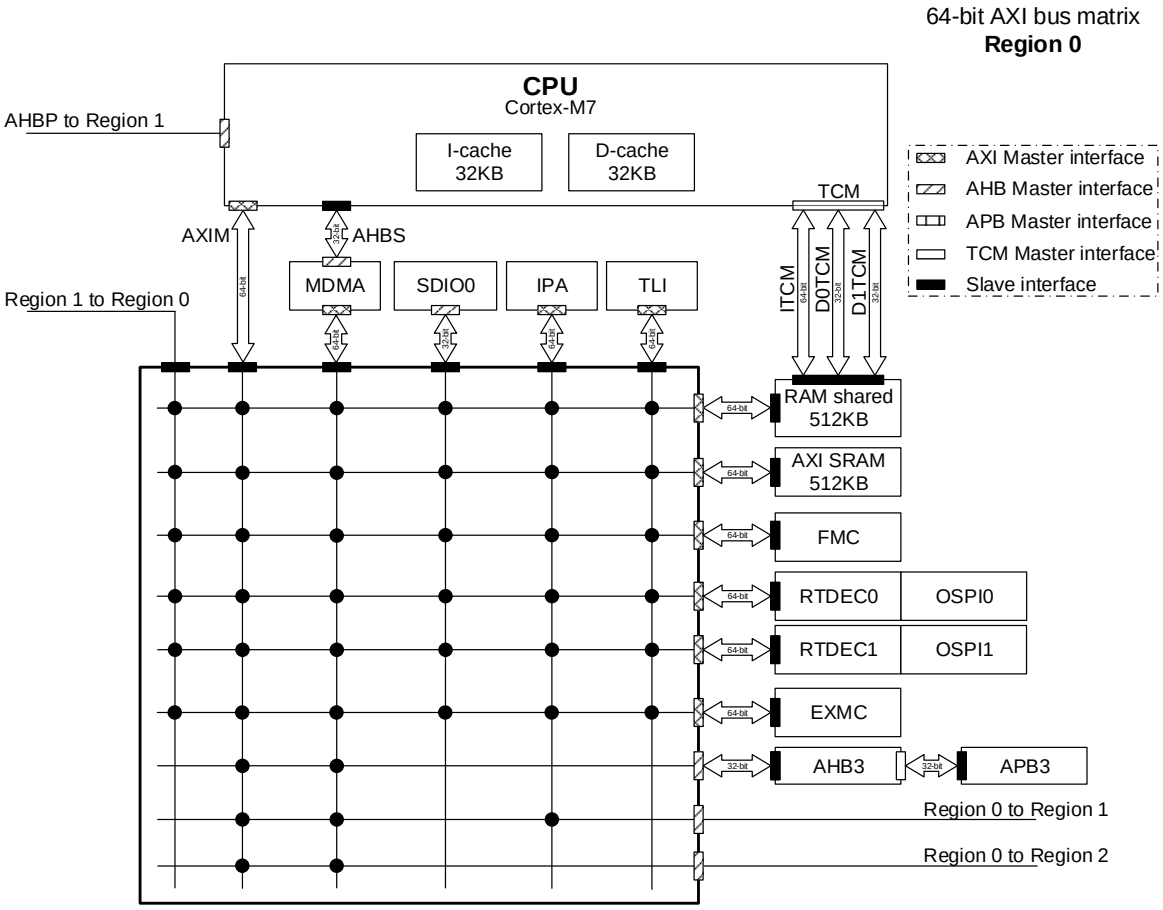

1.2.2. Bus matrix Region 1

The 32-bit AHB bus matrix Region 1 is shown in *Figure 1-4. Bus matrix Region 1*.

Figure 1-4. Bus matrix Region 1

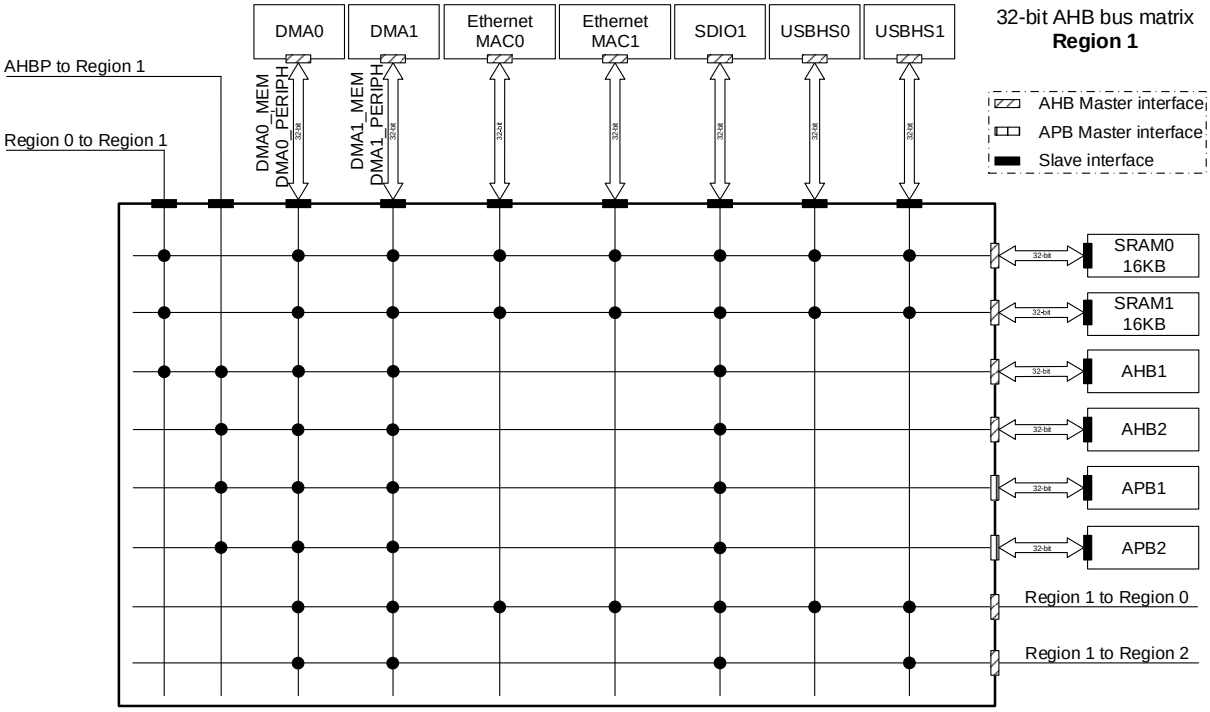

1.2.3. Bus matrix Region 2

The 32-bit AHB bus matrix Region 2 is shown in ***Figure 1-5. Bus matrix Region 2***.

Figure 1-5. Bus matrix Region 2

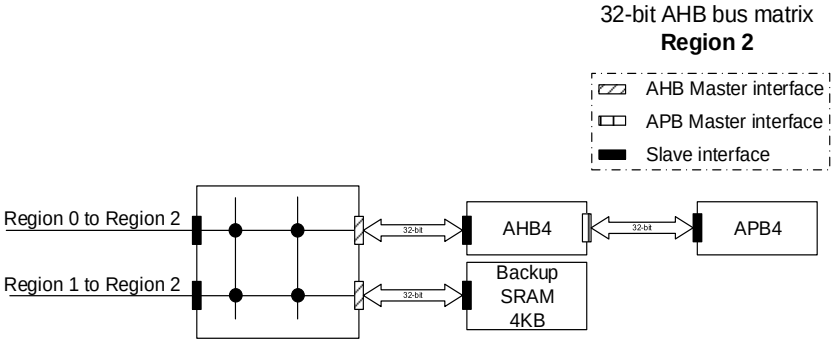

As is shown above, there are 3 Regions of bus matrix, including I-Cache, D-Cache, TCM, MDMA, DMA0, DMA1, IPA, TLI, SDIO0, SDIO1, ENET, USBHS0 and USBHS1. The AXI bus matrix in Region 0 and AHB bus matrix in Region 1 and Region 2 provide guarantee and arbitration for concurrent access from multiple masters to multiple slaves. Arbitration adopts round-robin scheduling algorithm with QoS function in Region 0 and round-robin scheduling algorithm in Region 1 and Region 2. The ITCM and DTCM are directly connected to the Cortex®-M7 core through TCM buses and the accesses of ITCM and DTCM are zero-wait states. ENET is the Ethernet. TLI is the TFT LCD interface. USBHS is the high-speed USB. And IPA is the image processing accelerator.

1.3. Memory map

The Arm® Cortex®-M7 processor is structured in Harvard architecture which can use separate buses to fetch instructions and load/store data. ***Table 1-2. Memory map of GD32H7xx devices*** shows the memory map of the GD32H7xx series devices, including Code, SRAM, peripheral, and other pre-defined regions. Almost each peripheral is allocated 1KB of space. This allows simplifying the address decoding for each peripheral.

Table 1-2. Memory map of GD32H7xx devices

Pre-defined Regions	Bus	Address	Peripherals
External RAM		0xD000 0000 - 0xDFFF FFFF	EXMC - SDRAM device 1
		0xC000 0000 - 0xCFFF FFFF	EXMC - SDRAM device 0 (EXMC Bank 0 Region 0-3)
		0xA000 1000 - 0xBFFF FFFF	Reserved
		0xA000 0000 - 0xA000 0FFF	Reserved
		0x9000 0000 - 0x9FFF FFFF	OSPI0
		0x8000 0000 - 0x8FFF FFFF	EXMC - NAND
		0x7000 0000 - 0x7FFF FFFF	OSPI1
		0x6000 0000 - 0x6FFF FFFF	EXMC - NOR/PSRAM/SRAM
Peripheral	AHB4	0x5802 7000 - 0x5FFF FFFF	Reserved
		0x5802 6400 - 0x5802 67FF	HWSEM
		0x5802 6000 - 0x5802 63FF	Reserved
		0x5802 5000 - 0x5802 5FFF	Reserved
		0x5802 4C00 - 0x5802 4FFF	CRC
		0x5802 4800 - 0x5802 4BFF	Reserved
		0x5802 4400 - 0x5802 47FF	RCU
		0x5802 2C00 - 0x5802 43FF	Reserved
		0x5802 2800 - 0x5802 2BFF	GPIOK
		0x5802 2400 - 0x5802 27FF	GPIOJ
		0x5802 2000 - 0x5802 23FF	Reserved
		0x5802 1C00 - 0x5802 1FFF	GPIOH
		0x5802 1800 - 0x5802 1BFF	GPIOG
		0x5802 1400 - 0x5802 17FF	GPIOF
		0x5802 1000 - 0x5802 13FF	GPIOE
		0x5802 0C00 - 0x5802 0FFF	GPIOD
		0x5802 0800 - 0x5802 0BFF	GPIOC
		0x5802 0400 - 0x5802 07FF	GPIOB
		0x5802 0000 - 0x5802 03FF	GPIOA
		0x5801 0000 - 0x5801 FFFF	Reserved
	APB4	0x5800 7400 - 0x5800 FFFF	Reserved
		0x5800 7000 - 0x5800 73FF	Reserved

Pre-defined Regions	Bus	Address	Peripherals
		0x5800 6C00 - 0x5800 6FFF	Reserved
		0x5800 6800 - 0x5800 6BFF	LPDTS
		0x5800 5800 - 0x5800 67FF	PMU
		0x5800 5400 - 0x5800 57FF	Reserved
		0x5800 4C00 - 0x5800 53FF	Reserved
		0x5800 4800 - 0x5800 4BFF	FWDGT
		0x5800 4000 - 0x5800 43FF	RTC
		0x5800 3C00 - 0x5800 3FFF	VREF
		0x5800 3800 - 0x5800 3BFF	CMP0 - CMP1
		0x5800 3400 - 0x5800 37FF	Reserved
		0x5800 3000 - 0x5800 33FF	Reserved
		0x5800 2C00 - 0x5800 2FFF	Reserved
		0x5800 2800 - 0x5800 2BFF	Reserved
		0x5800 2400 - 0x5800 27FF	Reserved
		0x5800 2000 - 0x5800 23FF	Reserved
		0x5800 1C00 - 0x5800 1FFF	Reserved
		0x5800 1400 - 0x5800 17FF	Reserved
		0x5800 0800 - 0x5800 13FF	Reserved
		0x5800 0400 - 0x5800 07FF	SYSCFG
		0x5800 0000 - 0x5800 03FF	EXTI
	AHB3	0x5200 C000 - 0x57FF FFFF	Reserved
		0x5200 BC00 - 0x5200 BFFF	RTDEC1
		0x5200 B800 - 0x5200 BBFF	RTDEC0
		0x5200 B400 - 0x5200 B7FF	OSPIM
		0x5200 B000 - 0x5200 B3FF	Reserved
		0x5200 A000 - 0x5200 AFFF	OSPI1
		0x5200 9400 - 0x5200 9FFF	Reserved
		0x5200 9000 - 0x5200 93FF	RAMECCMU Region 0
		0x5200 8000 - 0x5200 8FFF	CPDM(SDIO0)
		0x5200 7000 - 0x5200 7FFF	SDIO0
		0x5200 6000 - 0x5200 6FFF	Reserved
		0x5200 5000 - 0x5200 5FFF	OSPI0
		0x5200 4000 - 0x5200 4FFF	EXMC
		0x5200 3400 - 0x5200 3FFF	Reserved
		0x5200 3000 - 0x5200 33FF	Reserved
		0x5200 2000 - 0x5200 2FFF	Flash memory interface
		0x5200 1000 - 0x5200 1FFF	IPA
		0x5200 0000 - 0x5200 0FFF	MDMA
		0x5110 0000 - 0x51FF FFFF	Reserved
		0x5100 0000 - 0x510F FFFF	AXI interconnect matrix

Pre-defined Regions	Bus	Address	Peripherals
	APB3	0x5006 1000 - 0x50FF FFFF	Reserved
		0x5006 0C00 - 0x5006 0FFF	Reserved
		0x5006 0800 - 0x5006 0BFF	Reserved
		0x5006 0400 - 0x5006 07FF	Reserved
		0x5006 0000 - 0x5006 03FF	Reserved
		0x5005 0400 - 0x5005 FFFF	Reserved
		0x5005 0000 - 0x5005 03FF	Reserved
		0x5004 0000 - 0x5004 FFFF	Reserved
		0x5000 0000 - 0x5003 FFFF	Reserved
		0x5000 3000 - 0x5000 3FFF	WWDGT
		0x5000 2000 - 0x5000 2FFF	Reserved
		0x5000 1000 - 0x5000 1FFF	TLI
		0x5000 0000 - 0x5000 0FFF	Reserved
	AHB2	0x4802 5000 - 0x4FFF FFFF	Reserved(AHB2)
		0x4802 4800 - 0x4802 4FFF	FAC
		0x4802 4400 - 0x4802 47FF	TMU
		0x4802 4000 - 0x4802 43FF	Reserved
		0x4802 3000 - 0x4802 3FFF	RAMECCMU Region 1
		0x4802 2C00 - 0x4802 2FFF	Reserved(AHB2)
		0x4802 2800 - 0x4802 2BFF	CPDM(SDIO1)
		0x4802 2400 - 0x4802 27FF	SDIO1
		0x4802 1C00 - 0x4802 23FF	Reserved(AHB2)
		0x4802 1800 - 0x4802 1BFF	TRNG
		0x4802 1400 - 0x4802 17FF	HAU
		0x4802 1000 - 0x4802 13FF	CAU
		0x4802 0400 - 0x4802 0FFF	Reserved(AHB2)
		0x4802 0000 - 0x4802 03FF	DCI
		0x4800 1800 - 0x4801 FFFF	Reserved(AHB2)
		0x4800 1400 - 0x4800 17FF	Reserved
		0x4800 1000 - 0x4800 13FF	Reserved
		0x4800 0C00 - 0x4800 0FFF	Reserved
		0x4800 0800 - 0x4800 0BFF	Reserved
		0x4800 0400 - 0x4800 07FF	Reserved
		0x4800 0000 - 0x4800 03FF	Reserved
	AHB1	0x400C 0000 - 0x47FF FFFF	Reserved(AHB1)
		0x4008 0000 - 0x400B FFFF	USBHS1
		0x4004 0000 - 0x4007 FFFF	USBHS0
		0x4003 8C00 - 0x4003 FFFF	Reserved
		0x4003 8400 - 0x4003 8BFF	Reserved
		0x4003 8000 - 0x4003 83FF	Reserved

Pre-defined Regions	Bus	Address	Peripherals
		0x4003 3000 - 0x4003 7FFF	Reserved
		0x4003 0000 - 0x4003 2FFF	Reserved
		0x4002 C000 - 0x4002 FFFF	Reserved
		0x4002 BC00 - 0x4002 BFFF	ENET1
		0x4002 B000 - 0x4002 BBFF	
		0x4002 A000 - 0x4002 AFFF	
		0x4002 8000 - 0x4002 9FFF	ENET0
		0x4002 6800 - 0x4002 7FFF	Reserved
		0x4002 6400 - 0x4002 67FF	Reserved
		0x4002 6000 - 0x4002 63FF	Reserved
		0x4002 5000 - 0x4002 5FFF	Reserved
		0x4002 4000 - 0x4002 4FFF	Reserved
		0x4002 3C00 - 0x4002 3FFF	Reserved
		0x4002 3800 - 0x4002 3BFF	Reserved
		0x4002 3400 - 0x4002 37FF	Reserved
		0x4002 3000 - 0x4002 33FF	Reserved
		0x4002 2C00 - 0x4002 2FFF	Reserved
		0x4002 2800 - 0x4002 2BFF	EFUSE
		0x4002 2400 - 0x4002 27FF	Reserved
		0x4002 2000 - 0x4002 23FF	Reserved
		0x4002 1C00 - 0x4002 1FFF	Reserved
		0x4002 1800 - 0x4002 1BFF	Reserved
		0x4002 1400 - 0x4002 17FF	Reserved
		0x4002 1000 - 0x4002 13FF	Reserved
		0x4002 0C00 - 0x4002 0FFF	Reserved
		0x4002 0800 - 0x4002 0BFF	DMAMUX
		0x4002 0400 - 0x4002 07FF	DMA1
		0x4002 0000 - 0x4002 03FF	DMA0
	APB2	0x4001 F400 - 0x4001 FFFF	Reserved
		0x4001 F000 - 0x4001 F3FF	TIMER44
		0x4001 DC00 - 0x4001 DFFF	TIMER43
		0x4001 D800 - 0x4001 DBFF	TIMER42
		0x4001 D400 - 0x4001 D7FF	TIMER41
		0x4001 D000 - 0x4001 D3FF	TIMER40
		0x4001 C000 - 0x4001 CFFF	CAN2(4KB)
		0x4001 B000 - 0x4001 BFFF	CAN1(4KB)
		0x4001 A000 - 0x4001 AFFF	CAN0(4KB)
		0x4001 8C00 - 0x4001 9FFF	Reserved
		0x4001 8800 - 0x4001 8BFF	EDOUT
		0x4001 8400 - 0x4001 87FF	TRIGSEL

Pre-defined Regions	Bus	Address	Peripherals
		0x4001 8000 - 0x4001 83FF	Reserved(APB2)
		0x4001 7C00 - 0x4001 7FFF	Reserved
		0x4001 7800 - 0x4001 7BFF	Reserved
		0x4001 7400 - 0x4001 77FF	Reserved
		0x4001 7000 - 0x4001 73FF	HPDF
		0x4001 6C00 - 0x4001 6FFF	Reserved
		0x4001 6800 - 0x4001 6BFF	Reserved
		0x4001 6400 - 0x4001 67FF	Reserved
		0x4001 6000 - 0x4001 63FF	SAI2
		0x4001 5C00 - 0x4001 5FFF	SAI1
		0x4001 5800 - 0x4001 5BFF	SAI0
		0x4001 5400 - 0x4001 57FF	Reserved
		0x4001 5000 - 0x4001 53FF	SPI4
		0x4001 4C00 - 0x4001 4FFF	Reserved
		0x4001 4800 - 0x4001 4BFF	TIMER16
		0x4001 4400 - 0x4001 47FF	TIMER15
		0x4001 4000 - 0x4001 43FF	TIMER14
		0x4001 3C00 - 0x4001 3FFF	Reserved
		0x4001 3800 - 0x4001 3BFF	SPI5/I2S5
		0x4001 3400 - 0x4001 37FF	SPI3
		0x4001 3000 - 0x4001 33FF	SPI0/I2S0
		0x4001 2C00 - 0x4001 2FFF	ADC2
		0x4001 2800 - 0x4001 2BFF	ADC1
		0x4001 2400 - 0x4001 27FF	ADC0
		0x4001 2000 - 0x4001 23FF	Reserved
		0x4001 1C00 - 0x4001 1FFF	Reserved
		0x4001 1800 - 0x4001 1BFF	Reserved
		0x4001 1400 - 0x4001 17FF	USART5
		0x4001 1000 - 0x4001 13FF	USART0
		0x4001 0C00 - 0x4001 0FFF	Reserved
		0x4001 0800 - 0x4001 0BFF	Reserved
		0x4001 0400 - 0x4001 07FF	TIMER7
		0x4001 0000 - 0x4001 03FF	TIMER0
	APB1	0x4000 F800 - 0x4000 FFFF	Reserved
		0x4000 F400 - 0x4000 F7FF	TIMER51
		0x4000 F000 - 0x4000 F3FF	TIMER50
		0x4000 EC00 - 0x4000 EFFF	TIMER31
		0x4000 E800 - 0x4000 EBFF	TIMER30
		0x4000 E400 - 0x4000 E7FF	TIMER23
		0x4000 E000 - 0x4000 E3FF	TIMER22

Pre-defined Regions	Bus	Address	Peripherals
		0x4000 DC00 - 0x4000 DFFF	Reserved
		0x4000 D800 - 0x4000 DBFF	Reserved
		0x4000 D400 - 0x4000 D7FF	Reserved
		0x4000 D000 - 0x4000 D3FF	Reserved
		0x4000 CC00 - 0x4000 CFFF	Reserved
		0x4000 C800 - 0x4000 CBFF	Reserved
		0x4000 C400 - 0x4000 C7FF	Reserved
		0x4000 C000 - 0x4000 C3FF	I2C2
		0x4000 9800 - 0x4000 BFFF	Reserved
		0x4000 9400 - 0x4000 97FF	MDIO
		0x4000 8800 - 0x4000 93FF	Reserved
		0x4000 8400 - 0x4000 87FF	CTC
		0x4000 8000 - 0x4000 83FF	Reserved
		0x4000 7C00 - 0x4000 7FFF	UART7
		0x4000 7800 - 0x4000 7BFF	UART6
		0x4000 7400 - 0x4000 77FF	DAC
		0x4000 7000 - 0x4000 73FF	Reserved
		0x4000 6C00 - 0x4000 6FFF	Reserved
		0x4000 6800 - 0x4000 6BFF	Reserved
		0x4000 6400 - 0x4000 67FF	Reserved
		0x4000 6000 - 0x4000 63FF	Reserved
		0x4000 5C00 - 0x4000 5FFF	I2C3
		0x4000 5800 - 0x4000 5BFF	I2C1
		0x4000 5400 - 0x4000 57FF	I2C0
		0x4000 5000 - 0x4000 53FF	UART4
		0x4000 4C00 - 0x4000 4FFF	UART3
		0x4000 4800 - 0x4000 4BFF	USART2
		0x4000 4400 - 0x4000 47FF	USART1
		0x4000 4000 - 0x4000 43FF	RSPDIF
		0x4000 3C00 - 0x4000 3FFF	SPI2/I2S2
		0x4000 3800 - 0x4000 3BFF	SPI1/I2S1
		0x4000 3400 - 0x4000 37FF	Reserved
		0x4000 3000 - 0x4000 33FF	Reserved
		0x4000 2C00 - 0x4000 2FFF	Reserved
		0x4000 2800 - 0x4000 2BFF	Reserved
		0x4000 2400 - 0x4000 27FF	Reserved
		0x4000 2000 - 0x4000 23FF	Reserved
		0x4000 1C00 - 0x4000 1FFF	Reserved
		0x4000 1800 - 0x4000 1BFF	Reserved
		0x4000 1400 - 0x4000 17FF	TIMER6

Pre-defined Regions	Bus	Address	Peripherals
		0x4000 1000 - 0x4000 13FF	TIMER5
		0x4000 0C00 - 0x4000 0FFF	TIMER4
		0x4000 0800 - 0x4000 0BFF	TIMER3
		0x4000 0400 - 0x4000 07FF	TIMER2
		0x4000 0000 - 0x4000 03FF	TIMER1
SRAM		0x3880 1000 - 0x3FFF FFFF	Reserved
		0x3880 0000 - 0x3880 0FFF	Backup SRAM
		0x3000 8000 - 0x387F FFFF	Reserved
		0x3000 4000 - 0x3000 7FFF	SRAM1(16KB)
		0x3000 0000 - 0x3000 3FFF	SRAM0(16KB)
		0x2410 0000 - 0x2FFF FFFF	Reserved
		0x2408 0000 - 0x240F FFFF	RAM(512KB) shared (ITCM/DTCM/AXI)
		0x2400 0000 - 0x2407 FFFF	AXI SRAM(512KB)
		0x2008 0000 - 0x23FF FFFF	Reserved
		0x2007 0000 - 0x2007 FFFF	DTCM RAM(from RAM shared)
		0x2006 0000 - 0x2006 FFFF	
		0x2003 0000 - 0x2005 FFFF	
		0x2002 0000 - 0x2002 FFFF	
		0x2001 C000 - 0x2001 FFFF	
		0x2001 8000 - 0x2001 BFFF	
		0x2001 0000 - 0x2001 7FFF	
		0x2000 D000 - 0x2000 FFFF	
		0x2000 C000 - 0x2000 CFFF	
		0x2000 8000 - 0x2000 BFFF	
		0x2000 5000 - 0x2000 7FFF	
		0x2000 2000 - 0x2000 4FFF	
		0x2000 1000 - 0x2000 1FFF	
		0x2000 0000 - 0x2000 0FFF	
Code		0x1FFF FC10 - 0x1FFF FFFF	Reserved
		0x1FFF FC00 - 0x1FFF FC0F	Reserved
		0x1FFF F818 - 0x1FFF BFFF	Reserved
		0x1FFF F800 - 0x1FFF F817	Reserved
		0x1FFF F000 - 0x1FFF F7FF	Reserved
		0x1FFF EC00 - 0x1FFF EFFF	Reserved
		0x1FFF C010 - 0x1FFF EBFF	Reserved
		0x1FFF C000 - 0x1FFF C00F	Reserved
		0x1FFF B000 - 0x1FFF BFFF	Reserved
		0x1FFF 8000 - 0x1FFF AFFF	Reserved
		0x1FFF 7A10 - 0x1FFF 7FFF	Reserved

Pre-defined Regions	Bus	Address	Peripherals
		0x1FFF 7800 - 0x1FFF 7A0F	Reserved
		0x1FFF 7400 - 0x1FFF 77FF	Reserved
		0x1FFF 7000 - 0x1FFF 73FF	Reserved
		0x1FFF 0000 - 0x1FFF 6FFF	Reserved
		0x1FFE C010 - 0x1FFE FFFF	Reserved
		0x1FFE C000 - 0x1FFE C00F	Reserved
		0x1FF6 0000 - 0x1FFE BFFF	Reserved
		0x1FF4 0000 - 0x1FF5 FFFF	Reserved
		0x1FF1 0000 - 0x1FF3 FFFF	Reserved
		0x1FF0 0000 - 0x1FF0 FFFF	System Memory
		0x1002 0000 - 0x1FEF FFFF	Reserved
		0x1001 0000 - 0x1001 FFFF	Reserved
		0x1000 0000 - 0x1000 FFFF	Reserved
		0x0A00 D000 - 0x0FFF FFFF	Reserved
		0x0A00 C000 - 0x0A00 CFFF	Reserved
		0x0A00 8000 - 0x0A00 BFFF	Reserved
		0x0A00 0000 - 0x0A00 7FFF	Reserved
		0x08C0 1000 - 0x09FF FFFF	Reserved
		0x08C0 0000 - 0x08C0 0FFF	Reserved
		0x0881 0000 - 0x08BF FFFF	Reserved
		0x0880 0000 - 0x0880 FFFF	Reserved
		0x0840 0000 - 0x087F FFFF	Reserved
		0x083C 0000 - 0x083F FFFF	Reserved
		0x0830 0000 - 0x083B FFFF	Flash memory
		0x0810 0000 - 0x082F FFFF	
		0x0808 0000 - 0x080F FFFF	
		0x0806 0000 - 0x0807 FFFF	
		0x0802 0000 - 0x0805 FFFF	
		0x0801 0000 - 0x0801 FFFF	
		0x0800 0000 - 0x0800 FFFF	
		0x0030 0000 - 0x07FF FFFF	Reserved
		0x0010 0000 - 0x002F FFFF	Reserved
		0x0008 0000 - 0x000F FFFF	Reserved
		0x0002 6000 - 0x0007 FFFF	ITCM RAM(from RAM shared)
		0x0002 0000 - 0x0002 5FFF	
		0x0001 0000 - 0x0001 FFFF	
		0x0000 0000 - 0x0000 FFFF	

1.3.1. On-chip SRAM memory

The devices of GD32H7xx series contain up to 512KB of on-chip SRAM (AXI SRAM), 4KB of backup SRAM and up to 512KB RAM shared by ITCM/DTCM/AXI SRAM. All of AHB SRAM support byte, half-word (16 bits), and word (32 bits) accesses. The on-chip SRAM (AXI SRAM) support byte, half-word (16 bits), word (32 bits) and double words (64 bits) accesses. SRAM0 and SRAM1 can be accessed by almost all AHB masters. The backup SRAM (BKPSRAM) is implemented in the backup domain, which can keep its content even when the V_{DD} power supply is down.

ITCM/DTCM SRAM access frequency

If TCM_WAITSTATE in SYSCFG_SRAMCFG1 register is set to 0, the corresponding TCM SRAM can be accessed below a maximum frequency of f_{tww} which can be referred to the datasheet. TCM_WAITSTATE is set to 0 after system reset.

ITCM/DTCM SRAM ECC function

The TCM ECC function (ITCMECCEN / DTCM0ECCEN / DTCM1ECCEN) can be enabled to increase the robustness.

AXI SRAM

The on-chip SRAM (AXI SRAM) controller is consisted of read and write control module, MUX, decoder and SRAM controllers. There is an arbiter with round-robin scheme for each SRAM controller. The block digram is shown in ***Figure 1-6. Block digram of AXI SRAM controller***.

Figure 1-6. Block digram of AXI SRAM controller

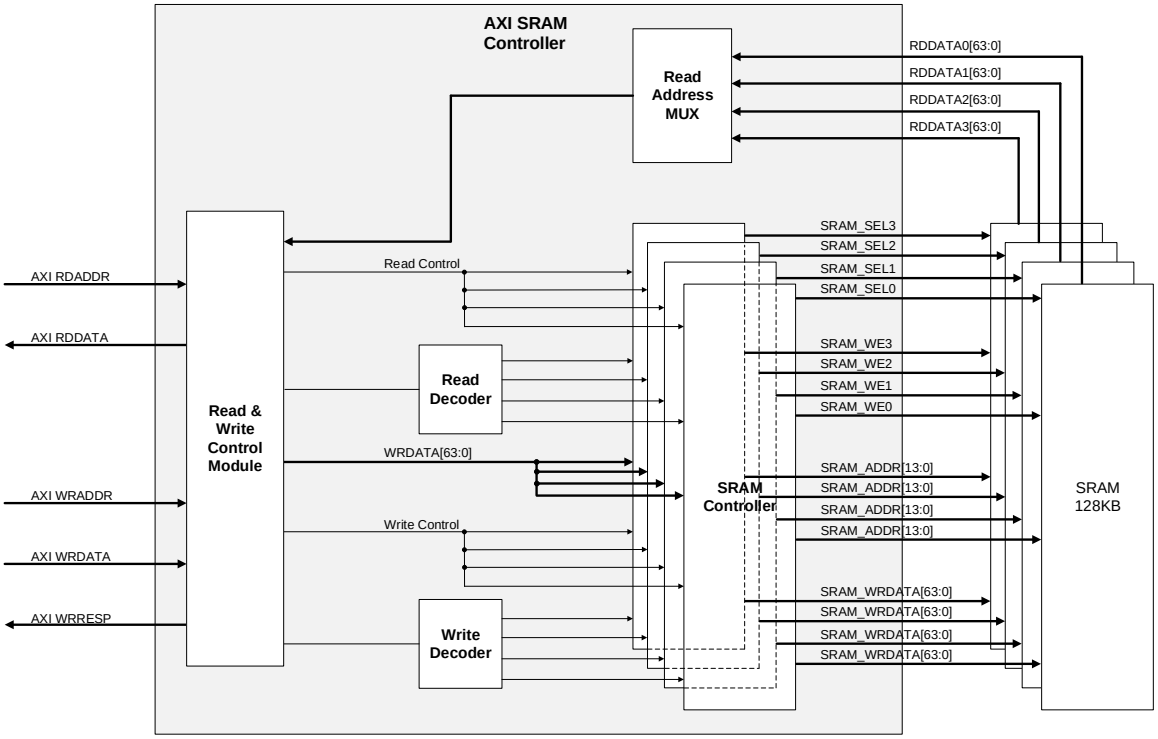

RAM shared by ITCM/DTCM/AXI SRAM

512KB of RAM can be used by ITCM or DTCM or AXI SRAM, which can be configured through ITCM_SZ_SHRRAM and DTCM_SZ_SHRRAM bits in option byte status register 1 register, as described in ***Table 1-3. Configuration of ITCM/DTCM/AXI SRAM***. And the block digram is shown in ***Figure 1-7. Block digram of RAM shared by ITCM/DTCM/AXI SRAM***.

Figure 1-7. Block digram of RAM shared by ITCM/DTCM/AXI SRAM

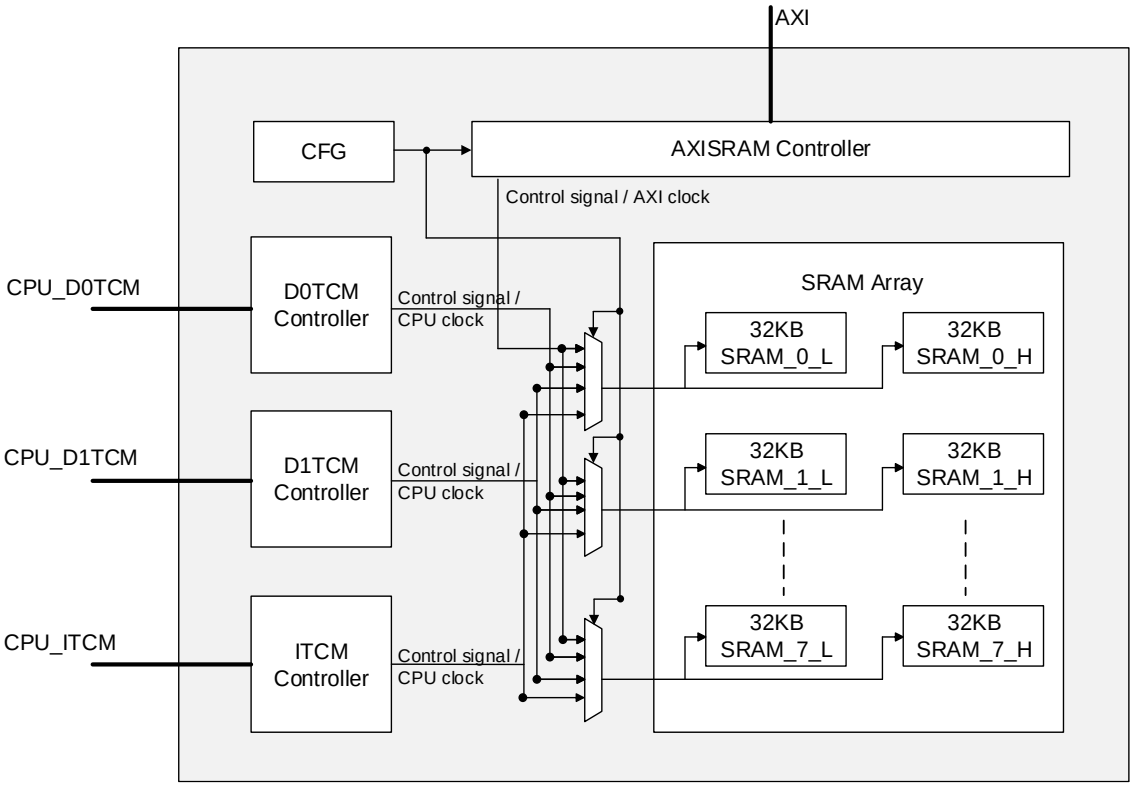

The total capacity of ITCM, DTCM, and AXI SRAM is 512KB, of which ITCM configuration takes priority, DTCM configuration takes the second place, and the rest is the shared SRAM.

Table 1-3. Configuration of ITCM/DTCM/AXI SRAM

ITCM_SZ_SHRRAM[3:0]	DTCM_SZ_SHRRAM[3:0]	ITCM size(KB)	DTCM size(KB)	AXI SRAM size(KB)
0000	0000	0	0	512
0000	0111	0	64	448
0000	1000	0	128	384
0000	1001	0	256	256
0000	1010	0	512	0
0111	0000	64	0	448
0111	0111	64	64	384
0111	1000	64	128	320
0111	1001	64	256	192
1000	0000	128	0	384
1000	0111	128	64	320
1000	1000	128	128	256

1000	1001	128	256	128
1001	0000	256	0	256
1001	0111	256	64	192
1001	1000	256	128	128
1001	1001	256	256	0
1010	0000	512	0	0

1.3.2. On-chip flash memory overview

The devices provide high density on-chip flash memory, which is organized as follows:

- Up to 3840KB of main flash memory
- Up to 64KB of information blocks for the boot loader
- Option bytes to configure the device

Refer to ***Flash Memory Controller (FMC)*** Chapter for more details.

1.4. Boot configuration

The GD32H7xx devices provide different boot sources which can be selected by the BOOT pin and BOOT_ADDR0/1[15:0] in Boot address for Arm® Cortex®-M7 core register (FMC_BTADDR_MDF). The details are shown in ***Table 1-4. Boot mode selection*** and ***Table 1-5. Details of Boot mode***.

The value on the BOOT pin is latched on the 4th rising edge of CK_SYS after a reset. It is up to the user to set the BOOT pin after a power-on reset or a system reset to select the required boot source. Once the BOOT pin has been sampled, it is free and can be used for other purposes. The BOOT_ADDR0[15:0] and BOOT_ADDR1[15:0] address allows to configure the boot memory address to any address from 0x0000 0000 to 0x9000 0000. The boot mode can be obtained from the BOOT_MODE[2:0] bits in the SYSCFG_USERCFG register.

Table 1-4. Boot mode selection

Boot source address	Boot mode selection pin
	BOOT
MSB of the boot address: defined by BOOT_ADDR0[15:0] LSB of the boot address: 0x0000	0
MSB of the boot address: defined by BOOT_ADDR1[15:0] LSB of the boot address: 0x0000	1

Table 1-5. Details of Boot mode

SCR	SPC[7:0]	BOOT_ADDRESS (configured in BOOT_ADDRx(x = 0,1))	BOOT_MODE	Boot from
1	x	XXXX	SECURITY BOOT	ROM
0	Protection level high	0x9000_0000	USER BOOT	OSPI0
		0x7000_0000	USER BOOT	OSPI1
		0x0800_0000~max user flash	USER BOOT	BOOT_ADDRESS
		other	USER BOOT	0x0800_0000
	No protection / Protection level low	0x9000_0000	USER BOOT	OSPI0
		0x7000_0000	USER BOOT	OSPI1
		0x2408_0000~ max RAM shared(ITCM/DTCM/AXI)	SRAM BOOT(RAM shared)	BOOT_ADDRESS
		0x2400_0000~ max AXI SRAM	SRAM BOOT(AXI SRAM)	BOOT_ADDRESS
		0x2000_0000	SRAM BOOT(DTCM)	0x2000_0000
		0x0800_0000~max user flash	USER BOOT	BOOT_ADDRESS
		0x0000_0000	SRAM BOOT(ITCM)	0x0000_0000
		0x1FF0_0000	SYSTEM BOOT	BootLoader
		Other	USER BOOT	0x0800_0000(BOOT Pin = 0)
			SYSTEM BOOT	BootLoader(BOOT Pin = 1)

The embedded bootloader supports multi interfaces to update the Flash memory. There will be USART ports, USBHS ports, SDIO ports can be used on GD32H7xx line products. The details are shown in the datasheet.

1.5. System configuration controller (SYSCFG)

The system configuration controller main functions are the following:

- Analog switch configuration management
- I2C Fm+ configuration
- Selection of the Ethernet PHY interface.
- Management of the external interrupt line connection to the GPIOs
- Management of the I/O compensation cell
- Management BOR reset level
- Management timer break input lock.

1.6. Timer break input lock

When internal SRAM/FMC ECC error, LVD or CPU core lockup occurs, this function allows to disable TIMER output. Refer to ***Lockup control register (SYSCFG_LKCTL)*** for details.

1.7. AXI interconnect matrix (AXIIM)

The AXI interconnect is based on the Arm® CoreLink™ NIC-400 Network Interconnect. It has 6 initiator ports or ASIBs (AMBA slave interface blocks), and 8 target ports or AMIBs (AMBA master interface blocks).

1.7.1. Characteristics

The main functions of AXI interconnect matrix are the following:

- 64-bit AXI bus switch matrix with 6 ASIBs and 8 AMIBs
- Distributed Global Programmers View (GPV)
- Programmable Quality of Service (QoS)

1.7.2. Function overview

The block diagram of AXI interconnect matrix is shown in ***Figure 1-8. Block diagram of AXI interconnect matrix***.

Figure 1-8. Block diagram of AXI interconnect matrix

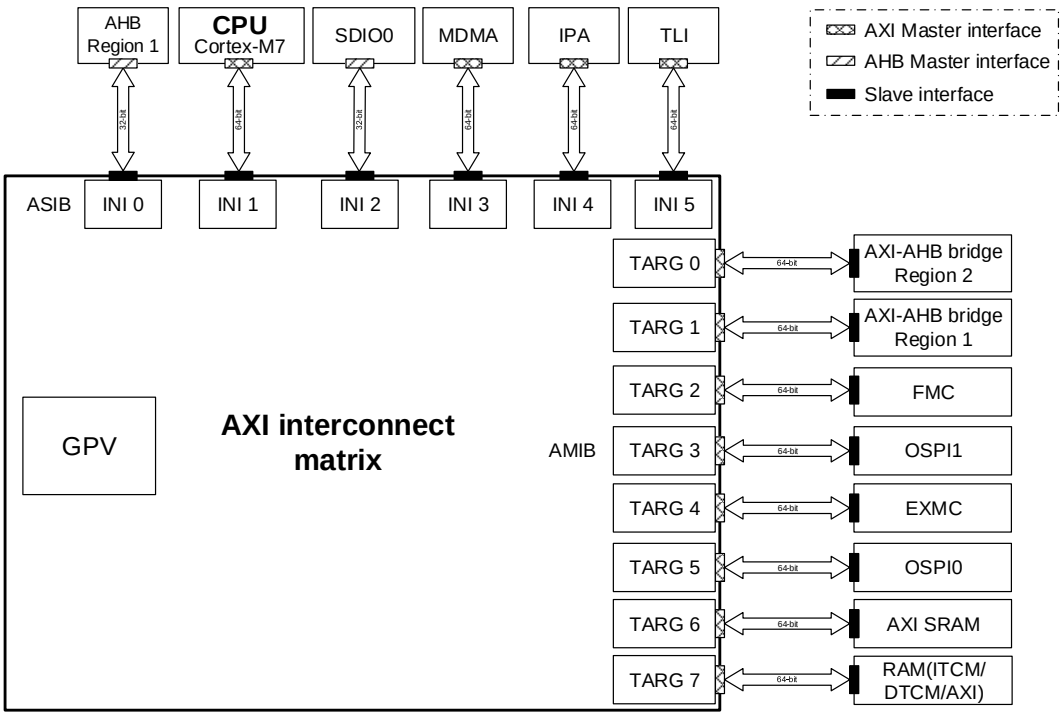

The configurations of ASIB and AMIB are shown in ***Table 1-6. Configuration of ASIBs*** and ***Table 1-7. Configuration of AMIBs***.

Table 1-6. Configuration of ASIBs

ASIB	Protocol	Bus width	Read issuing	Write issuing	Master interface
INI 0	AHB-lite	32	1	1	AHB Region 1
INI 1	AXI4	64	7	32	CPU Cortex-M7
INI 2	AHB-lite	32	1	1	SDIO0
INI 3	AXI4	64	4	1	MDMA
INI 4	AXI4	64	3	1	IPA
INI 5	AXI4	64	1	1	TLI

Table 1-7. Configuration of AMIBs

AMIB	Protocol	Bus width	Read acceptance	Write acceptance	Total acceptance	Slave interface
TARG 0	AXI4	32	1	1	1	AHB3 Peripherals and Region 2
TARG 1	AXI4	32	1	1	1	Region 1
TARG 2	AXI4	64	3	2	5	FMC
TARG 3	AXI4	64	2	1	3	OSPI1
TARG 4	AXI4	64	3	3	6	EXMC
TARG 5	AXI4	64	2	1	3	OSPI0
TARG 6	AXI4	64	2	2	2	AXI SRAM
TARG 7	AXI4	64	2	2	2	RAM shared (ITCM/DTCM/AXI SRAM)

Quality of Service (QoS)

Using QoS provides configurable QoS options for ASIB and AMIB, regulation of read and write requests and programmable QoS facilities for attached AMBA masters. The AXI interconnect matrix uses priority based arbitration when different ASIBs try to access a AMIB. The ASIB has configurable read and write channel priority. The priority range is 0x0 ~ 0xF and 0 is the lowest priority. Refer to register ***AXI Slave Port x read QOS control register (AXI_SPx_RDQOS_CTL)*** and ***AXI Slave Port x write QOS control register (AXI_SPx_WRQOS_CTL)*** for details. Least recently used (LRU) priority scheme is used when the priorities of different ASIBs are the same.

Global Programmers View (GPV)

Global Programmers View (GPV) for the entire interconnect that is configurable so that any master, or a discrete configuration slave interface, can access it. For more information, see the Arm® CoreLink™ QoS-400 Network Interconnect Advanced Quality of Service, Supplement to Arm® CoreLink™ NIC-400 Network Interconnect Technical Reference Manual.

1.8. System configuration registers

SYSCFG base address: 0x5800 0400

1.8.1. Peripheral mode configuration register (SYSCFG_PMCFG)

Address offset: 0x004

Reset value: 0x0F00 0000

This register has to be accessed by word (32-bit).

31	30	29	28	27	26	25	24	23	22	21	20	19	18	17	16
Reserved				PC3SWON	PC2SWON	PA1SWON	PA0SWON	ENET0_PHY_SEL	ENET1_PHY_SEL	Reserved					
				rw	rw	rw	rw	rw	rw						

15	14	13	12	11	10	9	8	7	6	5	4	3	2	1	0
Reserved								PB9FMPEN	PB8FMPEN	PB7FMPEN	PB6FMPEN	I2C3FMPEN	I2C2FMPEN	I2C1FMPEN	I2C0FMPEN
								rw	rw	rw	rw	rw	rw	rw	rw

Bits	Fields	Descriptions
31:28	Reserved	Must be kept at reset value.
27	PC3SWON	PC3 switch open This bit controls the analog switch between PC3 and PC3_C, which determines the pads are conneted or separated. 0: Close analog switch 1: Open analog switch (2 pads are separated pads)
26	PC2SWON	PC2 switch open This bit controls the analog switch between PC2 and PC2_C, which determines the pads are conneted or separated. 0: Close analog switch 1: Open analog switch (2 pads are separated pads)
25	PA1SWON	PA1 switch open This bit controls the analog switch between PA1 and PA1_C, which determines the pads are conneted or separated. 0: Close analog switch 1: Open analog switch (2 pads are separated pads)
24	PA0SWON	PA0 switch open This bit controls the analog switch between PA0 and PA0_C, which determines the pads are conneted or separated. 0: Close analog switch 1: Open analog switch (2 pads are separated pads)
23	ENET0_PHY_SEL	Ethernet0 PHY interface selection

		This bit selects the Ethernet PHY interface. 0: MII is selected 1: RMII is selected
22	ENET1_PHY_SEL	Ethernet1 PHY interface selection This bit selects the Ethernet PHY interface. 0: MII is selected 1: RMII is selected
21:8	Reserved	Must be kept at reset value.
7	PB9FMPEN	I2C Fm+ mode on PB9 pin enable This bit controls I2C Fm+ mode, the speed control of the pin is bypassed. 0: Disable Fm+ mode 1: Enable Fm+ mode
6	PB8FMPEN	I2C Fm+ mode on PB8 pin enable This bit controls I2C Fm+ mode, the speed control of the pin is bypassed. 0: Disable Fm+ mode 1: Enable Fm+ mode
5	PB7FMPEN	I2C Fm+ mode on PB7 pin enable This bit controls I2C Fm+ mode, the speed control of the pin is bypassed. 0: Disable Fm+ mode 1: Enable Fm+ mode
4	PB6FMPEN	I2C Fm+ mode on PB6 pin enable This bit controls I2C Fm+ mode, the speed control of the pin is bypassed. 0: Disable Fm+ mode 1: Enable Fm+ mode
3	I2C3FMPEN	I2C3 Fm+ mode enable This bit controls I2C3 Fm+ mode. 0: Disable Fm+ mode 1: Enable Fm+ mode
2	I2C2FMPEN	I2C2 Fm+ mode enable This bit controls I2C2 Fm+ mode. 0: Disable Fm+ mode 1: Enable Fm+ mode
1	I2C1FMPEN	I2C1 Fm+ mode enable This bit controls I2C1 Fm+ mode. 0: Disable Fm+ mode 1: Enable Fm+ mode
0	I2C0FMPEN	I2C0 Fm+ mode enable This bit controls I2C0 Fm+ mode. 0: Disable Fm+ mode

1: Enable Fm+ mode

1.8.2. EXTI sources selection register 0 (SYSCFG_EXTISS0)

Address offset: 0x008

Reset value: 0x0000 0000

This register has to be accessed by word (32-bit).

31	30	29	28	27	26	25	24	23	22	21	20	19	18	17	16
Reserved															

15	14	13	12	11	10	9	8	7	6	5	4	3	2	1	0
EXTI3_SS[3:0]				EXTI2_SS[3:0]				EXTI1_SS[3:0]				EXTI0_SS[3:0]			
rw				rw				rw				rw			

Bits	Fields	Descriptions
31:16	Reserved	Must be kept at reset value.
15:12	EXTI3_SS[3:0]	EXTI 3 sources selection 0000: PA3 pin 0001: PB3 pin 0010: PC3 pin 0011: PD3 pin 0100: PE3 pin 0101: PF3 pin 0110: PG3 pin 0111: PH3 pin
11:8	EXTI2_SS[3:0]	EXTI 2 sources selection 0000: PA2 pin 0001: PB2 pin 0010: PC2 pin 0011: PD2 pin 0100: PE2 pin 0101: PF2 pin 0110: PG2 pin 0111: PH2 pin 1010: PK2 pin
7:4	EXTI1_SS[3:0]	EXTI 1 sources selection 0000: PA1 pin 0001: PB1 pin 0010: PC1 pin 0011: PD1 pin 0100: PE1 pin

		0101: PF1 pin 0110: PG1 pin 0111: PH1 pin 1010: PK1 pin
3:0	EXTI0_SS[3:0]	EXTI 0 sources selection 0000: PA0 pin 0001: PB0 pin 0010: PC0 pin 0011: PD0 pin 0100: PE0 pin 0101: PF0 pin 0110: PG0 pin 0111: PH0 pin 1010: PK0 pin

1.8.3. EXTI sources selection register 1 (SYSCFG_EXTISS1)

Ad Address offset: 0x00C

Reset value: 0x0000 0000

This register has to be accessed by word (32-bit).

31	30	29	28	27	26	25	24	23	22	21	20	19	18	17	16
Reserved															

15	14	13	12	11	10	9	8	7	6	5	4	3	2	1	0
EXTI7_SS[3:0]				EXTI6_SS[3:0]				EXTI5_SS[3:0]				EXTI4_SS[3:0]			
rw				rw				rw				rw			

Bits	Fields	Descriptions
31:16	Reserved	Must be kept at reset value.
15:12	EXTI7_SS[3:0]	EXTI 7 sources selection 0000: PA7 pin 0001: PB7 pin 0010: PC7 pin 0011: PD7 pin 0100: PE7 pin 0101: PF7 pin 0110: PG7 pin 0111: PH7 pin
11:8	EXTI6_SS[3:0]	EXTI 6 sources selection 0000: PA6 pin 0001: PB6 pin

		0010: PC6 pin 0011: PD6 pin 0100: PE6 pin 0101: PF6 pin 0110: PG6 pin 0111: PH6 pin
7:4	EXTI5_SS[3:0]	EXTI 5 sources selection 0000: PA5 pin 0001: PB5 pin 0010: PC5 pin 0011: PD5 pin 0100: PE5 pin 0101: PF5 pin 0110: PG5 pin 0111: PH5 pin
3:0	EXTI4_SS[3:0]	EXTI 4 sources selection 0000: PA4 pin 0001: PB4 pin 0010: PC4 pin 0011: PD4 pin 0100: PE4 pin 0101: PF4 pin 0110: PG4 pin 0111: PH4 pin

1.8.4. EXTI sources selection register 2 (SYSCFG_EXTISS2)

Address offset: 0x010

Reset value: 0x0000 0000

This register has to be accessed by word (32-bit).

31	30	29	28	27	26	25	24	23	22	21	20	19	18	17	16
Reserved															

15	14	13	12	11	10	9	8	7	6	5	4	3	2	1	0
EXTI11_SS[3:0]				EXTI10_SS[3:0]				EXTI9_SS[3:0]				EXTI8_SS[3:0]			
rw				rw				rw				rw			

Bits	Fields	Descriptions
31:16	Reserved	Must be kept at reset value.
15:12	EXTI11_SS[3:0]	EXTI 11 sources selection 0000: Reserved

		0001: PB11 pin 0010: PC11 pin 0011: PD11 pin 0100: PE11 pin 0101: PF11 pin 0110: PG11 pin 0111: PH11 pin 1001: PJ11 pin
11:8	EXTI10_SS[3:0]	EXTI 10 sources selection 0000: PA10 pin 0001: PB10 pin 0010: PC10 pin 0011: PD10 pin 0100: PE10 pin 0101: PF10 pin 0110: PG10 pin 0111: PH10 pin 1001: PJ10 pin
7:4	EXTI9_SS[3:0]	EXTI 9 sources selection 0000: PA9 pin 0001: PB9 pin 0010: PC9 pin 0011: PD9 pin 0100: PE9 pin 0101: PF9 pin 0110: PG9 pin 0111: PH9 pin 1001: PJ9 pin
3:0	EXTI8_SS[3:0]	EXTI 8 sources selection 0000: PA8 pin 0001: PB8 pin 0010: PC8 pin 0011: PD8 pin 0100: PE8 pin 0101: PF8 pin 0110: PG8 pin 0111: PH8 pin 1001: PJ8 pin

1.8.5. EXTI sources selection register 3 (SYSCFG_EXTISS3)

Address offset: 0x014

Reset value: 0x0000 0000

This register has to be accessed by word (32-bit).

31	30	29	28	27	26	25	24	23	22	21	20	19	18	17	16
Reserved															

15	14	13	12	11	10	9	8	7	6	5	4	3	2	1	0
EXTI15_SS[3:0]				EXTI14_SS[3:0]				EXTI13_SS[3:0]				EXTI12_SS[3:0]			
rw				rw				rw				rw			

Bits	Fields	Descriptions
31:16	Reserved	Must be kept at reset value.
15:12	EXTI15_SS[3:0]	EXTI 15 sources selection 0000: PA15 pin 0001: PB15 pin 0010: PC15 pin 0011: PD15 pin 0100: PE15 pin 0101: PF15 pin 0110: PG15 pin 0111: PH15 pin
11:8	EXTI14_SS[3:0]	EXTI 14 sources selection 0000: PA14 pin 0001: PB14 pin 0010: PC14 pin 0011: PD14 pin 0100: PE14 pin 0101: PF14 pin 0110: PG14 pin 0111: PH14 pin
7:4	EXTI13_SS[3:0]	EXTI 13 sources selection 0000: PA13 pin 0001: PB13 pin 0010: PC13 pin 0011: PD13 pin 0100: PE13 pin 0101: PF13 pin 0110: PG13 pin 0111: PH13 pin
3:0	EXTI12_SS[3:0]	EXTI 12 sources selection 0000: Reserved 0001: PB12 pin

0010: PC12 pin
0011: PD12 pin
0100: PE12 pin
0101: PF12 pin
0110: PG12 pin
0111: PH12 pin

1.8.6. Lockup control register (SYSCFG_LKCTL)

Address offset: 0x018
Reset value: 0x0000 0000

This register has to be accessed by word (32-bit).

31	30	29	28	27	26	25	24	23	22	21	20	19	18	17	16
Reserved															

15	14	13	12	11	10	9	8	7	6	5	4	3	2	1	0
AXIRAM_LOCK	ITCM_LOCK	DTCM_LOCK	SRAM0_LOCK	SRAM1_LOCK	Reserved			BKPRAM_LOCK	CPU_LOCK	Reserved			LVD_LOCK	Reserved	
rw	rw	rw	rw	rw				rw	rw				rw		

Bits	Fields	Descriptions
31:16	Reserved	Must be kept at reset value.
15	AXIRAM_LOCK	Region 0 AXI-SRAM ECC double error lock bit This bit is set by software and cleared by a system reset. 0: Region 0 AXI-SRAM ECC double error signal is disconnected from the break input of TIMER0/7/14/15/16 1: Region 0 AXI-SRAM ECC double error signal is connected from the break input of TIMER0/7/14/15/16
14	ITCM_LOCK	Region 0 ITCM-RAM ECC double error lock bit This bit is set by software and cleared by a system reset. 0: Region 0 ITCM-RAM ECC double error signal is disconnected from the break input of TIMER0/7/14/15/16 1: Region 0 ITCM-RAM ECC double error signal is connected from the break input of TIMER0/7/14/15/16
13	DTCM_LOCK	Region 0 DTCM ECC double error lock bit This bit is set by software and cleared by a system reset. 0: Region 0 DTCM ECC double error signal is disconnected from the break input of TIMER0/7/14/15/16 1: Region 0 DTCM ECC double error signal is connected from the break input of TIMER0/7/14/15/16
12	SRAM0_LOCK	Region 1 SRAM0 ECC double error lockup bit

		This bit is set by software and cleared by a system reset. 0: Region 1 SRAM0 ECC double error signal is disconnected from the break input of TIMER0/7/14/15/16 1: Region 1 SRAM0 ECC double error signal is connected from the break input of TIMER0/7/14/15/16
11	SRAM1_LOCK	Region 1 SRAM1 ECC double error lockup bit This bit is set by software and cleared by a system reset. 0: Region 1 SRAM1 ECC double error signal is disconnected from the break input of TIMER0/7/14/15/16 1: Region 1 SRAM1 ECC double error signal is connected from the break input of TIMER0/7/14/15/16
10:8	Reserved	Must be kept at reset value.
7	BKPRAM_LOCK	Region 2 backup SRAM ECC double error lockup bit This bit is set by software and cleared by a system reset. 0: Region 2 backup SRAM ECC double error signal is disconnected from the break input of TIMER0/7/14/15/16 1: Region 2 backup SRAM ECC double error signal is connected from the break input of TIMER0/7/14/15/16
6	CPU_LOCK	CPU lockup bit This bit is set by software and cleared by a system reset. 0: CPU lockup signal is disconnected from the break input of TIMER0/7/14/15/16 1: CPU lockup signal is connected from the break input of TIMER0/7/14/15/16
5:3	Reserved	Must be kept at reset value.
2	LVD_LOCK	Low voltage detector lockup bit This bit is set by software and cleared by a system reset. 0: LVD signal is disconnected from the break input of TIMER0/7/14/15/16 1: LVD signal is connected from the break input of TIMER0/7/14/15/16
1:0	Reserved	Must be kept at reset value.

1.8.7. I/O compensation control register (SYSCFG_CPSCTL)

Address offset: 0x020

Reset value: 0x00X0 0000

This register has to be accessed by word (32-bit).

31	30	29	28	27	26	25	24	23	22	21	20	19	18	17	16
Reserved								IOLV	Reserved						IOSPDOP
								r							rw

15	14	13	12	11	10	9	8	7	6	5	4	3	2	1	0
Reserved							CPS_RDY	Reserved							CPS_EN

r rw

Bits	Fields	Descriptions
31:24	Reserved	Must be kept at reset value.
23	IOLV	I/O in low voltage state 0: Product supply voltage is working higher than 2.5V 1: Product supply voltage is working below 2.5V
22:17	Reserved	Must be kept at reset value.
16	IOSPDOP	I/O speed optimization, High-speed at low-voltage This bit is written by software to optimize the I/O speed when the product voltage is low. It must be used only if the product supply voltage is below 2.5V (IOLV bit is '1'). Setting this bit when V_{DD} is higher than 2.5V might be destructive. 0: No I/O speed optimization 1: I/O speed optimization
15:9	Reserved	Must be kept at reset value.
8	CPS_RDY	Compensation cell ready flag This bit provides the status of the compensation cell. 0: I/O compensation cell not ready 1: I/O compensation cell ready
7:1	Reserved	Must be kept at reset value.
0	CPS_EN	I/O compensation cell enable This bit enables the I/O compensation cell. 0: I/O compensation cell disabled 1: I/O compensation cell enabled

1.8.8. I/O compensation cell code configuration register (SYSCFG_CPSCCCFG)

Address offset: 0x028

Reset value: 0x0000 0088

This register has to be accessed by word (32-bit).

31	30	29	28	27	26	25	24	23	22	21	20	19	18	17	16
Reserved															

15	14	13	12	11	10	9	8	7	6	5	4	3	2	1	0
Reserved								PCPSCC[3:0]				NCPSCC[3:0]			
								rw				rw			

Bits	Fields	Descriptions
31:8	Reserved	Must be kept at reset value.
7:4	PCPSCC[3:0]	PMOS compensation cell code These bits define I/O compensation cell code for PMOS transistors.
3:0	NCPSCC[3:0]	NMOS compensation cell code These bits define I/O compensation cell code for NMOS transistors.

1.8.9. Timer input selection register 0 (SYSCFG_TIMERCISEL0)

Address offset: 0x034

Reset value: 0x0000 0000

This register has to be accessed by word (32-bit).

31	30	29	28	27	26	25	24	23	22	21	20	19	18	17	16
TIMER0_CI3_SEL[3:0]				TIMER0_CI2_SEL[3:0]				TIMER0_CI1_SEL[3:0]				TIMER0_CI0_SEL[3:0]			
rw				rw				rw				rw			

15	14	13	12	11	10	9	8	7	6	5	4	3	2	1	0
TIMER7_CI3_SEL[3:0]				TIMER7_CI2_SEL[3:0]				TIMER7_CI1_SEL[3:0]				TIMER7_CI0_SEL[3:0]			
rw				rw				rw				rw			

Bits	Fields	Descriptions
31:28	TIMER0_CI3_SEL[3:0]	Selects TIMER0_CI3 input selection These bits select the TIMER input source. 0000: TIMER0_CH3 input Others: Reserved
27:24	TIMER0_CI2_SEL[3:0]	Selects TIMER0_CI2 input selection These bits select the TIMER input source. 0000: TIMER0_CH2 input Others: Reserved
23:20	TIMER0_CI1_SEL[3:0]	Selects TIMER0_CI1 input selection These bits select the TIMER input source. 0000: TIMER0_CH1 input Others: Reserved
19:16	TIMER0_CI0_SEL[3:0]	Selects TIMER0_CI0 input selection These bits select the TIMER input source. 0000: TIMER0_CH0 input 0001: CMP0 output Others: Reserved
15:12	TIMER7_CI3_SEL[3:0]	Selects TIMER7_CI3 input selection These bits select the TIMER input source. 0000: TIMER7_CH3 input

		Others: Reserved
11:8	TIMER7_CI2_SEL[3:0]	Selects TIMER7_CI2 input selection These bits select the TIMER input source. 0000: TIMER7_CH2 input Others: Reserved
7:4	TIMER7_CI1_SEL[3:0]	Selects TIMER7_CI1 input selection These bits select the TIMER input source. 0000: TIMER7_CH1 input Others: Reserved
3:0	TIMER7_CI0_SEL[3:0]	Selects TIMER7_CI0 input selection These bits select the TIMER input source. 0000: TIMER7_CH0 input 0001: CMP1 output Others: Reserved

1.8.10. Timer input selection register 1 (SYSCFG_TIMERCISEL1)

Address offset: 0x038

Reset value: 0x0000 0000

This register has to be accessed by word (32-bit).

31	30	29	28	27	26	25	24	23	22	21	20	19	18	17	16
TIMER1_CI3_SEL[3:0]				TIMER1_CI2_SEL[3:0]				TIMER1_CI1_SEL[3:0]				TIMER1_CI0_SEL[3:0]			
rw				rw				rw				rw			

15	14	13	12	11	10	9	8	7	6	5	4	3	2	1	0
TIMER2_CI3_SEL[3:0]				TIMER2_CI2_SEL[3:0]				TIMER2_CI1_SEL[3:0]				TIMER2_CI0_SEL[3:0]			
rw				rw				rw				rw			

Bits	Fields	Descriptions
31:28	TIMER1_CI3_SEL[3:0]	TIMER1_CI3 input selection These bits select the TIMER input source. 0000: TIMER1_CH3 input 0001: CMP0 output 0010: CMP1 output 0011: CMP0 output or CMP1 output Others: Reserved
27:24	TIMER1_CI2_SEL[3:0]	TIMER1_CI2 input selection These bits select the TIMER input source. 0000: TIMER1_CH2 input Others: Reserved
23:20	TIMER1_CI1_SEL[3:	TIMER1_CI1 input selection

	0]	These bits select the TIMER input source. 0000: TIMER1_CH1 input Others: Reserved
19:16	TIMER1_CI0_SEL[3:0]	TIMER1_CI0 input selection These bits select the TIMER input source. 0000: TIMER1_CH0 input Others: Reserved
15:12	TIMER2_CI3_SEL[3:0]	TIMER2_CI3 input selection These bits select the TIMER input source. 0000: TIMER2_CH3 input Others: Reserved
11:8	TIMER2_CI2_SEL[3:0]	TIMER2_CI2 input selection These bits select the TIMER input source. 0000: TIMER2_CH2 input Others: Reserved
7:4	TIMER2_CI1_SEL[3:0]	TIMER2_CI1 input selection These bits select the TIMER input source. 0000: TIMER2_CH1 input Others: Reserved
3:0	TIMER2_CI0_SEL[3:0]	TIMER2_CI0 input selection These bits select the TIMER input source. 0000: TIMER2_CH0 input 0001: CMP0 output 0010: CMP1 output 0011: CMP0 output or CMP1 output Others: Reserved

1.8.11. Timer input selection register 2 (SYSCFG_TIMERCISEL2)

Address offset: 0x03C

Reset value: 0x0000 0000

This register has to be accessed by word (32-bit).

31	30	29	28	27	26	25	24	23	22	21	20	19	18	17	16
TIMER3_CI3_SEL[3:0]				TIMER3_CI2_SEL[3:0]				TIMER3_CI1_SEL[3:0]				TIMER3_CI0_SEL[3:0]			
rw				rw				rw				rw			

15	14	13	12	11	10	9	8	7	6	5	4	3	2	1	0
TIMER4_CI3_SEL[3:0]				TIMER4_CI2_SEL[3:0]				TIMER4_CI1_SEL[3:0]				TIMER4_CI0_SEL[3:0]			
rw				rw				rw				rw			

Bits	Fields	Descriptions

31:28	TIMER3_CI3_SEL[3:0]	TIMER3_CI3 input selection These bits select the TIMER input source. 0000: TIMER3_CH3 input Others: Reserved
27:24	TIMER3_CI2_SEL[3:0]	TIMER3_CI2 input selection These bits select the TIMER input source. 0000: TIMER3_CH2 input Others: Reserved
23:20	TIMER3_CI1_SEL[3:0]	TIMER3_CI1 input selection These bits select the TIMER input source. 0000: TIMER3_CH1 input Others: Reserved
19:16	TIMER3_CI0_SEL[3:0]	TIMER3_CI0 input selection These bits select the TIMER input source. 0000: TIMER3_CH0 input Others: Reserved
15:12	TIMER4_CI3_SEL[3:0]	TIMER4_CI3 input selection These bits select the TIMER input source. 0000: TIMER4_CH3 input Others: Reserved
11:8	TIMER4_CI2_SEL[3:0]	TIMER4_CI2 input selection These bits select the TIMER input source. 0000: TIMER4_CH2 input Others: Reserved
7:4	TIMER4_CI1_SEL[3:0]	TIMER4_CI1 input selection These bits select the TIMER input source. 0000: TIMER4_CH1 input Others: Reserved
3:0	TIMER4_CI0_SEL[3:0]	TIMER4_CI0 input selection These bits select the TIMER input source. 0000: TIMER4_CH0 input Others: Reserved

1.8.12. Timer input selection register 3 (SYSCFG_TIMERCISEL3)

Address offset: 0x040

Reset value: 0x0000 0000

This register has to be accessed by word (32-bit).

31	30	29	28	27	26	25	24	23	22	21	20	19	18	17	16

TIMER22_CI3_SEL[3:0]	TIMER22_CI2_SEL[3:0]	TIMER22_CI1_SEL[3:0]	TIMER22_CI0_SEL[3:0]
rw	rw	rw	rw

15	14	13	12	11	10	9	8	7	6	5	4	3	2	1	0
TIMER23_CI3_SEL[3:0]				TIMER23_CI2_SEL[3:0]				TIMER23_CI1_SEL[3:0]				TIMER23_CI0_SEL[3:0]			
rw				rw				rw				rw			

Bits	Fields	Descriptions
31:28	TIMER22_CI3_SEL[3:0]	TIMER22_CI3 input selection These bits select the TIMER input source. 0000: TIMER22_CH3 input 0001: CMP0 output 0010: CMP1 output 0011: CMP0 output or CMP1 output Others: Reserved
27:24	TIMER22_CI2_SEL[3:0]	TIMER22_CI2 input selection These bits select the TIMER input source. 0000: TIMER22_CH2 input Others: Reserved
23:20	TIMER22_CI1_SEL[3:0]	TIMER22_CI1 input selection These bits select the TIMER input source. 0000: TIMER22_CH1 input Others: Reserved
19:16	TIMER22_CI0_SEL[3:0]	TIMER22_CI0 input selection These bits select the TIMER input source. 0000: TIMER22_CH0 input Others: Reserved
15:12	TIMER23_CI3_SEL[3:0]	TIMER23_CI3 input selection These bits select the TIMER input source. 0000: TIMER23_CH3 input Others: Reserved
11:8	TIMER23_CI2_SEL[3:0]	TIMER23_CI2 input selection These bits select the TIMER input source. 0000: TIMER23_CH2 input Others: Reserved
7:4	TIMER23_CI1_SEL[3:0]	TIMER23_CI1 input selection These bits select the TIMER input source. 0000: TIMER23_CH1 input Others: Reserved
3:0	TIMER23_CI0_SEL[3:0]	TIMER23_CI0 input selection These bits select the TIMER input source.

0000: TIMER23_CH0 input

Others: Reserved

1.8.13. Timer input selection register 4 (SYSCFG_TIMERCISEL4)

Address offset: 0x044

Reset value: 0x0000 0000

This register has to be accessed by word (32-bit).

31	30	29	28	27	26	25	24	23	22	21	20	19	18	17	16
TIMER30_CI3_SEL[3:0]				TIMER30_CI2_SEL[3:0]				TIMER30_CI1_SEL[3:0]				TIMER30_CI0_SEL[3:0]			
rw				rw				rw				rw			

15	14	13	12	11	10	9	8	7	6	5	4	3	2	1	0
TIMER31_CI3_SEL[3:0]				TIMER31_CI2_SEL[3:0]				TIMER31_CI1_SEL[3:0]				TIMER31_CI0_SEL[3:0]			
rw				rw				rw				rw			

Bits	Fields	Descriptions
31:28	TIMER30_CI3_SEL[3:0]	TIMER30_CI3 input selection These bits select the TIMER input source. 0000: TIMER30_CH3 input Others: Reserved
27:24	TIMER30_CI2_SEL[3:0]	TIMER30_CI2 input selection These bits select the TIMER input source. 0000: TIMER30_CH2 input Others: Reserved
23:20	TIMER30_CI1_SEL[3:0]	TIMER30_CI1 input selection These bits select the TIMER input source. 0000: TIMER30_CH1 input Others: Reserved
19:16	TIMER30_CI0_SEL[3:0]	TIMER30_CI0 input selection These bits select the TIMER input source. 0000: TIMER30_CH0 input 0001: CMP0 output 0010: CMP1 output 0011: CMP0 output or CMP1 output Others: Reserved
15:12	TIMER31_CI3_SEL[3:0]	TIMER31_CI3 input selection These bits select the TIMER input source. 0000: TIMER31_CH3 input Others: Reserved
11:8	TIMER31_CI2_SEL[3:0]	TIMER31_CI2 input selection These bits select the TIMER input source.

		0000: TIMER31_CH2 input Others: Reserved
7:4	TIMER31_CI1_SEL[3:0]	TIMER31_CI1 input selection These bits select the TIMER input source. 0000: TIMER31_CH1 input Others: Reserved
3:0	TIMER31_CI0_SEL[3:0]	TIMER31_CI0 input selection These bits select the TIMER input source. 0000: TIMER31_CH0 input 0001: CMP0 output 0010: CMP1 output 0011: CMP0 output or CMP1 output Others: Reserved

1.8.14. Timer input selection register 5 (SYSCFG_TIMERCISEL5)

Address offset: 0x048

Reset value: 0x0000 0000

This register has to be accessed by word (32-bit).

31	30	29	28	27	26	25	24	23	22	21	20	19	18	17	16
TIMER42_CI1_SEL[3:0]				TIMER42_CI0_SEL[3:0]				TIMER41_CI1_SEL[3:0]				TIMER41_CI0_SEL[3:0]			
rw				rw				rw				rw			

15	14	13	12	11	10	9	8	7	6	5	4	3	2	1	0
TIMER40_CI1_SEL[3:0]				TIMER40_CI0_SEL[3:0]				TIMER14_CI1_SEL[3:0]				TIMER14_CI0_SEL[3:0]			
rw				rw				rw				rw			

Bits	Fields	Descriptions
31:28	TIMER42_CI1_SEL[3:0]	Selects TIMER42_CI1 input These bits select the TIMER input source. 0000: TIMER42_CH1 input 0001: TIMER4_CH1 input 0010: TIMER22_CH1 input 0011: TIMER23_CH1 input Others: Reserved
27:24	TIMER42_CI0_SEL[3:0]	Selects TIMER42_CI0 input These bits select the TIMER input source. 0000: TIMER42_CH0 input 0001: TIMER4_CH0 input 0010: TIMER22_CH0 input 0011: TIMER23_CH0 input 0100: LXTAL

		0101: LPIRC4M 0110: CKOUT1 Others: Reserved
23:20	TIMER41_CI1_SEL[3:0]	Selects TIMER41_CI1 input These bits select the TIMER input source. 0000: TIMER41_CH1 input 0001: TIMER3_CH1 input 0010: TIMER4_CH1 input 0011: TIMER22_CH1 input Others: Reserved
19:16	TIMER41_CI0_SEL[3:0]	Selects TIMER41_CI0 input These bits select the TIMER input source. 0000: TIMER41_CH0 input 0001: TIMER3_CH0 input 0010: TIMER4_CH0 input 0011: TIMER22_CH0 input 0100: LXTAL 0101: LPIRC4M 0110: CKOUT1 Others: Reserved
15:12	TIMER40_CI1_SEL[3:0]	Selects TIMER40_CI1 input These bits select the TIMER input source. 0000: TIMER40_CH1 input 0001: TIMER2_CH1 input 0010: TIMER3_CH1 input 0011: TIMER4_CH1 input Others: Reserved
11:8	TIMER40_CI0_SEL[3:0]	Selects TIMER40_CI0 input These bits select the TIMER input source. 0000: TIMER40_CH0 input 0001: TIMER2_CH0 input 0010: TIMER3_CH0 input 0011: TIMER4_CH0 input 0100: LXTAL 0101: LPIRC4M 0110: CKOUT1 Others: Reserved
7:4	TIMER14_CI1_SEL[3:0]	Selects TIMER14_CI1 input These bits select the TIMER input source. 0000: TIMER14_CH1 input 0001: TIMER1_CH1 input

		0010: TIMER2_CH1 input 0011: TIMER3_CH1 input Others: Reserved
3:0	TIMER14_CI0_SEL[3:0]	Selects TIMER14_CI0 input These bits select the TIMER input source. 0000: TIMER14_CH0 input 0001: TIMER1_CH0 input 0010: TIMER2_CH0 input 0011: TIMER3_CH0 input 0100: LXTAL 0101: LPIRC4M 0110: CKOUT1 Others: Reserved

1.8.15. Timer input selection register 6 (SYSCFG_TIMERCISEL6)

Address offset: 0x04C

Reset value: 0x0000 0000

This register has to be accessed by word (32-bit).

31	30	29	28	27	26	25	24	23	22	21	20	19	18	17	16
Reserved								TIMER44_CI1_SEL[3:0]				TIMER44_CI0_SEL[3:0]			
								rw				rw			

15	14	13	12	11	10	9	8	7	6	5	4	3	2	1	0
TIMER43_CI1_SEL[3:0]				TIMER43_CI0_SEL[3:0]				TIMER16_CI0_SEL[3:0]				TIMER15_CI0_SEL[3:0]			
rw				rw				rw				rw			

Bits	Fields	Descriptions
31:24	Reserved	Must be kept at reset value.
23:20	TIMER44_CI1_SEL[3:0]	Selects TIMER44_CI1 input These bits select the TIMER input source. 0000: TIMER44_CH1 input 0001: TIMER23_CH1 input 0010: TIMER30_CH1 input 0011: TIMER31_CH1 input Others: Reserved
19:16	TIMER44_CI0_SEL[3:0]	Selects TIMER44_CI0 input These bits select the TIMER input source. 0000: TIMER44_CH0 input 0001: TIMER23_CH0 input 0010: TIMER30_CH0 input 0011: TIMER31_CH0 input

		0100: LXTAL 0101: LPIRC4M 0110: CKOUT1 Others: Reserved
15:12	TIMER43_CI1_SEL[3:0]	Selects TIMER43_CI1 input These bits select the TIMER input source. 0000: TIMER43_CH1 input 0001: TIMER22_CH1 input 0010: TIMER23_CH1 input 0011: TIMER30_CH1 input Others: Reserved
11:8	TIMER43_CI0_SEL[3:0]	Selects TIMER43_CI0 input These bits select the TIMER input source. 0000: TIMER43_CH0 input 0001: TIMER22_CH0 input 0010: TIMER23_CH0 input 0011: TIMER30_CH0 input 0100: LXTAL 0101: LPIRC4M 0110: CKOUT1 Others: Reserved
7:4	TIMER16_CI0_SEL[3:0]	Selects TIMER16_CI0 input These bits select the TIMER input source. 0000: TIMER16_CH0 input 0010: CK_HXTAL / RTCDIV 0011: CKOUT0 Others: Reserved
3:0	TIMER15_CI0_SEL[3:0]	Selects TIMER15_CI0 input These bits select the TIMER input source. 0000: TIMER15_CH0 input 0001: IRC32K 0010: LXTAL 0011: WKUP_IT Others: Reserved

1.8.16. CPU ICACHE error status register(SYSCFG_CPUICAC)

Address offset: 0x054

Reset value: 0x0000 0000

This register has to be accessed by word (32-bit).

31	30	29	28	27	26	25	24	23	22	21	20	19	18	17	16

CPU_ICDET[3:0]	CPU_ICERR[21:10]
r	r

15	14	13	12	11	10	9	8	7	6	5	4	3	2	1	0
CPU_ICERR[9:0]										Reserved					
r															

Bits	Fields	Descriptions
31:28	CPU_ICDET[3:0]	The ICACHE error detection information These bits are provided by the CPU to indicate the ICACHE error detection information.
27:6	CPU_ICERR[21:0]	The ICACHE error bank information These bits are provided by the CPU to indicate the ICACHE error bank information.
5:0	Reserved	Must be kept at reset value.

1.8.17. CPU DCACHE error status register (SYSCFG_CPUDCAC)

Address offset: 0x058

Reset value: 0x0000 0000

This register has to be accessed by word (32-bit).

31	30	29	28	27	26	25	24	23	22	21	20	19	18	17	16
CPU_DCDET[3:0]				CPU_DCERR[21:10]											
r				r											

15	14	13	12	11	10	9	8	7	6	5	4	3	2	1	0
CPU_DCERR[9:0]										Reserved					
r															

Bits	Fields	Descriptions
31:28	CPU_DCDET[3:0]	The DCACHE error detection information These bits are provided by the CPU to indicate the DCACHE error detection information.
27:6	CPU_DCERR[21:0]	The DCACHE error bank information These bits are provided by the CPU to indicate the DCACHE error bank information.
5:0	Reserved	Must be kept at reset value.

1.8.18. FPU interrupt enable register (SYSCFG_FPUINTEN)

Address offset: 0x05C

Reset value: 0x0000 001F

This register has to be accessed by word (32-bit).

31	30	29	28	27	26	25	24	23	22	21	20	19	18	17	16

Reserved

15	14	13	12	11	10	9	8	7	6	5	4	3	2	1	0
Reserved										IXIE	IDIE	OVFIE	UFIE	DZIE	IOPIE
										rw	rw	rw	rw	rw	rw

Bits	Fields	Descriptions
31:6	Reserved	Must be kept at reset value.
5	IXIE	Inexact interrupt enable bit 0: Inexact interrupt disable 1: Inexact interrupt enable
4	IDIE	Input denormal interrupt enable bit 0: Input denormal interrupt disable 1: Input denormal interrupt enable
3	OVFIE	Overflow interrupt enable bit 0: Overflow interrupt disable 1: Overflow interrupt enable
2	UFIE	Underflow interrupt enable bit 0: Underflow interrupt disable 1: Underflow interrupt enable
1	DZIE	Divide by 0 interrupt enable bit 0: Divide by 0 interrupt disable 1: Divide by 0 interrupt enable
0	IOPIE	Invalid operation interrupt enable bit 0: Invalid operation interrupt disable 1: Invalid operation interrupt enable

1.8.19. SRAM configuration register 0 (SYSCFG_SRAMCFG0)

Address offset: 0x64

Reset value: 0x0000 0000

This register has to be accessed by word (32-bit).

31	30	29	28	27	26	25	24	23	22	21	20	19	18	17	16
Reserved															

15	14	13	12	11	10	9	8	7	6	5	4	3	2	1	0
Reserved														SECURE_SRAM_SIZE[1:0]	
														rw	

Bits	Fields	Descriptions
31:2	Reserved	Must be kept at reset value.
1:0	SECURE_SRAM_SIZE[1:0]	Size of secure SRAM These bits are set and cleared by software. 00: 0 Kbytes 01: 32 Kbytes 10: 64 Kbytes 11: 128 Kbytes

1.8.20. SRAM configuration register 1 (SYSCFG_SRAMCFG1)

Address offset: 0x68

Reset value: 0x0000 0000

This register has to be accessed by word (32-bit).

31	30	29	28	27	26	25	24	23	22	21	20	19	18	17	16
Reserved															

15	14	13	12	11	10	9	8	7	6	5	4	3	2	1	0
Reserved															TCM_WAITSTATE
															rw

Bits	Fields	Descriptions
31:1	Reserved	Must be kept at reset value.
0	TCM_WAITSTATE	TCM wait state configuration This bit is set and cleared by software. It can be reset by system reset only. This bit is used to insert wait-state in ITCM / D0TCM / D1TCM. **Note:** When the system clock frequency is higher than f_{tww}, this bit must be set. 0: No wait-state 1: Insert wait-state

1.8.21. TIMERx configuration register 0 (SYSCFG_TIMERxCFG0, x=0, 7)

Address offset: 0x100 for TIMER0

Address offset: 0x13C for TIMER7

Reset value: 0x0000 0000

TSCFG0[4:0], TSCFG1[4:0]..TSCFG9[4:0] are mutually exclusive and cannot be configured at the same time.

This register has to be accessed by word (32-bit).

31	30	29	28	27	26	25	24	23	22	21	20	19	18	17	16
Reserved	TSCFG5[4:0]					TSCFG4[4:0]					TSCFG3[4:0]				

			rw					rw					rw		
15	14	13	12	11	10	9	8	7	6	5	4	3	2	1	0
Reserved	TSCFG2[4:0]					TSCFG1[4:0]					TSCFG0[4:0]				
			rw					rw					rw		

Bits	Fields	Descriptions
31	Reserved	Must be kept at reset value.
30:26	TSCFG5[4:0]	Event mode configuration A rising edge of the trigger input enables the counter. 00000: Event mode disable 00001: Internal trigger input 0 (ITI0) 00010: Internal trigger input 1 (ITI1) 00011: Internal trigger input 2 (ITI2) 00100: Internal trigger input 3 (ITI3) 00101: CI0 edge flag (CI0F_ED) 00110: The filtered output of channel 0 input (CI0FE0) 00111: The filtered output of channel 1 input (CI1FE1) 01000: The filtered output of external trigger input (ETIFP) 01001: The filtered output of channel 2 input (CI2FE2) 01010: The filtered output of channel 3 input (CI3FE3) 01011: The filtered output of multi mode channel 0 input (MCI0FEM0) 01100: The filtered output of multi mode channel 1 input (MCI1FEM1) 01101: The filtered output of multi mode channel 2 input (MCI2FEM2) 01110: The filtered output of multi mode channel 3 input (MCI3FEM3) 01111: Reserved 10000: Reserved 10001: Internal trigger input 12 (ITI12) 10010: Internal trigger input 13 (ITI13) 10011: Internal trigger input 14 (ITI14) Others: Reserved
25:21	TSCFG4[4:0]	Pause mode configuration The trigger input enables the counter clock when it is high and disables the counter when it is low when these bits are not 0. 00000: Pause mode disable 00001: Internal trigger input 0 (ITI0) 00010: Internal trigger input 1 (ITI1) 00011: Internal trigger input 2 (ITI2) 00100: Internal trigger input 3 (ITI3) 00101: Reserved 00110: The filtered output of channel 0 input (CI0FE0) 00111: The filtered output of channel 1 input (CI1FE1) 01000: The filtered output of external trigger input (ETIFP)

		01001: The filtered output of channel 2 input (CI2FE2) 01010: The filtered output of channel 3 input (CI3FE3) 01011: The filtered output of multi mode channel 0 input (MCI0FEM0) 01100: The filtered output of multi mode channel 1 input (MCI1FEM1) 01101: The filtered output of multi mode channel 2 input (MCI2FEM2) 01110: The filtered output of multi mode channel 3 input (MCI3FEM3) 01111: Reserved 10000: Reserved 10001: Internal trigger input 12 (ITI12) 10010: Internal trigger input 13 (ITI13) 10011: Internal trigger input 14 (ITI14) Others: Reserved
20:16	TSCFG3[4:0]	Restart mode configuration The counter is reinitialized and the shadow registers are updated on the rising edge of the selected trigger input when these bits are not 0. 00000: Restart mode disable 00001: Internal trigger input 0 (ITI0) 00010: Internal trigger input 1 (ITI1) 00011: Internal trigger input 2 (ITI2) 00100: Internal trigger input 3 (ITI3) 00101: CI0 edge flag (CI0F_ED) 00110: The filtered output of channel 0 input (CI0FE0) 00111: The filtered output of channel 1 input (CI1FE1) 01000: The filtered output of external trigger input (ETIFP) 01001: The filtered output of channel 2 input (CI2FE2) 01010: The filtered output of channel 3 input (CI3FE3) 01011: The filtered output of multi mode channel 0 input (MCI0FEM0) 01100: The filtered output of multi mode channel 1 input (MCI1FEM1) 01101: The filtered output of multi mode channel 2 input (MCI2FEM2) 01110: The filtered output of multi mode channel 3 input (MCI3FEM3) 01111: Reserved 10000: Reserved 10001: Internal trigger input 12 (ITI12) 10010: Internal trigger input 13 (ITI13) 10011: Internal trigger input 14 (ITI14) Others: Reserved
15	Reserved	Must be kept at reset value.
14:10	TSCFG2[4:0]	Quadrature decoder mode 2 configuration 00000: Quadrature decoder mode 2 disable Others: The counter counts on both CI0FE0 and CI1FE1 edges, while the direction depends on each other
9:5	TSCFG1[4:0]	Quadrature decoder mode 1 configuration

		00000: Quadrature decoder mode 1 disable Others: The counter counts on CI1FE1 edge, while the direction depends on CI0FE0 level
4:0	TSCFG0[4:0]	Quadrature decoder mode 0 configuration 00000: Quadrature decoder mode 0 disable Others: The counter counts on CI0FE0 edge, while the direction depends on CI1FE1 level.

1.8.22. TIMERx configuration register 1 (SYSCFG_TIMERxCFG1, x=0, 7)

Address offset: 0x104 for TIMER0
Address offset: 0x140 for TIMER7
Reset value: 0x0000 0000

TSCFG0[4:0], TSCFG1[4:0]..TSCFG9[4:0] are mutually exclusive and cannot be configured at the same time.

This register has to be accessed by word (32-bit).

31	30	29	28	27	26	25	24	23	22	21	20	19	18	17	16
Reserved											TSCFG9[4:0]				
													rw		

15	14	13	12	11	10	9	8	7	6	5	4	3	2	1	0
Reserved	TSCFG8[4:0]					TSCFG7[4:0]					TSCFG6[4:0]				
			rw					rw					rw		

Bits	Fields	Descriptions
31:21	Reserved	Must be kept at reset value.
20:16	TSCFG9[4:0]	Non-quadrature decoder mode 1 configuration 00000: Non-quadrature decoder mode 1 disable Others: The CI0 signal is used as the count pulse(with the CH0P is used to select the counter edge) and the CI1 signal is used as the count direction selection.
15	Reserved	Must be kept at reset value.
14:10	TSCFG8[4:0]	Non-quadrature decoder mode 0 configuration 00000: Non-quadrature decoder mode 0 disable Others: The CI0 signal is used as the count pulse and CI1 is used as the count selection signal. When CH1P=0, the counter will count up on the rising edge of the CI0 input signal merely in the case that the CI1 signal is high; When CH1P=1, the counter will count up on the rising edge of the CI0 input signal merely in the case that the CI1 signal is low.
9:5	TSCFG7[4:0]	Restart + event mode configuration The counter is reinitialized and started, the shadow registers are updated on the

		rising edge of the selected trigger input when these bits are not 0. 00000: Restart + event mode disable 00001: Internal trigger input 0 (ITI0) 00010: Internal trigger input 1 (ITI1) 00011: Internal trigger input 2 (ITI2) 00100: Internal trigger input 3 (ITI3) 00101: CI0 edge flag (CI0F_ED) 00110: The filtered output of channel 0 input (CI0FE0) 00111: The filtered output of channel 1 input (CI1FE1) 01000: The filtered output of external trigger input (ETIFP) 01001: The filtered output of channel 2 input (CI2FE2) 01010: The filtered output of channel 3 input (CI3FE3) 01011: The filtered output of multi mode channel 0 input (MCI0FEM0) 01100: The filtered output of multi mode channel 1 input (MCI1FEM1) 01101: The filtered output of multi mode channel 2 input (MCI2FEM2) 01110: The filtered output of multi mode channel 3 input (MCI3FEM3) 01111: Reserved 10000: Reserved 10001: Internal trigger input 12 (ITI12) 10010: Internal trigger input 13 (ITI13) 10011: Internal trigger input 14 (ITI14) Others: Reserved
4:0	TSCFG6[4:0]	External clock mode 0 configuration The counter counts on the rising edges of the selected trigger when these bits are not 0. 00000: External clock mode 0 disable 00001: Internal trigger input 0 (ITI0) 00010: Internal trigger input 1 (ITI1) 00011: Internal trigger input 2 (ITI2) 00100: Internal trigger input 3 (ITI3) 00101: CI0 edge flag (CI0F_ED) 00110: The filtered output of channel 0 input (CI0FE0) 00111: The filtered output of channel 1 input (CI1FE1) 01000: The filtered output of external trigger input (ETIFP) 01001: The filtered output of channel 2 input (CI2FE2) 01010: The filtered output of channel 3 input (CI3FE3) 01011: The filtered output of multi mode channel 0 input (MCI0FEM0) 01100: The filtered output of multi mode channel 1 input (MCI1FEM1) 01101: The filtered output of multi mode channel 2 input (MCI2FEM2) 01110: The filtered output of multi mode channel 3 input (MCI3FEM3) 01111: Reserved 10000: Reserved 10001: Internal trigger input 12 (ITI12)

10010: Internal trigger input 13 (ITI13)

10011: Internal trigger input 14 (ITI14)

Others: Reserved

1.8.23. TIMERx configuration register 2 (SYSCFG_TIMERxCFG2, x=0, 7)

Address offset: 0x108 for TIMER0

Address offset: 0x144 for TIMER7

Reset value: 0x0000 0000

TSCFG0[4:0], TSCFG1[4:0]..TSCFG9[4:0] are mutually exclusive and cannot be configured at the same time.

This register has to be accessed by word (32-bit).

31	30	29	28	27	26	25	24	23	22	21	20	19	18	17	16
Reserved											TSCFG15[4:0]				
													rw		

15	14	13	12	11	10	9	8	7	6	5	4	3	2	1	0
Reserved															

Bits	Fields	Descriptions
31:21	Reserved	Must be kept at reset value.
20:16	TSCFG15[4:0]	Internal trigger input source configuration 00000: Reserved 00001: Internal trigger input 0 (ITI0) 00010: Internal trigger input 1 (ITI1) 00011: Internal trigger input 2 (ITI2) 00100: Internal trigger input 3 (ITI3) 00101: CI0 edge flag (CI0F_ED) 00110: Reserved 00111: Reserved 01000: Reserved 01001: Reserved 01010: Reserved 01011: Reserved 01100: Reserved 01101: Reserved 01110: Reserved 01111: Reserved 10000: Reserved 10001: Internal trigger input 12 (ITI12) 10010: Internal trigger input 13 (ITI13)

		10011: Internal trigger input 14 (ITI14) Others: Reserved **Note:** When TSCFG15[4:0] is used, TSCFGy[4:0](y=0..9) should be zero, otherwise, the ITS trigger cooperate with TSCFGy[4:0], and input source depend on TSCFGy[4:0].
15:0	Reserved	Must be kept at reset value.

1.8.24. TIMERx configuration register 0 (SYSCFG_TIMERxCFG0, x=1, 2, 3, 4, 22, 23, 30, 31)

Address offset: 0x10C for TIMER1
Address offset: 0x118 for TIMER2
Address offset: 0x124 for TIMER3
Address offset: 0x130 for TIMER4
Address offset: 0x154 for TIMER22
Address offset: 0x160 for TIMER23
Address offset: 0x16C for TIMER30
Address offset: 0x178 for TIMER31
Reset value: 0x0000 0000

TSCFG0[4:0], TSCFG1[4:0]..TSCFG9[4:0] are mutually exclusive and cannot be configured at the same time.

This register has to be accessed by word (32-bit).

31	30	29	28	27	26	25	24	23	22	21	20	19	18	17	16
Reserved	TSCFG5[4:0]					TSCFG4[4:0]					TSCFG3[4:0]				
	rw					rw					rw				

15	14	13	12	11	10	9	8	7	6	5	4	3	2	1	0
Reserved	TSCFG2[4:0]					TSCFG1[4:0]					TSCFG0[4:0]				
	rw					rw					rw				

Bits	Fields	Descriptions
31	Reserved	Must be kept at reset value.
30:26	TSCFG5[4:0]	Event mode configuration A rising edge of the trigger input enables the counter. 00000: Event mode disable 00001: Internal trigger input 0 (ITI0) 00010: Internal trigger input 1 (ITI1) 00011: Internal trigger input 2 (ITI2) 00100: Internal trigger input 3 (ITI3) 00101: CI0 edge flag (CI0F_ED) 00110: The filtered output of channel 0 input (CI0FE0)

		00111: The filtered output of channel 1 input (CI1FE1) 01000: The filtered output of external trigger input (ETIFP) 01001: Internal trigger input 4 (ITI4) 01010: Internal trigger input 5 (ITI5) 01011: Reserved 01100: Internal trigger input 7 (ITI7) 01101: Reserved 01110: Internal trigger input 9 (ITI9) 01111: Internal trigger input 10 (ITI10) 10000: Internal trigger input 11 (ITI11) 10001: Internal trigger input 12 (ITI12) 10010: Internal trigger input 13 (ITI13) 10011: Internal trigger input 14 (ITI14) Others: Reserved
25:21	TSCFG4[4:0]	Pause mode configuration The trigger input enables the counter clock when it is high and disables the counter when it is low when these bits are not 0. 00000: Pause mode disable 00001: Internal trigger input 0 (ITI0) 00010: Internal trigger input 1 (ITI1) 00011: Internal trigger input 2 (ITI2) 00100: Internal trigger input 3 (ITI3) 00101: Reserved 00110: The filtered output of channel 0 input (CI0FE0) 00111: The filtered output of channel 1 input (CI1FE1) 01000: The filtered output of external trigger input (ETIFP) 01001: Internal trigger input 4 (ITI4) 01010: Internal trigger input 5 (ITI5) 01011: Reserved 01100: Internal trigger input 7 (ITI7) 01101: Reserved 01110: Internal trigger input 9 (ITI9) 01111: Internal trigger input 10 (ITI10) 10000: Internal trigger input 11 (ITI11) 10001: Internal trigger input 12 (ITI12) 10010: Internal trigger input 13 (ITI13) 10011: Internal trigger input 14 (ITI14) Others: Reserved
20:16	TSCFG3[4:0]	Restart mode configuration The counter is reinitialized and the shadow registers are updated on the rising edge of the selected trigger input when these bits are not 0. 00000: Restart mode disable 00001: Internal trigger input 0 (ITI0)

		00010: Internal trigger input 1 (ITI1) 00011: Internal trigger input 2 (ITI2) 00100: Internal trigger input 3 (ITI3) 00101: CI0 edge flag (CI0F_ED) 00110: The filtered output of channel 0 input (CI0FE0) 00111: The filtered output of channel 1 input (CI1FE1) 01000: The filtered output of external trigger input (ETIFP) 01001: Internal trigger input 4 (ITI4) 01010: Internal trigger input 5 (ITI5) 01011: Reserved 01100: Internal trigger input 7 (ITI7) 01101: Reserved 01110: Internal trigger input 9 (ITI9) 01111: Internal trigger input 10 (ITI10) 10000: Internal trigger input 11 (ITI11) 10001: Internal trigger input 12 (ITI12) 10010: Internal trigger input 13 (ITI13) 10011: Internal trigger input 14 (ITI14) Others: Reserved
15	Reserved	Must be kept at reset value.
14:10	TSCFG2[4:0]	Quadrature decoder mode 2 configuration 00000: Quadrature decoder mode 2 disable Others: The counter counts on both CI0FE0 and CI1FE1 edges, while the direction depends on each other
9:5	TSCFG1[4:0]	Quadrature decoder mode 1 configuration 00000: Quadrature decoder mode 1 disable Others: The counter counts on CI1FE1 edge, while the direction depends on CI0FE0 level
4:0	TSCFG0[4:0]	Quadrature decoder mode 0 configuration 00000: Quadrature decoder mode 0 disable Others: The counter counts on CI0FE0 edge, while the direction depends on CI1FE1 level.

1.8.25. TIMERx configuration register 1 (SYSCFG_TIMERxCFG1, x=1, 2, 3, 4, 22, 23, 30, 31)

Address offset: 0x110 for TIMER1
Address offset: 0x11C for TIMER2
Address offset: 0x128 for TIMER3
Address offset: 0x134 for TIMER4
Address offset: 0x158 for TIMER22

Address offset: 0x164 for TIMER23
Address offset: 0x170 for TIMER30
Address offset: 0x17C for TIMER31
Reset value: 0x0000 0000

TSCFG0[4:0], TSCFG1[4:0]..TSCFG9[4:0] are mutually exclusive and cannot be configured at the same time.

This register has to be accessed by word (32-bit).

31	30	29	28	27	26	25	24	23	22	21	20	19	18	17	16
Reserved											TSCFG9[4:0]				
													rw		

15	14	13	12	11	10	9	8	7	6	5	4	3	2	1	0
Reserved	TSCFG8[4:0]					TSCFG7[4:0]					TSCFG6[4:0]				
	rw					rw					rw				

Bits	Fields	Descriptions
31:21	Reserved	Must be kept at reset value.
20:16	TSCFG9[4:0]	Non-quadrature decoder mode 1 configuration 00000: Non-quadrature decoder mode 1 disable Others: The CI0 signal is used as the count pulse(with the CH0P is used to select the counter edge) and the CI1 signal is used as the count direction selection.
15	Reserved	Must be kept at reset value.
14:10	TSCFG8[4:0]	Non-quadrature decoder mode 0 configuration 00000: Non-quadrature decoder mode 0 disable Others: The CI0 signal is used as the count pulse and CI1 is used as the count selection signal. When CH1P=0, the counter will count up on the rising edge of the CI0 input signal merely in the case that the CI1 signal is high; When CH1P=1, the counter will count up on the rising edge of the CI0 input signal merely in the case that the CI1 signal is low.
9:5	TSCFG7[4:0]	Restart + event mode configuration The counter is reinitialized and started, the shadow registers are updated on the rising edge of the selected trigger input when these bits are not 0. 00000: Restart + event mode disable 00001: Internal trigger input 0 (ITI0) 00010: Internal trigger input 1 (ITI1) 00011: Internal trigger input 2 (ITI2) 00100: Internal trigger input 3 (ITI3) 00101: CI0 edge flag (CI0F_ED) 00110: The filtered output of channel 0 input (CI0FE0) 00111: The filtered output of channel 1 input (CI1FE1) 01000: The filtered output of external trigger input (ETIFP)

		01001: Internal trigger input 4 (ITI4) 01010: Internal trigger input 5 (ITI5) 01011: Reserved 01100: Internal trigger input 7 (ITI7) 01101: Reserved 01110: Internal trigger input 9 (ITI9) 01111: Internal trigger input 10 (ITI10) 10000: Internal trigger input 11 (ITI11) 10001: Internal trigger input 12 (ITI12) 10010: Internal trigger input 13 (ITI13) 10011: Internal trigger input 14 (ITI14) Others: Reserved
4:0	TSCFG6[4:0]	External clock mode 0 configuration The counter counts on the rising edges of the selected trigger when these bits are not 0. 00000: External clock mode 0 disable 00001: Internal trigger input 0 (ITI0) 00010: Internal trigger input 1 (ITI1) 00011: Internal trigger input 2 (ITI2) 00100: Internal trigger input 3 (ITI3) 00101: CI0 edge flag (CI0F_ED) 00110: The filtered output of channel 0 input (CI0FE0) 00111: The filtered output of channel 1 input (CI1FE1) 01000: The filtered output of external trigger input (ETIFP) 01001: Internal trigger input 4 (ITI4) 01010: Internal trigger input 5 (ITI5) 01011: Reserved 01100: Internal trigger input 7 (ITI7) 01101: Reserved 01110: Internal trigger input 9 (ITI9) 01111: Internal trigger input 10 (ITI10) 10000: Internal trigger input 11 (ITI11) 10001: Internal trigger input 12 (ITI12) 10010: Internal trigger input 13 (ITI13) 10011: Internal trigger input 14 (ITI14) Others: Reserved

1.8.26. TIMERx configuration register 2 (SYSCFG_TIMERxCFG2, x=1, 2, 3, 4, 22, 23, 30, 31)

Address offset: 0x114 for TIMER1

Address offset: 0x120 for TIMER2

Address offset: 0x12C for TIMER3
Address offset: 0x138 for TIMER4
Address offset: 0x15C for TIMER22
Address offset: 0x168 for TIMER23
Address offset: 0x174 for TIMER30
Address offset: 0x180 for TIMER31
Reset value: 0x0000 0000

TSCFG0[4:0], TSCFG1[4:0]..TSCFG9[4:0] are mutually exclusive and cannot be configured at the same time.

This register has to be accessed by word (32-bit).

31	30	29	28	27	26	25	24	23	22	21	20	19	18	17	16
Reserved											TSCFG15[4:0]				
													rw		

15	14	13	12	11	10	9	8	7	6	5	4	3	2	1	0
Reserved															

Bits	Fields	Descriptions
31:21	Reserved	Must be kept at reset value.
20:16	TSCFG15[4:0]	Internal trigger input source configuration 00000: Reserved 00001: Internal trigger input 0 (ITI0) 00010: Internal trigger input 1 (ITI1) 00011: Internal trigger input 2 (ITI2) 00100: Internal trigger input 3 (ITI3) 00101: CI0 edge flag (CI0F_ED) 00110: Reserved 00111: Reserved 01000: Reserved 01001: Internal trigger input 4 (ITI4) 01010: Internal trigger input 5 (ITI5) 01011: Reserved 01100: Internal trigger input 7 (ITI7) 01101: Reserved 01110: Internal trigger input 9 (ITI9) 01111: Internal trigger input 10 (ITI10) 10000: Internal trigger input 11 (ITI11) 10001: Internal trigger input 12 (ITI12) 10010: Internal trigger input 13 (ITI13) 10011: Internal trigger input 14 (ITI14) Others: Reserved

		Note: When TSCFG15[4:0] is used, TSCFGy[4:0](y=0..9) should be zero, otherwise, the ITS trigger cooperate with TSCFGy[4:0], and input source depend on TSCFGy[4:0].
15:0	Reserved	Must be kept at reset value.

1.8.27. TIMERx configuration register 0 (SYSCFG_TIMERxCFG0, x=14, 40, 41, 42, 43, 44)

Address offset: 0x148 for TIMER14
Address offset: 0x184 for TIMER40
Address offset: 0x190 for TIMER41
Address offset: 0x19C for TIMER42
Address offset: 0x1A8 for TIMER43
Address offset: 0x1B4 for TIMER44
Reset value: 0x0000 0000

TSCFG3[4:0], TSCFG4[4:0]..TSCFG7[4:0] are mutually exclusive and cannot be configured at the same time.

This register has to be accessed by word (32-bit).

31	30	29	28	27	26	25	24	23	22	21	20	19	18	17	16
Reserved	TSCFG5[4:0]					TSCFG4[4:0]					TSCFG3[4:0]				
	rw					rw					rw				

15	14	13	12	11	10	9	8	7	6	5	4	3	2	1	0
Reserved															

Bits	Fields	Descriptions
31	Reserved	Must be kept at reset value.
30:26	TSCFG5[4:0]	Event mode configuration A rising edge of the trigger input enables the counter. 00000: Event mode disable 00001: Internal trigger input 0 (ITI0) 00010: Internal trigger input 1 (ITI1) 00011: Internal trigger input 2 (ITI2) 00100: Internal trigger input 3 (ITI3) 00101: CI0 edge flag (CI0F_ED) 00110: The filtered output of channel 0 input (CI0FE0) 00111: The filtered output of channel 1 input (CI1FE1) 01000: Reserved 01001: Reserved 01010: Reserved

		01011: The filtered output of multi mode channel 0 input (MCI0FEM0) 10011: Internal trigger input 14 (ITI14) Others: Reserved
25:21	TSCFG4[4:0]	Pause mode configuration The trigger input enables the counter clock when it is high and disables the counter when it is low when these bits are not 0. 00000: Pause mode disable 00001: Internal trigger input 0 (ITI0) 00010: Internal trigger input 1 (ITI1) 00011: Internal trigger input 2 (ITI2) 00100: Internal trigger input 3 (ITI3) 00101: Reserved 00110: The filtered output of channel 0 input (CI0FE0) 00111: The filtered output of channel 1 input (CI1FE1) 01000: Reserved 01001: Reserved 01010: Reserved 01011: The filtered output of multi mode channel 0 input (MCI0FEM0) 10011: Internal trigger input 14 (ITI14) Others: Reserved
20:16	TSCFG3[4:0]	Restart mode configuration The counter is reinitialized and the shadow registers are updated on the rising edge of the selected trigger input when these bits are not 0. 00000: Restart mode disable 00001: Internal trigger input 0 (ITI0) 00010: Internal trigger input 1 (ITI1) 00011: Internal trigger input 2 (ITI2) 00100: Internal trigger input 3 (ITI3) 00101: CI0 edge flag (CI0F_ED) 00110: The filtered output of channel 0 input (CI0FE0) 00111: The filtered output of channel 1 input (CI1FE1) 01000: Reserved 01001: Reserved 01010: Reserved 01011: The filtered output of multi mode channel 0 input (MCI0FEM0) 10011: Internal trigger input 14 (ITI14) Others: Reserved
15:0	Reserved	Must be kept at reset value.

1.8.28. TIMERx configuration register 1 (SYSCFG_TIMERxCFG1, x=14, 40, 41, 42, 43, 44)

Address offset: 0x14C for TIMER14
Address offset: 0x188 for TIMER40
Address offset: 0x194 for TIMER41
Address offset: 0x1A0 for TIMER42
Address offset: 0x1AC for TIMER43
Address offset: 0x1B8 for TIMER44
Reset value: 0x0000 0000

TSCFG3[4:0], TSCFG4[4:0]..TSCFG7[4:0] are mutually exclusive and cannot be configured at the same time.

This register has to be accessed by word (32-bit).

31	30	29	28	27	26	25	24	23	22	21	20	19	18	17	16
Reserved															

15	14	13	12	11	10	9	8	7	6	5	4	3	2	1	0
Reserved						TSCFG7[4:0]					TSCFG6[4:0]				
						rw					rw				

Bits	Fields	Descriptions
31:10	Reserved	Must be kept at reset value.
9:5	TSCFG7[4:0]	Restart + event mode configuration The counter is reinitialized and started, the shadow registers are updated on the rising edge of the selected trigger input when these bits are not 0. 00000: Restart + event mode disable 00001: Internal trigger input 0 (ITI0) 00010: Internal trigger input 1 (ITI1) 00011: Internal trigger input 2 (ITI2) 00100: Internal trigger input 3 (ITI3) 00101: CI0 edge flag (CI0F_ED) 00110: The filtered output of channel 0 input (CI0FE0) 00111: The filtered output of channel 1 input (CI1FE1) 01000: Reserved 01001: Reserved 01010: Reserved 01011: The filtered output of multi mode channel 0 input (MCI0FEM0) 10011: Internal trigger input 14 (ITI14) Others: Reserved
4:0	TSCFG6[4:0]	External clock mode 0 configuration

The counter counts on the rising edges of the selected trigger when these bits are not 0.

00000: External clock mode 0 disable

00001: Internal trigger input 0 (ITI0)

00010: Internal trigger input 1 (ITI1)

00011: Internal trigger input 2 (ITI2)

00100: Internal trigger input 3 (ITI3)

00101: CI0 edge flag (CI0F_ED)

00110: The filtered output of channel 0 input (CI0FE0)

00111: The filtered output of channel 1 input (CI1FE1)

01000: Reserved

01001: Reserved

01010: Reserved

01011: The filtered output of multi mode channel 0 input (MCI0FEM0)

10011: Internal trigger input 14 (ITI14)

Others: Reserved

1.8.29. TIMERx configuration register 2 (SYSCFG_TIMERxCFG2, x=14, 40, 41, 42, 43, 44)

Address offset: 0x150 for TIMER14

Address offset: 0x18C for TIMER40

Address offset: 0x198 for TIMER41

Address offset: 0x1A4 for TIMER42

Address offset: 0x1B0 for TIMER43

Address offset: 0x1BC for TIMER44

Reset value: 0x0000 0000

TSCFG3[4:0], TSCFG4[4:0]..TSCFG7[4:0] are mutually exclusive and cannot be configured at the same time.

This register has to be accessed by word (32-bit).

31	30	29	28	27	26	25	24	23	22	21	20	19	18	17	16
Reserved											TSCFG15[4:0]				
													rw		
15	14	13	12	11	10	9	8	7	6	5	4	3	2	1	0
Reserved															

Bits	Fields	Descriptions
31:21	Reserved	Must be kept at reset value.
20:16	TSCFG15[4:0]	Internal trigger input source configuration

		00000: Reserved 00001: Internal trigger input 0 (ITI0) 00010: Internal trigger input 1 (ITI1) 00011: Internal trigger input 2 (ITI2) 00100: Internal trigger input 3 (ITI3) 00101: CI0 edge flag (CI0F_ED) 00110: Reserved 00111: Reserved 01000: Reserved 01001: Reserved 01010: Reserved 01011: Reserved 10011: Internal trigger input 14 (ITI14) Others: Reserved **Note:** When TSCFG15[4:0] is used, TSCFGy[4:0](y = 3..7) should be zero, otherwise, the ITS trigger cooperate with TSCFGy[4:0], and input source depend on TSCFGy[4:0].
15:0	Reserved	Must be kept at reset value.

1.8.30. User configuration register (SYSCFG_USERCFG)

Address offset: 0x300

Reset value: 0x0000 00XX

This register has to be accessed by word (32-bit).

31	30	29	28	27	26	25	24	23	22	21	20	19	18	17	16
Reserved															

15	14	13	12	11	10	9	8	7	6	5	4	3	2	1	0
Reserved									BOOT_MODE[2:0]			Reserved		BOR_TH[1:0]	
									r					r	

Bits	Fields	Descriptions
31:7	Reserved	Must be kept at reset value.
6:4	BOOT_MODE[2:0]	Boot mode These bits indicate the mode of BOOT. 000: BOOT from SRAM (ITCM/DTCM/RAM shared/AXI SRAM) 001: BOOT from Security 010: BOOT_SYS (BootLoader) 011: BOOT_USER (User flash OSPI0/1) Others: Reserved

3:2	Reserved	Must be kept at reset value.
1:0	BOR_TH[1:0]	BOR threshold status bits 00: No BOR function 01: BOR threshold value 1 10: BOR threshold value 2 11: BOR threshold value 3

1.9. AXI interconnect registers

AXI base address: 0x5100 0000

1.9.1. AXI peripheral ID4 register (AXI_PERIPH_ID4)

Address offset: 0x1FD0

Reset value: 0x0000 0004

This register has to be accessed by word (32-bit).

31	30	29	28	27	26	25	24	23	22	21	20	19	18	17	16
Reserved															

15	14	13	12	11	10	9	8	7	6	5	4	3	2	1	0
Reserved								4KBCNT[3:0]				JEP106CCODE[3:0]			
								r				r			

Bits	Fields	Descriptions
31:8	Reserved	Must be kept at reset value.
7:4	4KBCNT[3:0]	4KB count
3:0	JEP106CCODE[3:0]	JEP106 continuation code

1.9.2. AXI peripheral ID0 register (AXI_PERIPH_ID0)

Address offset: 0x1FE0

Reset value: 0x0000 0000

This register has to be accessed by word (32-bit).

31	30	29	28	27	26	25	24	23	22	21	20	19	18	17	16
Reserved															

15	14	13	12	11	10	9	8	7	6	5	4	3	2	1	0
Reserved								PARTNUM[7:0]							
											r				

Bits	Fields	Descriptions
31:8	Reserved	Must be kept at reset value.
7:0	PARTNUM[7:0]	Part number[7:0]

1.9.3. AXI peripheral ID1 register (AXI_PERIPH_ID1)

Address offset: 0x1FE4

Reset value: 0x0000 00B4

This register has to be accessed by word (32-bit).

31	30	29	28	27	26	25	24	23	22	21	20	19	18	17	16
Reserved															

15	14	13	12	11	10	9	8	7	6	5	4	3	2	1	0
Reserved								JEP106ID[3:0]				PARTNUM[11:8]			
									r				r		

Bits	Fields	Descriptions
31:8	Reserved	Must be kept at reset value.
7:4	JEP106ID[3:0]	JEP106 Identity[3:0]
3:0	PARTNUM[11:8]	Part number[11:8]

1.9.4. AXI peripheral ID2 register (AXI_PERIPH_ID2)

Address offset: 0x1FE8

Reset value: 0x0000 002B

This register has to be accessed by word (32-bit).

31	30	29	28	27	26	25	24	23	22	21	20	19	18	17	16
Reserved															

15	14	13	12	11	10	9	8	7	6	5	4	3	2	1	0
Reserved								PARTREV[3:0]				JEP106CF	JEP106ID[6:4]		
									r			r	r		

Bits	Fields	Descriptions
31:8	Reserved	Must be kept at reset value.
7:4	PARTREV[3:0]	Part revision
3	JEP106CF	JEP106 code flag

2:0	JEP106ID[6:4]	Part number[6:4]

1.9.5. AXI peripheral ID3 register (AXI_PERIPH_ID3)

Address offset: 0x1FEC

Reset value: 0x0000 0000

This register has to be accessed by word (32-bit).

31	30	29	28	27	26	25	24	23	22	21	20	19	18	17	16
Reserved															

15	14	13	12	11	10	9	8	7	6	5	4	3	2	1	0
Reserved								CUSTREV[3:0]				CUSTMOD[11:8]			
								r				r			

Bits	Fields	Descriptions
31:8	Reserved	Must be kept at reset value.
7:4	CUSTREV[3:0]	Customer version
3:0	CUSTMOD[11:8]	Customer modification

1.9.6. AXI componet ID0 register (AXI_COMP_ID0)

Address offset: 0x1FF0

Reset value: 0x0000 000D

This register has to be accessed by word (32-bit).

31	30	29	28	27	26	25	24	23	22	21	20	19	18	17	16
Reserved															

15	14	13	12	11	10	9	8	7	6	5	4	3	2	1	0
Reserved								PREAMB[7:0]							
												r			

Bits	Fields	Descriptions
31:8	Reserved	Must be kept at reset value.
7:0	PREAMB[7:0]	Preamble bits

1.9.7. AXI componet ID1 register (AXI_COMP_ID1)

Address offset: 0x1FF4

Reset value: 0x0000 00F0

This register has to be accessed by word (32-bit).

31	30	29	28	27	26	25	24	23	22	21	20	19	18	17	16
Reserved															

15	14	13	12	11	10	9	8	7	6	5	4	3	2	1	0
Reserved								CLASS[3:0]				PREAMB[11:8]			
								r				r			

Bits	Fields	Descriptions
31:8	Reserved	Must be kept at reset value.
7:4	CLASS[3:0]	Component class
3:0	PARTNUM[11:8]	Preamble bits

1.9.8. AXI componet ID2 register (AXI_COMP_ID2)

Address offset: 0x1FF8

Reset value: 0x0000 0005

This register has to be accessed by word (32-bit).

31	30	29	28	27	26	25	24	23	22	21	20	19	18	17	16
Reserved															

15	14	13	12	11	10	9	8	7	6	5	4	3	2	1	0
Reserved								PREAMB[19:12]							
											r				

Bits	Fields	Descriptions
31:8	Reserved	Must be kept at reset value.
7:0	PREAMB[19:12]	Preamble bits

1.9.9. AXI componet ID3 register (AXI_COMP_ID3)

Address offset: 0x1FFC

Reset value: 0x0000 00B1

This register has to be accessed by word (32-bit).

31	30	29	28	27	26	25	24	23	22	21	20	19	18	17	16
Reserved															

15	14	13	12	11	10	9	8	7	6	5	4	3	2	1	0
Reserved								PREAMB[27:20]							
											r				

Bits	Fields	Descriptions
31:8	Reserved	Must be kept at reset value.
7:0	PREAMB[27:20]	Preamble bits

1.9.10. AXI Master Port x bus matrix issuing functionality control register (AXI_MPxBM_ISS_CTL)

Address offset: 0x2008 + 0x1000 * x, where x = 0 to 7
Reset value: 0x0000 0000

This register has to be accessed by word (32-bit).

31	30	29	28	27	26	25	24	23	22	21	20	19	18	17	16
Reserved															

15	14	13	12	11	10	9	8	7	6	5	4	3	2	1	0
Reserved														WR_ISSOV	RD_ISSOV
														rw	rw

Bits	Fields	Descriptions
31:2	Reserved	Must be kept at reset value.
1	WR_ISSOV	Override target write issuing function 0: Normal issuing function 1: The bus matrix write issuing capability is set to 1
0	RD_ISSOV	Override target read issuing function 0: Normal issuing function 1: The bus matrix read issuing capability is set to 1

1.9.11. AXI Master Port x bus matrix functionality control register (AXI_MPxBM_CTL)

Address offset: 0x2024 + 0x1000 * x, where x = 0, 1, 6 and 7
Reset value: 0x0000 0000

This register has to be accessed by word (32-bit).

31	30	29	28	27	26	25	24	23	22	21	20	19	18	17	16
Reserved															

15	14	13	12	11	10	9	8	7	6	5	4	3	2	1	0
Reserved															BPDIS
															rw

Bits	Fields	Descriptions
31:1	Reserved	Must be kept at reset value.
0	BPDIS	Beats packing function disable configure 0: Normal operation 1: Disable beats packing function

1.9.12. AXI Master Port x long burst functionality control register (AXI_MPx_LB_CTL)

Address offset: 0x202C + 0x1000 * x, where x = 0 and 1
Reset value: 0x0000 0000

This register has to be accessed by word (32-bit).

31	30	29	28	27	26	25	24	23	22	21	20	19	18	17	16
Reserved															

15	14	13	12	11	10	9	8	7	6	5	4	3	2	1	0
Reserved															LBEN
															rw

Bits	Fields	Descriptions
31:1	Reserved	Must be kept at reset value.
0	LBEN	Control long burst function 0: Disable long burst generated at the output of the ASIB 1: Enable long burst generated at the output of the ASIB

1.9.13. AXI Master Port x issuing functionality control register (AXI_MPx_ISS_CTL)

Address offset: 0x2108 + 0x1000 * x, where x = 0, 1, 2, and 7
Reset value: 0x0000 0000

This register has to be accessed by word (32-bit).

31	30	29	28	27	26	25	24	23	22	21	20	19	18	17	16
Reserved															

15	14	13	12	11	10	9	8	7	6	5	4	3	2	1	0
Reserved														WR_ISSOV	RD_ISSOV
														rw	rw

Bits	Fields	Descriptions
31:2	Reserved	Must be kept at reset value.
1	WR_ISSOV	Override AMIB write issuing function 0: Normal issuing function 1: The AMIB write issuing capability is forced set to 1
0	RD_ISSOV	Override AMIB read issuing function 0: Normal issuing function 1: The AMIB read issuing capability is forced set to 1

1.9.14. AXI Slave Port x functionality control register (AXI_SPx_CTL)

Address offset: 0x42024 + 0x1000 * x, where x = 0 and 2

Reset value: 0x0000 0000

This register has to be accessed by word (32-bit).

31	30	29	28	27	26	25	24	23	22	21	20	19	18	17	16
Reserved															

15	14	13	12	11	10	9	8	7	6	5	4	3	2	1	0
Reserved															TRANSALT
															rw

Bits	Fields	Descriptions
31:1	Reserved	Must be kept at reset value.
0	TRANSALT	Transaction alteration configure 0: Normal operation 1: Transaction unaltered where allowed

1.9.15. AXI Slave Port x AHB issuing functionality control register (AXI_SPx_AHBISS_CTL)

Address offset: 0x42028 + 0x1000 * x, where x = 0 and 2

Reset value: 0x0000 0000

This register has to be accessed by word (32-bit).

31	30	29	28	27	26	25	24	23	22	21	20	19	18	17	16
Reserved															

15	14	13	12	11	10	9	8	7	6	5	4	3	2	1	0
Reserved														RD_AHB_ISSOV	WR_AHB_ISSOV

rw rw

Bits	Fields	Descriptions
31:2	Reserved	Must be kept at reset value.
1	RD_AHB_ISSOV	Converts AHB-Lite read transaction to single beat AXI transaction function 0: Override disabled 1: Override enabled
0	WR_AHB_ISSOV	Converts AHB-Lite write transaction to single beat AXI transaction function 0: Override disabled 1: Override enabled

1.9.16. AXI Slave Port x read QOS control register (AXI_SPx_RDQOS_CTL)

Address offset: 0x42100 + 0x1000 * x, where x = 0 to 5

Reset value: 0x0000 0000

This register has to be accessed by word (32-bit).

31	30	29	28	27	26	25	24	23	22	21	20	19	18	17	16
Reserved															

15	14	13	12	11	10	9	8	7	6	5	4	3	2	1	0
Reserved												RDQOS[3:0]			
												rw			

Bits	Fields	Descriptions
31:4	Reserved	Must be kept at reset value.
3:0	RDQOS[3:0]	Read channel QoS configure 0000: Lowest priority … 1111: Highest priority

1.9.17. AXI Slave Port x write QOS control register (AXI_SPx_WRQOS_CTL)

Address offset: 0x42104 + 0x1000 * x, where x = 0 to 5

Reset value: 0x0000 0000

This register has to be accessed by word (32-bit).

31	30	29	28	27	26	25	24	23	22	21	20	19	18	17	16
Reserved															

15	14	13	12	11	10	9	8	7	6	5	4	3	2	1	0
Reserved												WRQOS[3:0]			

rw

Bits	Fields	Descriptions
31:4	Reserved	Must be kept at reset value.
3:0	WRQOS[3:0]	Write channel QoS configure 0000: Lowest priority … 1111: Highest priority

1.9.18. AXI Slave Port x issuing functionality control register (AXI_SPx_ISS_CTL)

Address offset: 0x42108 + 0x1000 * x, where x = 0 to 5
Reset value: 0x0000 0000

This register has to be accessed by word (32-bit).

31	30	29	28	27	26	25	24	23	22	21	20	19	18	17	16
Reserved															

15	14	13	12	11	10	9	8	7	6	5	4	3	2	1	0
Reserved														WR_ISSOV	RD_ISSOV
														rw	rw

Bits	Fields	Descriptions
31:2	Reserved	Must be kept at reset value.
1	WR_ISSOV	Override ASIB write issuing function 0: Normal issuing function 1: The ASIB write issuing capability is forced set to 1
0	RD_ISSOV	Override ASIB read issuing function 0: Normal issuing function 1: The ASIB read issuing capability is forced set to 1

1.10. Device electronic signature

The device electronic signature contains memory density information and the 96-bit unique device ID. The 96-bit unique device ID is unique for each device. It can be used as serial numbers, or part of security keys, etc.

1.10.1. Memory density information

Base address: 0x1FF0 F7E0

The value is factory programmed and can never be altered by user.

31	30	29	28	27	26	25	24	23	22	21	20	19	18	17	16
FLASH_DENSITY[15:0]															
r															

15	14	13	12	11	10	9	8	7	6	5	4	3	2	1	0
SRAM_DENSITY[15:0]															
r															

Bits	Fields	Descriptions
31:16	FLASH_DENSITY [15:0]	Flash memory density The value indicates the Flash memory density of the device in Kbytes. Example: 0x0020 indicates 32 Kbytes.
15:0	SRAM_DENSITY [15:0]	SRAM density The value indicates the on-chip SRAM density of the device in Kbytes. Example: 0x0008 indicates 8 Kbytes.

1.10.2. Unique device ID (96 bits)

Base address: 0x1FF0 F7E8

The value is factory programmed and can never be altered by user.

31	30	29	28	27	26	25	24	23	22	21	20	19	18	17	16
UNIQUE_ID[31:16]															
r															

15	14	13	12	11	10	9	8	7	6	5	4	3	2	1	0
UNIQUE_ID[15:0]															
r															

Bits	Fields	Descriptions
31:0	UNIQUE_ID[31:0]	Unique device ID

Base address: 0x1FF0 F7EC

The value is factory programmed and can never be altered by user.

31	30	29	28	27	26	25	24	23	22	21	20	19	18	17	16
UNIQUE_ID[63:48]															
r															

15	14	13	12	11	10	9	8	7	6	5	4	3	2	1	0

UNIQUE_ID[47:32]
r

Bits	Fields	Descriptions
31:0	UNIQUE_ID[63:32]	Unique device ID

Base address: 0x1FF0 F7F0

The value is factory programmed and can never be altered by user.

31	30	29	28	27	26	25	24	23	22	21	20	19	18	17	16
UNIQUE_ID[95:80]															
r															

15	14	13	12	11	10	9	8	7	6	5	4	3	2	1	0
UNIQUE_ID[79:64]															
r															

Bits	Fields	Descriptions
31:0	UNIQUE_ID[95:64]	Unique device ID

2. RAM ECC monitor unit (RAMECCMU)

The GD32H7xx device features two RAM ECC monitor units (RAMECCMU) in Region 0 and Region1 separately. It provides a method to verify ECC status for applications and execute error handling when errors occur.

2.1. Characteristics

The main functions of RAMECCMU are the following:

- RAM ECC monitor for each Region
- Identification for RAM failing address/data

2.2. Function overview

GD32H7xx features two RAMECC monitor units mounted on AHB3 in Region 0 and AHB2 in Region 1 separately. The block architechture of RAMECCMU is shown as ***Figure 2-1. Block architecture of RAMECCMU***.

Figure 2-1. Block architecture of RAMECCMU

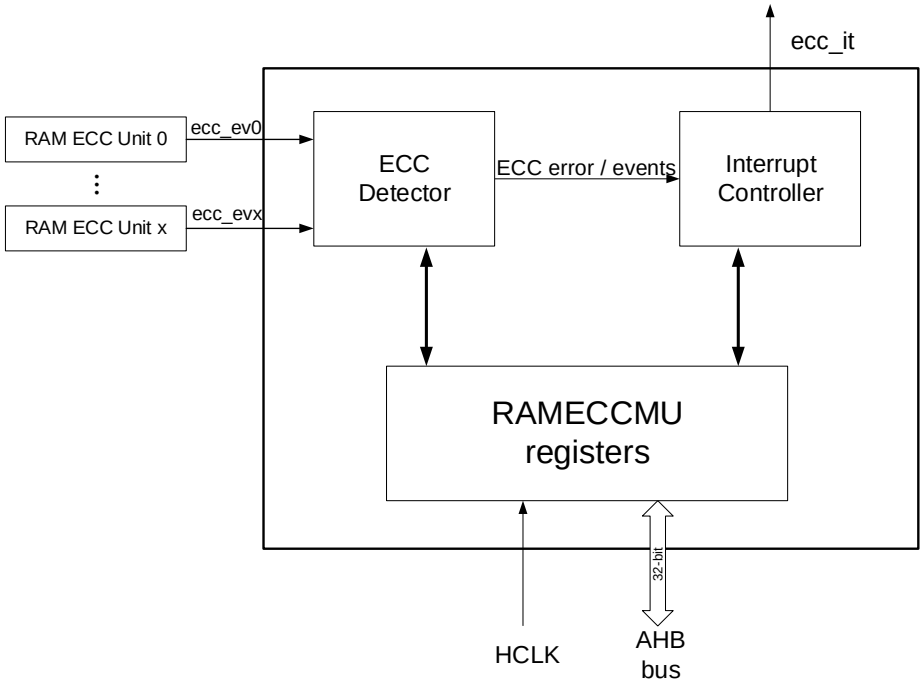

There are two RAMECC monitor units in GD32H7xx series which are described in ***Table 2-1. RAMECC monitor x unit for Region 0 (x=0..4)*** and ***Table 2-2. RAMECC monitor x unit for Region 1 (x=0..2)***.

Table 2-1. RAMECC monitor x unit for Region 0 (x=0..4)

RAMECC monitor number	RAMECC monitor status
0	AXI SRAM ECC
1	ITCM-RAM ECC
2	DTCM-RAM ECC(D0TCM)
3	DTCM-RAM ECC(D1TCM)
4	RAM shared(ITCM/DTCM/AXI SRAM) ECC

Table 2-2. RAMECC monitor x unit for Region 1 (x=0..2)

RAMECC monitor number	RAMECC monitor status
0	SRAM0 ECC
1	SRAM1 ECC
2	Backup RAM(BKPSRAM) ECC

2.3. Register definition

RAMECCMU Region 0 base address: 0x5200 9000
RAMECCMU Region 1 base address: 0x4802 3000

2.3.1. RAMECCMU global interruput register (RAMECCMU_INT)

Address offset: 0x00
Reset value: 0x0000 0000

This register has to be accessed by word (32-bit).

31	30	29	28	27	26	25	24	23	22	21	20	19	18	17	16
Reserved															

15	14	13	12	11	10	9	8	7	6	5	4	3	2	1	0
Reserved												GEDERRBWIE	GEDERRIE	GESERRIE	GEIE
												rw	rw	rw	rw

Bits	Fields	Descriptions
31:4	Reserved	Must be kept at reset value.
3	GEDERRBWIE	Global ECC double error on byte write interrupt enable 0: No interrupt generated 1: Interrupt generated when ECC double detection error occurs during a byte write operation to RAM
2	GEDERRIE	Global ECC double error interrupt enable 0: No interrupt generated 1: Interrupt generated when ECC double detection error occurs during a read operation from RAM
1	GESERRIE	Global ECC single error interrupt enable 0: No interrupt generated 1: Interrupt generated when ECC single error occurs during a read operation from RAM
0	GEIE	Global ECC interrupt enable 0: No interrupt generated 1: Interrupt generated when one of GEDERRBWIE, GEDERRIE or GESERRIE error occurs

2.3.2. RAMECCMU monitor x control register (RAMECCMU_MxCTL)

Address offset: 0x20 * (x+1), (x is ECC monitoring number, x=0..4 for Region 0, while x=0..2

for Region 1)

Reset value: 0x0000 0000

This register has to be accessed by word (32-bit).

31	30	29	28	27	26	25	24	23	22	21	20	19	18	17	16
Reserved															

15	14	13	12	11	10	9	8	7	6	5	4	3	2	1	0
Reserved										ECCERRLATEN	ECCDERRBWIE	ECCDERRIE	ECCSERRIE	Reserved	
										rw	rw	rw	rw		

Bits	Fields	Descriptions
31:6	Reserved	Must be kept at reset value.
5	ECCERRLATEN	ECC error latching enable 0: No error context are latched to their respective registers when ECC error occurs 1: Error context are latched to their respective registers when ECC error occurs
4	ECCDERRBWIE	ECC double error on byte write interrupt enable 0: No interrupt generated 1: Interrupt generated when ECC double error occurs on byte write operation to RAM
3	ECCDERRIE	ECC double error interrupt enable 0: No interrupt generated 1: Interrupt generated when ECC double error occurs on read operation from RAM
2	ECCSERRIE	ECC single error interrupt enable 0: No interrupt generated 1: Interrupt generated when ECC single error occurs on read operation from RAM
1:0	Reserved	Must be kept at reset value.

2.3.3. RAMECCMU monitor x status register (RAMECCMU_MxSTAT)

Address offset: 0x24 + 0x20 * x, (x= ECC monitoring number, x=0..4 for Region 0, while x=0..2 for Region 1)

Reset value: 0x0000 0000

This register has to be accessed by word (32-bit).

31	30	29	28	27	26	25	24	23	22	21	20	19	18	17	16
Reserved															

15	14	13	12	11	10	9	8	7	6	5	4	3	2	1	0
Reserved													ECCDERRBWDF	ECCDERRDF	ECCSERRDCF

rc_w0	rc_w0	rc_w0

Bits	Fields	Descriptions
31:3	Reserved	Must be kept at reset value.
2	ECCDERRBWDF	ECC double error on byte write detected flag This bit is set by hardware and cleared by writing 0. 0: Double error is detected during read when ECCDERRDF is set 1: Double error detected during unaligned write
1	ECCDERRDF	ECC double error detected flag 0: No double error detected 1: Double error detected
0	ECCSERRDCF	ECC single error detected and corrected flag 0: No error detected and corrected 1: Error detected and corrected

2.3.4. RAMECCMU monitor x failing address register (RAMECCMU_MxFADDR)

Address offset: 0x28 + 0x20 * x, (x= ECC monitoring number, x=0..4 for Region 0, while x=0..2 for Region 1)

Reset value: 0x2400 0000 for AXI SRAM
0x0000 0000 for ITCM
0x2000 0000 for D0TCM
0x2000 0004 for D1TCM
0x2408 0000 for RAM shared(ITCM/DTCM/AXI SRAM)

0x3000 0000 for SRAM0
0x3000 4000 for SRAM1
0x3880 0000 for BKPSRAM

This register has to be accessed by word (32-bit).

31	30	29	28	27	26	25	24	23	22	21	20	19	18	17	16
ECCFADDR[31:16]															
r															

15	14	13	12	11	10	9	8	7	6	5	4	3	2	1	0
ECCFADDR[15:0]															
r															

Bits	Fields	Descriptions
31:0	ECCFADDR[31:0]	ECC error failing address This register contains the address which generated ECC error when error occurs.

2.3.5. RAMECCMU monitor x failing data low register (RAMECCMU_MxFDL)

Address offset: 0x2C + 0x20 * x, (x= ECC monitoring number, x=0..4 for Region 0, while x=0..2 for Region 1)

Reset value: 0x0000 0000

This register has to be accessed by word (32-bit).

31	30	29	28	27	26	25	24	23	22	21	20	19	18	17	16
ECCFDL[31:16]															
r															

15	14	13	12	11	10	9	8	7	6	5	4	3	2	1	0
ECCFDL[15:0]															
r															

Bits	Fields	Descriptions
31:0	ECCFDL[31:0]	ECC failing data low bits This register contains the LSB of data which generated ECC error when error occurs or the full memory word for 32-bit word SRAM.

2.3.6. RAMECCMU monitor x failing data high register (RAMECCMU_MxFDH)

Address offset: 0x30 + 0x20 * x, (x= ECC monitoring number, x=0..4 for Region 0, while x=0..2 for Region 1)

Reset value: 0x0000 0000

This register has to be accessed by word (32-bit).

31	30	29	28	27	26	25	24	23	22	21	20	19	18	17	16
ECCFDH[31:16]															
r															

15	14	13	12	11	10	9	8	7	6	5	4	3	2	1	0
ECCFDH[15:0]															
r															

Bits	Fields	Descriptions
31:0	ECCFDH[31:0]	ECC failing data high bits (64-bit) This register contains the MSB of data which generated ECC error when error occurs.

2.3.7. RAMECCMU monitor x failing ECC error code register (RAMECCMU_MxFECODE)

Address offset: 0x34 + 0x20 * x, (x= ECC monitoring number, x=0..4 for Region 0, while x=0..2 for Region 1)

Reset value: 0x0000 0000

This register has to be accessed by word (32-bit).

31	30	29	28	27	26	25	24	23	22	21	20	19	18	17	16
ECCFECODE[31:16]															
r															

15	14	13	12	11	10	9	8	7	6	5	4	3	2	1	0
ECCFECODE[15:0]															
r															

Bits	Fields	Descriptions
31:0	ECCFECODE[31:0]	ECC failing error code This register contains the index where the bit error occurs and the ECC code.

3. Flash memory controller (FMC)

3.1. Overview

The flash memory controller, FMC, provides all the necessary functions for the on-chip flash memory. It also provides sector erase, mass erase, program operations for flash memory.

3.2. Characteristics

- Up to 3840KB of on-chip flash memory for instruction and data.
- Double-word/word/half-word/byte reading operation.
- Double-word/word programming, sector erase and mass erase operation.
- Option bytes are uploaded to the option byte control registers on every system reset
- Flash security protection to prevent illegal code/data access.
- Sector erase/program protection to prevent unexpected operation.
- Provides one execute-only dedicated code read protection (DCRP) area.
- Provides one secure user area which is accessible only in secure mode.

3.3. Function overview

3.3.1. Flash memory architecture

FMC supports 64-bit AXI interface to access code/data and 32-bit AHB slave interface to access register. ***Figure 3-1. FMC block diagram*** shows the details.

Figure 3-1. FMC block diagram

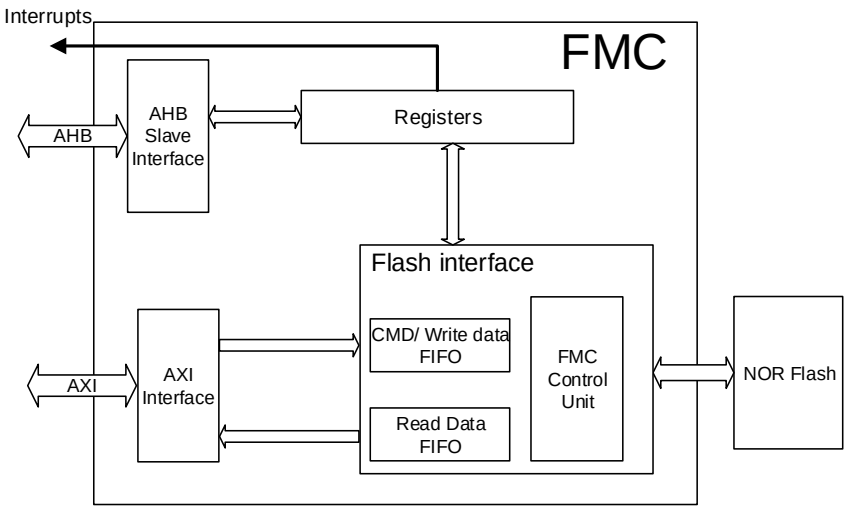

The AXI interface of FMC can support read and write operation at the same time. The AXI slave interface supports the following access types:

- Flash memory single read operations supporting 1,2,4,8-byte.
- Flash memory incrementing burst read operations supporting size 1,2,4,8-byte; burst length up to 128 bytes.
- Flash memory wrapped burst read operations supporting size 8-byte with 1,2,4,8-beat.
- Single write accesses supporting size 4,8-byte.
- Burst write accesses supporting size 8-byte with most 32-beat, and burst write with 4-beat is most efficient.
- If using the burst write which supporting size 8-byte with multi-beat, only MDMA can be used instead of DMA, otherwise unpredictable errors will occur;
- Write address must align with size.
- Address can not across 4K boundary in one burst read/write operation.
- All operations exclusive above description will generate a bus error, read operation return zero, write operation is ignored.

The AHB slave interface supports 32-bit word accesses.

The flash memory consists of 3840KB main flash organized into 960 sectors with 4KB and 64KB information block. Each sector can be erased individually.

Table 3-1. GD32H7xx base address and size for flash memory shows the details of flash organization

Table 3-1. GD32H7xx base address and size for flash memory

Block	Name	Address range	Size(bytes)
Main flash block	Sector 0	0x0800 0000 - 0x0800 0FFF	4KB
	Sector 1	0x0800 1000 - 0x0800 1FFF	4KB
	Sector 2	0x0800 2000 - 0x0800 2FFF	4KB
	. . .	. . .	. . .
	Sector 959	0x083B F000 - 0x083B FFFF	4KB
Information block	Bootloader	0x1FF0 0000 - 0x1FF0 FFFF	64KB

3.3.2. Read operations

The flash can be addressed directly as a common memory space. Any instruction fetch and the data access from the flash are through AXI interface from the CPU.

FMC internal RTDEC function

FMC internal RTDEC function means that when reading data from Flash, it can be decrypted in real time according to the EFUSE module's configuration of AES key. (Data written to Flash is encrypted already). There have on-time decrypt function when AESEN bit in EFUSE_USER_CTL register is set. This is implement by hardware on-time and invisible by software. The AES key use AESKEYx[31:0] bits in EFUSE_AES_KEYx to set. The

initialization vector AES_IV[127:0] = AESIV[95:0] || 12'b0 || ReadAddress[23:4]. User can modify the high 96 bits of the initial vector (AESIV[95:0]) by modifying the FMC_AESIVx_MDF register. The AESIV[95:0] is formed with [AESIV2, AESIV1,AESIV0]. When the initial vector needs to be modified, user must write the FMC_ASIV0_MDF, FMC_ASIV1_MDF, and FMC_ASIV2_MDF registers in sequence. After the FMC_AESIV2_MDF register is written, the value in the FMC_ASIV0/1/2_MDF registers will be updated to the AES IV area.

The following steps show the AESIV[95:0] modification sequence.

1. Unlock the FMC_CTL register if necessary.
2. Check the BUSY bit in FMC_STAT register to confirm that no Flash memory operation is in progress (BUSY equals to 0). Otherwise, wait until the operation has finished.
3. Write the initialization vector AES_IV[32:63] into FMC_AESIV0_MDF, AES_IV[64:95] into FMC_AESIV1_MDF, and AES_IV[96:127] into FMC_AESIV2_MDF register in sequence;
4. Once the FMC_AESIV2_MDF register is written, the value in the FMC_AESIV0/1/2_MDF register will be automatically updated to the AES IV area.
5. Wait until all the operations have been finished by checking the value of the BUSY bit in FMC_STAT register.
6. Launch a system reset to start option bytes loading.
7. Read from FMC_AESIVx_EFT register and verify the values if required.

When the operation is executed successfully, the ENDF in FMC_STAT register is set, and an interrupt will be triggered by FMC if the ENDIE bit in the FMC_CTL register is set.

NO-RTDEC function

Area can be configured without RTDEC function by FMC_NODEC, even if AESEN bit in EFUSE_USER_CTL register is set.

3.3.3. Unlock the FMC_CTL and FMC_OBCTL register

After reset, the FMC_CTL register is not accessible in write mode, and the LK bit in FMC_CTL register is 1. An unlocking sequence consists of two write operations to the FMC_KEY register to open the access to the FMC_CTL register. The two write operations are writing 0x45670123 and 0xCDEF89AB to the FMC_KEY register. After the two write operations, the LK bit in FMC_CTL register is reset to 0 by hardware. The software can lock the FMC_CTL again by setting the LK bit in FMC_CTL register to 1. Any wrong operations to the FMC_KEY, set the LK bit to 1, and lock FMC_CTL register, and lead to a bus error. The FMC_OBCTL registers are still protected even the FMC_CTL is unlocked. The unlocking sequence is two write operations, which are writing 0x08192A3B and 0x4C5D6E7F to FMC_OBKEY register. After the two write operations, the OBLK bit in FMC_OBCTL register is reset to 0 by hardware. The software can lock the FMC_OBCTL again by setting the OBLK bit in FMC_OBCTL register to 1.

3.3.4. Sector erase

The FMC provides a sector erase function which is used to initialize the contents of a main flash block sector to a high state. Each sector can be erased independently without affecting the contents of other sectors. The following steps show the access sequence of the registers for a sector erase operation.

1. Unlock the FMC_CTL register if necessary.
2. Check the BUSY bit in FMC_STAT register to confirm that no flash memory operation is in progress (BUSY equals to 0). Otherwise, wait until the operation has finished.
3. Set the SER bit in FMC_CTL register.
4. Write the sector address ADDR to FMC_ADDR register.
5. Send the sector erase command to the FMC by setting the START bit in FMC_CTL register.
6. Wait until all the operations have finished by checking the value of the BUSY bit in FMC_STAT register.
7. Read and verify the sector if required.

If a main flash sector contain DCRP, secure user or erase/program protected data, the sector erase operation is stopped and the WPERR bit is set in the FMC_STAT register.

If mass erase and sector erase is request at the same time, the mass erase operation will replace the sector erase operation.

When the operation is executed successfully, the ENDF in FMC_STAT register is set, and an interrupt will be triggered by FMC if the ENDIE bit in the FMC_CTL register is set. Note that a correct target sector address must be confirmed. Or the software may run out of control if the target erase sector is being used to fetch codes or to access data. The FMC will not provide any notification when this occurs. Additionally, the sector erase operation will be ignored on erase/program protected sectors. In this condition, a erase/program protection error interrupt will be triggered by the FMC if the WPERRIE bit in the FMC_CTL register is set. The software can check the WPERR bit in the FMC_STAT register to detect this condition in the interrupt handler. ***Figure 3-2. Proccess of sector erase operation*** shows the sector erase operation flow.

Figure 3-2. Proccess of sector erase operation

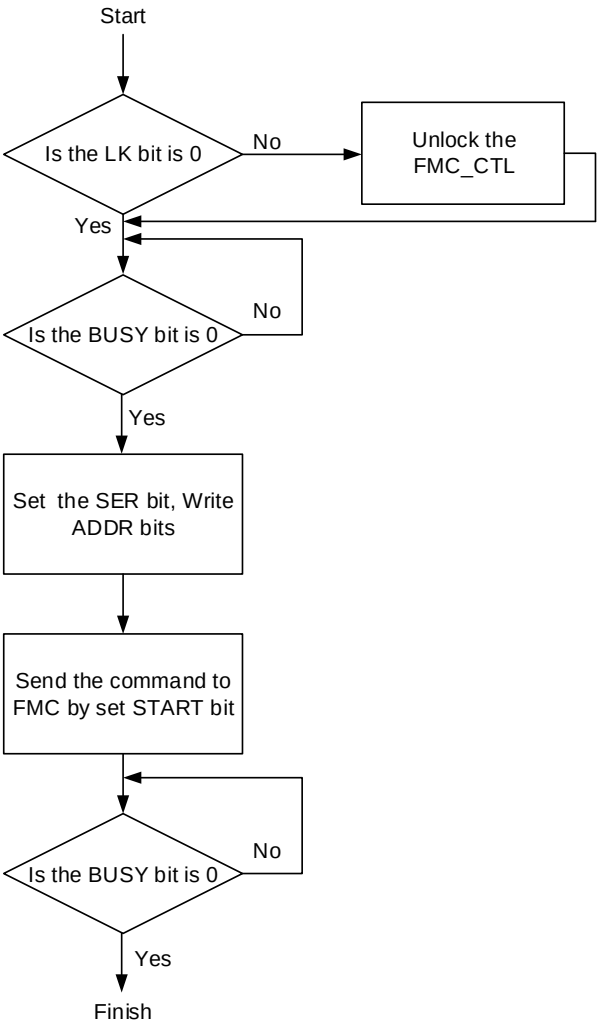

Note: When programming, erasing, especially the mass erasing, abnormal power off or reset should be avoided as far as possible, otherwise unpredictable consequences may occur. If there is a risk of power off and reset, avoid using protection-removed mass erasing.

3.3.5. Mass erase

Typical mass erase

The FMC provides a typical mass erase function which is used to erase all sectors except sectors contain secure user or protected data. This erase can affect by setting the MER bit to 1 in the FMC_CTL register. The following steps show the typical mass erase register access sequence.

1. Unlock the FMC_CTL register if necessary.
2. Check the BUSY bit in FMC_STAT register to confirm that no flash memory operation is in progress (BUSY equals to 0). Otherwise, wait until the operation has finished.
3. Set the MER bit in the FMC_CTL register to enable mass erase operation.
4. Send the mass erase command to the FMC by setting the START bit in FMC_CTL register.

5. Wait until all the operations have been finished by checking the value of the BUSY bit in FMC_STAT register.
6. Read and verify the flash memory if required.

If mass erase and sector erase is request at the same time, the mass erase operation will replace the sector erase operation.

When the operation is executed successfully, the ENDF in FMC_STAT register is set, and an interrupt will be triggered by FMC if the ENDIE bit in the FMC_CTL register is set. Since all flash data except sectors contain secure user or protected data will be modified to a value of 0xFFFF_FFFF, the mass erase operation can be implemented using a program that runs in SRAM or by using the debugging tool that accesses the FMC registers directly.

Figure 3-3. Process of typical mass erase operation shows the typical mass erase operation flow.

Figure 3-3. Process of typical mass erase operation

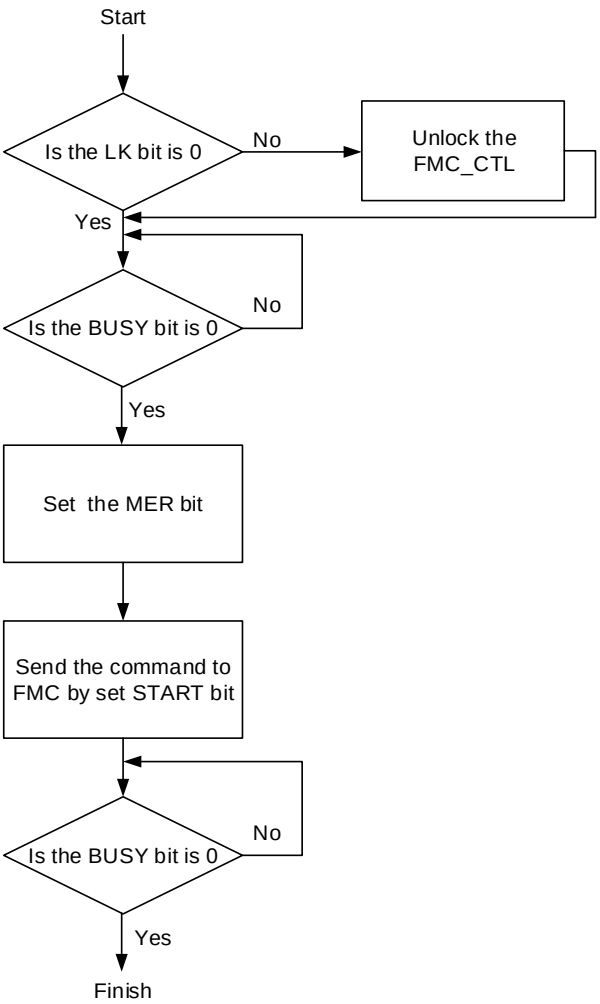

Note: When programming, erasing, especially the mass erasing, abnormal power off or reset should be avoided as far as possible, otherwise unpredictable consequences may occur. If there is a risk of power off and reset, avoid using protection-removed mass erasing.

Protection-removed mass erase

The FMC provides a protection-removed mass erase function which is used to erase all sectors include sectors contain secure user or protected data. This erase can affect by setting the MER bit to 1 in the FMC_CTL register. The following steps show the protection-removed mass erase register access sequence.

1. Unlock the FMC_OBCTL register if necessary.
2. If a DCRP area exists, set DCRP_EREN bit in FMC_DCRPADDR_MDF or in FMC_DCRPADDR_EFT register. And set DCRP end address less than DCRP start address by programming DCRP_AREA_END < DCRP_AREA_START to FMC_DCRPADDR_MDF register.
3. If a secure user area exists, set SCR_EREN bit in FMC_SCRADDR_MDF or in FMC_SCRADDR_EFT register. And set secure user area end address less than secure user area start address by programming SCR_AREA_END < SCR_AREA_START to FMC_SCRADDR_MDF register.
4. Set all WP bits in FMC_WP_MDF register if any erase/program protected sector exists.
5. Unlock the FMC_CTL register if necessary.
6. Check the BUSY bit in FMC_STAT register to confirm that no flash memory operation is in progress (BUSY equals to 0). Otherwise, wait until the operation has finished.
7. Set the MER bit in the FMC_CTL register to enable mass erase operation.
8. Send the mass erase command to the FMC by setting the START bit in FMC_CTL register.
9. Wait until all the operations have been finished by checking the value of the BUSY bit in FMC_STAT register. The operation has erased the whole main flash memory including the sectors containing DCRP-protected and/or secure user data. And the correspond option bytes modified automatically performed for disable all the protections.
10. Read and verify the flash memory if required.

Note: (1) In the above sequence, except for the option bytes indicated above, other option bytes cannot be modified. (2) Only if all the conditions in steps 3, 4, and 5 are satisfied, the protection-removed mass erase will be performed. But if any of the steps are not met, only the typical mass erase will be performed, and no error will be raised.

If mass erase and sector erase is request at the same time, the mass erase operation will replace the sector erase operation.

When the operation is executed successfully, the ENDF in FMC_STAT register is set, and an interrupt will be triggered by FMC if the ENDIE bit in the FMC_CTL register is set. Since all flash data except sectors contain secure user or protected data will be modified to a value of 0xFFFF_FFFF, the mass erase operation can be implemented using a program that runs in SRAM or by using the debugging tool that accesses the FMC registers directly.

Figure 3-4. Process of protection-removed mass erase operation shows the protection-removed mass erase operation flow.

Figure 3-4. Process of protection-removed mass erase operation

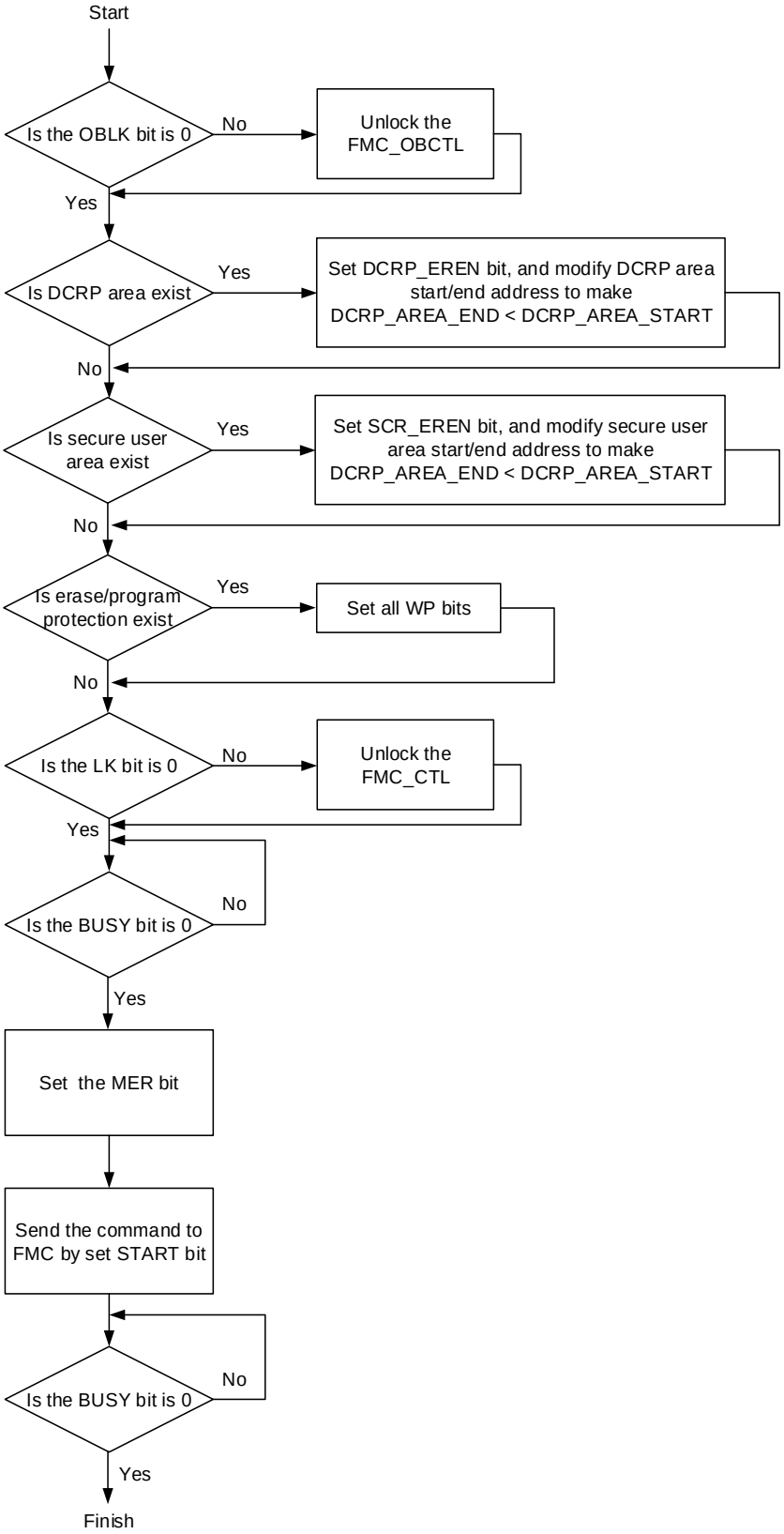

Note: When programming, erasing, especially the mass erasing, abnormal power off or reset should be avoided as far as possible, otherwise unpredictable consequences may occur. If there is a risk of power off and reset, avoid using protection-removed mass erasing.

3.3.6. Main flash Programming

The FMC provides a 64-bit/32-bit programming function by AXI interface which is used to modify the main flash block contents. The following steps show the register access sequence of the word programming operation.

1. Unlock the FMC_CTL register if necessary.
2. Check the BUSY bit in FMC_STAT register to confirm that no flash memory operation is in progress (BUSY equals to 0). Otherwise, wait until the operation has finished.
3. Set the PG bit in FMC_CTL register.
4. Write the data to be programed with desired absolute address (0x08XX XXXX).
5. Wait until all the operations have been finished by checking the value of the BUSY bit in FMC_STAT register.
6. Read and verify the Flash memory if required.

When the operation is executed successfully, the ENDF in FMC_STAT register is set, and an interrupt will be triggered by FMC if the ENDIE bit in the FMC_CTL register is set. Note that the PG bit must be set before the double-word/word programming operation, or else PGSERR bit in the FMC_STAT register will be set, and an interrupt will be triggered by FMC if the PGSERRIE bit in the FMC_CTL register is set. Additionally, the program operation will be ignored on erase/program protected sectors and WPERR bit in FMC_STAT is set, and an interrupt will be triggered by FMC if the WPERRIE bit in the FMC_CTL register is set. The software can check the PGSERR or WPERR bit in the FMC_STAT register to detect which condition occurred in the interrupt handler. ***Figure 3-5. Proccess of program operation*** displays the word programming operation flow.

User can enable check whether the programming area is all 0xFF before programming by set PGCHEN bit in FMC_CTL register. If the programming area is not all 0xFF, the PGSERR in the FMC_STAT register will be set.

If PGCHEN is set and burst program is enable, FMC will check the flash data according to the burst size. If it is checked that the data is not all 0xFF, this beat program is failed and PGSERR bit in FMC_STAT register is set. But other beats can be written normally.

Figure 3-5. Proccess of program operation

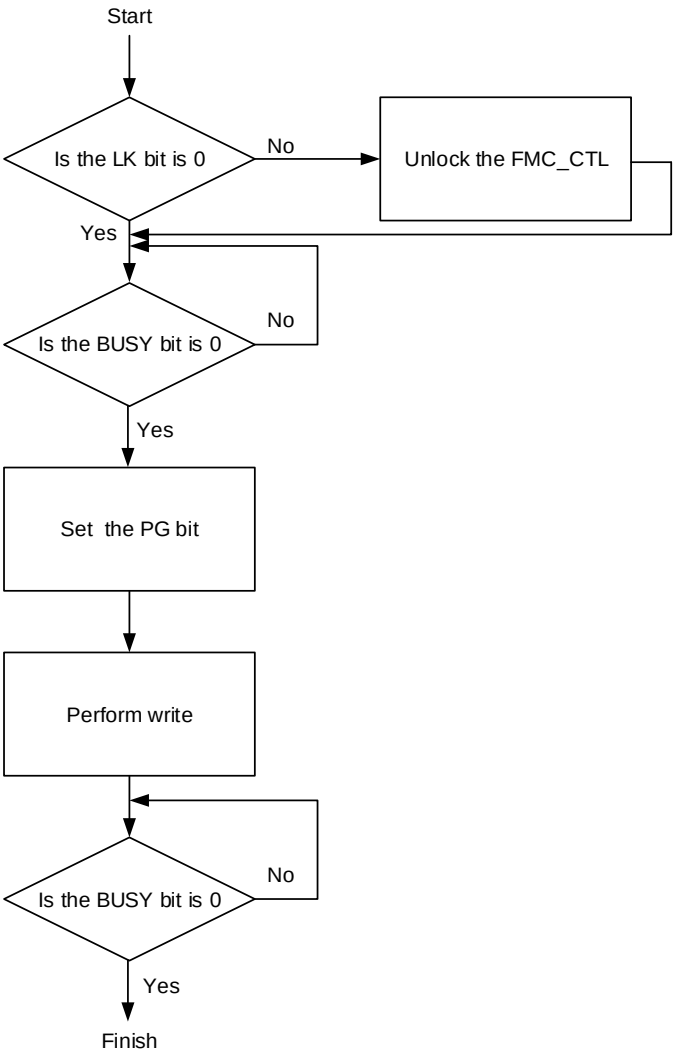

Note: When programming, erasing, especially the mass erasing, abnormal power off or reset should be avoided as far as possible, otherwise unpredictable consequences may occur. If there is a risk of power off and reset, avoid using protection-removed mass erasing.

3.3.7. Option bytes

Option bytes description

FMC provides two groups of option byte registers:

- "_EFT" registers group (read-only)

These registers store the effective value of the option bytes. After a option byte modification operation, system reset or wakeup from standby mode, the registers values will be automatically loaded from non-volatile memory.

- "_MDF" registers group (read/write)

These registers store the modification of the option bytes. When user wants to modify the option byte, the desired option byte value needs to be written to the register group.

The option bytes block is reloaded to "_EFT" registers after each system reset, and the option bytes take effect. The option bytes description is shown in the ***Table 3-2. Option byte***.The option bytes are configured according to the requirements of the application.

Table 3-2. Option byte

Name	Factory value	Register map
[29]: IOSPDOPEN	0x0	FMC_OBSTAT0_EFT / FMC_OBSTAT0_MDF
[24]: DTCM1ECCEN	0x1	
[23]: DTCM0ECCEN	0x1	
[22]: ITCMECCEN	0x1	
[21]: SCR	0x0	
[18]: FWDGSPD_STDBY	0x1	
[17]: FWDGSPD_DPSLP	0x1	
[15:8]: SPC[7:0]	0xAA	
[7]: nRST_STDBY	0x1	
[6]: nRST_DPSLP	0x1	
[4]: nWDG_HW	0x1	
[3:2]: BOR_TH[1:0]	0x0	
[31]: DCRP_EREN	0x0	FMC_DCRPADDR_EFT / FMC_DCRPADDR_MDF
[26:16]: DCRP_AREA_END[10:0]	0x0	
[10:0]: DCRP_AREA_START[10:0]	0x0FF	
[31]: SCR_EREN	0x0	FMC_SCRADDR_EFT / FMC_SCRADDR_MDF
[26:16]: SCR_AREA_END[10:0]	0x000	
[10:0]: SCR_AREA_START[10:0]	0x0FF	
[21:0]: WP[21:0]	0x3FFFFFFF	FMC_WP_EFT / FMC_WP_MDF
[31:16]: BOOT_ADDR1[15:0]	0x1FF0	FMC_BTADDR_EFT / FMC_BTADDR_MDF
[15:0]: BOOT_ADDR0[15:0]	0x0800	
[31:16]: DATA[15:0]	0x0	FMC_OBSTAT1_EFT / FMC_OBSTAT1_MDF
[7:4]: DTCM_SZ_SHRRAM[3:0]	0x8	
[3:0]: ITCM_SZ_SHRRAM[3:0]	0x7	

Option bytes modify

The following steps show the erase sequence.

1. Unlock the FMC_OBCTL register if necessary.
2. Check the BUSY bit in FMC_STAT register to confirm that no Flash memory operation is in progress (BUSY equals to 0). Otherwise, wait until the operation has finished.
3. Write the desired option byte value in FMC_XXX_MDF.
4. Send the option bytes change command to the FMC by setting the OBSTART bit in FMC_OBCTL register.
5. Wait until all the operations have been finished by checking the value of the BUSY bit in FMC_STAT register.

6. Launch a system reset to start option bytes loading.
7. Read from FMC_XXX_EFT register and verify the option bytes if required.

Note: “XXX” includes OBSTAT0, DCRPADDR, SCRADDR, WP, BTADDR or OBSTAT1.

When the operation is executed successfully, the ENDF in FMC_STAT register is set, and an interrupt will be triggered by FMC if the ENDIE bit in the FMC_CTL register is set.

If OBLK bit in the FMC_OBCTL register is set, the _MDF register is forbidden to modify. When the OBSTART bit is set to 1, FMC will compare the effective value (_EFT) with a new value (_MDF) to check whether have option byte needs to be changed.

Option bytes modify rules

Some of the option bytes modification must respect specific rules. If one of the rules below is not met, OBMERR flag is set and modification operation is stopped. If all rules below are met, FMC starts to modify option byte and updates the _EFT option byte register value.

- Security protection (SPC)

If SPC is set to level high, any option byte modification operation is forbidden. Therefore, if the user application attempts to demote the SPC level, OBMERR flag is set and all programmed modification will be ignored.

- Erase/program protection (WP)

These option bytes manage erase/program protection in the FMC_WP_EFT register. If the SPC protection level is not level high, they can be modified without any restriction.

- DCRP area size (DCRP_AREA_START and DCRP_AREA_END)

The size of DCRP area can be increased without any restriction, but it must contain the original DCRP area, which means DCRP_AREA_START cannot be larger and DCRP_AREA_END cannot be smaller.

When removing the DCRP area, the DCRP_EREN bit (in the FMC_DCRPADDR_EFT or FMC_DCRPADDR_MDF register) must be set to 1, and a SPC level low to no protection demotion or a protection-removed mass erase must be performed simultaneously.

When reducing the size of DCRP area, the DCRP_EREN bit (in the FMC_DCRPADDR_EFT or FMC_DCRPADDR_MDF register) must be set to 1, and a SPC level low to no protection demotion must be performed simultaneously.

Note: When removing or reducing the size of DCRP area by SPC level low to no protection demotion, if the DCRP_EREN bits (in the FMC_DCRPADDR_EFT and FMC_DCRPADDR_MDF registers) are both 0, an option byte modification error (OBMERR) will be generated.

- DCRP_EREN

If this option bit is set, the content of the corresponding DCRP area is erased during SPC

level low to no protection demotion or a protection-removed mass erase. Otherwise will be preserved.

The DCRP_EREN bit can be set without any restriction. The DCRP_EREN bit can be reset only when the SPC level low to no protection demotion or a protection-removed mass erase is requested simultaneously. Otherwise OBMERR flag is set.

- Secure mode (SCR)

If there is no valid secure user area and no valid DCRP area, SCR option bit can be reset freely. If a valid DCRP area or a valid secure user area exist, the only way to reset SCR option bit is: to perform a SPC level low to no protection demotion when DCRP_EREN (in FMC_DCRPADDR_EFT or FMC_DCRPADDR_MDF register) is set to 1 and SCR_EREN (in FMC_SCRADDR_EFT or FMC_SCRADDR_MDF register) is set to 1. Otherwise OBMERR flag is set.

Note: It is recommended to make both SCR_AREA_START > SCR_AREA_END and DCRP_AREA_START > DCRP_AREA_END programmed when reset the SCR option bit during an SPC level low to no protection demotion.

- Secure user area size (SCR_AREA_START and SCR_AREA_END)

GD secure libraries run on user secure applications or devices can modify them without any restrictions.

For user non-secure applications, when removing the secure user area, the SCR_EREN bit (in the FMC_SCRADDR_EFT or FMC_SCRADDR_MDF register) must be set to 1, and a SPC level low to no protection demotion or a protection-removed mass erase must be performed simultaneously.

Note: When removing or reducing the size of SCR area by SPC level low to no protection demotion, if the SCR_EREN bits (in the FMC_DCRPADDR_EFT and FMC_DCRPADDR_MDF registers) are both 0, an option byte modification error (OBMERR) will be generated.

- SCR_EREN

If SCR_EREN bit is set, the content of the corresponding secure user area is erased during a SPC level low to no protection demotion or a protection-removed mass erase. Otherwise the content is preserved.

The SCR_EREN bit can be set without any restriction. The SCR_EREN bits can be reset only when the SPC level low to no protection demotion or a protection-removed mass erase is requested simultaneously. Otherwise OBMERR flag is set.

3.3.8. Sector erase/program protection

The FMC provides sector erase/program protection functions to prevent inadvertent operations on the Flash memory. The sector erase or program will not be accepted by the

FMC on protected sectors. If the sector erase or program command is sent to the FMC on a protected sector, the WPERR bit in the FMC_STAT register will then be set by the FMC. Note that the WPERR also set when sector erase while MER set or sector address not valid. The sector protection function can be individually enabled by configuring the WP[21:0] bit field to 0 in the option bytes.

Table 3-3. WP bit for sectors protected

WP bit	Sectors protected
WP[0]	Sector 0~Sector 15
WP[1]	Sector 16~Sector 31
. . .	. . .
WP[14]	Sector 224~ Sector 239
WP[15]	Sector 240~ Sector 255
WP[16]	Sector 256~Sector 383
WP[17]	Sector 384~Sector 511
. . .	. . .
WP[20]	Sector 768~ Sector 895
WP[21]	Sector 896~Sector 959

Note: For WP [x] (x=0 … 15), 1 bit corresponds to 16 sectors, ranging from sector (x * 16) to sector (x * 16 + 15). For WP [x] (x=17 … 21), 1 bit corresponds to 128 sectors, from sector (x * 128-1792) ~ sector (x * 128-1665).

Erase/program protected sectors cannot either be deleted or programmed. Therefore, if a sector is erase/program protected, mass erase cannot be performed unless a protection-removed mass erase or a SPC level low to no protection demotion is performed.

When SPC is set to level high, WP[21:0] cannot be modified, else WP[21:0] can be modified without any restrictions

Note: DCRP or secure user areas are erase/program protected.

3.3.9. Security protection

The FMC provides a security protection function to prevent illegal code/data access on the Flash memory. This function is useful for protecting the software or firmware from illegal users. Security protection is global. Not only flash memory but also other secured regions are protected. Other secured regions include backup SRAM (BKPSRAM), RTC backup registers and encrypted regions protected by real-time decryption (RTDEC).There are 3 levels for protecting.

No protection

When setting SPC[7:0] bits in FMC_OBSTAT0_EFT to 0xAA, no protection performed. The main flash and option bytes block are accessible by all operations. And access to other secured regions is also allowed.

Protection level low

When SPC_H in eFuse is 0, as long as setting SPC_L to 1 or SPC[7:0] option bits to any value except 0xAA or 0xCC, protection level low performed. The main flash can only be accessed by user code. In debug mode, boot from SRAM or boot from boot loader mode, all operations to main flash or other secured regions (e.g. backup SRAM) is forbidden. If a read operation is executed to main flash in debug mode, boot from SRAM or boot from boot loader mode, a read protection error (RPERR) with bus error will be generated. If a program/erase operation is executed to main flash in debug mode, boot from SRAM or boot from boot loader mode, the WPERR bit in FMC_STAT register will be set. At protection level low, option bytes block are accessible by all operations. If program back to no protection level by setting SPC byte to 0xAA, a erase events flash will be performed.

The SPC level low to no protection demotion will cause erase events below:

- For the main flash block sectors not belonging to DCRP / secure user area / WP, these sectors will be mass erased.
- Erase / program protection sectors will be erased.
- For DCRP area, if both DCRP_EREN bits in FMC_DCRPADDR_EFT and FMC_DCRPADDR_MDF are 0, the sectors belonging DCRP areas will not be erased. Otherwise DCRP areas will be erased (overlapped or not with secure-only area).
- For secure user area, if both SCR_EREN bits in FMC_SCRADDR_EFT and FMC_SCRADDR_MDF are 0, the sectors belonging secure-only areas will not be erased. Otherwise secure-only areas will be erased (overlapped or not with DCRP area).
- If at least one DCRP_EREN in FMC_DCRPADDR_EFT or FMC_DCRPADDR_MDF is 1, and at least one SCR_EREN in FMC_SCRADDR_EFT or FMC_SCRADDR_MDF is 1, the whole main flash block will be erased.
- The other secured regions (such as backup SRAM) are erased.

Note: the sector protections (DCRP, secure user area) are removed only if the protected sector boundaries are modified by the user application.

Protection level high

When SPC_H in the eFuse is 1 or the SPC option byte is set to 0xCC, protection level high performed. When this level is programmed, debug mode, boot from SRAM or boot from boot loader mode are disabled. The main flash block is accessible by all operations from user code. The user option bits can be read but can not be modified. And accesses to the other secured areas are also allowed. The SPC byte cannot be reprogrammed. So, if protection level high is programmed, it cannot move back to protection level low or no protection level.

The JTAG port is always disabled when level high is active. Therefore, it is impossible to debug and analyze the defective parts with level high security protection. If security protection level high is set while the debugger is still connected, apply a power on reset.

Note: (1) If SPC level setting in efuse macro is different from SPC level setting in option byte, the SPC level depend on the higher level of the two settings. And SPC[7:0] bits in FMC_OBSTAT0_EFT register reflect the effective SPC level. (2)If SPC_L bit in efuse macro is set, SPC level low to no protection demotion is forbidden. Otherwise OBMERR bit will be set in FMC_STAT register.

User can configure the SPC protection level refer to ***Table 3-4. SPC protection level configuration.***

Table 3-4. SPC protection level configuration

EFUSE_USER_CTL register		FMC_OBSTAT0_MDF register	FMC_OBSTAT0_EFT register	SPC level
SPC_H	SPC_L	SPC[7:0]	SPC[7:0]	
1	0 or 1	Any value	= 0xCC	Level high
0 or 1	0 or 1	0xCC	= 0xCC	Level high
0	1	Any value except 0xCC	= 0xFF	Level low
0	0	Any value except 0xCC or 0xAA	= SPC[7:0] value in FMC_OBSTAT0_MDF register	Level low
0	0	0xAA	= 0xAA	No protection

3.3.10. Dedicated code read protection area

In the main flash block, FMC can define executable-only areas, allowing only instruction transactions from the system, but not data access.

Note: Users need to compile their native code accordingly, using the execution-only option when apply executable-only area function.

One DCRP area can be defined by setting the DCRP_AREA_END[10:0] and DCRP_AREA_START[10:0] option bytes with a granularity of 4 Kbytes. This means that the actual DCRP area size is defined by:

- [(DCRP_AREA_END[10:0] - DCRP_AREA_START[10:0]) + 1] x 4Kbytes

As an example, to set a DCRP area on sector 0 to 15, the option bytes should be set as follows:

- DCRP_AREA_START[10:0] = 0x000,
- DCRP_AREA_END[10:0] = 0x00F,

So the DCRP size is:

- [(DCRP_AREA_END[10:0] - DCRP_AREA_START[10:0]) + 1] x 4Kbytes = 64 Kbytes.

The minimum DCRP area is 8Kbytes. The maximum DCRP area is the entire main flash block,

configured by setting the same value to the start and end addresses of the DCRP area.

When executing code in this area, the debug events will be ignored. Only CPU can access DCRP area, using only instruction fetch transactions. In all other cases, access to the DCRP area is illegal. For example, read operations will return 0 and a RPERR flag in FMC_STAT register is set, and write operations will be ignored and a WPERR in FMC_STAT register is set.

A valid DCRP area is erase-protected. Cannot erase sectors which located in this area. If a valid DCRP area is setting, mass erase cannot be performed unless erase is performed during the SPC level low to no protection demotion or protection-removed mass erase.

Only CPU can modify the DCRP area definition bits and DCRP_EREN bit. If DCRP area is valid(not empty), during SPC level low to no protection demotion, if in FMC_DCRPADDR_EFT and FMC_DCRPADDR_MDF, the DCRP_EREN bits are both set to 0, the contents of the DCRP area will not be erased, otherwise the contents will be erased.

Besides the option bytes, the DCRP area can also be configured by modifying the MCU reserved parameter in efuse macro with granularity of 32KB bytes.

If the DCRPLK bit in MCU reserved parameter in efuse macro is 1 and DCRP_AREA_END[7:0] and DCRP_AREA_START[7:0] in efuse macro is not all 0, DCRP area is defined by the DCRP_AREA_END[7:0] and DCRP_AREA_START[7:0] bits in the Efuse MCU reserved parameter. Otherwise, DCRP area is defined by the DCRP_AREA_END[10:0] and DCRP_AREA_START[10:0] bits in option bytes. For more details, please refer to ***Table 3-5. DCRP area configuration***.

Table 3-5. DCRP area configuration

DCRP area configure in Option Byte	DCRP area configure in Efuse	DCRPLK configure in Efuse	Effective DCRP area
Area1	Start and end addresses are both 0.	0	Area1(2)
	Start and end addresses are both 0.	1	Area1(2)
	Area2(1)	0	Area1(2)
	Area2(1)	1	Area2

Note: (1) The start and end addresses of Area2 are not both 0. (2) If the DCRP area is defined by Efuse, the value of DCRP_AREA_START[10:0] in the FMC_DCRPADDR_MDF and FMC_DCRPADDR_EFT registers is { DCRP_AREA_START[7:0] in Efuse, 3'b0 }, and the value of DCRP_AREA_END[10:0] is { DCRP_AREA_END[7:0] in Efuse, 3'b111 }.

If the DCRP area is decided by Efuse. The DCRP_AREA_END[10:0] bits or DCRP_AREA_START[10:0] bits in FMC_DCRPADDR_MDF register can not be modified. So the DCRP area is fixed. The protection-removed erase will not work.

Note: (1) The DCRP configuration priority of efuse is higher than the flash option byte, so in the product, if configure DCRP area by the option byte, the start and end address of the DCRP

area in efuse should be both set to 0, and the DCRPLK bit in efuse should be set to 1, otherwise there may be vulnerability in the DCRP area. (2) If the user has security considerations, please configure the DCRP area by efuse, otherwise there may be security risks.

3.3.11. Secure user area

In the main flash block, FMC can define secure user areas which can only be accessed when the CPU executes a secure application.

Secure user areas can isolate secure code from application non-secure code. Secure user areas can be used to protect a custom secure boot library, firmware update code, or a third party secure library.

One secure user area can be defined by setting the SCR_AREA_END and SCR_AREA_START option bytes with a granularity of 4 Kbytes. This means that the actual secure user area size is defined by:

- [(SCR_AREA_END[10:0] - SCR_AREA_START[10:0]) + 1] x 4Kbytes

As an example, to set a secure user area on sector 0, the option bytes should be set as follows:

- SCR_AREA_START[10:0] = 0x000,
- SCR_AREA_END[10:0] = 0x00F,

So the secure user size is:

[(SCR_AREA_END[10:0] - SCR_AREA_START[10:0]) + 1] x 4Kbytes = 64 Kbytes.

SCR_AREA_END[10:0] and SCR_AREA_START[10:0] option bytes can be modified by CPUs running secure libraries or application secure code. But for user non-secure applications, these option bytes can be modified only during SPC level low to no protection demotion or a protection-removed mass erase.

The minimum secure user area is 8Kbytes. The maximum secure user area is the entire main flash block, configured by setting the same value to the start and end addresses of the secure user area.

When executing code in this area, the debug events will be ignored. Only CPU can access it by executing GD secure library or user secure application. In all other cases, accessing the secure user area is illegal. For example, read operations will return 0 and a RSERR flag in FMC_STAT register is set, and write operations will be ignored and a WPERR in FMC_STAT register is set.

A valid secure user area is erase-protected. Cannot erase sectors located in this area.

Unless the application is executed from a valid secure user area, it is impossible to erase the sector located in the area. If a valid secure user area is defined, mass erase cannot be performed unless erase is performed during the SPC level low to no protection demotion or

protection-removed mass erase.

Only CPU can modify the secure user area definition bits and SCR_EREN bit. If secure user area is valid (not empty), during the SPC level low to no protection demotion, if the SCR_EREN bit in FMC_SCRADDR_EFT register and the SCR_EREN bit in FMC_SCRADDR_MDF register are both set to 0, the contents of the secure user area will not be erased, otherwise the contents will be erased.

Besides the option bytes, the secure user area can also be configured by modifying the User control parameter in efuse macro with granularity of 32KB bytes.

If the SCRLK bit in User control parameter in efuse macro is 1 and SCR_AREA_END[7:0] and SCR_AREA_START[7:0] in Efuse macro is not all 0, secure user area is defined by the SCR_AREA_END[7:0] and SCR_AREA_START[7:0] bits in the Efuse user control parameter. Otherwise, secure user area is defined by the SCR_AREA_END[10:0] and SCR_AREA_START[10:0] bits in option bytes. For more details, please refer to ***Table 3-6. Secure user area configuration***.

Table 3-6. Secure user area configuration

Secure user area configure in Option Byte	Secure user area configure in Efuse	SCRLK configure in Efuse	Effective Secure user area
Area1	Start and end addresses are both 0.	0	Area1(2)
	Start and end addresses are both 0.	1	Area1(2)
	Area2(1)	0	Area1(2)
	Area2(1)	1	Area2

Note: (1) The start and end addresses of Area2 are not both 0. (2) If the securie user area is defined by Efuse, the value of SCR_AREA_START[10:0] in the FMC_SCRADDR_MDF and FMC_SCRADDR_EFT registers is {SCR_AREA_START[7:0] in Efuse, 3'b0}, and the value of SCR_AREA_END[10:0] is {SCR_AREA_END[7:0] in Efuse, 3'b111}.

If the secure user area is decided by Efuse. The SCR_AREA_END[10:0] bits or SCR_AREA_START[10:0] bits in FMC_SCRADDR_MDF register can not be modified. So the Secure user area is fixed. The protection-removed erase will not work.

Note: (1) The secure configuration priority of efuse is higher than the flash option byte, so in the product, if configure the secure user area by the option byte, the start and end address of the secure user area in efuse should be both set to 0, and the SCRLK bit in efuse should be set to 1, otherwise there may be vulnerability in the secure user area. (2) If the user has security considerations, please configure the secure user area by efuse, otherwise there may be security risks.

3.3.12. Secure mode

Security should be performed for some sensitive programs to avoid potentially malware

attacks. For example, licensed firmware update software requires highly protection because it processes confidential data (such as encryption keys) that cannot get by other processes.

Secure areas with limited access is provided. In this area, secure services can be built that can be executed before any user application. These secure areas and their included software can be accessed only in secure mode. ***Figure 3-6. Memory architecture in standard mode and secure mode*** shows the details of the area.

Figure 3-6. Memory architecture in standard mode and secure mode

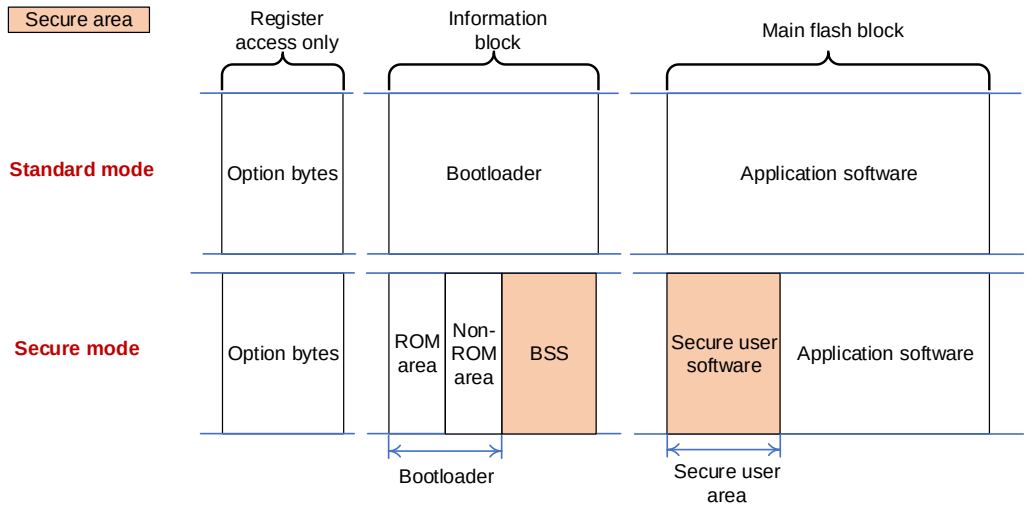

Secure user area is accessed once after reset, the area code is hidden after execution. Basic security service is Gigadevice software to configure secure services. Secure user software is located in secure user area and executed once after reset. Secure user software can be used to implement secure boot and licensed firmware update.

Secure mode and secure user area can be configured by option bytes or efuse. User can set the secure user area in the option byte by BSS to make the secure code and data be configured in the secure user area.

In secure mode, secure firmware store in information block to support boot. Secure user software is secure application code, data, or algorithms stored in main flash block.

If secure user area is not set, MCU will jump to the requested boot address which set by the BOOT_ADDR0[15:0] option bits in FMC_BTADDR_EFT register.

In secure mode, regardless of the startup configuration (BOOT pins and boot addresses), MCU will be forced to boot from secure ROM area.

Secure mode is enabled as long as one of the SCR bits in the Option byte or Efuse is set to 1. At this time, the SCR bit of the FMC_OBSTAT0_EFT register is 1. And after the SCR bit is enabled, a system reset is required to activate secure mode.

Standard mode can be returned when the SCR bit in option byte is 1 and the SCR bit in efuse is 0. To return to standard mode, the secure area and DCRP area need to be removed before or at the same time as the SCR option bit is cleared. For more details, please refer to the

modify rules of the relevant option bytes.

Note: If user has security considerations, please configure the secure mode by efuse, otherwise there may be security risks.

3.3.13. Basic security service

BSS provides the secure area setting function and secure area exiting function.

- Secure area setting function

Secure area setting function is provided by Gigadevice to perform the initialization of secure user area. In standard mode, user can directly call function (resetAndInitializeSecureAreas) to set the secure area, and other basic security services are not allowed to access.

The description of ***Table 3-7. Function resetAndInitializeSecureAreas*** is shown as below:

Table 3-7. Function resetAndInitializeSecureAreas

Function name	resetAndInitializeSecureAreas
Function prototype	void resetAndInitializeSecureAreas(BSS_secure_area_struct area);
Function descriptions	Set the range of the secure user area based on the SCR_AREA_START and SCR_AREA_END option bytes.
Precondition	-
The called functions	-
Input parameter{in}	
area	secure user area start address and end address
Output parameter{out}	
-	-
Return value	
-	-

Note: After the function is completed, a system reset is generated. This function is available only when the secure user area is first set up. User must ensure that the correct secure programs is exist in the target secure area to make it can exit to the standard programs, otherwise it will cause chip scrap.

- Secure area exiting function

Gigadevice provides a function (exitSecureArea) to exit from secure user software and jump to user application. It can close secure user area to ensure that the content in secure user area is no longer accessed.

The description of ***Table 3-8. Function exitSecureArea*** is shown as below:

Table 3-8. Function exitSecureArea

Function name	exitSecureArea
Function prototype	void exitSecureArea(unsigned int vectors, unsigned int jtagState);
Function descriptions	exit from the secure user area and jump to the user application.

Precondition	-
The called functions	-
Input parameter{in}	
vectors	address of application vector to jump after exit secure user area.
Input parameter{in}	
jtag_state	status of the JTAG after exit secure user area.
BSS_EXIT_SCR_JTAG_ENABLE	enable the JTAG after exiting
BSS_EXIT_SCR_JTAG_DISABLE	Disable the JTAG after exiting
Output parameter{out}	
-	-
Return value	
-	-

Note: After the function is completed, no system reset is generated. For security reasons, users should disable cache before calling this function in a secure user area.

3.3.14. Error description

Erase/program protection error (WPERR)

The following erase operations will be rejected and the WPERR bit in the FMC_STAT register will be set:

- Erase sectors in the valid DCRP area;
- Erase sectors in the valid secure user area (unless the application is executed from a valid secure user area);
- Erase the valid erase / program protection sectors;
- Erase the area not belong to the main flash block.

The following program operations will be ignored and the WPERR bit in the FMC_STAT register will be set:

- When SPC is protection level low, in debug mode, boot from SRAM or boot from bootloader mode, program the main flash block.
- Program sectors in the valid DCRP area unless executing GD secure library;
- Program sectors in the valid secure user area unless executing user security code or GD secure library;
- Program the valid erase/program protection sectors.
- Program the area not belong to the main flash block.

If WPERRIE bit in FMC_CTL register is set to 1, an interrupt is generated when WPERR flag is set. The software can clear it by writing 1.

Program sequence error (PGSERR)

The following operation will set the PGSERR in the FMC_STAT register, and the current program operation is aborted:

- When a program operation is requested but the program enable bit (PG) has not been set in FMC_CTL register
- When PGCHEN bit is enable but the programming area is not all 0xFF before programming.

Note: If PGCHEN is set and burst program is enable, FMC will check the flash data according to the burst size. If it is checked that the data is not all 0xFF, this beat program is failed and PGSERR is set. But other beats can be programmed normally.

If PGSERRIE bit in FMC_CTL register is set to 1, an interrupt is generated when PGSERR flag is set. The software can clear it by writing 1.

Read protection error (RPERR)

When attempt a read operation to a DCRP, a SPC protected area, FMC will set the RPERR in the FMC_STAT register, and the current read operation is aborted, but user can request a new read operation.

If RPERRIE bit in FMC_CTL register is set to 1, an interrupt is generated when RPERR flag is set. The software can clear it by writing 1.

Read secure error (RSERR)

When attempt a read operation to a secure user area, FMC will set the RSERR in the FMC_STAT register, and the current read operation is aborted.

If RSERRIE bit in FMC_CTL register is set to 1, an interrupt is generated when RSERR flag is set. The software can clear it by writing 1.

Option byte modify error (OBMERR)

When an error occurs during an option change operation, FMC will set the OBMERR flag in the FMC_STAT register, and the current operation is aborted.

If OBMERRIE bit in FMC_CTL register is set to 1, an interrupt is generated when OBMERR flag is set. The software can clear it by writing 1.

Hard fault errors

The following operation will generate a bus error:

- When SPC protection level low , in debug mode, boot from SRAM or boot from boot loader mode, access main flash block.
- Access secure user area without correct access rights.

- Access address out of range.
- Any wrong sequence to unlock the FMC_CTL or FMC_OBCTL register.

3.3.15. FMC interrupts

The FMC interrupt events and flags are listed in ***Table 3-9 FMC interrupt requests***.

Table 3-9 FMC interrupt requests

Flag	Description	Clear method	Interrupt enable bit
ENDF	End of operation	Write 1 to corresponding bit in FMC_STAT register	ENDIE
WPERR	Write protection error		WPERRIE
PGSERR	Program sequence error		PGSERRIE
RPERR	Read protection error		RPERRIE
RSERR	Read secure error		RSERRIE
OBMERR	Option bytes modify error		OBMERRIE

3.4. Register definition

FMC base address: 0x5200 2000

3.4.1. Unlock key register (FMC_KEY)

Address offset: 0x04

Reset value: 0x0000 0000

This register has to be accessed by word (32-bit).

31	30	29	28	27	26	25	24	23	22	21	20	19	18	17	16
KEY[31:16]															
w															

15	14	13	12	11	10	9	8	7	6	5	4	3	2	1	0
KEY[15:0]															
w															

Bits	Fields	Descriptions
31:0	KEY[31:0]	FMC_CTL unlock register These bits are only be written by software. Write KEY [31:0] with keys to unlock FMC_CTL register.

3.4.2. Option byte unlock key register (FMC_OBKEY)

Address offset: 0x08

Reset value: 0x0000 0000

This register has to be accessed by word (32-bit).

31	30	29	28	27	26	25	24	23	22	21	20	19	18	17	16
OBKEY[31:16]															
w															

15	14	13	12	11	10	9	8	7	6	5	4	3	2	1	0
OBKEY[15:0]															
w															

Bits	Fields	Descriptions
31:0	OBKEY[31:0]	These bits are only be written by software. Write OBKEY [31:0] with keys to unlock FMC_OBCTL register.

3.4.3. Control register (FMC_CTL)

Address offset: 0xC

Reset value: 0x0000 0001

This register has to be accessed by word (32-bit).

31	30	29	28	27	26	25	24	23	22	21	20	19	18	17	16
Reserved							RSERRIE	RPERRIE	Reserved				PGSERRIE	WPERRIE	ENDIE
							rw	rw					rw	rw	rw

15	14	13	12	11	10	9	8	7	6	5	4	3	2	1	0
Reserved								START	Reserved		PGCHEN	MER	SER	PG	LK
								rs			rw	rw	rw	rw	rs

Bits	Fields	Descriptions
31:25	Reserved	Must be kept at reset value.
24	RSERRIE	Read secure error interrupt enable. This bit is set or cleared by software only when LK is set to 0. 0: Disable read secure error interrupt 1: Enable read secure error interrupt
23	RPERRIE	Read protection error interrupt enable This bit is set or cleared by software only when LK is set to 0 0: Disable read protection error interrupt 1: Enable read protection error interrupt
22:19	Reserved	Must be kept at reset value.
18	PGSERRIE	Program sequence error interrupt enable This bit is set or cleared by software only when LK is set to 0 0: Disable program sequence error interrupt 1: Enable program sequence error interrupt
17	WPERRIE	Erase/program protection error interrupt enable This bit is set or cleared by software only when LK is set to 0. 0: Disable erase/program error interrupt 1: Enable erase/program error interrupt
16	ENDIE	End of operation interrupt enable This bit is set or cleared by software when LK is set to 0. 0: Disable end of operation interrupt 1: Enable end of operation interrupt
15:8	Reserved	Must be kept at reset value.
7	START	Send erase command to FMC This bit is set by software to send erase command to FMC when LK is set to 0. This bit is cleared by hardware when the BUSY bit is cleared.
6:5	Reserved	Must be kept at reset value.
4	PGCHEN	Check programming area enable This bit is set or cleared by software only when LK is set to 0

		0: Disable check whether the programming area is all 0xFF before programming. 1: Enable check whether the programming area is all 0xFF before programming. If this bit is set, and the programming area is not all 0xFF, PGSERR flag is set. And the program operation is invalid.
3	MER	Mass erase command bit This bit is set or cleared by software when LK is set to 0. 0: No effect 1: Main flash mass erase command If MER and SER are both set, FMC will perform a mass erase operation. Because the priority of MER is higher than SER.
2	SER	Sector erase command bit This bit is set or clear by software when LK is set to 0. 0: No effect 1: Main Flash sector erase command If MER and SER are both set, FMC will perform a mass erase operation. Because the priority of MER is higher than SER.
1	PG	Main Flash program command bit This bit is set or clear by software when LK is set to 0. 0: No effect 1: Main Flash program command
0	LK	FMC_CTL lock bit This bit is cleared by hardware when right sequence written to the FMC_KEY register. This bit can be set by software.

Note: This register should be reset after the corresponding Flash operation completed.

3.4.4. Status register (FMC_STAT)

Address offset: 0x10

Reset value: 0x0000 0000

This register has to be accessed by word (32-bit).

31	30	29	28	27	26	25	24	23	22	21	20	19	18	17	16
Reserved	OBMERR	Reserved					RSERR	RPERR	Reserved				PGSERR	WPERR	ENDF
	rc_w1						rc_w1	rc_w1					rc_w1	rc_w1	rc_w1

15	14	13	12	11	10	9	8	7	6	5	4	3	2	1	0
Reserved															BUSY
															r

Bits	Fields	Descriptions
31	Reserved	Must be kept at reset value.
30	OBMERR	Option byte modify error flag .

		This bit is set by hardware. The software can clear it by writing 1. 0: Disable option byte modify error 1: Enable option byte modify error
29:25	Reserved	Must be kept at reset value.
24	RSERR	Read secure error flag bit. When access a secure user protected address, this bit is set by hardware. The software can clear it by writing 1. 0: No read secure error occurs 1: Read secure error occurs
23	RPERR	Read protection error flag bit. When access address protected by DCRP or RDP, this bit is set by hardware. The software can clear it by writing 1. 0: No read protection error occurs 1: Read protection error occurs
22:19	Reserved	Must be kept at reset value.
18	PGSERR	Program sequence error flag bit. When a program sequence error occurs, this bit is set by hardware. The software can clear it by writing 1. 0: No program sequence error occurs 1: Program sequence error occurs
17	WPERR	Erase/program protection error flag bit. When a erase/program protection error occurs, this bit is set by hardware. The software can clear it by writing 1. 0: No write protection error occurs 1: Write protection error occurs
16	ENDF	End of operation flag bit. When the operation executed successfully, this bit is set by hardware. The software can clear it by writing 1.
15:1	Reserved	Must be kept at reset value.
0	BUSY	The Flash is busy bit When the operation is in progress, this bit is set to 1. When the operation is end or an error is generated, this bit is cleared to 0.

3.4.5. Address register (FMC_ADDR)

Address offset: 0x14
Reset value: 0x0000 0000

This register has to be accessed by word (32-bit).

31	30	29	28	27	26	25	24	23	22	21	20	19	18	17	16
ADDR[31:16]															
rw															

15	14	13	12	11	10	9	8	7	6	5	4	3	2	1	0
ADDR[15:0]															
rw															

Bits	Fields	Descriptions
31:0	ADDR[31:0]	Flash erase command address bits These bits are configured by software. ADDR bits are the address of flash to be erased.

3.4.6. Option byte control register (FMC_OBCTL)

Address offset: 0x18

Reset value: 0x0000 0001

This register has to be accessed by word (32-bit).

31	30	29	28	27	26	25	24	23	22	21	20	19	18	17	16
Reserved	OBMERRIE	Reserved													
	rw														

15	14	13	12	11	10	9	8	7	6	5	4	3	2	1	0
Reserved														OBSTART	OBLK
														rs	rs

Bits	Fields	Descriptions
31	Reserved	Must be kept at reset value.
30	OBMERRIE	Option byte modify error interrupt enable. This bit is set or cleared by software only when OBLK is set to 0. 0: Disable option byte modify error interrupt 1: Enable option byte modify error interrupt
29:2	Reserved	Must be kept at reset value.
1	OBSTART	Send option byte change command to FMC bit. This bit is set by software to send option byte change command to FMC only when OBLK is set to 0. This bit is cleared by hardware when the BUSY bit is cleared
0	OBLK	FMC_OBCTL lock bit This bit is cleared by hardware when right sequence written to FMC_OBKEY register. This bit can be set by software.

3.4.7. Option byte status register 0 (FMC_OBSTAT0_EFT)

Address offset: 0x1C

Reset value: 0xXXXX XXXX. Factory value is 0x01C6 AAD0

This register is the effective values of corresponding option bits. Load flash values after reset.

This register has to be accessed by word (32-bit).

31	30	29	28	27	26	25	24	23	22	21	20	19	18	17	16
Reserved		IOSPDOPEN	Reserved				DTCM1ECCEN	DTCM0ECCEN	ITCMECCEN	SCR	Reserved		FWDGSPD_STDBY	FWDGSPD_DPSLP	Reserved
		r					r	r	r	r			r	r	

15	14	13	12	11	10	9	8	7	6	5	4	3	2	1	0
SPC[7:0]								nRST_STDBY	nRST _DPSLP	Reserved	nWDG_HW	BOR_TH[1:0]		Reserved	
			r					r	r		r	r			

Bits	Fields	Descriptions
31:30	Reserved	Must be kept at reset value.
29	IOSPDOPEN	Allowed enable status bit for I/O speed optimization at low-voltage. 0: Chip operating voltage greater than 2.5V, so I/O speed optimization is not allowed 1: Chip operating voltage is less than 2.5V, so I/O speed optimization is allowed
28:25	Reserved	Must be kept at reset value.
24	DTCM1ECCEN	DTCM1 ECC function enable status bit 0: Disable CPU DTCM1 ECC function 1: Enable CPU DTCM1 ECC function
23	DTCM0ECCEN	DTCM0 ECC function enable status bit 0: Disable CPU DTCM0 ECC function 1: Enable CPU DTCM0 ECC function
22	ITCMECCEN	ITCM ECC function enable status bit 0: Disable CPU ITCM ECC function 1: Enable CPU ITCM ECC function
21	SCR	Secure mode status bit 0: Disable secure mode. 1: Enable secure mode.
20:19	Reserved	Must be kept at reset value.
18	FWDGSPD_STDBY	FWDGT suspend option in standby mode status bit 0: FWDGT is suspend in system standby mode 1: FWDGT is running in system standby mode.
17	FWDGSPD_DPSLP	FWDGT suspend option in deepsleep mode status bit

		0: FWDGT is suspend in system deepsleep mode 1: FWDGT is running in system deepsleep mode.
16	Reserved	Must be kept at reset value.
15:8	SPC[7:0]	Security protection level option byte status bits 0xAA: No protection 0xCC: Protection level high Any value except 0xAA or 0xCC: Protection level low.
7	nRST_STDBY	Option byte standby reset status bit 0: Generates a reset instead of entering standby mode 1: No reset when entering standby mode.
6	nRST_DPSLP	Option byte deepsleep reset status bit 0: Generates a reset instead of entering Deep-sleep mode 1: No reset when entering Deep-sleep mode
5	Reserved	Must be kept at reset value.
4	nWDG_HW	Watchdog status bit 0: Hardware free watchdog 1: Software free watchdog
3:2	BOR_TH[1:0]	BOR threshold status bits 00: No BOR function 01: BOR threshold value 1 10: BOR threshold value 2 11: BOR threshold value 3
1:0	Reserved	Must be kept at reset value.

3.4.8. Option byte status register 0 (FMC_OBSTAT0_MDF)

Address offset: 0x20

Reset value: 0xXXXX XXXX

This register is used for modifying values to corresponding option bits. Values after reset is the effective values of the corresponding option bits.

This register has to be accessed by word (32-bit).

31	30	29	28	27	26	25	24	23	22	21	20	19	18	17	16
Reserved		IOSPDOPEN	Reserved				DTCM1ECCEN	DTCM0ECCEN	ITCMECCEN	SCR	Reserved		FWDGSPD_STDBY	FWDGSPD_DPSLP	Reserved
		rw					rw	rw	rw	rw			rw	rw	

15	14	13	12	11	10	9	8	7	6	5	4	3	2	1	0
SPC[7:0]								nRST_STDBY	nRST_DPSLP	Reserved	nWDG_HW	BOR_TH[1:0]		Reserved	

rw rw rw rw rw rw

Bits	Fields	Descriptions
31:30	Reserved	Must be kept at reset value.
29	IOSPDOPEN	Allowed enable configuration bit for I/O speed optimization at low-voltage. 0: Chip operating voltage greater than 2.5V, so I/O speed optimization is not allowed 1: Chip operating voltage is less than 2.5V, so I/O speed optimization is allowed
28:25	Reserved	Must be kept at reset value.
24	DTCM1ECCEN	DTCM1 ECC function enable configuration bit 0: Disabled CPU DTCM1 ECC function 1: Enabled CPU DTCM1 ECC function
23	DTCM0ECCEN	DTCM0 ECC function enable configuration bit 0: Disabled CPU DTCM0 ECC function 1: enabled CPU DTCM0 ECC function
22	ITCMECCEN	ITCM ECC function enable configuration bit 0: disabled CPU ITCM ECC function 1: enabled CPU ITCM ECC function
21	SCR	Secure mode configuration bit 0: Disable secure mode. 1: Enable secure mode.
20:19	Reserved	Must be kept at reset value.
18	FWDGSPD_STDBY	FWDGT suspend option in standby mode configuration bit 0: FWDGT is suspend in system standby mode 1: FWDGT is running in system standby mode.
17	FWDGSPD_DPSLP	FWDGT suspend option in deepsleep mode configuration bit 0: FWDGT is suspend in system deepsleep mode 1: FWDGT is running in system deepsleep mode.
16	Reserved	Must be kept at reset value.
15:8	SPC[7:0]	Security protection level option configuration bits 0xAA: No protection 0xCC: Protection level high Any value except 0xAA or 0xCC: Protection level low.
7	nRST_STDBY	Option byte standby reset configuration bit 0: Generates a reset instead of entering standby mode 1: No reset when entering standby mode
6	nRST_DPSLP	Option byte deepsleep reset configuration bit 0: Generates a reset instead of entering deep-sleep mode

		1: No reset when entering deep-sleep mode
5	Reserved	Must be kept at reset value.
4	nWDG_HW	Watchdog configuration bit 0: Hardware free watchdog 1: Software free watchdog
3:2	BOR_TH[1:0]	BOR threshold configuration bits 00: No BOR function 01: BOR threshold value 1 10: BOR threshold value 2 11: BOR threshold value 3
1:0	Reserved	Must be kept at reset value.

3.4.9. DCRP address register (FMC_DCRPADDR_EFT)

Address offset: 0x28

Reset value: 0xXXXX 0XXX. Factory value is 0x0000 00FF

This register is the effective values of corresponding option bits. Load flash values after reset

This register has to be accessed by word (32-bit).

31	30	29	28	27	26	25	24	23	22	21	20	19	18	17	16
DCRP_EREN	Reserved				DCRP_AREA_END[10:0]										
r										r					

15	14	13	12	11	10	9	8	7	6	5	4	3	2	1	0
Reserved					DCRP_AREA_START[10:0]										
										r					

Bits	Fields	Descriptions
31	DCRP_EREN	DCRP area erase enable status bit. 0: DCRP is not erased. 1: DCRP is erased when a SPC level low to no protection demotion or a protection-removed mass erase occur.
30:27	Reserved	Must be kept at reset value.
26:16	DCRP_AREA_END[10:0]	DCRP area end address status bits These bits contain the last 4K-byte block of the DCRP area. End absolute address = (DCRP_AREA_END[10:0] + 1) * 4096 – 1 + 0x0800_0000. If DCRP_AREA_END[10:0] = DCRP_AREA_START[10:0], DCRP protects the whole main flash block. If DCRP_AREA_END[10:0] < DCRP_AREA_START[10:0], protection is invalid.

15:11	Reserved	Must be kept at reset value.
10:0	DCRP_AREA_START[10:0]	DCRP area start address status bits These bits contain the first 4K-byte block of the DCRP area. Start absolute address = DCRP_AREA_START[10:0] * 4096 + 0x0800_0000. If DCRP_AREA_END[10:0] = DCRP_AREA_START[10:0], DCRP protects the whole main flash block. If DCRP_AREA_END[10:0] < DCRP_AREA_START[10:0], protection is invalid.

3.4.10. DCRP address register (FMC_DCRPADDR_MDF)

Address offset: 0x2C
Reset value: 0xXXXX 0XXX

This register is used for modifying values to corresponding option bits. Values after reset is the effective values of the corresponding option bits.

This register has to be accessed by word (32-bit).

31	30	29	28	27	26	25	24	23	22	21	20	19	18	17	16
DCRP_EREN	Reserved				DCRP_AREA_END[10:0]										
rw					rw										

15	14	13	12	11	10	9	8	7	6	5	4	3	2	1	0
Reserved					DCRP_AREA_START[10:0]										
					rw										

Bits	Fields	Descriptions
31	DCRP_EREN	DCRP area erase enable configuration bit. 0: DCRP is not erased. 1: DCRP is erased when a SPC level low to no protection demotion or a protection-removed mass erase.
30:27	Reserved	Must be kept at reset value.
26:16	DCRP_AREA_END[10:0]	DCRP area end address configuration bits These bits contain the last 4K-byte block of the DCRP area. End absolute address = (DCRP_AREA_END[10:0] + 1) * 4096 – 1 + 0x0800_0000 If DCRP_AREA_END[10:0] = DCRP_AREA_START[10:0], DCRP protects the whole main flash block. If DCRP_AREA_END[10:0] < DCRP_AREA_START[10:0], protection is invalid.
15:11	Reserved	Must be kept at reset value.
10:0	DCRP_AREA_START[10:0]	DCRP area start address configuration bits These bits contain the first 4K-byte block of the DCRP area. Start absolute address = DCRP_AREA_START[10:0] * 4096 + 0x0800_0000. If DCRP_AREA_END[10:0] = DCRP_AREA_START[10:0], DCRP protects the

whole main flash block.

If DCRP_AREA_END[10:0] < DCRP_AREA_START[10:0], protection is invalid.

3.4.11. Secure address register (FMC_SCRADDR_EFT)

Address offset: 0x30

Reset value: 0xXXXX 0XXX. Factory value is 0x0000 00FF

This register is the effective values of corresponding option bits. Load flash values after reset

This register has to be accessed by word (32-bit).

31	30	29	28	27	26	25	24	23	22	21	20	19	18	17	16
SCR_EREN	Reserved				SCR_AREA_END[10:0]										
r										r					

15	14	13	12	11	10	9	8	7	6	5	4	3	2	1	0
Reserved					SCR_AREA_START[10:0]										
										r					

Bits	Fields	Descriptions
31	SCR_EREN	Secure user area erase enable option status bit. 0: No action 1: The secure user area is erased when a SPC level low to no protection demotion or a protection-removed mass erase.
30:27	Reserved	Must be kept at reset value.
26:16	SCR_AREA_END[10:0]	Secure user area end address status bits These bits contain the last 4K-byte block of the secure user area. End absolute address = (SCR_AREA_END[10:0] + 1) * 4096 – 1 + 0x0800_0000 If SCR_AREA_END[10:0] = SCR_AREA_START[10:0], whole main flash block is secure user area. If SCR_AREA_END[10:0] < SCR_AREA_START[10:0], protection is invalid.
15:11	Reserved	Must be kept at reset value.
10:0	SCR_AREA_START[10:0]	Secure user area start address status bits These bits contain the first 4K-byte block of the secure user area. Start absolute address = SCR_AREA_START[10:0] * 4096 + 0x0800_0000. If SCR_AREA_END[10:0] = SCR_AREA_START[10:0], whole main flash block is secure user area. If SCR_AREA_END[10:0] < SCR_AREA_START[10:0], protection is invalid.

3.4.12. Secure address register (FMC_SCRADDR_MDF)

Address offset: 0x34

Reset value: 0xXXXX 0XXX

This register is used for modifying values to corresponding option bits. Values after reset is the effective values of the corresponding option bits.

This register has to be accessed by word (32-bit).

31	30	29	28	27	26	25	24	23	22	21	20	19	18	17	16
SCR_EREN	Reserved				SCR_AREA_END[10:0]										
rw										r					

15	14	13	12	11	10	9	8	7	6	5	4	3	2	1	0
Reserved					SCR_AREA_START[10:0]										
										r					

Bits	Fields	Descriptions
31	SCR_EREN	Secure user area erase enable option configuration bit. 0: No action 1: The secure user area is erased when a SPC level low to no protection demotion or a protection-removed mass erase.
30:27	Reserved	Must be kept at reset value.
26:16	SCR_AREA_END[10:0]	Secure user area end address configuration bits These bits contain the last 4K-byte block of the secure user area. End absolute address = (SCR_AREA_END[10:0] + 1) * 4096 – 1 + 0x0800_0000 If SCR_AREA_END[10:0] = SCR_AREA_START[10:0], whole main flash block is secure user. If SCR_AREA_END[10:0] < SCR_AREA_START[10:0], protection is invalid.
15:11	Reserved	Must be kept at reset value.
10:0	SCR_AREA_START[10:0]	Secure user area start address configuration bits These bits contain the first 4K-byte block of the secure user area. Start absolute address = SCR_AREA_START[10:0] * 4096 + 0x0800_0000. If SCR_AREA_END[10:0] = SCR_AREA_START[10:0], whole main flash block is secure user. If SCR_AREA_END[10:0] < SCR_AREA_START[10:0], protection is invalid.

3.4.13. Erase/program protection register (FMC_WP_EFT)

Address offset: 0x38

Reset value: 0xXXXX XXXX .Factory value is 0x3FFF FFFF

This register is the effective values of corresponding option bits. Load flash values after reset

This register is read-only. This register has to be accessed by word (32-bit).

31	30	29	28	27	26	25	24	23	22	21	20	19	18	17	16

Reserved	WP[21:16]
	r

15	14	13	12	11	10	9	8	7	6	5	4	3	2	1	0
WP[15:0]															
r															

Bits	Fields	Descriptions
31:22	Reserved	Must be kept at reset value.
21:0	WP[21:0]	Sector erase/program protection option status bit In WP[21], each bit reflects the corresponding 64 sectors to erase/program protection status. 0: corresponding 64 sectors are erase/program protected. 1: corresponding 64 sectors are not erase/program protected. In WP[20:16], each bit reflects the corresponding 128 sectors to erase/program protection status. 0: corresponding 128 sectors are erase/program protected. 1: corresponding 128 sectors are not erase/program protected. In WP[15:0], each bit reflects the corresponding 16 sector to erase/program protection status. 0: corresponding 16 sector is erase/program protected. 1: corresponding 16 sector is not erase/program protected.

3.4.14. Erase/program protection register (FMC_WP_MDF)

Address offset: 0x3C

Reset value: 0xXXXX XXXX

This register is used for modifying values to corresponding option bits. Values after reset is the effective values of the corresponding option bits.

This register has to be accessed by word (32-bit).

31	30	29	28	27	26	25	24	23	22	21	20	19	18	17	16
Reserved										WP[21:16]					
												rw			

15	14	13	12	11	10	9	8	7	6	5	4	3	2	1	0
WP[15:0]															
rw															

Bits	Fields	Descriptions
31:22	Reserved	Must be kept at reset value.
21:0	WP	Sector erase/program protection option configuration bit In WP[21], each bit can set the corresponding 64 sectors to erase/program protection status.

0: set corresponding 64 sectors to erase/program protected.

1: set corresponding 64 sectors to not erase/program protected.

In WP[20:16], each bit can set the corresponding 128 sectors to erase/program protection status.

0: set corresponding 128 sectors to erase/program protected.

1: set corresponding 128 sectors to not erase/program protected.

In WP[15:0], each bit can set the corresponding 16 sector to erase/program protection status.

0: set corresponding 16 sector to erase/program protected.

1: set corresponding 16 sector to not erase/program protected.

3.4.15. Boot address register (FMC_BTADDR_EFT)

Address offset: 0x40

Reset value: 0xXXXX XXXX. Factory value is 0x1FF0 0800

This register is the effective values of corresponding option bits. Load flash values after reset

This register has to be accessed by word (32-bit).

31	30	29	28	27	26	25	24	23	22	21	20	19	18	17	16
BOOT_ADDR1[15:0]															
r															

15	14	13	12	11	10	9	8	7	6	5	4	3	2	1	0
BOOT_ADDR0[15:0]															
r															

Bits	Fields	Descriptions
31:16	BOOT_ADDR1[15:0]	Boot address 1 status bits MSB of the boot address if BOOT pin is high.
15:0	BOOT_ADDR0[15:0]	Boot address 0 status bits MSB of the boot address if BOOT pin is low.

3.4.16. Boot address register (FMC_BTADDR_MDF)

Address offset: 0x44

Reset value: 0xXXXX XXXX

This register is used for modifying values to corresponding option bits. Values after reset is the effective values of the corresponding option bits.

This register has to be accessed by word (32-bit).

31	30	29	28	27	26	25	24	23	22	21	20	19	18	17	16
BOOT_ADDR1[15:0]															
rw															

15	14	13	12	11	10	9	8	7	6	5	4	3	2	1	0
BOOT_ADDR0[15:0]															
rw															

Bits	Fields	Descriptions
31:16	BOOT_ADDR1[15:0]	Boot address 1 configuration bits. Configure the MSB of boot address if the BOOT pin is high.
15:0	BOOT_ADDR0[15:0]	Boot address 0 configuration bits. Configure the MSB of the boot address if the BOOT pin is low.

3.4.17. Option byte status register 1 (FMC_OBSTAT1_EFT)

Address offset: 0x50

Reset value: 0xXXXX 0XXX. Factory value is 0x0000 0087

This register is the effective values of corresponding option bits. Load flash values after reset

This register has to be accessed by word (32-bit).

31	30	29	28	27	26	25	24	23	22	21	20	19	18	17	16
DATA[15:0]															
r															

15	14	13	12	11	10	9	8	7	6	5	4	3	2	1	0
Reserved								DTCM_SZ_SHRRAM[3:0]				ITCM_SZ_SHRRAM[3:0]			
								r				r			

Bits	Fields	Descriptions
31:16	DATA[15:0]	User defined option byte data status value
15:8	Reserved	Must be kept at reset value.
7:4	DTCM_SZ_SHRRAM [3:0]	DTCM size of shared RAM status bits. DTCM + ITCM can not be more than 512Kbyte 0000: 0-byte DTCM 0001~0110: Reserved 0111: 64-Kbyte DTCM 1000: 128-Kbyte DTCM 1001: 256-Kbyte DTCM 1010: 512-Kbyte DTCM 1011~1111: Reserved
3:0	ITCM_SZ_SHRRAM[3:0]	ITCM size of shared RAM status bits. DTCM + ITCM can not be more than 512Kbyte 0000: 0-byte ITCM 0001~0110: Reserved 0111: 64-Kbyte ITCM

1000: 128-Kbyte ITCM
1001: 256-Kbyte ITCM
1010: 512-Kbyte ITCM
1011~1111: Reserved

3.4.18. Option byte status register 1 (FMC_OBSTAT1_MDF)

Address offset: 0x54
Reset value: 0xXXXX 0XXX.

This register is used for modifying values to corresponding option bits. Values after reset is the effective values of the corresponding option bits.

This register has to be accessed by word (32-bit).

31	30	29	28	27	26	25	24	23	22	21	20	19	18	17	16
DATA[15:0]															
rw															

15	14	13	12	11	10	9	8	7	6	5	4	3	2	1	0
Reserved								DTCM_SZ_SHRRAM[3:0]				ITCM_SZ_SHRRAM[3:0]			
								rw				rw			

Bits	Fields	Descriptions
31:16	DATA[15:0]	User defined option byte data configuration value
15:8	Reserved	Must be kept at reset value.
7:4	DTCM_SZ_SHRRAM [3:0]	DTCM size of shared RAM configuration bits. DTCM + ITCM can not be more than 512Kbyte 0000: 0-byte DTCM 0001~0110: Reserved 0111: 64-Kbyte DTCM 1000: 128-Kbyte DTCM 1001: 256-Kbyte DTCM 1010: 512-Kbyte DTCM 1011~1111: Reserved
3:0	ITCM_SZ_SHRRAM[3:0]	ITCM size of shared RAM configuration bits. DTCM + ITCM can not be more than 512Kbyte 0000: 0-byte ITCM 0001~0110: Reserved 0111: 64-Kbyte ITCM 1000: 128-Kbyte ITCM 1001: 256-Kbyte ITCM 1010: 512-Kbyte ITCM 1011~1111: Reserved

3.4.19. NO-RTDEC area register (FMC_NODEC)

Address offset: 0x60

Reset value: 0x0000 00FF

This register has to be accessed by word (32-bit) only when LK is set to 0.

31	30	29	28	27	26	25	24	23	22	21	20	19	18	17	16
Reserved					NODEC_AREA_END[10:0]										
										rw					

15	14	13	12	11	10	9	8	7	6	5	4	3	2	1	0
Reserved					NODEC_AREA_START[10:0]										
										rw					

Bits	Fields	Descriptions
31:27	Reserved	Must be kept at reset value.
26:16	NODEC_AREA_END [10:0]	NO-RTDEC area end address These bits contain the last 4K-byte block that reading main flash block without decryption. End absolute address= NODEC_AREA_END[10:0] * 4096 -1 + 0x0800_0000. If NODEC_AREA_END[10:0] = NODEC_AREA_START[10:0], whole main flash block is reading without decryption. If NODEC_AREA_END[10:0] < NODEC_AREA_START[10:0], whole main flash block is reading with decryption.
15:11	Reserved	Must be kept at reset value.
10:0	NODEC_AREA_START[10:0]	No-RTDEC area start address These bits contain the first 4K-byte block that reading main flash block without decryption. Start absolute address = NODEC_AREA_START[10:0] * 4096 + 0x0800_0000. If NODEC_AREA_END[10:0] = NODEC_AREA_START[10:0], whole main flash block is reading without decryption. If NODEC_AREA_END[10:0] < NODEC_AREA_START[10:0], whole main flash block is reading with decryption.

3.4.20. AES IV register (FMC_AESIVx_EFT) (x = 0…2)

Address offset: 0x68 + 0x4 * x

Reset value: 0xXXXX XXXX

This register is the effective high 96 bits of AES IV. The AES initialization vector is not an option byte, and it is stored in non-volatile AES IV area. The register value is loaded from this area after reset

This register has to be accessed by word (32-bit).

31	30	29	28	27	26	25	24	23	22	21	20	19	18	17	16
AESIV[31:16]															
r															

15	14	13	12	11	10	9	8	7	6	5	4	3	2	1	0
AESIV[15:0]															
r															

Bits	Fields	Descriptions
31:0	AESIV[31:0]	AES initialization vector status value The initialization vector AES_IV[127:0] = AESIV[95:0] || 12'b0 || ReadAddress[23:4]. The 96 bits AESIV[95:0] is formed with [AESIV2, AESIV1, AESIV0].

3.4.21. AES IV register (FMC_AESIVx_MDF) (x = 0…2)

Address offset: 0x74 + 0x4 * x

Reset value: 0x0000 0000

This register is used for modifying high 96 bits of AES IV.

This register has to be accessed by word (32-bit) only when LK is set to 0.

31	30	29	28	27	26	25	24	23	22	21	20	19	18	17	16
AESIV[31:16]															
rw															

15	14	13	12	11	10	9	8	7	6	5	4	3	2	1	0
AESIV[15:0]															
rw															

Bits	Fields	Descriptions
31:0	AESIV[31:0]	AES initialization vector configuration value The initialization vector AES_IV[127:0] = AESIV[95:0] || 12'b0 || ReadAddress[23:4]. The AESIV[95:0] is formed with [AESIV2, AESIV1,AESIV0]. After the IV is written to the FMC_AESIV2_MDF register, the values in the FMC_AESIV0/1/2_MDF registers will be updated to the AES IV area, and the BUSY bit will be automatically set to 1. When the update is complete, the BUSY bits automatically clear to 0. **Note:** Before writing to FMC_AESIV2_MDF, user ensure that no program, erase, or option byte modification operations are inprogress. Otherwise, the FMC_AESIV2_MDF register cannot be written, and the update operation will not proceed.

3.4.22. Product ID register x (FMC_PIDx) (x = 0,1)

Address offset: 0x100 + 0x4 * x

Reset value: 0xXXXX XXXX

This register has to be accessed by word (32-bit).

31	30	29	28	27	26	25	24	23	22	21	20	19	18	17	16
PID[31:16]															
r															

15	14	13	12	11	10	9	8	7	6	5	4	3	2	1	0
PID[15:0]															
r															

Bits	Fields	Descriptions
31:0	PID[31:0]	Product reserved ID code register x These bits are read only by software. These bits are unchanged constant after power on. These bits are one time program when the chip produced.

4. Electronic fuse (EFUSE)

4.1. Overview

The efuse controller has efuse macro that store system parameters. As a non-volatile unit of storage, the bit of efuse macro cannot be restored to 0 once it is programmed to 1.

4.2. Characteristics

- One-time programmable nonvolatile efuse storage cells organized as 32*32 bits.
- Double-bit redundant backup mechanism.
- All bits in the efuse cannot be rollback from 1 to 0.
- Can only be accessed through corresponding register.
- Each bit in efuse macro can only be programmed once, and software must avoid reprogramming.
- Voltage range for program: 1.71~1.98 V.
- Voltage range for read: 0.72~1.05 V

4.3. Function overview

4.3.1. Block diagram

Efuse controller implements the efuse macro read-program control logic. The efuse macro contains a storage unit of 1K bits cells.

Figure 4-1. Block diagram of efuse controller

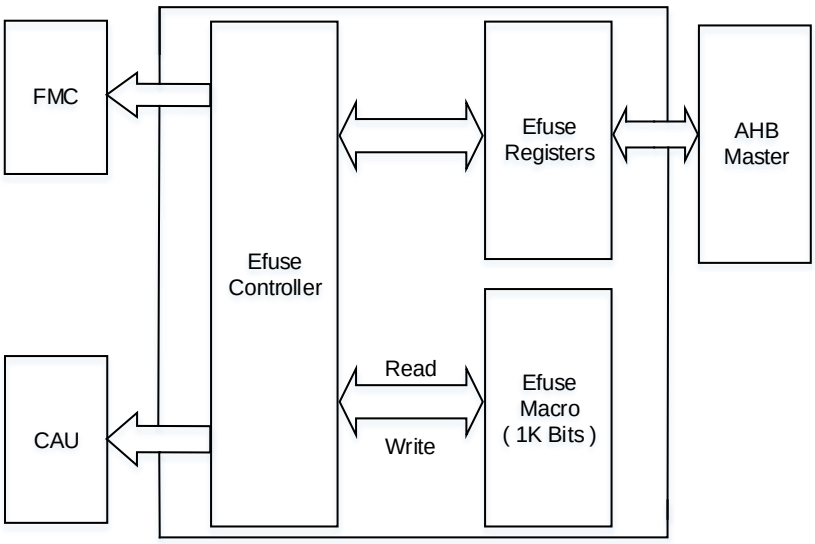

Efuse adopts the double-bit redundant backup mechanism. The first 512 bits data and the last 512 bits data are backed up with each other to effectively ensure the correctness of the data.When programming the Nth bit of the efuse, the efuse controller will program both the Nth and (N+512)th bit. When reading the Nth bit of efuse, the fuse controller will read both the Nth and (N+512)th bit, and perform ORed operation on the read results of 2 bits, and finally return the operation result to the corresponding parameter register. All the above processes are internally processed by the chip. The user only needs to access the first 512 bits, and the last 512 bits of data cannot be accessed by the user.

4.3.2. Efuse macro description

The efuse macro stores 5 system parameters, every system parameters have different width. Each system parameter in efuse has its own read and program protection attributes.

Program protection attribute is list below:

- User control parameter:
  The parameter stored in efuse macro can be modified multiple times, but once the bit has been programmed to 1, hardware will prohibit the bit being programmed again. Only when SCRLK bit is 0, high 16 bits of the register can be modified by user, and only when UCLK bit is 0, low 16 bits of the register can be modified by user. But the modified value of register will not be stored in efuse macro, unless a efuse ***Program operation*** is executed successfully. After the efuse program operation, user need a power reset (for JTAGNSW and NDBG[1:0]) or a system reset (bits except JTAGNSW and NDBG[1:0]) to load the parameter from efuse macro into the register but this newly modified parameter takes effect only after the power reset (for JTAGNSW and NDBG[1:0]) or a system reset (bits except JTAGNSW and NDBG[1:0]).

- MCU reserved parameter:
  The parameter stored in efuse macro can be modified multiple times, but once the bit has been programmed to 1, software must prohibit the bit being programmed again in user application (by setting the already programmed bit in register to 0 when efuse program operation). The register can be modified by user, but the modified value of register will not be stored in efuse macro, unless a efuse ***Program operation*** is executed successfully. After the efuse program operation, user need a system reset or a efuse ***Read operation*** to load the parameter from efuse macro into the register, but the DCRP_AREA_END[7:0]、DCRP_AREA_START[7:0]、DCRPLK、AESNCAU bits takes effect only after the system is reset.

- Debug password parameter:
  The parameter stored in efuse macro can be modified multiple times, but once the bit has been programmed to 1, software must prohibit the bit being programmed again in user application (by setting the already programmed bit in register to 0 when efuse program operation). Only when DPLK bit is 0 the register can be modified by user, but the modified value of register will not be stored in efuse macro, unless a efuse ***Program operation*** is executed successfully. After the efuse program operation, user need a

system reset or a efuse ***Read operation*** to load the parameter from efuse macro into the register and this newly modified Debug password parameter takes effect only after the system is reset.

- AES key parameter:
  The parameter stored in efuse macro can be modified multiple times, but once the bit has been programmed to 1, software must prohibit the bit being programmed again in user application (by setting the already programmed bit in register to 0 when efuse program operation). And only when AESEN bit is 0, the register can be modified by user, but the modified value of register will not be stored in efuse macro, unless a efuse ***Program operation*** is executed successfully. After the efuse program operation, user need a system reset becuse this newly modified parameter takes effect only after the system is reset.

- User data parameter:
  The parameter stored in efuse macro can be modified multiple times, but once the bit has been programmed to 1, software must prohibit the bit being programmed again in user application (by setting the already programmed bit in register to 0 when efuse program operation). And only when UDLK bit is 0, the register can be modified by user, but the modified value of register will not be stored in efuse macro, unless a efuse ***Program operation*** is executed successfully. After the efuse program operation, user need a system reset or a efuse ***Read operation*** to load the parameter from efuse macro into the register.

Read protection attribute is list below:

- User control parameter:
  The register can be read without restriction. After system reset, except JTAGNSW, NDBG[1:0] bits, all other bits in EFUSE_USER_CTL register will be restored to the value of parameter which is read out from efuse. After power reset, JTAGNSW, NDBG[1:0] will be restored to the value of parameter which is read out from efuse.

- MCU reserved parameter:
  The register can be read. After system reset, the register will be restored to the value of parameter which is read out from efuse. User can also read out the data from efuse macro by configuring the control register to perform the ***Read operation***.

- Debug password parameter:
  When the DPLK bit is 1, the JTAGNSW bit is 1, and the NDBG[1:0] bits are 2b'01 or 2b'11, the register can not be read. Otherwise this register can be read. After system reset, the register will be restored to the value of parameter which is read out from efuse. User can also read out the data from efuse macro by configuring the control register to perform the ***Read operation***.

- AES key parameter:
  The register can not be read. But user can verify the correctness of the written AES key by ***Program operation***.

Note: User must continuously write the complete 16 bytes AES key into the EFUSE_AES_KEYx register to ensure that the CRC function can check the contents of all AES key.

- User data parameter

  The register can be read without restriction. After system reset, the register will be restored to the value of parameter which is read out from efuse. User can also read out the data from efuse macro by configuring the control register to perform the ***Read operation***.

The following table ***Table 4-1. System parameters*** shows the details of each efuse byte.

Table 4-1. System parameters

Parameter	Width/ bytes	Start address	Program-protected	Read-protected	Description
User control	4B	10'd0	The parameter in efuse macro can write multiple times, but cannot rollback. Hardware will prohibit the programmed bits being reprogrammed.	After system reset, corresponding bits in EFUSE_USER_CTL register will be restored to the value of parameter which is read out from efuse.	All other bits except JTAGNSW bit and NDBG[1:0] bits in ***User control register (EFUSE_USER_CTL)***.
				After power reset, corresponding bits in EFUSE_USER_CTL register will be restored to the value of parameter which is read out from efuse.	JTAGNSW bit and NDBG[1:0] bits in ***User control register (EFUSE_USER_CTL)***.
MCU reserved	4B	10'd32	The parameter in efuse macro can write multiple times, but cannot rollback. Software must prohibit the programmed bits being reprogrammed.	After system reset, the register will be restored to the value of parameter which is read out from efuse. And user can also read out the data from efuse macro by configuring the control register to perform the read operation.	MCU reserved parameter. For more details, refer to ***MCU reserved register (EFUSE_MCU_RSV)***.
Debug password	8B	10’d64			When JTAGNSW=1, and NDBG[1:0] = 2b'01 or 2b'11, this parameter is used as the debug password for debug services. Otherwise, this parameter will be used as user data. For more details, refer to ***Debug password register x (EFUSE_DPx) (x =*** 0,1)
AES key	16B	10'd128		The parameter cannot be read out by user. But user can verify the	The AES key used to encrypt the firmware image. For more details, refer to

Parameter	Width/ bytes	Start address	Program-protected	Read-protected	Description
				correctness of the written AES key by AES key CRC function.	***Firmware AES key register x (EFUSE_AES_KEYx) (x =*** 0...3).
User data	16B	10'd256		After system reset, the register will be restored to the value of parameter which is read out from efuse The parameter stored in efuse can also be load into register by configuring the control register to perform the read operation.	User defined data. For more details, refer to ***User data register x (EFUSE_USER_DATAx) (x =*** 0...3).

Note: All parameters are custom parameters. The bits 10'd384~10'd511 of the fuse are used by the system and are not accessible by the user.

EFADDR[9:0] should be configured as the start address of the system parameter, and EFSIZE[4:0] should be configured as the width of the system parameter.

Read operation: One system parameter can be read at a time. It is forbidden to read multiple system parameters at the same time, otherwise an illegal access error will occur. However, if user only read a part of a system parameter, that is, a system parameter is not completely read, an illegal access error will not occur, but it may cause the readout data of the system parameter ar incorrect. Users should avoid this situation.

Program operation: The range of program operation cannot exceed the address range of a single system parameter, and multiple system parameters cannot be written at the same time, otherwise an illegal access error will occur.

4.3.3. Read operation

The value of the efuse can only be accessed through the corresponding register.

The following steps show the register access sequence of the efuse reading operation.

1. Clear the RDIF bit if it is set, and make sure there are no illegal access errors.
2. Reset the EFRW bit in EFUSE_CTL.
3. Write the desired efuse address and size to the EFUSE_ADDR register.
4. Set the EFSTR bit in EFUSE_CTL register.
5. Wait until the reading operations have been finished by checking the RDIF bit in EFUSE_STAT register.
6. Read the register value corresponding to the efuse.

When the read operation is executed successfully, the RDIF in EFUSE_STAT register is set, and an interrupt will be triggered if the RDIE bit in the EFUSE_CTL register is set.

Note: Efuse is very sensitive to current surges which will affect the result of read operation. It is strictly prohibited to perform read operation during the sequence of power-up or power-down, otherwise it will cause unpredictable consequences.

4.3.4. Program operation

The value of the efuse can only be modified through the corresponding register.

The following steps show the register access sequence of the efuse writing operation.

1. Clear the PGIF bit if it is set, and make sure there are no illegal access errors.
2. Set the EFRW bit in EFUSE_CTL.
3. Write the desired efuse address and size to the EFUSE_ADDR register.
4. Write the data to the corresponding register.
5. Set the EFSTR bit EFUSE_CTL register.
6. Wait until the writing operations have been finished by checking the PGIF bit in EFUSE_STAT register.

Note: If the data in the corresponding parameter register is all 0, after EFSTR is set to 1, the efuse macro will not be programmed, and PGIF will be automatically set to 1.

When the program operation is executed successfully, the PGIF in EFUSE_CTL register is set, and an interrupt will be triggered by efuse if the PGIE bit in the EFUSE_CTL register is set. It should be noted that the address and size of the written data must match the corresponding fuse register. If not match, IAERRIF bit in the EFUSE_STAT register will be set, and an interrupt will be triggered by efuse if the IAERRIE bit is set.

Note: Efuse is very sensitive to current surges which will affect the result of program operation. It is strictly prohibited to perform program operation during the sequence of power-up or power-down, otherwise it will cause unpredictable consequences.

4.3.5. AES key CRC function

The standard CRC-8-CCITT algorithm is used in CRC calculation. The CRC algorithm in this module is used to verify the values in the EFUSE_AES_KEYx registers or the AES key value stored in the efuse macro.

After continuously write 16 bytes AES key to the EFUSE_AES_KEYx registers whose offset address are 0x24, 0x28, 0x2C and 0x30, the hardware CRC module will automatically calculate the corresponding CRC checking code based on the AES key value in the EFUSE_AES_KEYx registers and store the calculation result to the AES_KEY_CRC bit field in the EFUSE_CTL register. At this time, user can compare the CRC checking code calculated by hardware with the software CRC checking code calculated by the user software. If the checking codes calculated by the software and hardware are the same, it indicates the 16 bytes AES key written to the EFUSE_AES_KEYx register is correct, otherwise the AES key written to the register is wrong.

When the AES key stored in efuse macro is read out after system reset, the hardware CRC module will automatically calculate the corresponding AES key CRC checking code based on the AES key value stored in efuse macro and store the calculation result to the AES_KEY_CRC bit field in the EFUSE_CTL register. At this time, user can compare the CRC checking code calculated by hardware with the software CRC checking code calculated by the user software. If the checking codes calculated by the software and hardware are the same, It indicates that the 16 bytes AES key that the user expects to write has been successfully and correctly written into efuse macro, otherwise the key written into efuse is wrong.

Note: CRC calculation result is generated after writing the EFUSE_AES_KEY3 register (offset address 0x30) or after the completion of the system reset read efuse.

4.3.6. EFUSE interrupts

The following operations will set the IAERRIF in the EFUSE_STAT register:

- The address is overstep boundry when reading and writing parameters in the efuse;
- When UCLK bit is set and effective, write the lower 16 bits of the EFUSE_USER_CTL;
- When SCRLK bit is set and effective, write the high 16 bits of the EFUSE_USER_CTL;
- When MCURSVLK bit is set and effective, write the lower 16 bits of the EFUSE_MCU_RSV;
- When DCRPLK bit is set and effective, write the high 16 bits of the EFUSE_MCU_RSV;
- When DPLK bit is set and effective, write the EFUSE_DPx;
- When DPLK bit is 1, JTAGNSW bit is 1, and NDBG[1:0] bits are 2b'01 or 2b'11, read the EFUSE_DPx;
- When AESEN bit is set and effective, write the EFUSE_AES_KEYx;
- When UDLK bit is set and effective, write the EFUSE_USER_DATAx;
- Read the User control parameter in efuse macro by the efuse read operation;
- Read the AES key parameter in efuse macro by the efuse read operation;

The efuse interrupt events and flags are listed in ***Table 4-2. EFUSE interrupt requests***.

Table 4-2. EFUSE interrupt requests

Interrupt event	Event flag	Enable Control bit
Program voltage setting error interrupt	PVIF	PVIE
Program complete interrupt	PGIF	PGIE
Read complete interrupt	RDIF	RDIE
Illegal access error interrupt	IAERRIF	IAERRIE

All of the interrupt events are ORed together before being sent to the interrupt controller, so the efuse can only generate a single interrupt request to the controller at any given time. Software can service multiple interrupt events in a single interrupt service routine

Figure 4-2 EFUSE interrupt mapping diagram

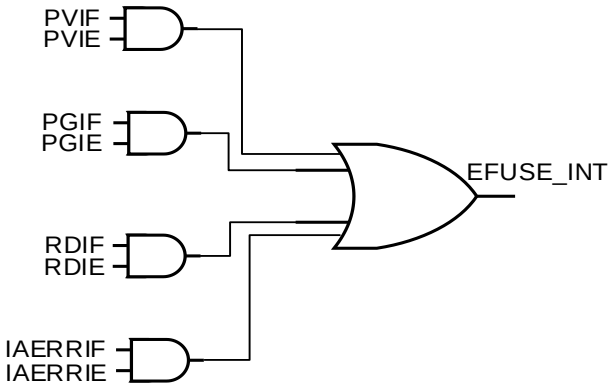
PVIF
PVIE
PGIF
PGIE
RDIF
RDIE
IAERRIF
IAERRIE
EFUSE_INT

4.4. Register definition

EFUSE base address: 0x4002 2800

4.4.1. Control register (EFUSE_CTL)

Address offset: 0x00

Reset value: 0x7E00 0000

This register has to be accessed by word (32-bit).

31	30	29	28	27	26	25	24	23	22	21	20	19	18	17	16
AES_KEY_CRC								Reserved				PVIE	RDIE	PGIE	IAERRIE
r												rw	rw	rw	rw

15	14	13	12	11	10	9	8	7	6	5	4	3	2	1	0
MPVEN	Reserved													EFRW	EFSTR
rw														rw	rw

Bits	Fields	Descriptions
31:24	AES_KEY_CRC	8-bits CRC calculation result value of AES key bits This bit filed is used to verify the value of the EFUSE_AES_KEYx register and the AES key value stored in the efuse macro. The standard CRC-8-CCITT algorithm is used in CRC calculation. If AESEN is 0, there are two situations that will calculate the CRC value of AES key and store the CRC calculation result into this bit field: (1) Continuously write 16 bytes AES key to the EFUSE_AES_KEYx registers whose offset address are 0x24, 0x28, 0x2C and 0x30. CRC calculation result is generated after writing the EFUSE_AES_KEY3 register (offset address 0x30). (2) After system reset, all the AES key value is read out automatically from efuse macro by MCU. CRC calculation result is generated after the completion of the system reset read efuse.
23:20	Reserved	Must be kept at reset value.
19	PVIE	Program voltage setting error interrupt enable 0: Disable program voltage setting error interrupt 1: Enable program voltage setting error interrupt
18	RDIE	Read completed interrupt enable 0: Disable read completed interrupt 1: Enable read completed interrupt
17	PGIE	Program completed interrupt enable 0: Disable program completed interrupt 1: Enable program completed interrupt
16	IAERRIE	Illegal access error interrupt enable

		0: Disable the illegal access error interrupt 1: Enable the illegal access error interrupt This bit cannot be modified when the EFSTR bit in EFUSE_CTL register is 1
15	MPVEN	Monitor program voltage function enable 0: Disable monitor program voltage function 1: Enable monitor program voltage function These bits cannot be modified when the EFSTR bit in EFUSE_CTL register is 1.
14:2	Reserved	Must be kept at reset value.
1	EFRW	The selection of efuse operation 0: Read efuse 1: Write efuse This bit cannot be modified when the EFSTR bit in EFUSE_CTL register is 1
0	EFSTR	Start efuse operation This bit is set by software and cleared by hardware 0: No effect 1: Start read or write efuse operation

4.4.2. Address register (EFUSE_ADDR)

Address offset: 0x04

Reset value: 0x0000 0000

This register has to be accessed by word (32-bit).

31	30	29	28	27	26	25	24	23	22	21	20	19	18	17	16
Reserved															

15	14	13	12	11	10	9	8	7	6	5	4	3	2	1	0
Reserved	EFSIZE[4:0]					EFADDR[9:0]									
	rw					rw									

Bits	Fields	Descriptions
31:15	Reserved	Must be kept at reset value.
14:10	EFSIZE[4:0]	Read or write efuse data size The size is calculated by byte. These bits cannot be modified when the EFSTR bit in EFUSE_CTL register is 1.
9:0	EFADDR[9:0]	Read or write efuse data start address EFADDR[9] must be set to 0, because the user cannot access data with an address greater than 512 bits, otherwise IAERRIF bit in EFUSE_STAT register is set. These bits cannot be modified when the EFSTR bit in EFUSE_CTL register is 1.

4.4.3. Status register (EFUSE_STAT)

Address offset: 0x0C

Reset value: 0x0000 0000

This register has to be accessed by word (32-bit).

31	30	29	28	27	26	25	24	23	22	21	20	19	18	17	16
Reserved															

15	14	13	12	11	10	9	8	7	6	5	4	3	2	1	0
Reserved											LDO_RDY	PVIF	RDIF	PGIF	IAERRIF
											r	r	r	r	r

Bits	Fields	Descriptions
31:5	Reserved	Must be kept at reset value.
4	LDO_RDY	Efuse LDO ready signal 0: LDO is not ready 1: LDO is ready **Note:** The signal is valid for whether the LDO bypass mode is enabled. This bit is automatically set by hardware before programming and automatically cleared by hardware after programming.
3	PVIF	Program voltage setting error flag 0: Program voltage is in correct range 1: Program voltage is not in correct range
2	RDIF	Read completed flag 0: Read not completed 1: Read completed
1	PGIF	Program completed flag 0: Program not completed 1: Program completed
0	IAERRIF	Illegal access error flag 0: No illegal access error occurred 1: Illegal access error has occurred

4.4.4. Status flag clear register (EFUSE_STATC)

Address offset: 0x10

Reset value: 0x0000 0000

This register has to be accessed by word (32-bit).

31	30	29	28	27	26	25	24	23	22	21	20	19	18	17	16

Reserved

15	14	13	12	11	10	9	8	7	6	5	4	3	2	1	0
Reserved												PVIC	RDIC	PGIC	IAERRIC
												rc_w1	rc_w1	rc_w1	rc_w1

Bits	Fields	Descriptions
31:4	Reserved	Must be kept at reset value.
3	PVIC	Clear bit for program voltage setting error interrupt flag 0: No effect 1: Clear error flag
2	RDIC	Clear bit for read completed interrupt flag 0: No effect 1: Clear error flag
1	PGIC	Clear bit for program completed interrupt flag 0: No effect 1: Clear error flag
0	IAERRIC	Clear bit for illegal access error interrupt flag 0: No effect 1: Clear error flag

4.4.5. User control register (EFUSE_USER_CTL)

Address offset: 0x14

Reset value: 0xXXXX XXXX. Load efuse macro values after reset.

This register can be read out without restriction. The high 16 bits of this register can be written by user only when SCRLK bit is 0. The low 16 bits of this register can be written by user only when UCLK bit is 0. But the modified value of all bits in this register will not be stored in efuse macro, unless a efuse program operation are executed successfully.

This register has to be accessed by word (32-bit).

31	30	29	28	27	26	25	24	23	22	21	20	19	18	17	16
SCR_AREA_END[7:0]								SCR_AREA_START[7:0]							
rw								rw							

15	14	13	12	11	10	9	8	7	6	5	4	3	2	1	0
Reserved		SCR	SPC_H	SPC_L	JTAGNSW	NDBG		Reserved			UDLK	AESEN	UCLK	SCRLK	DPLK
		rw	rw	rw	rw	rw					rw	rw	rw	rw	rw

Bits	Fields	Descriptions

31:24	SCR_AREA_END[7:0]	Secure user area end address bits The factory value of these bits are 0. These bits contain the last 32K-byte block of the secure user area. The secure user area can be defined by efuse with a granularity of 32 Kbytes. End absolute address = (SCR_AREA_END[7:0] + 1) * 32768 - 1 + 0x0800_0000. If SCR_AREA_END[7:0] = SCR_AREA_START[7:0] = 0 , the secure user area is undefined. If SCR_AREA_END[7:0] = SCR_AREA_START[7:0] > 0 , whole main flash block is secure user. If SCR_AREA_END[7:0] < SCR_AREA_START[7:0], secure user area is invalid. Refer to ***Table 3-6. Secure user area configuration*** for more details.
23:16	SCR_AREA_START[7:0]	Secure user area start address bits The factory value of these bits are 0. These bits contain the first 32K-byte block of the secure user area. The secure user area can be defined by efuse with a granularity of 32 Kbytes. Start absolute address = SCR_AREA_START[7:0] * 32768 + 0x0800_0000. If SCR_AREA_END[7:0] = SCR_AREA_START[7:0] = 0 , the secure user area is undefined. If SCR_AREA_END[7:0] = SCR_AREA_START[7:0] > 0, whole main flash block is secure user. If SCR_AREA_END[7:0] < SCR_AREA_START[7:0], secure user area is invalid. Refer to ***Table 3-6. Secure user area configuration*** for more details.
15:14	Reserved	Must be kept at reset value.
13	SCR	Secure mode enable The factory value of this bit is 0. 0: Disable secure mode. 1: Enable secure mode. **Note:** As long as this bit or SCR bit in FMC_OBSTAT0_EFT register is 1, the secure mode is enable.
12	SPC_H	Configure security protection to level high The factory value of this bit is 0. **Note:** If SPC_H and SPC_L in efuse macro are both 1, SPC is level high. Refer to ***Table 3-4. SPC protection level configuration*** for more details.
11	SPC_L	Configure security protection to level low The factory value of this bit is 0. **Note:** If SPC_L in efuse macro is 1, SPC level low to no protection demotion is forbidden. If SPC_H and SPC_L in efuse macro are both set, SPC is level high. Refer to ***Table 3-4. SPC protection level configuration*** for more details.
10	JTAGNSW	SW or JTAG debugger select The factory value of this bit is 0. 0: SW

		1: JTAG **Note:** When NDBG[1:0] is selected as no debug function, JTAGNSW bit is invalid and debug function is closed.
9:8	NDBG[1:0]	Debugging permission setting The factory value of these bits are 0. 00: Normal JTAG (only valid when JTAGNSW bit is 1, otherwise SW debugger is selected) 01: Secure JTAG (only valid when JTAGNSW bit is 1, otherwise SW debugger is selected) 10~11: No debug (debug function is closed regardless of the JTAGNSW bit)
7:5	Reserved	Must be kept at reset value.
4	UDLK	EFUSE_USER_DATAx register lock bit The factory value of this bit is 0. 0: Unlock EFUSE_USER_DATAx register, the register can be modified. 1: Lock EFUSE_USER_DATAx register, the register can not be modified.
3	AESEN	Lock EFUSE_AES_KEYx register and enable AES decrypt function The factory value of this bit is 0. 0: Disable AES decrypt and AES key can be written 1: Enable AES decrypt and AES key can’t be written
2	UCLK	Low 16 bits of EFUSE_USER_CTL register lock bit The factory value of this bit is 0. 0: Unlock the low 16 bits of EFUSE_USER_CTL register, the bits can be modified 1: Lock the low 16 bits of EFUSE_USER_CTL register, the bits can not be modified If the UCLK bit is 1, other lock bits in EFUSE_USER_CTL register cannot be modified, so user should be careful when set UCLK bit. **Note:** When UCLK bit is “1”, if user want to modify the high 16 bits of the User control parameter in efuse macro, the start address must be set to 10'd16 (EFSIZE[4:0] = 1 or 2) or 10'd24 (EFSIZE[4:0] = 1). Otherwise, IAERRIF flag will be set.
1	SCRLK	Secure userarea address lock bit The factory value of this bit is 0. 0: Unlock the high 16 bits in EFUSE_USER_CTL register, the bits can be modified. 1: Lock the high 16 bits in EFUSE_USER_CTL register, the bits can not be modified. **Note:** When SCRLK bit is “1”, if user want to modify the lower 16 bits of the User control parameter in efuse macro, the start address must be set to 10'd0 (EFSIZE[4:0] = 1 or 2) or 10'd8 (EFSIZE[4:0] = 1). Otherwise, IAERRIF flag will be set.
0	DPLK	EFUSE_DPx register lock bit The factory value of this bit is 0. 0: Unlock EFUSE_DPx register, the register can be written or read.

1: Lock EFUSE_DPx register, the register can not be written. When this bit is 1, the JTAGNSW bit is 1, and the NDBG[1:0] bits are 2b'01 or 2b'11, the register can not be read. Otherwise this register can be read.

4.4.6. MCU reserved register (EFUSE_MCU_RSV)

Address offset: 0x18

Reset value: 0xXXXX XXXX. Load efuse macro values after reset.

The register can be read out without restriction. The high 16 bits of this register can be written by user only when DCRPLK bit is 0. The low 16 bits of this register can be written by user only when MCURSVLK bit is 0. But the modified value of all bits in this register will not be stored in efuse macro, unless a efuse program operation are executed successfully.

This register has to be accessed by word (32-bit).

31	30	29	28	27	26	25	24	23	22	21	20	19	18	17	16
DCRP_AREA_END[7:0]								DCRP_AREA_START[7:0]							
rw								rw							

15	14	13	12	11	10	9	8	7	6	5	4	3	2	1	0
MCU_RSV[5:0]						DCRPLK	MCURSVLK	VFIMG	DISLFI	保留					AESNCAU
rw						rw	rw	rw	rw						rw

Bits	Fields	Descriptions
31:24	DCRP_AREA_END[7:0]	DCRP area end address bits The factory value of these bits are 0. These bits contain the last 32K-byte block of the DCRP area. The DCRP area can be defined by efuse with a granularity of 32 Kbytes. End absolute address = (DCRP_AREA_END[7:0] + 1) * 32768 - 1 + 0x0800_0000. If DCRP_AREA_END[7:0] = DCRP_AREA_START[7:0] = 0, DCRP area is undefined. If DCRP_AREA_END[7:0] = DCRP_AREA_START[7:0] > 0, whole main flash block is DCRP area. If DCRP_AREA_END[7:0] < DCRP_AREA_START[7:0], DCRP area is invalid. Refer to ***Table 3-5. DCRP area configuration*** for more details.
23:16	DCRP_AREA_START[7:0]	DCRP area start address bits The factory value of these bits are 0. These bits contain the first 32K-byte block of the DCRP area. The DCRP area can be defined by efuse with a granularity of 32 Kbytes. Start absolute address = DCRP_AREA_START[7:0] * 32768 + 0x0800_0000. If DCRP_AREA_END[7:0] = DCRP_AREA_START[7:0] = 0, DCRP area is undefined. If DCRP_AREA_END[7:0] = DCRP_AREA_START[7:0] > 0, whole main flash block is DCRP area. If DCRP_AREA_END[7:0] < DCRP_AREA_START[7:0], DCRP area is invalid.

		Refer to ***Table 3-5. DCRP area configuration*** for more details.
15:10	MCU_RSV[5:0]	MCU reserved data
9	DCRPLK	DCRP area address lock bit The factory value of this bit is 0. 0: Unlock the high 16 bits in EFUSE_MCU_RSV register, the bits can be modified. 1: Lock the high 16 bits in EFUSE_MCU_RSV register, the bits can not be modified. **Note:** When DCRPLK bit is “1”, if user want to modify the lower 16 bits of the MCU reserved parameter in efuse macro, the start address must be set to 10'd32 (EFSIZE[4:0] = 1 or 2) or 10'd40 (EFSIZE[4:0] = 1). Otherwise, IAERRIF flag will be set.
8	MCURSVLK	Low 16 bits of EFUSE_MCU_RSV register lock bit The factory value of this bit is 0. 0: Unlock the low 16 bits of EFUSE_MCU_RSV register, the bits can be modified 1: Lock the low 16 bits of EFUSE_MCU_RSV register, the bits can not be modified If the MCURSVLK bit is 1, other lock bits in EFUSE_MCU_RSV register cannot be modified, so user should be careful when set MCURSVLK bit. **Note:** When the MCURSVLK bit is “1”, If user want to modify the high 16 bits of the MCU reserved parameter in efuse macro, the start address must be set to 10'd48 (EFSIZE[4:0] = 1 or 2) or 10'd56 (EFSIZE[4:0] = 1). Otherwise, IAERRIF flag will be set.
7	VFIMG	Firmware image verification enable bit The factory value of this bit is 0. 0: Disable firmware image verification 1: Enable firmware image verification
6	DISLFI	Licensed firmware install (LFI) disable The factory value of this bit is 0. 0: Enable licensed firmware install 1: Disable licensed firmware install
5:1	Reserved	Must be kept at reset value.
0	AESNCAU	AES key for cau configuration bit The factory value of this bit is 0. 0: The AES key can be used for CAU 1: The AES key cannot be used for CAU

4.4.7. Debug password register x (EFUSE_DPx) (x = 0,1)

Address offset: 0x1C + 0x4 * x

Reset value: 0xXXXX XXXX. Load efuse macro values after reset.

When JTAGNSW = 1, and NDBG[1:0] = 2b'01 or 2b'11, this parameter is used as the debug password for debug services. Otherwise, this parameter will be used as user data.

Used as debug password: this register can be read out only when DPLK is 0. The register can be written only when DPLK bit is 0. But the modified value of register will not be stored in efuse macro, unless a efuse program operation are executed successfully.

Used as user data: the register can be read regardless of DPLK bit value. The register can be written only when DPLK bit is 0. But the modified value of register will not be stored in efuse macro, unless a efuse program operation are executed successfully.

This register has to be accessed by word (32-bit)

31	30	29	28	27	26	25	24	23	22	21	20	19	18	17	16
DP[31:16]															
rw															

15	14	13	12	11	10	9	8	7	6	5	4	3	2	1	0
DP[15:0]															
rw															

Bits	Fields	Descriptions
31:0	DPx[31:0]	Efuse debug password value. The factory value of these bits are 0.

4.4.8. Firmware AES key register x (EFUSE_AES_KEYx) (x = 0…3)

Address offset: 0x24 + 0x4 * x
Reset value: 0xXXXX XXXX. Load efuse macro values after reset.

This register cannot be read. This register can be written only when AESEN is 0. But the modified value of register will not be stored in efuse macro, unless a efuse program operation are executed successfully.

This register has to be accessed by word (32-bit)

31	30	29	28	27	26	25	24	23	22	21	20	19	18	17	16
AESKEY[31:16]															
w															

15	14	13	12	11	10	9	8	7	6	5	4	3	2	1	0
AESKEY[15:0]															
w															

Bits	Fields	Descriptions
31:0	AESKEY[31:0]	Efuse AES key value. The factory value of these bits are 0. User must continuously write the complete 16 bytes AES key into the EFUSE_AES_KEYx registers. The register can only be accessed by a word (32-bit) write. The 4 bytes in each register are stored in order from low to high (that is, the lower byte of the AESKEY corresponds to the lower bits of the register).

Meanwhile, AESKEY[31:0] writes to the EFUSE_AES_KEY0 register (offset 0x24), AESKEY[63:32] writes to the EFUSE_AES_KEY1 register (offset 0x28), AESKEY[95:64] writes to the EFUSE_AES_KEY2 register (offset 0x2C) and AESKEY[127:96] writes to the EFUSE_AES_KEY3 register (offset 0x30).
CRC calculation result is generated after writing the EFUSE_AES_KEY3 register (offset address 0x30).

4.4.9. User data register x (EFUSE_USER_DATAx) (x = 0…3)

Address offset: 0x34 + 0x4 * x
Reset value: 0xXXXX XXXX. Load efuse macro values after reset.

This register can be read out without restriction. This register can be modified only when UDLK is 0. This register can be written only when UDLK is 0. But the modified value of register will not be stored in efuse macro, unless a efuse program operation are executed successfully.

This register has to be accessed by word (32-bit)

31	30	29	28	27	26	25	24	23	22	21	20	19	18	17	16
USERDATA[31:16]															
Rw															

15	14	13	12	11	10	9	8	7	6	5	4	3	2	1	0
USERDATA[15:0]															
rw															

Bits	Fields	Descriptions
31:0	USERDATA[31:0]	Efuse USER_DATA value. The factory value of these bits are 0.

5. Power management unit (PMU)

5.1. Overview

The power consumption is regarded as one of the most important issues for the devices of GD32H7xx series. The Power management unit (PMU) provides three types of power saving modes, including Sleep, Deep-sleep and Standby mode. These modes reduce the power consumption and allow the application to achieve the best tradeoff among the conflicting demands of CPU operating time, speed and power consumption. For GD32H7xx devices, there are three power domains, including V_{DD} / V_{DDA} domain, 0.9V domain, and Backup domain, as is shown in ***Figure 5-1. Power supply overview***. The power of the V_{DD} domain is supplied directly by V_{DD}. An embedded LDO and Step-down voltage stabilizer, which is low power switched-mode power supply (SMPS step-down voltage stabilizer) is used to supply the 0.9V domain power. A power switch is implemented for the Backup domain. It can be powered from the V_{BAT} voltage when the main V_{DD} supply is shut down. Peripheral supply regulation USB regulator.

5.2. Characteristics

- Three power domains: V_{BAK}, V_{DD} / V_{DDA} and 0.9V power domains.
- Three power saving modes: Sleep, Deep-sleep and Standby modes.
- Internal Voltage regulator (LDO) supplies around 0.9V voltage source for 0.9V domain.
- Low Voltage Detector (LVD) can issue an interrupt or event when the power is lower than a programmed threshold.
- Battery power (V_{BAT}) for Backup domain when V_{DD} is shut down.
- LDO output voltage select for power saving.
- USB supply regulator.
- Power supply supervision: POR / PDR monitor / BOR monitor / LVD monitor / V_{DDA} Voltage Detector (VAVD) monitor / V_{BAK} thresholds / Temperature thresholds.
- V_{BAT} battery charging / Operating modes / Voltage scaling control / Low-power modes management.
- Step-down voltage stabilizer, which is low power switched-mode power supply (SMPS step-down voltage stabilizer).

5.3. Function overview

Figure 5-1. Power supply overview provides details on the internal configuration of the PMU and the relevant power domains.

Figure 5-1. Power supply overview

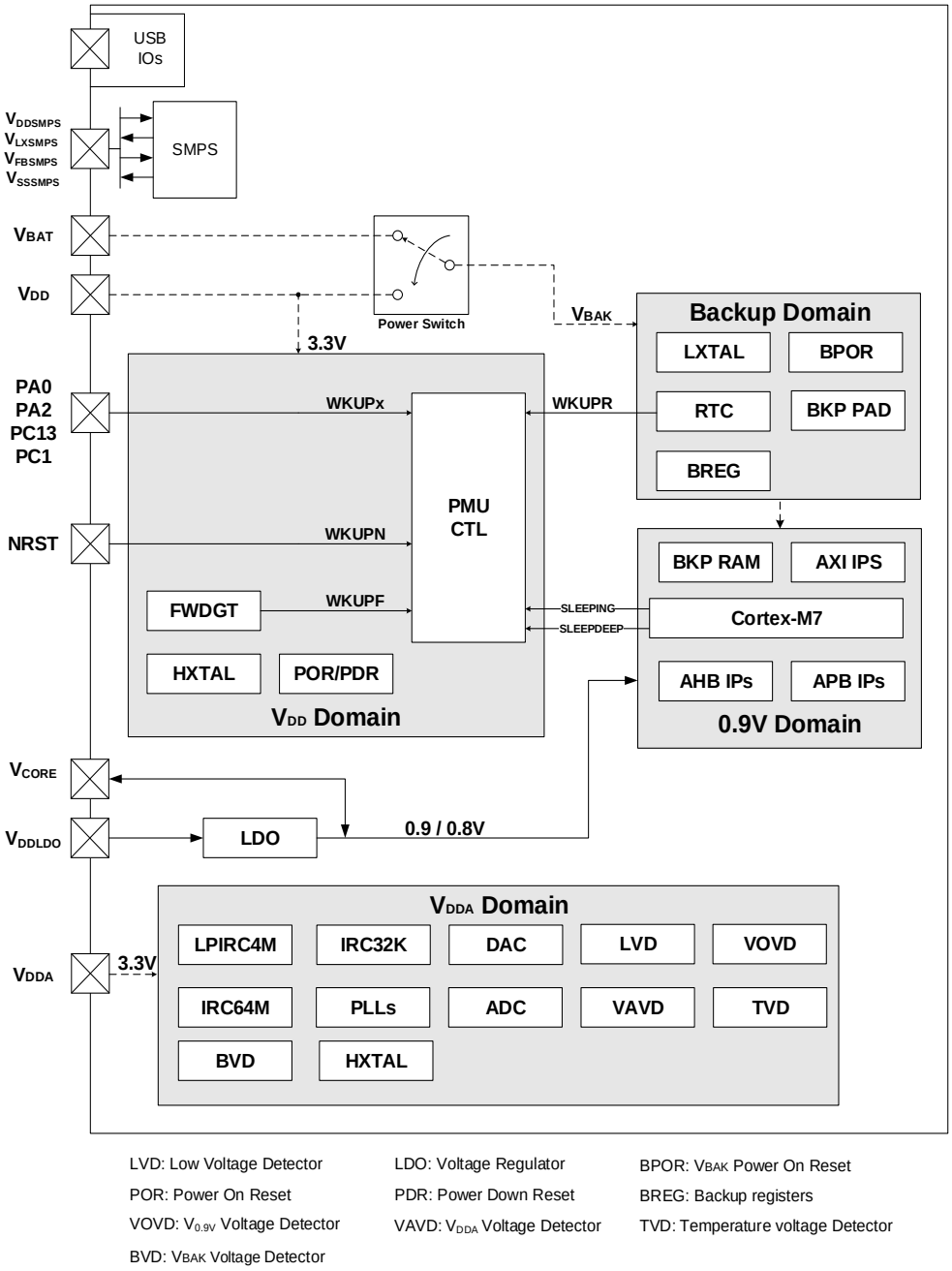

LVD: Low Voltage Detector
LDO: Voltage Regulator
BPOR: V_{BAK} Power On Reset
POR: Power On Reset
PDR: Power Down Reset
BREG: Backup registers
VOVD: $V_{0.9V}$ Voltage Detector
VAVD: V_{DDA} Voltage Detector
TVD: Temperature voltage Detector
BVD: V_{BAK} Voltage Detector

Note: The SMPS power supply is not supported on all devices. Please refer to the datasheet for details.

5.3.1. Backup domain

The Backup domain is powered by the V_{DD} or the battery power source (V_{BAT}) selected by the internal power switch, and the V_{BAK} pin which drives Backup domain, supplies power for RTC unit, LXTAL oscillator, BPOR and BREG, and three BKP PADs, including PC13 to PC15. In order to ensure the content of the Backup domain registers and the RTC supply, when V_{DD} supply is shut down, V_{BAT} pin can be connected to an optional standby voltage supplied by a battery or by another source. The power switch is controlled by the power down reset circuit in the V_{DD} / V_{DDA} domain. If no external battery is used in the application, it is recommended to connect V_{BAT} pin externally to V_{DD} pin with a 100nF external ceramic decoupling capacitor.

The Backup domain reset sources includes the Backup domain power-on-reset (BPOR) and the Backup domain software reset. The BPOR signal forces the device to stay in the reset mode until V_{BAK} is completely powered up. Also the application software can trigger the Backup domain software reset by setting the BKPRST bit in the RCU_BDCTL register to reset the Backup domain.

The clock source of the Real Time Clock (RTC) circuit can be derived from the Internal 32KHz RC oscillator (IRC32K) or the Low Speed Crystal oscillator (LXTAL), or HXTAL divided by RTCDIV[5:0] (in RCU_CFG0 register). When V_{DD} is shut down, only LXTAL is valid for RTC. Before entering the power saving mode by executing the WFI / WFE instruction, the Cortex®-M7 can setup the RTC register with an expected alarm time and enable the alarm function and according EXTI lines to achieve the RTC alarm event. After entering the power saving mode for a certain amount of time, the RTC alarm will wake up the device when the time match event occurs. The details of the RTC configuration and operation will be described in the ***Real time clock (RTC)***.

When the Backup domain is supplied by V_{DD} (V_{BAK} pin is connected to V_{DD}), the following functions are available:

- PC13 can be used as GPIO or RTC function pin described in ***Real time clock (RTC)***.
- PC14 and PC15 can be used as either GPIO or LXTAL Crystal oscillator pins.

When the Backup domain is supplied by V_{BAT} (V_{BAK} pin is connected to V_{BAT}), the following functions are available:

- PC13 can be used as RTC function pin described in the ***Real time clock (RTC)*** chapter.
- PC14 and PC15 can be used as LXTAL Crystal oscillator pins only.

Note: Since PC13, PC14, PC15 are supplied through the power switch, which can only be obtained by a small current, the speed of GPIOs PC13 to PC15 should not exceed 2MHz when they are in output mode (maximum load: 30pF).

The external V_{BAT} battery can be charged by the V_{DD} through an internal resistor. The charging resistor can be selected by configuring the VCRSEL bit in PMU_CTL2 register. A 5kOhms resistor or a 1.5kOhms resistor can be selected for external V_{BAT} battery charing. The external V_{BAT} battery charing is enabled by setting the VCEN bit in PMU_CTL2 register. When in BKP only mode, the V_{BAT} battery charing is disabled by hardware.

Note: In BKP only mode, V_{DD} is power-off, and the backup domain is power by V_{BAT} pin.

Backup domain voltage thresholds

There is an internal power switch, which can select the voltage source of Backup domain V_{BAT} or V_{DD} The supply voltage for Backup domain (V_{BAK}) can be monitored with a top voltage and a bottom voltage (V_{BAKT} and V_{BAKB}), when VBTMEN bit is set, if V_{BAK} is over V_{BAKT} or lower than V_{BAKB}, the flag bit V_{BATHF} / V_{BATLF} will set. And this is only available when BKPVSEN bit is set. Backup domain voltage thresholds, as is shown in ***Figure 5-2. Waveform of the Backup domain voltage thresholds***.

Figure 5-2. Waveform of the Backup domain voltage thresholds

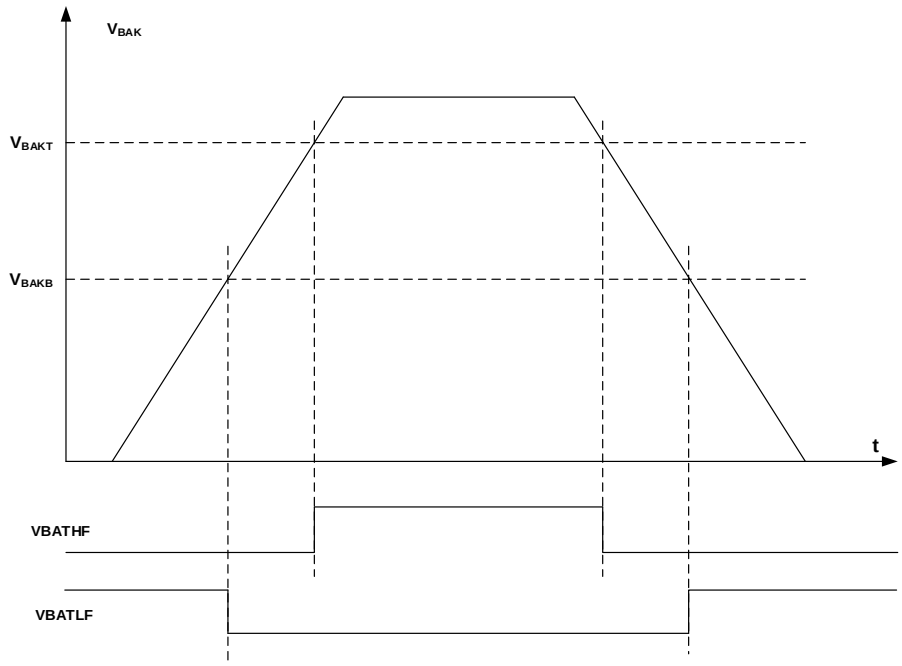

5.3.2. V_{DD} / V_{DDA} power domain

V_{DD} / V_{DDA} domain includes two parts: V_{DD} domain and V_{DDA} domain. V_{DD} domain includes HXTAL (high speed crystal oscillator), POR / PDR (power on / down reset), FWDGT (free watchdog timer), all pads except PC13 / PC14 / PC15, etc. V_{DDA} domain includes ADC / DAC (AD / DA Converter), LPIRC4M (internal 4MHz RC oscillator), IRC64M (internal 64MHz RC oscillator at 64MHz frequency), IRC32K (internal 32KHz RC oscillator), PLLs (phase locking loop), LVD (low voltage detector), VOVD ($V_{0.9V}$ voltage detector), VAVD (V_{DDA} voltage detector), TVD (temperature voltage detector), BVD (V_{BAK} voltage detector), etc.

V_{DD} domain

The LDO, which is implemented to supply power for the 0.9V domain, is always enabled after reset. It can be configured to operate in different status, including in the Sleep mode (0.9V full power on, low power), in the Deep-sleep mode (on or low power), and in the Standby mode

(power off).

The POR / PDR circuit is implemented to detect V_{DD} and generate the power reset signal which resets the whole chip except the Backup domain when the supply voltage is lower than the specified threshold. ***Figure 5-3. Waveform of the POR / PDR*** shows the relationship between the supply voltage and the power reset signal. V_{POR} indicates the threshold of power on reset, while V_{PDR} means the threshold of power down reset. The hysteresis voltage (Vhyst) is refer to the datasheet.

Figure 5-3. Waveform of the POR / PDR

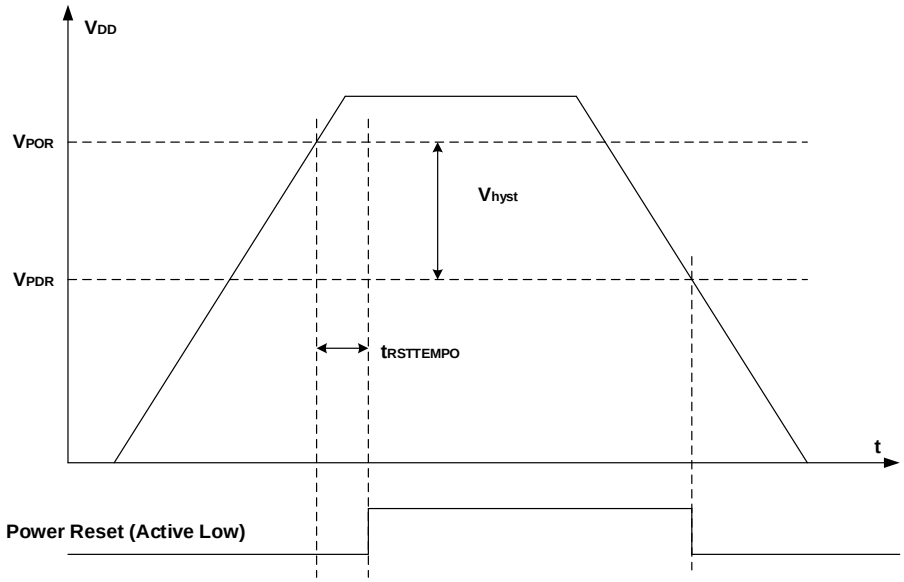

The BOR circuit is used to detect V_{DD} and generate the power reset signal which resets the whole chip except the Backup domain when the BOR_TH bits in option bytes is not 0b00 and the supply voltage is lower than the specified threshold which defined in the BOR_TH bits in option bytes. Notice that the POR / PDR circuit is always implemented regardless of BOR_TH bits in option bytes is 0b00 or not. ***Figure 5-4. Waveform of the BOR*** shows the relationship between the supply voltage and the BOR reset signal. V_{BOR}, which defined in the BOR_TH bits in option bytes, indicates the threshold of BOR on reset. The hysteresis voltage (V_{hyst}) is refer to the datasheet.

Figure 5-4. Waveform of the BOR

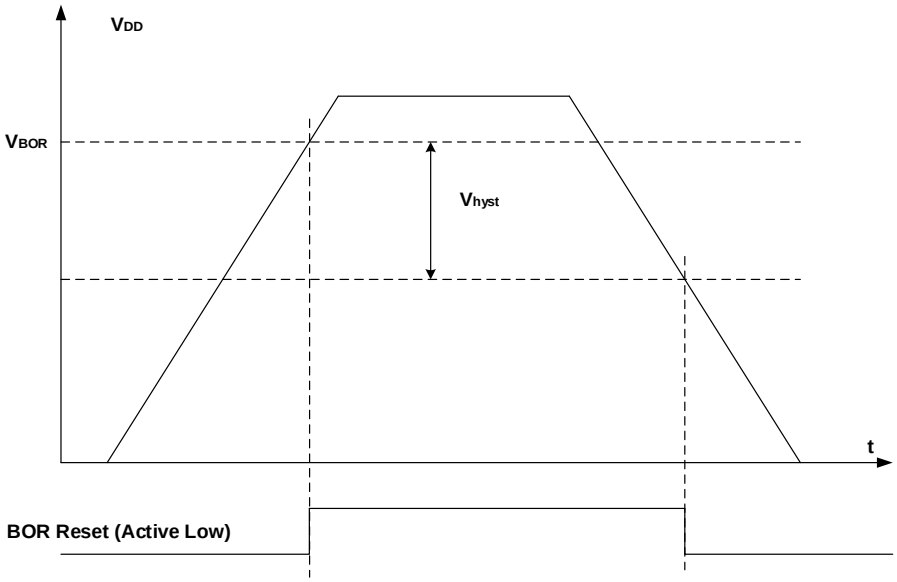

V_{DDA} domain

The LVD is used to detect whether the V_{DD} supply voltage is lower than a programmed threshold selected by the LVDT[2:0] bits in the Power control register(PMU_CTL0). The LVD is enabled by setting the LVDEN bit, and LVDF bit, which in PMU_CS, indicates if V_{DD} is higher or lower than the LVD threshold. This event is internally connected to the EXTI line 16 and can generate an interrupt if it is enabled through the EXTI registers.***Figure 5-5. Waveform of the LVD threshold*** shows the relationship between the LVD threshold and the LVD output (LVD interrupt signal depends on EXTI line 16 rising or falling edge configuration). The following figure shows the relationship between the supply voltage and the LVD signal. The hysteresis voltage (V_{hyst}) is refer to the datasheet.

Figure 5-5. Waveform of the LVD threshold

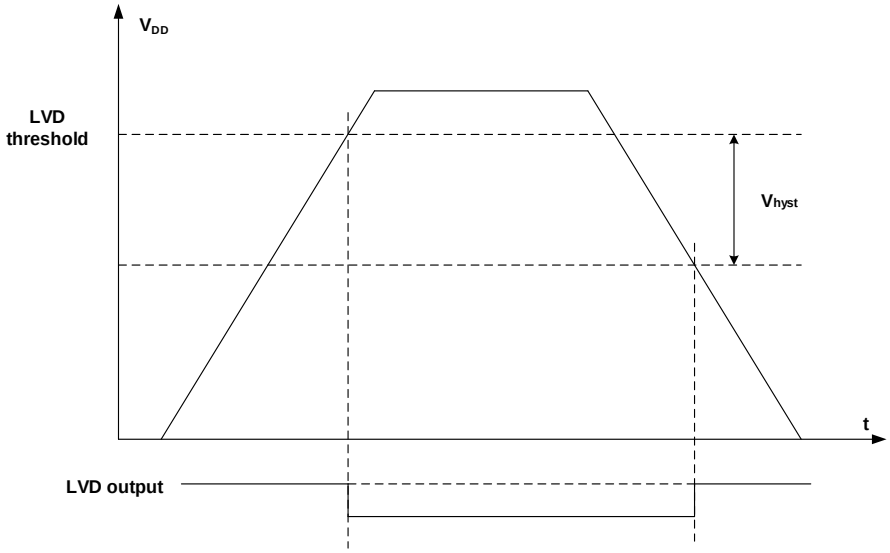

Generally, digital circuits are powered by V_{DD}, while most of analog circuits are powered by V_{DDA}. To improve the ADC and DAC conversion accuracy, the independent power supply V_{DDA} is implemented to achieve better performance of analog circuits. V_{DDA} can be externally connected to V_{DD} through the external filtering circuit that avoids noise on V_{DDA}, and V_{SSA} should be connected to V_{SS} through the specific circuit independently. Otherwise, when the V_{DD} and V_{DDA} are provided by different power supplies, the difference between V_{DD} and V_{DDA} during power-up and running time should not exceed 0.3V.

To ensure a high accuracy on ADC and DAC, the ADC / DAC independent external reference voltage should be connected to V_{REF+} / V_{REF-} pins. According to the different packages, V_{REF+} pin can be connected to V_{DDA} pin, or external reference voltage which refers to ***Table 20-2. ADC input pins definition*** and ***Table 21-1. DAC I/O description***, V_{REF-} pin must be connected to V_{SSA} pin. The V_{REF+} pin is only available on no less than 100-pin packages, or else the V_{REF+} pin is not available and internally connected to V_{DDA}. The V_{REF-} pin is only available on no less than 100-pin packages, or else the V_{REF-} pin is not available and internally connected to V_{SSA}.

V_{DDA} domain voltage thresholds

The V_{DDA} analog voltage detector (VAVD) is used to detect whether the V_{DDA} supply voltage is lower than a programmed threshold selected by the VAVDVC[1:0] bits in the power control register(PMU_CTL0). The VAVD is enabled by setting the VAVDEN bit, and VAVDF bit, which in PMU_CS, indicates if V_{DDA} is higher or lower than the specified VAVD threshold. This event is internally connected to the EXTI line 16 and can generate an interrupt if it is enabled through the EXTI registers. ***Figure 5-6. Waveform of the VAVD threshold*** shows the relationship between the VAVD threshold and the VAVDF. The hysteresis voltage (Vhyst) is refer to the datasheet.

Figure 5-6. Waveform of the VAVD threshold

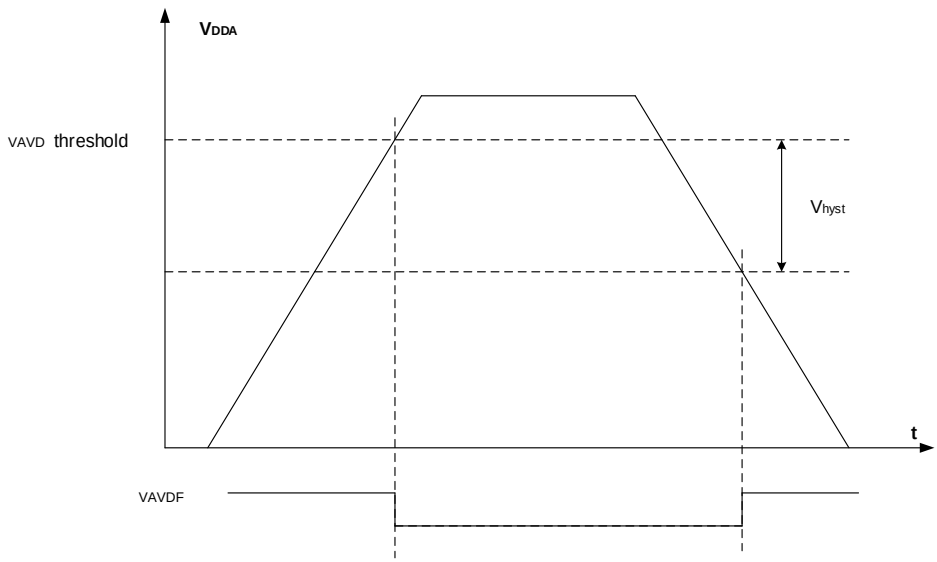

Temperature voltage thresholds

As will as Backup domain voltage thresholds, The junction temperature can be monitored by comparing it with two threshold levels, TEMP high and TEMP low. TEMPH and TEMPL flags, in the PMU_CTL1, indicate whether the device temperature is higher or lower than the threshold. The temperature voltage thresholds can be enabled / disabled via VBTMEN bit in PMU_CTL1. When enabled, the temperature thresholds increase power consumption. As an example the levels could be used to trigger a routine to perform temperature control tasks. The temperature thresholds are available only when the backup regulator is enabled (VBTMEN it set in the PMU_CTL1 register).

TEMPH and TEMPL wakeup interrupts are available on the RTC tamper signals .

Figure 5-7. Temperature thresholds

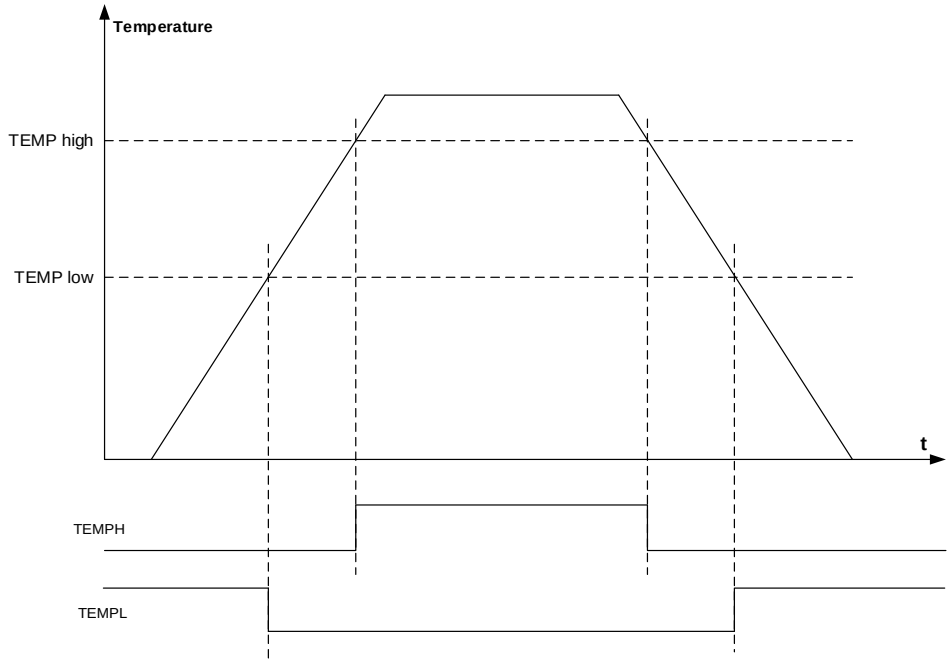

5.3.3. 0.9V power domain

The main functions that include Cortex®-M7 logic, AHB/APB peripherals, the APB interfaces for the Backup domain and the V_{DD} / V_{DDA} domain, etc, are located in this power domain. Once the 0.9V is powered up, the POR will generate a reset sequence on the 0.9V power domain. If need to enter the expected power saving mode, the associated control bits must be configured. Then, once a WFI (Wait for Interrupt) or WFE (Wait for Event) instruction is executed, the device will enter an expected power saving mode.

0.9V power supply

With the SMPS step-down stabilizer and LDO, it is possible to set the power source of the 0.9V power domain. Different configurations can provide seven effective 0.9V power supply modes.

- No configuration power supplies mode

After reset, the DVSEN bit is 0b1, the DVSCFG bit is 0b0, and the DVSVC[1:0] bits field is 0b00. At this time, the SMPS step-down stabilizer is on, working in normal mode, working voltage is 1.0V, and SMPS step-down stabilizer can power supplies for LDO; LDOEN bit is 0b1, LDO is on, and power supplies for 0.9V power domain, the power supplies voltage is controlled by LDOVS[2:0] bits field; BYPASS bit is 0b0, 0.9V power domain is not powered by V_{CORE} (external direct power supplies).

- LDO power supplies mode

The configuration method to enter this mode is that the DVSEN bit is 0b0, and the values of the DVSCFG and DVSVC[1:0] bits have no effect. At this time, the SMPS step-down stabilizer is in the off state; the LDOEN bit is 0b1, and the LDO is on. It also supplies power for the 0.9V power domain. The power supplies voltage is controlled by the LDOVS[2:0] bits. The working mode of the LDO is consistent with the low power consumption mode of the system; the BYPASS bit is 0b0, and the 0.9V power domain is not powered through V_{CORE} (external direct power supplies). ***Figure 5-8. LDO supplies for 0.9V power domain*** shows this power supplies mode.

Figure 5-8. LDO supplies for 0.9V power domain

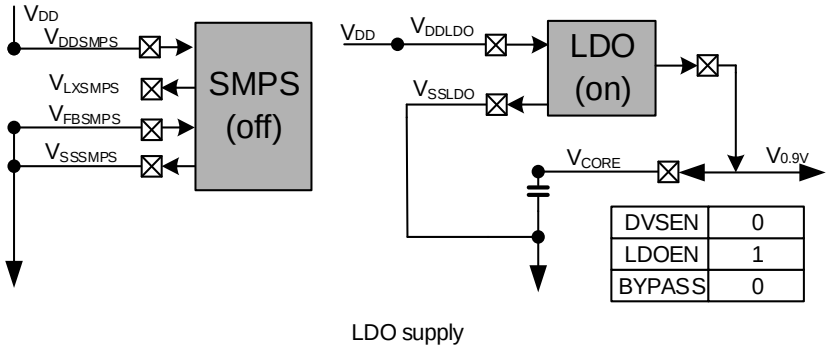

- SMPS power supplies mode

The configuration method to enter this mode is that the DVSEN bit is 0b1, DVSCFG bit is 0b0, and the values of DVSVC[1:0] bits have no effect. At this time, the SMPS step-down stabilizer is in the on state, It also supplies power for the 0.9V power domain. The power supplies voltage is controlled by the LDOVS[2:0] bits, the working mode of the SMPS is consistent with the low power consumption mode of the system; the LDOEN bit is 0b0, and the LDO is off; the BYPASS bit is 0b0, and the 0.9V power domain is not powered through V_{CORE} (external direct power supplies). ***Figure 5-9. SMPS supplies for 0.9V power domain*** shows this power supplies mode.

Figure 5-9. SMPS supplies for 0.9V power domain

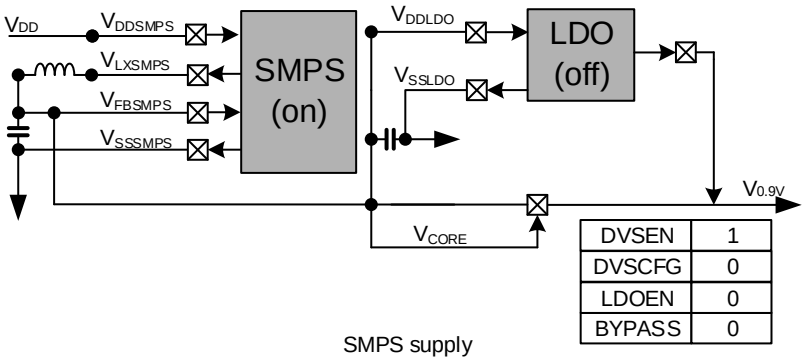

■ SMPS power supplies LDO, LDO power supplies $V_{0.9V}$ mode:

The configuration method to enter this mode is that the DVSEN bit is 0b1, DVSCFG bit is 0b0, and the values of DVSVC[1:0] bits are 0b01 / 0b10 / 0b11. At this time, the SMPS step-down stabilizer is in the on state, working in normal mode, the working voltage is 1.8V / 2.5V, It also supplies power for the LDO, the working mode of the SMPS is consistent with the low power consumption mode of the system; the LDOEN bit is 0b1, and the LDO is on, It also supplies power for the 0.9V power domain. The power supplies voltage is controlled by the LDOVS[2:0] bits. The working mode of the LDO is consistent with the low power consumption mode of the system; the BYPASS bit is 0b0, and the 0.9V power domain is not powered through V_{CORE} (external direct power supplies). ***Figure 5-10. SMPS supplies for LDO, LDO supplies for 0.9V power domain*** shows this power supplies mode.

Figure 5-10. SMPS supplies for LDO, LDO supplies for 0.9V power domain

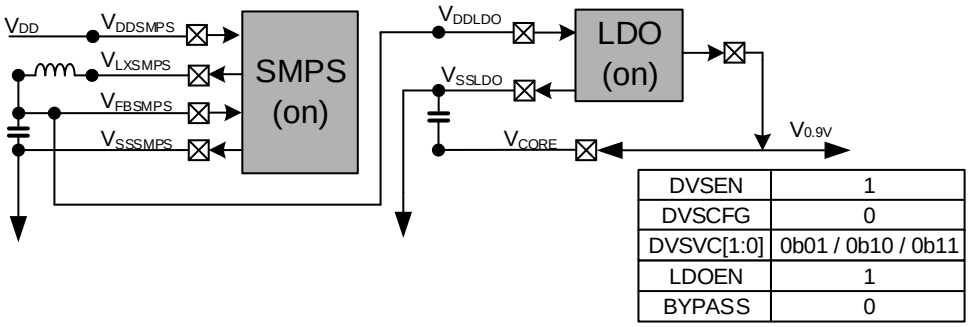

SMPS supplies for LDO, LDO Supplies for $V_{0.9V}$

■ SMPS power supplies LDO and external, LDO power supplies $V_{0.9V}$ mode

The configuration method to enter this mode is that the DVSEN bit is 0b1, DVSCFG bit is 0b1, and the values of DVSVC[1:0] bits are 0b01 / 0b10 / 0b11. At this time, the SMPS step-down stabilizer is in the on state, working in main mode, the working voltage is 1.8V / 2.5V, It also supplies power for external and the LDO, the working mode of the SMPS is consistent with the low power consumption mode of the system; the LDOEN bit is 0b1, and the LDO is on, It also supplies power to the 0.9V power domain. The power supplies voltage is controlled by the LDOVS[2:0] bits. The working mode of the LDO is consistent with the low power

consumption mode of the system; the BYPASS bit is 0b0, and the 0.9V power domain is not powered through V_{CORE} (external direct power supplies). ***Figure 5-11. SMPS supplies for LDO and external, LDO supplies for 0.9V power domain*** shows this power supplies mode.

Figure 5-11. SMPS supplies for LDO and external, LDO supplies for 0.9V power domain

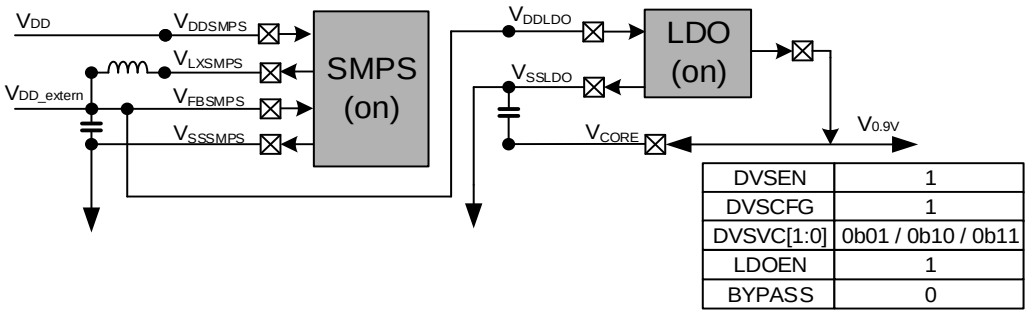

SMPS supplies for LDO and external, LDO supplies for $V_{0.9V}$

- SMPS power supplies external, external power supplies $V_{0.9V}$ mode

The configuration method to enter this mode is that the DVSEN bit is 0b1, DVSCFG bit is 0b1, and the values of DVSVC[1:0] bits are 0b01 / 0b10 / 0b11. At this time, the SMPS step-down stabilizer is in the on state, working in main mode, the working voltage is 1.8V / 2.5V, It also supplies power for external, external power may supplies for $V_{0.9V}$; the LDOEN bit is 0b0, and the LDO is off; the BYPASS bit is 0b1, and the 0.9V power domain is powered through V_{CORE} (external direct power supplies). ***Figure 5-12. SMPS supplies for external, external supplies for 0.9V power domain*** shows this power supplies mode.

Figure 5-12. SMPS supplies for external, external supplies for 0.9V power domain

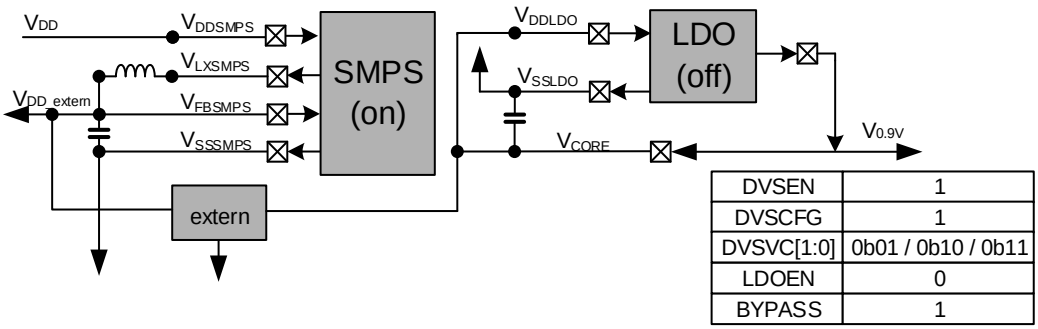

SMPS supplies for extrnal, extrnal supplies for $V_{0.9V}$

- bypass mode

The configuration method to enter this mode is that the DVSEN bit is 0b0, and the values of the DVSCFG and DVSVC[1:0] bits have no effect. At this time, the SMPS step-down stabilizer is in the off; the LDOEN bit is 0b0, and the LDO is off; the BYPASS bit is 0b1, and the 0.9V power domain is powered through V_{CORE} (external direct power supplies). ***Figure 5-13. Bypass*** shows this power supplies mode.

Figure 5-13. Bypass

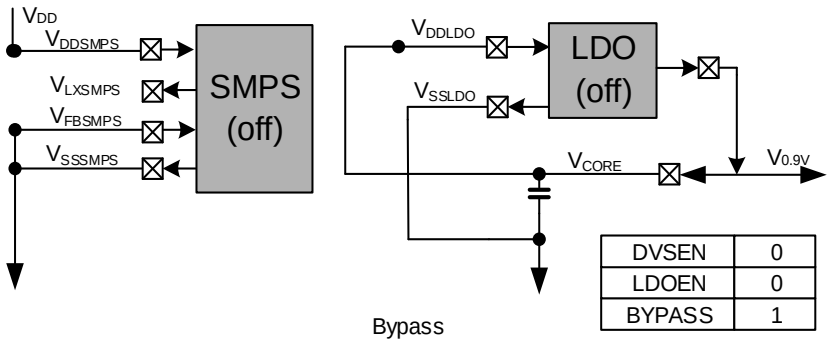

Table 5-1. Supply mode

Mode	Supply configuration	DVSEN	DVSCFG	LDOEN	DVSVC	LDOVS	BYPASS
0	No configuration power supplies mode	1	0	1	00	0b010	0
1	LDO power supplies mode	0	x	1	x	0b000-101	0
2	SMPS power supplies mode	1	0	0	x	0b000-0b101	0
3	SMPS power supplies LDO, LDO power supplies V0.9V mode	1	0	1	0b01/0b1x	0b000-0b101	0
4	SMPS power supplies LDO and external, LDO power supplies $V_{0.9V}$ mode	1	1	1	0b01/0b1x	0b000-0b101	0
5	SMPS power supplies external, external power supplies $V_{0.9V}$ mode	1	1	0	0b01/0b1x	x	1
6	bypass mode	0	x	0	x	x	1

Note: In addition to the above valid combinations, other DVSEN, DVSCFG, DVSVC[1:0], LDOEN, BYPASS bits or bit field configuration combinations are invalid. The power supplies state of the 0.9V power domain will remain the state after reset (no configure the power supplies mode).

Note: The maximum working frequency is related to the supply voltage. Please refer to the datasheet for details.

Note: The SMPS power supply is not supported on all devices. Please refer to the datasheet for details.

0.9V power thresholds detector

There is an internal 0.9V power thresholds detector, when VOVDEN is 0b1, it means 0.9V power thresholds detector is enabled. Once $V_{0.9V}$ power domain is over voltage, VOVDF will be set.

Figure 5-14. Waveform of the VOVD

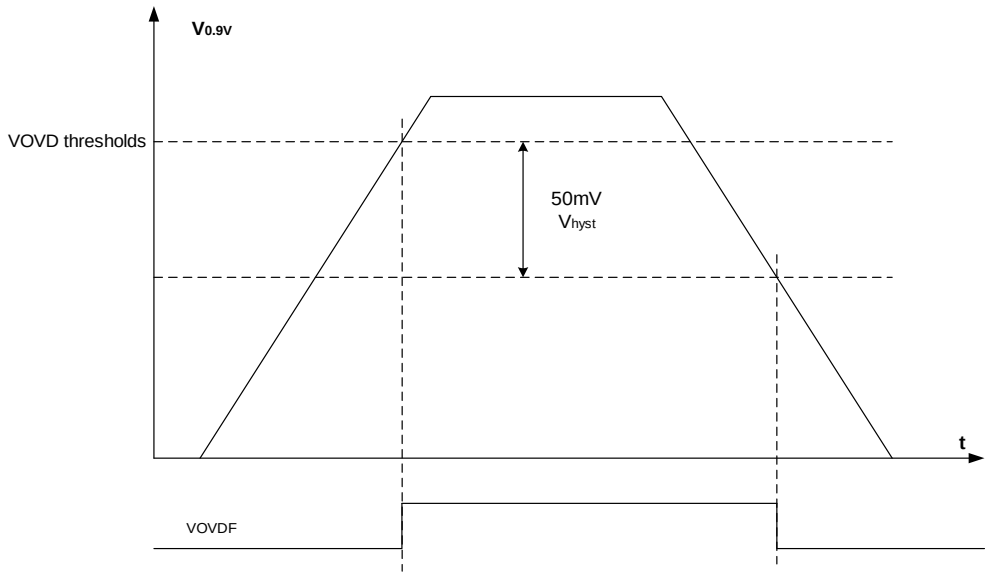

5.3.4. Power saving modes

After a system reset or a power reset, the GD32H7xx MCU operates at full function and all power domains are active. Users can achieve lower power consumption through slowing down the system clocks (HCLK, PCLK1, and PCLK2) or gating the clocks of the unused peripherals or configuring the LDO output voltage by LDOVS[2:0] bits in PMU_CTL3 register. The LDOVS[2:0] bits should be configured only when the PLL is off. Besides, three power saving modes are provided to achieve even lower power consumption, they are Sleep mode, Deep-sleep mode and Standby mode.

After system reset / power reset or wakeup from standby mode. The MCU enter normal run mode, no effect on all clocks, all power on. And the LDO work in 0.9V mode.

Sleep mode

The Sleep mode is corresponding to the SLEEPING mode of the Cortex®-M7. In Sleep mode, only clock of Cortex®-M7 is off. To enter the Sleep mode, it is only necessary to clear the SLEEPDEEP bit in the Cortex®-M7 System Control Register, and execute a WFI or WFE instruction. If the Sleep mode is entered by executing a WFI instruction, any interrupt can

wake up the system. If it is entered by executing a WFE instruction, any wakeup event can wake up the system (If SEVONPEND is 1, any interrupt can wake up the system, refer to Cortex-M7 Technical Reference Manual). The mode offers the lowest wakeup time as no time is wasted in interrupt entry or exit.

According to the SLEEPONEXIT bit in the Cortex®-M7 System Control Register, there are two options to select the Sleep mode entry mechanism.

- Sleep-now: if the SLEEPONEXIT bit is cleared, the MCU enters Sleep mode as soon as APB system reset, WFI or WFE instruction is executed.
- Sleep-on-exit: if the SLEEPONEXIT bit is set, the MCU enters Sleep mode as soon as it exits from the lowest priority ISR.

Deep-sleep mode

The Deep-sleep mode is based on the SLEEPDEEP mode of the Cortex®-M7. In Deep-sleep mode, all clocks in the 0.9V domain are off, and all of LPIRC4M, IRC64M, HXTAL and PLLs are disabled. Before entering the Deep-sleep mode, it is necessary to set the SLEEPDEEP bit in the Cortex®-M7 System Control Register, set LPMOD bit to 0b1 in the PMU_CTL0 register. Then, the device enters the Deep-sleep mode after a WFI or WFE instruction is executed. If the Deep-sleep mode is entered by executing a WFI instruction, any interrupt from EXTI lines can wake up the system. If it is entered by executing a WFE instruction, any wakeup event from EXTI lines can wake up the system (If SEVONPEND is 0b1, any interrupt from EXTI lines can wake up the system, refer to Cortex®-M7 Technical Reference Manual).

Note: If power-on or exit from standby, it need to wait a moment before entering Deep-sleep mode.

Standby mode

The Standby mode is based on the SLEEPDEEP mode of the Cortex®-M7, too. In Standby mode, the whole 0.9V domain is power off, the LDO is shut down, and all of LPIRC4M, IRC64M, HXTAL and PLLs are disabled. Before entering the Standby mode, it is necessary to set the SLEEPDEEP bit in the Cortex®-M7 System Control Register, and set the LPMOD bit to 0b in the PMU_CTL0 register, and clear WUF bit in the PMU_CS register. Then, the device enters the Standby mode after a WFI or WFE instruction is executed, and the STBF status flag in the PMU_CS register indicates that the MCU has been in Standby mode. There are five wakeup sources for the Standby mode, including the external reset from NRST pin, the RTC (alarm and tamp), the FWDGT reset, LCKMD and the rising edge on WKUP pins. The Standby mode achieves the lowest power consumption, but spends longest time to wake up. Besides, the contents of SRAM and registers in 0.9V power domain are lost in Standby mode. When exiting from the Standby mode, a power-on reset occurs and the Cortex®-M7 will execute instruction code from the 0x00000000 address.

Table 5-2. Power saving mode summary

Mode	Description	LDO	Entry	Wakeup	Wakeup status	Wakeup Latency
Sleep	Only CPU clock is off	LDO on	SLEEPDEEP = 0, WFI or WFE from run	Any interrupt for WFI Any event (or interrupt when SEVONPEND is 1) for WFE	normal run mode	-
Deep-sleep	1. All clocks in the 0.9V domain are off 2. Disable LPIRC4M, IRC64M, HXTAL and PLLs	LDO on	SLEEPDEEP = 1, LPMOD = 0, WFI or WFE	Any interrupt from EXTI lines for WFI Any event(or interrupt when SEVONPEND is 1) from EXTI for WFE	normal run mode	LPIRC4M / IRC64M (confirmed by DSPWUSSEL) wakeup time, + Flash wakeup time
Standby	1. The 0.9V domain is power off 2. LPIRC4M, IRC64M, HXTAL and PLLs	LDO off	SLEEPDEEP = 1, LPMOD = 1, WFI or WFE	1. NRST pin 2. WKUP pins 3. FWDGT reset 4. RTC (alarm and tamp) 5. LCKMD	normal run mode	IRC64M wakeup time, + LDO wakeup time+Flash wakeup time
BKP only mode	All VDD / $V_{0.9V}$ domain power off	LDO off	VDD off	VDD on	normal run mode	VDD power on sequence

Note: In Standby mode, all I/Os are in high-impedance state except NRST pin, PC13 pin when configured for RTC function, PC14 and PC15 pins when used as LXTAL crystal oscillator pins, and WKUP pins if enabled.

5.4. Register definition

PMU base address: 0x5800 5800

5.4.1. Control register 0 (PMU_CTL0)

Address offset: 0x00

Reset value: 0x0000 8000 (reset by wakeup from Standby mode)

This register can be accessed by word (32-bit).

31	30	29	28	27	26	25	24	23	22	21	20	19	18	17	16
Reserved												VOVDEN	VAVDVC[1:0]		VAVDEN
												rw	rw		rw

15	14	13	12	11	10	9	8	7	6	5	4	3	2	1	0
SLDOVS[1:0]		Reserved					BKPWEN	LVDT[2:0]			LVDEN	STBRST	WURST	STBMOD	Reserved
rs							rw	rw			rw	rc_w1	rc_w1	rw	

Bits	Fields	Descriptions
31:20	Reserved	Must be kept at reset value.
19	VOVDEN	Peripheral voltage on $V_{0.9V}$ detector enable bit This bit is set and cleared by software. 0: Peripheral voltage on $V_{0.9V}$ detector disabled. 1: Peripheral voltage on $V_{0.9V}$ detector enabled
18:17	VAVDVC[1:0]	V_{DDA} analog voltage detector voltage level configure bits These bits are set and cleared by software. 00: Configure V_{DDA} analog voltage detector voltage level to 1.7V 01: Configure V_{DDA} analog voltage detector voltage level to 2.1V 10: Configure V_{DDA} analog voltage detector voltage level to 2.5V 11: Configure V_{DDA} analog voltage detector voltage level to 2.8V
16	VAVDEN	V_{DDA} analog voltage detector voltage enable bit This bit is set and cleared by software. 0: V_{DDA} analog voltage detector voltage disabled. 1: V_{DDA} analog voltage detector voltage enabled
15:14	SLDOVS[1:0]	Deep-sleep mode voltage scaling selection These bits control the $V_{0.9V}$ voltage level in system Deep-sleep mode, to obtain the best trade-off between power consumption and performance. 00: SLDOVS Scale 0.6V 01: SLDOVS Scale 0.7V 10: SLDOVS Scale 0.8V (default) 11: SLDOVS Scale 0.9V

13:9	Reserved	Must be kept at reset value.
8	BKPWEN	Backup domain write enable bit This bit is set and cleared by software. 0: Disable write access to the registers in backup domain 1: Enable write access to the registers in backup domain After reset, any write access to the registers in Backup domain is ignored. This bit has to be set to enable write access to these registers.
7:5	LVDT[2:0]	Low voltage detector threshold 000: 2.1V 001: 2.3V 010: 2.4V 011: 2.6V 100: 2.7V 101: 2.9V 110: 3.0V 111: input analog voltage on PB7 (compared with 0.8V)
4	LVDEN	Low voltage detector enable bit This bit is set and cleared by software. 0: Disable low voltage detector 1: Enable low voltage detector **Note:** When LVD_LOCK bit is set to 1 in the SYSCFG_LKCTL register, LVDEN and LVDT[2:0] are read only.
3	STBRST	Standby flag reset bit This bit is set by software. 0: No effect 1: Reset the standby flag This bit is always read as 0.
2	WURST	Wakeup flag reset bit This bit is set by software. 0: No effect 1: Reset the wakeup flag This bit is always read as 0.
1	STBMOD	Standby Mode 0: Enter the Deep-sleep mode when the Cortex®-M7 enters SLEEPDEEP mode 1: Enter the Standby mode when the Cortex®-M7 enters SLEEPDEEP mode
0	Reserved	Must be kept at reset value.

5.4.2. Control and status register (PMU_CS)

Address offset: 0x04

Reset value: 0x0000 0000 (not reset by wakeup from Standby mode)

This register can be accessed by word (32-bit).

31	30	29	28	27	26	25	24	23	22	21	20	19	18	17	16
Reserved											VOVDF	Reserved			VAVDF
											r				r

15	14	13	12	11	10	9	8	7	6	5	4	3	2	1	0
Reserved		WUPEN5	Reserved	WUPEN3	Reserved	WUPEN1	WUPEN0	Reserved					LVDF	STBF	WUF
		rw		rw		rw	rw						r	r	r

Bits	Fields	Descriptions
31:21	Reserved	Must be kept at reset value.
20	VOVDF	Peripheral voltage on $V_{0.9V}$ detector flag bit This bit is set and cleared by hardware. It is valid only if VOVDEN is enabled. 0: $V_{0.9V}$ is lower than VOVD threshold(1.15V). 1: $V_{0.9V}$ is equal or higher than VOVD threshold(1.15V)
19:17	Reserved	Must be kept at reset value.
16	VAVDF	V_{DDA} analog voltage detector voltage output on V_{DDA} flag bit This bit is set and cleared by hardware. It is valid only if VAVDEN is enabled. 0: V_{DDA} is equal or higher than the VAVD threshold configured by VAVDVC bits. 1: V_{DDA} is lower than the VAVD threshold configured by VAVDVC bits
15:14	Reserved	Must be kept at reset value.
13	WUPEN5	WKUP Pin5 (PC1) enable 0: Disable WKUP pin5 function 1: Enable WKUP pin5 function If WUPEN5 is set before entering the power saving mode, a rising edge on the WKUP pin5 wakes up the system from the power saving mode. As the WKUP pin5 is active high, the WKUP pin5 is internally configured to input pull down mode. And set this bit will trigger a wakeup event when the input is already high.
12	Reserved	Must be kept at reset value.
11	WUPEN3	WKUP pin3 (PC13) enable 0: Disable WKUP pin3 function 1: Enable WKUP pin3 function If WUPEN3 is set before entering the power saving mode, a rising edge on the WKUP pin3 wakes up the system from the power saving mode. As the WKUP pin3 is active high, the WKUP pin3 is internally configured to input pull down mode. And set this bit will trigger a wakeup event when the input is already high.
10	Reserved	Must be kept at reset value.
9	WUPEN1	WKUP pin1 (PA2) enable

		0: Disable WKUP pin1 function 1: Enable WKUP pin1 function If WUPEN1 is set before entering the power saving mode, a rising edge on the WKUP pin1 wakes up the system from the power saving mode. As the WKUP pin1 is active high, the WKUP pin1 is internally configured to input pull down mode. And set this bit will trigger a wakeup event when the input is already high.
8	WUPEN0	WKUP pin0 (PA0) enable 0: Disable WKUP pin0 function 1: Enable WKUP pin0 function If WUPEN0 is set before entering the power saving mode, a rising edge on the WKUP pin0 wakes up the system from the power saving mode. As the WKUP pin0 is active high, the WKUP pin0 is internally configured to input pull down mode. And set this bit will trigger a wakeup event when the input is already high.
7:3	Reserved	Must be kept at reset value.
2	LVDF	Low voltage detector status flag 0: Low Voltage event has not occurred (V_{DD} is higher than the specified LVD threshold) 1: Low Voltage event occurred (V_{DD} is equal to or lower than the specified LVD threshold) **Note**: The LVD function is stopped in Standby mode.
1	STBF	Standby flag 0: The device has not entered the standby mode 1: The device has been in the standby mode This bit is cleared only by a POR/PDR or by setting the STBRST bit in the PMU_CTL0 register.
0	WUF	Wakeup Flag 0: No wakeup event has been received 1: Wakeup event occurred from the WKUP pins or the RTC alarm event This bit is cleared only by a POR / PDR or by setting the WURST bit in the PMU_CTL0 register.

5.4.3. Control register 1 (PMU_CTL1)

Address offset: 0x08

Reset value: 0x0000 0000 (reset by wakeup from Standby mode)

This register can be accessed by word (32-bit).

31	30	29	28	27	26	25	24	23	22	21	20	19	18	17	16
Reserved								TEMPHF	TEMPLF	VBATHF	VBATLF	Reserved			BKPVSRF
								r	r	r	r				r

15	14	13	12	11	10	9	8	7	6	5	4	3	2	1	0
Reserved											VBTMEN	Reserved			BKPVSEN
											rw				rw

Bits	Fields	Descriptions
31:24	Reserved	Must be kept at reset value.
23	TEMPHF	Temperature level monitoring versus high threshold 0: Temperature below high threshold level. 1: Temperature equal or above high threshold level.
22	TEMPLF	Temperature level monitoring versus low threshold 0: Temperature above low threshold level. 1: Temperature equal or below low threshold level.
21	VBATHF	VBAT level monitoring versus high threshold 0: VBAT level below high threshold level. 1: VBAT level equal or above high threshold level.
20	VBATLF	VBAT level monitoring versus low threshold 0: VBAT level above low threshold level. 1: VBAT level equal or below low threshold level.
19:17	Reserved	Must be kept at reset value.
16	BKPVSRF	Backup voltage stabilizer ready flag This bit is set by hardware to indicate that the backup regulator is ready. 0: Backup voltage stabilizer not ready. 1: Backup voltage stabilizer ready.
15:5	Reserved	Must be kept at reset value.
4	VBTMEN	VBAT and temperature monitoring enable. When set, the VBAT supply and temperature monitoring is enabled. 0: VBAT and temperature monitoring disabled. 1: VBAT and temperature monitoring enabled. **Note**: VBAT and temperature monitoring are only available when the backup regulator is enabled (VBTMEN bit set to 1).
3:1	Reserved	Must be kept at reset value.
0	BKPVSEN	Backup voltage stabilizer enable This bit is set and cleared by software. When set, the backup voltage stabilizer (used to maintain the backup RAM content in Standby and V_{BAT} modes) is enabled. When reset, the backup voltage stabilizer is off. The backup RAM can still be used in Run and Deep-sleep modes. However, its content will be lost in Standby and

V_{BAT} modes.

If BREN is set, the application must wait till the backup voltage stabilizer ready flag (BKPVSRF) is set. Which indicate that the data written into the SRAM will be maintained in Standby and V_{BAT} modes.

0: Backup voltage stabilizer disabled.

1: Backup voltage stabilizer enabled.

5.4.4. Control register 2 (PMU_CTL2)

Address offset: 0x10

Reset value: 0x0000 0046 (reset by wakeup from Standby mode)

This register can be accessed by word (32-bit).

31	30	29	28	27	26	25	24	23	22	21	20	19	18	17	16
Reserved					USB33RF	USBSEN	VUSB33DEN	Reserved							DVSRF
					r	rw	rw								r

15	14	13	12	11	10	9	8	7	6	5	4	3	2	1	0
Reserved						VCEN	VCRSEL	Reserved		DVSVC[1:0]		DVSCFG	DVSEN	LDOEN	BYPASS
						rw	rw			rw		rw	rw	rw	rw

Bits	Fields	Descriptions
31:27	Reserved	Must be kept at reset value.
26	USB33RF	USB supply ready flag bit 0: USB33 supply not ready. 1: USB33 supply ready.
25	USBSEN	USB voltage stabilizer enable. This bit is set and cleared by software. 0: USB voltage stabilizer disabled. 1: USB voltage stabilizer enabled.
24	VUSB33DEN	$V_{DD33USB}$ voltage level detector enable bit This bit is set and cleared by software. 0: $V_{DD33USB}$ voltage level detector disabled. 1: $V_{DD33USB}$ voltage level detector enabled.
23:17	Reserved	Must be kept at reset value.
16	DVSRF	Step-down voltage stabilizer ready flag bit This bit is set by hardware to indicate that the external supply from the step-down voltage stabilizer is ready. 0: External supply not ready 1: External supply ready.

15:10	Reserved	Must be kept at reset value.
9	VCEN	V_{BAT} battery charging enable 0: Disable V_{BAT} battery charging 1: Enable V_{BAT} battery charging
8	VCRSEL	V_{BAT} battery charging resistor selection 0: 5kOhms resistor is selected for charing V_{BAT} battery. 1: 1.5kOhms resistor is selected for charing V_{BAT} battery.
7:6	Reserved	Must be kept at reset value.
5:4	DVSVC[1:0]	Step-down voltage stabilizer output voltage level configure bits these bits are used when both the LDO and step-down converter are enabled with DVSEN and LDOEN enabled or when SDEXTHP is enabled. In this case DVSVS has to be written with a value different than 00 at system startup. 00: Reset value 01: Configure Step-down voltage stabilizer output voltage level to 1.8V 10 and 11: Configure Step-down voltage stabilizer output voltage level to 2.5V
3	DVSCFG	Step-down voltage stabilizer forced on and in High Power MR mode. 0: SMPS step-down stabilizer in normal operating mode. 1: SMPS step-down stabilizer forced ON and in MR mode
2	DVSEN	Step-down voltage stabilizer enable bit This bit is set and cleared by software. 0: Step-down voltage stabilizer disabled 1: Step-down voltage stabilizer enabled.
1	LDOEN	Low drop-out voltage stabilizer enable bit This bit is set and cleared by software. 0: Low drop-out voltage stabilizer disabled. 1: Low drop-out voltage stabilizer enabled
0	BYPASS	Power management unit bypass control bit This bit is set and cleared by software. 0: Power management unit normal operation. 1: Power management unit bypassed, voltage monitoring still active.

5.4.5. Control register 3 (PMU_CTL3)

Address offset: 0x14

Reset value: 0x0000 2000

This register can be accessed by word (32-bit).

31	30	29	28	27	26	25	24	23	22	21	20	19	18	17	16
Reserved															VOVRF
															r

15	14	13	12	11	10	9	8	7	6	5	4	3	2	1	0
Reserved	LDOVS[2:0]			Reserved											
	rw														

Bits	Fields	Descriptions
31:17	Reserved	Must be kept at reset value.
16	VOVRF	$V_{0.9V}$ voltage ready bit This bit is set by hardware to indicate that the $V_{0.9V}$ supply is ready. 0: $V_{0.9V}$ supply not ready 1: $V_{0.9V}$ supply ready.
15	Reserved	Must be kept at reset value.
14:12	LDOVS[2:0]	LDO output voltage select These bits control the $V_{0.9V}$ voltage level, different voltage levels and system clock frequencies will make MCU have different performance. When the performance is expected to be reduced, the system clock frequency should be reduced first, and then the LDO output voltage value should be changed. On the contrary, when the performance is improved, the LDO output voltage value should be changed first, and then the system clock frequency should be improved 000: LDO output 0.8V mode 001: LDO output 0.85V mode 010: LDO output 0.9V mode (default) 011: LDO output 0.95V mode 100: LDO output 0.975V mode 101: LDO output 1V mode Other: Reserved
11:0	Reserved	Must be kept at reset value.

5.4.6. Parameter register (PMU_PAR)

Address offset: 0x18

Reset value: 0x000A 0000

This register can be accessed by word (32-bit).

31	30	29	28	27	26	25	24	23	22	21	20	19	18	17	16
Reserved											TSW_IRCCNT[4:0]				
													rw		

15	14	13	12	11	10	9	8	7	6	5	4	3	2	1	0
Reserved				PMU_CNT[11:0]											
									rc_w0						

Bits	Fields	Descriptions

31:21	Reserved	Must be kept at reset value.
20:16	TSW_IRCCNT[4:0]	When enter Deep-sleep, switch to LPIRC4M / IRC64M (confirmed by DSPWUSSEL) clock. Wait the LPIRC4M / IRC64M (confirmed by DSPWUSSEL) counter and then set stop_state signal. The default is 10 clocks.
15:12	Reserved	Must be kept at reset value.
11:0	PMU_CNT[11:0]	Exit Deep-sleep mode wait time count configure bits When exit Deep-sleep mode, before open system clock, it recommend 5us~50us delay.

6. Reset and clock unit (RCU)

6.1. Reset control unit (RCTL)

6.1.1. Overview

GD32H7xx reset control unit includes the control of three kinds of reset: power reset, system reset and backup domain reset. The power reset, known as a cold reset, resets the full system except the backup domain. The system reset resets the processor core and peripheral IP components except for the SW-DP controller and the backup domain. The backup domain reset resets the backup domain. The resets can be triggered by an external signal, internal events and the reset generators. More information about these resets will be described in the following sections.

6.1.2. Function overview

Power reset

The power reset is generated by either an external reset as power on and power down reset (POR / PDR reset), brownout reset (BOR reset) or by the internal reset generator when exiting Standby mode. The power reset sets all registers to their reset values except the Backup domain. The Power reset whose active signal is low, it will be de-asserted when the internal LDO voltage regulator is ready to provide 0.9V power. The reset service routine vector is fixed at address 0x0000_0004 in the memory map.

System reset

A system reset is generated by the following events:

- A power reset (POWER_RSTn).
- A external pin reset (NRST).
- A window watchdog timer reset (WWDGT_RSTn).
- A free watchdog timer reset (FWDGT_RSTn).
- The SYSRESETREQ bit in Cortex®-M7 application interrupt and reset control register is set (SW_RSTn).
- Reset generated when entering Standby mode when resetting nRST_STDBY bit in user option bytes (OB_STDBY_RSTn).
- Reset generated when entering Deep-sleep mode when resetting nRST_DPSLP bit in user option bytes (OB_DPSLP_RSTn).

A system reset resets the processor core and peripheral IP components except for the SW-

DP controller and the backup domain.

A system reset pulse generator guarantees low level pulse duration of 20 μs for each reset source (external or internal reset).

Figure 6-1. The system reset circuit

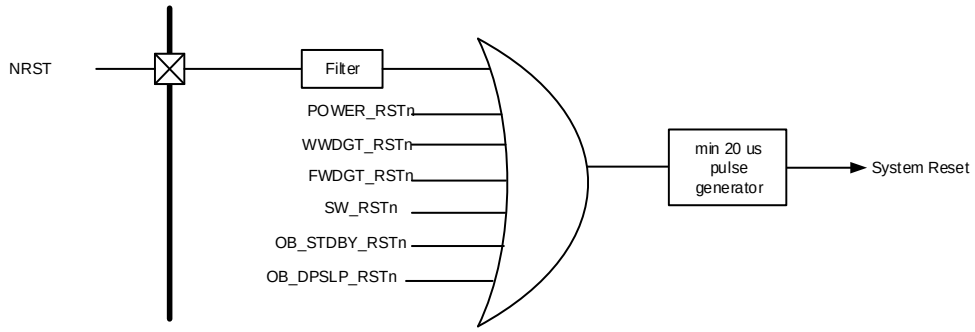

Backup domain reset

A backup domain reset is generated by setting the BKPRST bit in the Backup domain control register or backup domain power on reset (VDD or VBAT power on, if both supplies have previously been powered off).

Note: The BKPSRAM is not reset by backup domain reset.

6.2. Clock control unit (CCTL)

6.2.1. Overview

The clock control unit provides a range of frequencies and clock functions. These include a Internal 64M RC oscillator (IRC64M), a Internal 48M RC oscillator (IRC48M), a High Speed crystal oscillator (HXTAL), a Low Speed Internal 32K RC oscillator (IRC32K), a Low Speed crystal oscillator (LXTAL), a Low Power Internal 4M RC oscillator (LPIRC4M), five Phase Lock Loop (PLL), a HXTAL clock monitor, a LXTAL clock monitor, clock prescalers, clock multiplexers and clock gating circuitry.

The clocks of the AXI, AHB, APB and Cortex®-M7 are derived from the system clock (CK_SYS) which can source from the IRC64M, HXTAL, LPIRC4M or PLL0. The maximum operating frequency of the system clock (CK_SYS) can be up to 600 MHz.

Figure 6-2. Clock tree

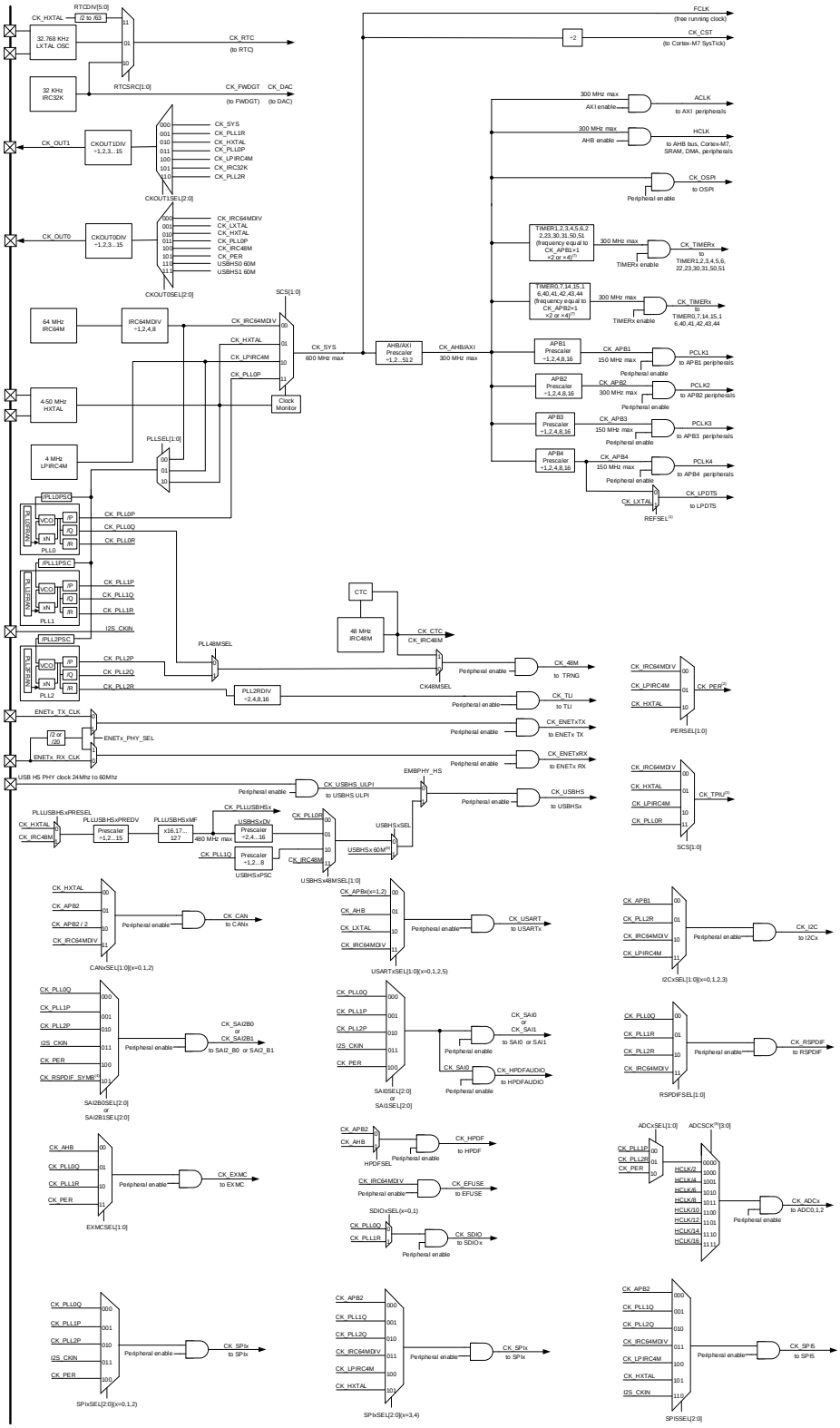

(1). The REFSEL is LPDTS reference clock which is clocked by CK_APB4 or CK_LXTAL, refer to ***Figure 40-1. LPDTS block diagram***.

(2). The CK_PER is peripheral clock which is clocked by CK_IRC64MDIV, CK_LPIRC4M or CK_HXTAL.

(3). The CK_TPIU is Trace Port Interface Unit (TPIU) clock which is clocked by CK_IRC64MDIV, CK_HXTAL,

CK_LPIRC4M or CK_PLL0R.

(4). The CK_RSPDIF_SYMB is RSPDIF channel symbol clock, refer to ***Figure 33-1. RSPDIF block diagram***.

(5). The ADCSCK is ADC synchronization clock seclection bits, refer to ***Sync control register (ADC_SYNCCTL)***.

(6). USBHSx 60M is USBHSx internal PHY 60M input source clock, refer to ***Internal embedded PHY***.

(7). TIMER clock frequency, refer to the TIMERSEL bit in the RCU_CFG1 register.

The frequency of AXI, AHB, APB4, APB3, APB2 and the APB1 domains can be configured by each prescaler. The maximum frequency of the AXI / AHB and the APB4 / APB3 / APB2 / APB1 domains is 300 MHz / 300 MHz / 150 MHz / 150 MHz / 300 MHz / 150 MHz. The Cortex System Timer (SysTick) external clock is clocked with the system clock (CK_SYS) divided by 2. The SysTick can work either with this clock or with the system clock (CK_SYS), configurable in the SysTick control and status register.

The ADCs are clocked by the clock of PLL1P, PLL2R, CK_PER selected by the ADCxSEL or by the clock of AHB divided by 2, 4, 6, 8, 10, 12, 14, 16.

The TIMERs are clocked by the clock divided from CK_AHB. The frequency of TIMERs clock is equal to CK_APBx, twice the CK_APBx or four times the CK_APBx. Please refer to TIMERSEL bit in RCU_CFG1 for detail.

The TRNG are clocked by the clock of CK_48M. The CK_48M is selected from the clock of PLL0Q, the clock of PLL2P or the clock of IRC48M by PLL48MSEL and CK48MSEL bit in RCU_ADDCTL0 register. The TRNG supports clock switch dynamically.

The USBHS ULPI is clocked by external ULPI PHY clock or the internal clock , which select by EMBPHY_HS in USBHS_GUSBCS register. The USBHS internal clock is configured by the USBHSxSEL bits in RCU_USBCLKCTL register.

The CTC is clocked by the clock of IRC48M. The IRC48M can be automatically trimmed by CTC unit.

The USART is clocked by the clock of CK_APBx, CK_AHB, CK_LXTAL or CK_IRC64MDIV which defined by USARTxSEL bits in RCU_CFG1 register. The USART supports clock switch dynamically.

The I2C is clocked by the clock of CK_APB1, CK_PLL2R, CK_IRC64MDIV or CK_LPIRC4M which defined by I2CxSEL bits in RCU_CFG0 register or RCU_CFG3 register. The I2C supports clock switch dynamically.

The SPI0(I2S0), SPI1(I2S1) and SPI2(I2S2) are clocked by the clock of CK_PLL0Q, CK_PLL1P, CK_PLL2P, I2S_CKIN or CK_PER which defined by SPIxSEL(x = 0,1,2) bits in RCU_CFG5 register. The SPI0(I2S0), SPI1(I2S1) and SPI2(I2S2) support clock switch dynamically.

The SPI3 and SPI4 are clocked by the clock of CK_APB2, CK_PLL1Q, CK_PLL2Q, CK_IRC64MDIV, CK_LPIRC4M or CK_HXTAL which defined by SPIxSEL(x = 3,4) bits in RCU_CFG5 register. The SPI3 / SPI4 supports clock switch dynamically.

The SPI5(I2S5) is clocked by the clock of CK_APB2, CK_PLL1Q, CK_PLL2Q,

CK_IRC64MDIV, CK_LPIRC4M, CK_HXTAL or I2S_CKIN which defined by SPI5SEL bits in RCU_CFG5 register. The SPI5 / I2S5 supports clock switch dynamically.

The OSPI is clocked by the clock of CK_AHB.

The LPDTS is clocked by the clock of CK_APB4 or CK_LXTAL.

The CAN is clocked by the clock of CK_HXTAL, CK_APB2, CK_APB2 / 2 or CK_IRC64MDIV which defined by CANxSEL bits in RCU_CFG1 register. The CAN supports clock switch dynamically.

The RSPDIF is clocked by the clock of CK_PLL0Q, CK_PLL1R, CK_PLL2R or CK_IRC64MDIV which defined by RSPDIFSEL bits in RCU_CFG1 register. The RSPDIF supports clock switch dynamically.

The SAI2 is clocked by the clock of CK_PLL0Q, CK_PLL1P, CK_PLL2P, I2S_CKIN, CK_PER or CK_RSPDIF_SYMB which defined by SAI2B0SEL bits or SAIB1SEL bits in RCU_CFG2 register. The SAI2 supports clock switch dynamically.

The SAI0 and SAI1 are clocked by the clock of CK_PLL0Q, CK_PLL1P, CK_PLL2P, I2S_CKIN or CK_PER which defined by SAI0SEL bits or SAI1SEL bits in RCU_CFG2 register. The SAI0 and SAI1 supports clock switch dynamically.

The HPDF is clocked by the clock of CK_AHB or CK_APB2 which defined by HPDFSEL bit in RCU_CFG1 register. The HPDF supports clock switch dynamically.

The HPDF_AUDIO is clocked by the clock of CK_PLL0Q, CK_PLL1P, CK_PLL2P, I2S_CKIN or CK_PER which defined by SAI0SEL bits in RCU_CFG2 register.

The EXMC is clocked by the clock of CK_AHB, CK_PLL0Q, CK_PLL1R or CK_PER which defined by EXMCSEL bits in RCU_CFG4 register. The EXMC supports clock switch dynamically.

The SDIO is clocked by the clock of CK_PLL0Q or CK_PLL1R which defined by SDIOxSEL bits in RCU_CFG3 or RCU_CFG4 register. The SDIO supports clock switch dynamically.

The EFUSE is clocked by CK_IRC64MDIV.

The TLI is clocked by the clock of PLL2R divided by 2, 4, 8, 16 which defined by PLL2RDIV bits in RCU_CFG1 register.

The ENETx TX / RX are clocked by External PIN (ENETx_TX_CLK / ENETx_RX_CLK), which select by ENET0_PHY_SEL bit or ENET1_PHY_SEL bit in SYSCFG_PMCFG register.

The RTC is clocked by LXTAL clock or IRC32K clock or HXTAL clock divided by 2 to 63 (defined by RTCDIV bits in RCU_CFG0) which select by RTCSRC bit in backup domain control register (RCU_BDCTL). After the RTC select HXTAL clock divided by 2 to 63 (defined by RTCDIV bits in RCU_CFG0), the clock disappeared when the 0.9V core domain power off. After the RTC select IRC32K, the clock disappeared when V_{DD} power off. When the RTC select LXTAL, the clock disappeared when V_{DD} and V_{BAT} power off.

The FWDGT is clocked by IRC32K clock, which is forced on when FWDGT started.

6.2.2. Characteristics

- 4 to 50 MHz High Speed crystal oscillator (HXTAL).
- Internal 64 MHz RC oscillator (IRC64M).
- Internal 48 MHz RC oscillator (IRC48M).
- 32,768 Hz Low Speed crystal oscillator (LXTAL).
- Internal 32KHz RC oscillator (IRC32K).
- Low Power Internal 4M RC oscillator (LPIRC4M).
- PLL clock source can be HXTAL, LPIRC4M or IRC64M.
- Integer and fraction factors of PLLs.
- PLLs fraction factors can be modified at runtime.
- Peripheral clock switch dynamically.
- HXTAL clock monitor.
- LXTAL clock monitor.

6.2.3. Function overview

High speed crystal oscillator (HXTAL)

The high speed external crystal oscillator (HXTAL), which has a frequency from 4 to 50 MHz, produces a highly accurate clock source for use as the system clock. A crystal with a specific frequency must be connected and located close to the two HXTAL pins. The external resistor and capacitor components connected to the crystal are necessary for proper oscillation.

Figure 6-3. HXTAL clock source

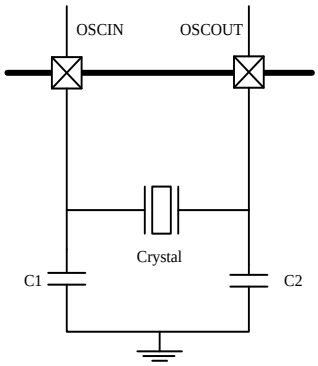

The HXTAL crystal oscillator can be switched on or off using the HXTALEN bit in the control register RCU_CTL. The HXTALSTB flag in control register RCU_CTL indicates if the high-speed external crystal oscillator is stable. When the HXTAL is powered up, it will not be released for use until this HXTALSTB bit is set by the hardware. This specific delay period is known as the oscillator “Start-up time”. As the HXTAL becomes stable, an interrupt will be generated if the related interrupt enable bit HXTALSTBIE in the Interrupt Register RCU_INT is set. At this point the HXTAL clock can be used directly as the system clock source or the PLL input clock.

Select external clock bypass mode by setting the HXTALBPS and HXTALEN bits in the control register RCU_CTL. The CK_HXTAL is equal to the external clock which drives the OSCIN pin.During bypass mode, the signal is connected to OSCIN, and OSCOUT remains in the suspended state, as shown in ***Figure 6-4. HXTAL clock source in bypass mode***. The CK_HXTAL is equal to the external clock which drives the OSCIN pin.

Figure 6-4. HXTAL clock source in bypass mode

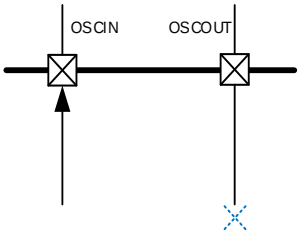

Internal 64M RC oscillators (IRC64M)

The internal 64M RC oscillator, IRC64M, has a fixed frequency of 64 MHz and is the default clock source selection for the CPU when the device is powered up. If the IRC64MDIV[1:0] bits in RCU_ADDCTL1 register is configured, the CK_IRC64MDIV can output 8, 16, 32, 64MHz clock. The IRC64M oscillator provides a lower cost type clock source as no external components are required. The IRC64M RC oscillator can be switched on or off using the IRC64MEN bit in the control register RCU_CTL. The IRC64MSTB flag in the control register RCU_CTL is used to indicate if the internal 64M RC oscillator is stable. The start-up time of the IRC64M oscillator is shorter than the HXTAL crystal oscillator. An interrupt can be generated if the related interrupt enable bit, IRC64MSTBIE, in the Clock Interrupt Register, RCU_INT, is set when the IRC64M becomes stable. The CK_IRC64MDIV clock can also be used as the system clock source or the PLL input clock.

The frequency accuracy of the IRC64M can be calibrated by the manufacturer, but its operating frequency is still less accurate than HXTAL. The application requirements, environment and cost will determine which oscillator type is selected.

If the HXTAL or PLL0P is the system clock source, to minimize the time required for the system to recover from the Deep-sleep Mode, the hardware forces the CK_IRC64MDIV or CK_LPIR4M clock to be the system or kernel clock when the system initially wakes-up.

Internal 48M RC oscillators (IRC48M)

The internal 48M RC oscillator, IRC48M, has a fixed frequency of 48 MHz. The IRC48M oscillator provides a lower cost type clock source as no external components are required when USBHS / TRNG used. The IRC48M RC oscillator can be switched on or off using the IRC48MEN bit in the RCU_ADDCTL0 Register. The IRC48MSTB flag in the RCU_ADDCTL0 Register is used to indicate if the internal 48M RC oscillator is stable. An interrupt can be generated if the related interrupt enable bit, IRC48MSTBIE, in the RCU_ADDINT Register, is set when the IRC48M becomes stable. The IRC48M clock is used for the clocks of USBHS / TRNG.

The frequency accuracy of the IRC48M can be calibrated by the manufacturer, but its operating frequency is still not enough accurate because the USBHS need the frequency must between 48MHz±1%. A hardware automatically dynamic trim performed in CTC unit adjust the IRC48M to the needed frequency.

Low speed crystal oscillator (LXTAL)

The low speed external crystal or ceramic resonator oscillator, which has a frequency of 32,768 Hz, produces a low power but highly accurate clock source for the Real Time Clock circuit. The LXTAL oscillator can be switched on or off using the LXTALEN bit in the backup domain control register (RCU_BDCTL). The LXTALSTB flag in the backup domain control register (RCU_BDCTL) will indicate if the LXTAL clock is stable. An interrupt can be generated if the related interrupt enable bit, LXTALSTBIE, in the Interrupt Register RCU_INT is set when the LXTAL becomes stable.

Select external clock bypass mode by setting the LXTALBPS and LXTALEN bits in the backup domain control register (RCU_BDCTL). The CK_LXTAL is equal to the external clock which drives the OSC32IN pin.

Internal 32K RC oscillator (IRC32K)

The internal RC oscillator has a frequency of about 32 kHz and is a low power clock source for the real time clock circuit or the rree watchdog timer. The IRC32K offers a low cost clock source as no external components are required. The IRC32K RC oscillator can be switched on or off by using the IRC32KEN bit in the Reset source / clock register (RCU_RSTSCK). The IRC32KSTB flag in the reset source / clock register RCU_RSTSCK will indicate if the IRC32K clock is stable. An interrupt can be generated if the related interrupt enable bit IRC32KSTBIE in the clock interrupt register (RCU_INT) is set when the IRC32K becomes stable.

Low Power Internal 4M RC oscillator (LPIRC4M)

The low power internal 4M RC oscillator has a frequency of about 4 MHz and is a low power clock source for use as the system clock or PLL input clock. The LPIRC4M offers a low cost clock source as no external components are required. The LPIRC4M RC oscillator can be switched on or off by using the LPIRC4MEN bit in the additional clock control register 1 (RCU_ADDCTL1). The LPIRC4MSTB flag in the clock interrupt register (RCU_INT) will indicate if the LPIRC4M clock is stable. An interrupt can be generated if the related interrupt enable bit LPIRC4MSTBIE in the clock interrupt register (RCU_INT) is set when the LPIRC4M becomes stable.

The frequency accuracy of the LPIRC4M can be calibrated by the manufacturer. After reset, the calibration is loaded in LPIRC4MCALIB bits in RCU_ADDCTL1 register.

If the HXTAL or PLL0P is the system clock source, to minimize the time required for the system to recover from the Deepsleep Mode, the hardware forces the CK_IRC64MDIV or

CK_LPIR4M clock to be the system or kernel clock when the system initially wakes-up.

Phase locked loop (PLL)

There are five internal Phase Locked Loop, the PLL0, PLL1, PLL2, PLLUSBHS0 and PLLUSBHS1. The PLL0, PLL1 and PLL2 support integer and fraction factors and the fraction factors can be modified at run time. Otherwise, the PLL0, PLL1 and PLL2 can generate P / Q / R clock output respectively. The PLL0P could be used to generator system clock (no more than 600MHz).

For each PLL, When PLLxFRAEN bit is '1' and PLLxFRAN value is not '0' in RCU_PLLxFRA register, the PLLx is in fraction mode, for example:

$$CK_PLL0VCO = CK_PLL0VCOSRC * \left(PLL0N + \frac{PLL0FRAN}{2^{13}}\right) \quad (6\text{-}1)$$

Otherwise, the PLLx is in integer mode, for example:

$$CK_PLL0VCO = CK_PLL0VCOSRC * PLL0N \quad (6\text{-}2)$$

The PLL0 can be switched on or off by using the PLL0EN bit in the RCU_CTL Register. The PLL0STB flag in the RCU_CTL register will indicate if the PLL0 clock is stable. An interrupt can be generated if the related interrupt enable bit, PLL0STBIE, in the RCU_INT register, is set as the PLL0 becomes stable.

The PLL1 can be switched on or off by using the PLL1EN bit in the RCU_CTL register. The PLL1STB flag in the RCU_CTL register will indicate if the PLL1 clock is stable. An interrupt can be generated if the related interrupt enable bit, PLL1STBIE, in the RCU_INT register, is set as the PLL1 becomes stable.

The PLL2 can be switched on or off by using the PLL2EN bit in the RCU_CTL register. The PLL2STB flag in the RCU_CTL register will indicate if the PLL2 clock is stable. An interrupt can be generated if the related interrupt enable bit, PLL2STBIE, in the RCU_INT register, is set as the PLL2 becomes stable.

The PLLUSBHS0 can be switched on or off by using the PLLUSBHS0EN bit in the RCU_ADDCTL1 register. The PLLUSBHS0STB flag in the RCU_ADDCTL1 register will indicate if the PLLUSBHS0 clock is stable. An interrupt can be generated if the related interrupt enable bit, PLLUSBHS0STBIE, in the RCU_ADDINT register, is set as the PLLUSBHS0 becomes stable.

The PLLUSBHS1 can be switched on or off by using the PLLUSBHS1EN bit in the RCU_ADDCTL1 register. The PLLUSBHS1STB flag in the RCU_ADDCTL1 register will indicate if the PLLUSBHS1 clock is stable. An interrupt can be generated if the related interrupt enable bit, PLLUSBHS1STBIE, in the RCU_ADDINT register, is set as the PLLUSBHS1 becomes stable.

The five PLLs are closed by hardware when entering the Deepsleep / Standby mode or HXTAL monitor fail when HXTAL used as the source clock of the PLLs.

Peripheral clock switch dynamically

If the peripheral has two more source clock selection, the peripheral can switches from the running clock to another present clock dynamically. Otherwise, peripheral clock can not be switched. Only TRNG / USART / I2C / SPI / RSPDIF / SAI / SDIO / EXMC / CAN / HPDF peripherals support clock switch dynamically.

System clock (CK_SYS) selection

After the system reset, the default CK_SYS source will be IRC64M and can be switched to HXTAL or LPIRC4M or CK_PLL0P by changing the system clock switch bits, SCS, in the clock configuration register 0, RCU_CFG0. When the SCS value is changed, the CK_SYS will continue to operate using the original clock source until the target clock source is stable. When a clock source is directly or indirectly (by PLL0P) used as the CK_SYS, it is not possible to stop it.

HXTAL clock monitor (CKM)

The HXTAL clock monitor function is enabled by the HXTAL clock monitor enable bit, CKMEN, in the control register (RCU_CTL). This function should be enabled after the HXTAL start-up delay and disabled when the HXTAL is stopped. Once the HXTAL failure is detected, the HXTAL will be automatically disabled. The HXTAL clock stuck interrupt flag, CKMIF, in the clock interrupt register, RCU_INT, will be set and the HXTAL failure event will be generated. This failure interrupt is connected to the Non-Maskable Interrupt, NMI, of the Cortex®-M7. If the HXTAL is selected as the clock source of CK_SYS or PLL0 and CK_PLL0P used as system clock, the HXTAL failure will force the CK_SYS source to IRC64M and the PLL0 will be disabled automatically. If the HXTAL is selected as the clock source of any PLLs, the HXTAL failure will force the PLL closed automatically.

LXTAL clock monitor (LCKM)

A clock monitor on LXTAL can be activated by software writing the LCKMEN bit in the backup domain control register (RCU_BDCTL). LCKMEN can not be enabled before LXTAL is enabled and ready.

The clock monitor on LXTAL is working in all modes except V_{BAT}. If a failure is detected on the external 32 kHz oscillator, an interrupt can be sent to CPU.

The software must then disable the LCKMEN bit, stop the defective 32 kHz oscillator, and change the RTC clock source, or take any required action to secure the application.

A 4-bits plus one counter will work at IRC32K domain when LCKMD enable. If the LXTAL clock has stuck at 0/1 error or slow down about 20KHz, the counter will overflow. The LXTAL clock failure will been found. Once the LXTAL failure is detected, the LXTAL clock stuck interrupt flag, LCKMIF, in the clock interrupt register, RCU_INT, will be set and the LXTAL failure event will be generated.

Clock output capability

The clock output capability is ranging from 32 kHz to 600 MHz. There are several clock signals can be selected via the CK_OUT0 clock source selection bits, CKOUT0SEL, in the Clock configuration register 2 (RCU_CFG2). The corresponding GPIO pin should be configured in the properly alternate function I/O (AFIO) mode to output the selected clock signal. The CK_OUT1 is seleced by CKOUT1SEL, in the clock configuration register 2 (RCU_CFG2).

Table 6-1. Clock output 0 source select

Clock Source 0 Selection bits	Clock Source
000	CK_IRC64MDIV
001	CK_LXTAL
010	CK_HXTAL
011	CK_PLL0P
100	CK_IRC48M
101	CK_PER
110	USBHS0 60M
111	USBHS1 60M

Table 6-2. Clock output 1 source select

Clock Source 1 Selection bits	Clock Source
000	CK_SYS
001	CK_PLL1R
010	CK_HXTAL
011	CK_PLL0P
100	CK_LPIRC4M
101	CK_IRC32K
110	CK_PLL2R

The CK_OUT0 frequency can be reduced by a configurable binary divider, controlled by the CKOUT0DIV bits, in the clock cnfiguration register (RCU_CFG2).

The CK_OUT1 frequency can be reduced by a configurable binary divider, controlled by the CKOUT1DIV bits, in the clock configuration register (RCU_CFG2).

RTC clock measure

The three clock source of RTC clock, LXTAL, IRC32K, HXTAL divided by 2 to 63 (defined by RTCDIV bits in RCU_CFG0), can be measured by TIMER. Then the user can get the clocks frequency, and adjust the RTC and FWDGT counter. Please refer to TIMER15_CI0_SEL bits and TIMER16_CI0_SEL bits ***SYSCFG_TIMERCISEL6*** regiser for detail.

6.3. Register definition

RCU base address: 0x5802 4400

6.3.1. Control register (RCU_CTL)

Address offset: 0x00

Reset value: 0xC000 8040

This register can be accessed by byte (8-bit), half-word (16-bit) and word (32-bit).

31	30	29	28	27	26	25	24	23	22	21	20	19	18	17	16
IRC64MSTB	IRC64MEN	PLL2STB	PLL2EN	PLL1STB	PLL1EN	PLL0STB	PLL0EN	Reserved				CKMEN	HXTALBPS	HXTALSTB	HXTALEN
r	rw	r	rw	r	rw	r	rw					rw	rw	r	rw
15	14	13	12	11	10	9	8	7	6	5	4	3	2	1	0
IRC64MCALIB[8:0]								IRC64MADJ[6:0]							
r								rw							

Bits	Fields	Descriptions
31	IRC64MSTB	IRC64M internal 64MHz RC oscillator stabilization flag Set by hardware to indicate if the IRC64M oscillator is stable and ready for use. 0: IRC64M oscillator is not stable 1: IRC64M oscillator is stable
30	IRC64MEN	Internal 64MHz RC oscillator enable Set and reset by software. This bit cannot be reset if the IRC64M clock is used as the system clock. Set by hardware when leaving Deep-sleep or Standby mode or the HXTAL clock is stuck at a low or high state when CKMEN is set. 0: Internal 64 MHz RC oscillator disabled 1: Internal 64 MHz RC oscillator enabled
29	PLL2STB	PLL2 clock stabilization flag Set by hardware to indicate if the PLL2 output clock is stable and ready for use. 0: PLL2 is not stable 1: PLL2 is stable
28	PLL2EN	PLL2 enable Set and reset by software. Reset by hardware when entering Deep-sleep or Standby mode. 0: PLL2 is switched off 1: PLL2 is switched on
27	PLL1STB	PLL1 clock stabilization flag Set by hardware to indicate if the PLL1 output clock is stable and ready for use. 0: PLL1 is not stable

		1: PLL1 is stable
26	PLL1EN	PLL1 enable Set and reset by software. Reset by hardware when entering Deep-sleep or Standby mode. 0: PLL1 is switched off 1: PLL1 is switched on
25	PLL0STB	PLL0 clock stabilization flag Set by hardware to indicate if the PLL0 output clock is stable and ready for use. 0: PLL0 is not stable 1: PLL0 is stable
24	PLL0EN	PLL0 enable Set and reset by software. This bit cannot be reset if the PLL0 clock is used as the system clock. Reset by hardware when entering Deep-sleep or Standby mode. 0: PLL0 is switched off 1: PLL0 is switched on
23:20	Reserved	Must be kept at reset value.
19	CKMEN	HXTAL clock monitor enable 0: Disable the High speed 4 ~ 50 MHz crystal oscillator (HXTAL) clock monitor 1: Enable the High speed 4 ~ 50 MHz crystal oscillator (HXTAL) clock monitor When the hardware detects that the HXTAL clock is stuck at a low or high state, the internal hardware will switch the system clock to be the internal high speed IRC64M RC clock. The way to recover the original system clock is by either an external reset, power on reset or clearing CKMIF by software. **Note:** When the HXTAL clock monitor is enabled, the hardware will automatically enable the IRC64M internal RC oscillator regardless of the control bit, IRC64MEN, state.
18	HXTALBPS	High speed crystal oscillator (HXTAL) clock bypass mode enable The HXTALBPS bit can be written only if the HXTALEN is 0. 0: Disable the HXTAL Bypass mode 1: Enable the HXTAL Bypass mode in which the HXTAL output clock is equal to the input clock.
17	HXTALSTB	High speed crystal oscillator (HXTAL) clock stabilization flag Set by hardware to indicate if the HXTAL oscillator is stable and ready for use. 0: HXTAL oscillator is not stable 1: HXTAL oscillator is stable
16	HXTALEN	High speed crystal oscillator (HXTAL) enable Set and reset by software. This bit cannot be reset if the HXTAL clock is used as the system clock or the PLL0 input clock when PLL0P clock is selected to the system clock. Reset by hardware when entering Deep-sleep or Standby mode. 0: High speed 4 ~ 50 MHz crystal oscillator disabled

		1: High speed 4 ~ 50 MHz crystal oscillator enabled
15:7	IRC64MCALIB[8:0]	Internal 64MHz RC Oscillator calibration value These bits are load automatically at power on.
6:0	IRC64MADJ[6:0]	Internal 64MHz RC Oscillator clock trim adjust value These bits are set by software. The trimming value is these bits IRC64MADJ[6:0] added to the IRC64MCALIB[8:0] bits. The trimming value should trim the IRC64M to 64 MHz ± 1%.

6.3.2. PLL0 register (RCU_PLL0)

Address offset: 0x04

Reset value: 0x0100 2020

To configure the PLL0 clock, refer to the following formula:

CK_PLL0VCOSRC = CK_PLL0SRC / PLL0PSC

CK_PLL0VCO = CK_PLL0VCOSRC × (PLL0N + PLL0FRAN / 2^{13})

CK_PLL0R = CK_PLL0VCO / PLL0R

CK_PLL0P = CK_PLL0VCO / PLL0P

This register can be accessed by byte (8-bit), half-word (16-bit) and word (32-bit).

31	30	29	28	27	26	25	24	23	22	21	20	19	18	17	16
PLLSTBSRC	PLL0R[6:0]							Reserved	PLL0P[6:0]						
w	rw								rw						

15	14	13	12	11	10	9	8	7	6	5	4	3	2	1	0
Reserved	PLL0N[8:0]									PLL0PSC[5:0]					
	rw									rw					

Bits	Fields	Descriptions
31	PLLSTBSRC	PLLs stabilization signal sources. 0: Analog logic 1: Digital logic
30:24	PLL0R[6:0]	The PLL0R output frequency division factor from PLL0 VCO clock Set and reset by software when the PLL0 is disable. These bits used to generator PLL0R output clock (CK_PLL0R) from PLL0 VCO clock (CK_PLL0VCO). The CK_PLL0VCO is described in PLL0N bits in RCU_PLL0 register. 0000000: CK_PLL0R = CK_PLL0VCO 0000001: CK_PLL0R = CK_PLL0VCO / 2 0000010: CK_PLL0R = CK_PLL0VCO / 3. 0000011: CK_PLL0R = CK_PLL0VCO / 4 0000100: CK_PLL0R = CK_PLL0VCO / 5 … 1111111: CK_PLL0R = CK_PLL0VCO / 128

23	Reserved	Must be kept at reset value.
22:16	PLL0P[6:0]	The PLL0P output frequency division factor from PLL0 VCO clock Set and reset by software when the PLL0 is disable. These bits used to generator PLL0P output clock (CK_PLL0P) from PLL0 VCO clock (CK_PLL0VCO). The CK_PLL0P is used to system clock (no more than 600MHz). The CK_PLL0VCO is described in PLL0N bits in RCU_PLL0 register. 0000000: CK_PLL0P = CK_PLL0VCO 0000001: CK_PLL0P = CK_PLL0VCO / 2 0000010: CK_PLL0P = CK_PLL0VCO / 3 0000011: CK_PLL0P = CK_PLL0VCO / 4 0000100: CK_PLL0P = CK_PLL0VCO / 5 … 1111111: CK_PLL0P = CK_PLL0VCO / 128
15	Reserved	Must be kept at reset value.
14:6	PLL0N[8:0]	The PLL0 VCO clock multiplication factor Set and reset by software (only use word / half-word write) when the PLL0 is disable. These bits used to generator PLL0 VCO clock (CK_PLL0VCO) from PLL0 VCO source clock (CK_PLL0VCOSRC). The CK_PLL0VCOSRC is described in PLL0PSC bits in RCU_PLL0 register. **Note:** The frequency of CK_PLL0VCO is between 150MHz to 836MHz The value of PLL0N must : 9≤PLL0N≤512 000000000: Reserved … 000000111: Reserved 000001000: PLL0N = 9 … 001000000: PLL0N = 65 001000001: PLL0N = 66 … 111111111: PLL0N = 512
5:0	PLL0PSC[5:0]	The PLL0 VCO source clock prescaler Set and reset by software when the PLL0 is disable. These bits used to generate the clock of PLL0 VCO source clock (CK_PLL0VCOSRC) from PLL0 source clock (CK_PLL0SRC) which described in PLLSEL in RCU_PLLALL register. The VCO source clock is between 1M to 16MHz 000000: reserved 000001: CK_PLL0SRC 000010: CK_PLL0SRC / 2 000011: CK_PLL0SRC / 3 …

111111: CK_PLL0SRC / 63

6.3.3. Clock configuration register 0 (RCU_CFG0)

Address offset: 0x08

Reset value: 0x0000 0000

This register can be accessed by byte (8-bit), half-word (16-bit) and word (32-bit).

31	30	29	28	27	26	25	24	23	22	21	20	19	18	17	16
I2C0SEL[1:0]		APB3PSC[2:0]			APB4PSC[2:0]			Reserved		RTCDIV[5:0]					
rw		rw			rw					rw					

15	14	13	12	11	10	9	8	7	6	5	4	3	2	1	0
APB2PSC[2:0]			APB1PSC[2:0]			Reserved		AHBPSC[3:0]				SCSS[1:0]		SCS[1:0]	
rw			rw					rw				r		rw	

Bits	Fields	Descriptions
31:30	I2C0SEL[1:0]	I2C0 clock source selection Set and reset by software to control the I2C0 clock source. 00: CK_APB1 selected as I2C0 source clock 01: CK_PLL2R selected as I2C0 source clock 10: CK_IRC64MDIV selected as I2C0 source clock 11: CK_LPIRC4M selected as I2C0 source clock
29:27	APB3PSC[2:0]	APB3 prescaler selection Set and reset by software to control the APB3 clock division ratio. 0xx: CK_AHB selected 100: (CK_AHB / 2) selected 101: (CK_AHB / 4) selected 110: (CK_AHB / 8) selected 111: (CK_AHB / 16) selected
26:24	APB4PSC[2:0]	APB4 prescaler selection Set and reset by software to control the APB4 clock division ratio. 0xx: CK_AHB selected 100: (CK_AHB / 2) selected 101: (CK_AHB / 4) selected 110: (CK_AHB / 8) selected 111: (CK_AHB / 16) selected
23:22	Reserved	Must be kept at reset value.
21:16	RTCDIV[5:0]	RTC clock divider factor Set and reset by software. These bits is used to generator clock for RTC (no more than 1MHz) from HXTAL clock. 000000: no clock for RTC 000001: no clock for RTC

		000010: CK_HXTAL / 2 000011: CK_HXTAL / 3 … 111111: CK_HXTAL / 63
15:13	APB2PSC[2:0]	APB2 prescaler selection Set and reset by software to control the APB2 clock division ratio. 0xx: CK_AHB selected 100: (CK_AHB / 2) selected 101: (CK_AHB / 4) selected 110: (CK_AHB / 8) selected 111: (CK_AHB / 16) selected
12:10	APB1PSC[2:0]	APB1 prescaler selection Set and reset by software to control the APB1 clock division ratio. 0xx: CK_AHB selected 100: (CK_AHB / 2) selected 101: (CK_AHB / 4) selected 110: (CK_AHB / 8) selected 111: (CK_AHB / 16) selected
9:8	Reserved	Must be kept at reset value.
7:4	AHBPSC[3:0]	AHB and AXI prescaler selection Set and reset by software to control the AHB and AXI clock division ratio 0xxx: CK_SYS selected 1000: (CK_SYS / 2) selected 1001: (CK_SYS / 4) selected 1010: (CK_SYS / 8) selected 1011: (CK_SYS / 16) selected 1100: (CK_SYS / 64) selected 1101: (CK_SYS / 128) selected 1110: (CK_SYS / 256) selected 1111: (CK_SYS / 512) selected
3:2	SCSS[1:0]	System clock switch status Set and reset by hardware to indicate the clock source of system clock. 00: Select CK_IRC64MDIV as the CK_SYS source 01: Select CK_HXTAL as the CK_SYS source 10: Select CK_LPIRC4M as the CK_SYS source 11: Select CK_PLL0P as the CK_SYS source
1:0	SCS[1:0]	System clock switch Set by software to select the CK_SYS source. Because the change of CK_SYS has inherent latency, software should read SCSS to confirm whether the switching is complete or not. The switch will be forced to IRC64MDIV when leaving Deep-sleep and Standby mode or HXTAL failure is detected by HXTAL clock monitor when

HXTAL is selected directly or indirectly as the clock source of CK_SYS.

00: Select CK_IRC64MDIV as the CK_SYS source

01: Select CK_HXTAL as the CK_SYS source

10: Select CK_LPIRC4M as the CK_SYS source

11: Select CK_PLL0P as the CK_SYS source

6.3.4. Clock interrupt register (RCU_INT)

Address offset: 0x0C

Reset value: 0x0000 0000

This register can be accessed by byte (8-bit), half-word (16-bit) and word (32-bit).

31	30	29	28	27	26	25	24	23	22	21	20	19	18	17	16
Reserved			LCKMIC	LCKMIF	LPIRC4M STBIC	LPIRC4M STBIE	LPIRC4M STBIF	CKMIC	PLL2 STBIC	PLL1 STBIC	PLL0 STBIC	HXTAL STBIC	IRC64MS TBIC	LXTAL STBIC	IRC32K STBIC
			w	r	w	rw	r	w	w	w	w	w	w	w	w

15	14	13	12	11	10	9	8	7	6	5	4	3	2	1	0
Reserved	PLL2 STBIE	PLL1 STBIE	PLL0 STBIE	HXTAL STBIE	IRC64MS TBIE	LXTAL STBIE	IRC32K STBIE	CKMIF	PLL2 STBIF	PLL1 STBIF	PLL0 STBIF	HXTAL STBIF	IRC64MS TBIF	LXTAL STBIF	IRC32K STBIF
	rw	rw	rw	rw	rw	rw	rw	r	r	r	r	r	r	r	r

Bits	Fields	Descriptions
31:29	Reserved	Must be kept at reset value.
28	LCKMIC	LXTAL clock stuck interrupt clear Write 1 by software to reset the LCKMIF flag. 0: Not reset LCKMIF flag 1: Reset LCKMIF flag
27	LCKMIF	LXTAL clock stuck interrupt flag Set by hardware when the LXTAL clock is stuck. Reset when setting the LCKMIC bit by software. 0: Clock operating normally 1: LXTAL clock stuck
26	LPIRC4MSTBIC	LPIRC4M stabilization interrupt clear Write 1 by software to reset the LPIRC4MSTBIF flag. 0: Not reset LPIRC4MSTBIF flag 1: Reset LPIRC4MSTBIF flag
25	LPIRC4MSTBIE	LPIRC4M stabilization interrupt enable Set and reset by software to enable/disable the LPIRC4M stabilization interrupt. 0: Disable the LPIRC4M stabilization interrupt 1: Enable the LPIRC4M stabilization interrupt
24	LPIRC4MSTBIF	LPIRC4M Clock Stuck Interrupt Flag

		Set by hardware when the LPIRC4M clock is stuck. Reset when setting the LPIRC4MSTBIC bit by software. 0: Clock operating normally 1: LPIRC4M clock stuck
23	CKMIC	HXTAL clock stuck interrupt clear Write 1 by software to reset the CKMIF flag. 0: Not reset CKMIF flag 1: Reset CKMIF flag
22	PLL2STBIC	PLL2 stabilization interrupt clear Write 1 by software to reset the PLL2STBIF flag. 0: Not reset PLL2STBIF flag 1: Reset PLL2STBIF flag
21	PLL1STBIC	PLL1 stabilization interrupt clear Write 1 by software to reset the PLL1STBIF flag. 0: Not reset PLL1STBIF flag 1: Reset PLL1STBIF flag
20	PLL0STBIC	PLL0 stabilization interrupt clear Write 1 by software to reset the PLL0STBIF flag. 0: Not reset PLL0STBIF flag 1: Reset PLL0STBIF flag
19	HXTALSTBIC	HXTAL stabilization interrupt clear Write 1 by software to reset the HXTALSTBIF flag. 0: Not reset HXTALSTBIF flag 1: Reset HXTALSTBIF flag
18	IRC64MSTBIC	IRC64M stabilization interrupt clear Write 1 by software to reset the IRC64MSTBIF flag. 0: Not reset IRC64MSTBIF flag 1: Reset IRC64MSTBIF flag
17	LXTALSTBIC	LXTAL stabilization interrupt clear Write 1 by software to reset the LXTALSTBIF flag. 0: Not reset LXTALSTBIF flag 1: Reset LXTALSTBIF flag
16	IRC32KSTBIC	IRC32K stabilization interrupt clear Write 1 by software to reset the IRC32KSTBIF flag. 0: Not reset IRC32KSTBIF flag 1: Reset IRC32KSTBIF flag
15	Reserved	Must be kept at reset value.
14	PLL2STBIE	PLL2 stabilization interrupt enable Set and reset by software to enable/disable the PLL2 stabilization interrupt.

		0: Disable the PLL2 stabilization interrupt 1: Enable the PLL2 stabilization interrupt
13	PLL1STBIE	PLL1 stabilization interrupt enable Set and reset by software to enable/disable the PLL1 stabilization interrupt. 0: Disable the PLL1 stabilization interrupt 1: Enable the PLL1 stabilization interrupt
12	PLL0STBIE	PLL0 stabilization interrupt enable Set and reset by software to enable/disable the PLL0 stabilization interrupt. 0: Disable the PLL0 stabilization interrupt 1: Enable the PLL0 stabilization interrupt
11	HXTALSTBIE	HXTAL stabilization interrupt enable Set and reset by software to enable/disable the HXTAL stabilization interrupt 0: Disable the HXTAL stabilization interrupt 1: Enable the HXTAL stabilization interrupt
10	IRC64MSTBIE	IRC64M stabilization interrupt enable Set and reset by software to enable/disable the IRC64M stabilization interrupt 0: Disable the IRC64M stabilization interrupt 1: Enable the IRC64M stabilization interrupt
9	LXTALSTBIE	LXTAL stabilization interrupt enable LXTAL stabilization interrupt enable/disable control 0: Disable the LXTAL stabilization interrupt 1: Enable the LXTAL stabilization interrupt
8	IRC32KSTBIE	IRC32K stabilization interrupt enable IRC32K stabilization interrupt enable/disable control 0: Disable the IRC32K stabilization interrupt 1: Enable the IRC32K stabilization interrupt
7	CKMIF	HXTAL clock stuck interrupt flag Set by hardware when the HXTAL clock is stuck. Reset when setting the CKMIC bit by software. 0: Clock operating normally 1: HXTAL clock stuck
6	PLL2STBIF	PLL2 stabilization interrupt flag Set by hardware when the PLL2 is stable and the PLL2STBIE bit is set. Reset when setting the PLL2STBIC bit by software. 0: No PLL2 stabilization interrupt generated 1: PLL2 stabilization interrupt generated
5	PLL1STBIF	PLL1 stabilization interrupt flag Set by hardware when the PLL1 is stable and the PLL1STBIE bit is set. Reset when setting the PLL1STBIC bit by software.

		0: No PLL1 stabilization interrupt generated 1: PLL1 stabilization interrupt generated
4	PLL0STBIF	PLL0 stabilization interrupt flag Set by hardware when the PLL0 is stable and the PLL0STBIE bit is set. Reset when setting the PLL0STBIC bit by software. 0: No PLL0 stabilization interrupt generated 1: PLL0 stabilization interrupt generated
3	HXTALSTBIF	HXTAL stabilization interrupt flag Set by hardware when the High speed 4 ~ 50 MHz crystal oscillator clock is stable and the HXTALSTBIE bit is set. Reset when setting the HXTALSTBIC bit by software. 0: No HXTAL stabilization interrupt generated 1: HXTAL stabilization interrupt generated
2	IRC64MSTBIF	IRC64M stabilization interrupt flag Set by hardware when the Internal 64 MHz RC oscillator clock is stable and the IRC64MSTBIE bit is set. Reset when setting the IRC64MSTBIC bit by software. 0: No IRC64M stabilization interrupt generated 1: IRC64M stabilization interrupt generated
1	LXTALSTBIF	LXTAL stabilization interrupt flag Set by hardware when the Low speed 32,768 Hz crystal oscillator clock is stable and the LXTALSTBIE bit is set. Reset when setting the LXTALSTBIC bit by software. 0: No LXTAL stabilization interrupt generated 1: LXTAL stabilization interrupt generated
0	IRC32KSTBIF	IRC32K stabilization interrupt flag Set by hardware when the Internal 32kHz RC oscillator clock is stable and the IRC32KSTBIE bit is set. Reset when setting the IRC32KSTBIC bit by software. 0: No IRC32K stabilization clock ready interrupt generated 1: IRC32K stabilization interrupt generated

6.3.5. AHB1 reset register (RCU_AHB1RST)

Address offset: 0x10

Reset value: 0x0000 0000

This register can be accessed by byte (8-bit), half-word (16-bit) and word (32-bit).

31	30	29	28	27	26	25	24	23	22	21	20	19	18	17	16
Reserved		USBHS1RST	Reserved			ENET0RST	Reserved	DMAMUXRST	DMA1RST	DMA0RST	Reserved				

		rw				rw		rw	rw	rw					
15	14	13	12	11	10	9	8	7	6	5	4	3	2	1	0
Reserved	USBHS0RST	Reserved													ENET1RST
	rw														rw

Bits	Fields	Descriptions
31:30	Reserved	Must be kept at reset value.
29	USBHS1RST	USBHS1 reset This bit is set and reset by software. 0: No reset 1: Reset the USBHS1
28:26	Reserved	Must be kept at reset value.
25	ENET0RST	Ethernet0 reset This bit is set and reset by software. 0: No reset 1: Reset the Ethernet0
24	Reserved	Must be kept at reset value.
23	DMAMUXRST	DMAMUX reset This bit is set and reset by software. 0: No reset 1: Reset the DMAMUX
22	DMA1RST	DMA1 reset This bit is set and reset by software. 0: No reset 1: Reset the DMA1
21	DMA0RST	DMA0 reset This bit is set and reset by software. 0: No reset 1: Reset the DMA0
20:15	Reserved	Must be kept at reset value.
14	USBHS0RST	USBHS0 reset This bit is set and reset by software. 0: No reset 1: Reset the USBHS0
13:1	Reserved	Must be kept at reset value.
0	ENET1RST	Ethernet1 reset This bit is set and reset by software.

0: No reset

1: Reset the Ethernet1

6.3.6. AHB2 reset register (RCU_AHB2RST)

Address offset: 0x14

Reset value: 0x0000 0000

This register can be accessed by byte (8-bit), half-word (16-bit) and word (32-bit).

31	30	29	28	27	26	25	24	23	22	21	20	19	18	17	16
Reserved															

15	14	13	12	11	10	9	8	7	6	5	4	3	2	1	0
Reserved								TMURST	TRNGRST	Reserved	HAURST	CAURST	SDIO1RST	FACRST	DCIRST
								rw	rw		rw	rw	rw	rw	rw

Bits	Fields	Descriptions
31:8	Reserved	Must be kept at reset value.
7	TMURST	TMU reset This bit is set and reset by software. 0: No reset 1: Reset the TMU
6	TRNGRST	TRNG reset This bit is set and reset by software. 0: No reset 1: Reset the TRNG
5	Reserved	Must be kept at reset value.
4	HAURST	HAU reset This bit is set and reset by software. 0: No reset 1: Reset the HAU
3	CAURST	CAU reset This bit is set and reset by software. 0: No reset 1: Reset the CAU
2	SDIO1RST	SDIO1 reset This bit is set and reset by software. 0: No reset 1: Reset the SDIO1

1	FACRST	FAC reset This bit is set and reset by software. 0: No reset 1: Reset the FAC
0	DCIRST	DCI reset This bit is set and reset by software. 0: No reset 1: Reset the DCI

6.3.7. AHB3 reset register (RCU_AHB3RST)

Address offset: 0x18

Reset value: 0x0000 0000

This register can be accessed by byte (8-bit), half-word (16-bit) and word (32-bit).

31	30	29	28	27	26	25	24	23	22	21	20	19	18	17	16
Reserved															

15	14	13	12	11	10	9	8	7	6	5	4	3	2	1	0
Reserved						RTDEC1RST	RTDEC0RST	Reserved	OSPI1RST	OSPI0RST	OSPIMRST	MDMARST	SDIO0RST	IPARST	EXMCRST
						rw	rw		rw	rw	rw	rw	rw	rw	rw

Bits	Fields	Descriptions
31:10	Reserved	Must be kept at reset value.
9	RTDEC1RST	RTDEC1 reset This bit is set and reset by software. 0: No reset 1: Reset the RTDEC1
8	RTDEC0RST	RTDEC0 reset This bit is set and reset by software. 0: No reset 1: Reset the RTDEC0
7	Reserved	Must be kept at reset value.
6	OSPI1RST	OSPI1 reset This bit is set and reset by software. 0: No reset 1: Reset the OSPI1
5	OSPI0RST	OSPI0 reset This bit is set and reset by software. 0: No reset

		1: Reset the OSPI0
4	OSPIMRST	OSPIM reset This bit is set and reset by software. 0: No reset 1: Reset the OSPIM
3	MDMARST	MDMA reset This bit is set and reset by software. 0: No reset 1: Reset the MDMA
2	SDIO0RST	SDIO0 reset This bit is set and reset by software. 0: No reset 1: Reset the SDIO0
1	IPARST	IPA reset This bit is set and reset by software. 0: No reset 1: Reset the IPA
0	EXMCRST	EXMC reset This bit is set and reset by software. 0: No reset 1: Reset the EXMC

6.3.8. AHB4 reset register (RCU_AHB4RST)

Address offset: 0x1C

Reset value: 0x0000 0000

This register can be accessed by byte (8-bit), half-word (16-bit) and word (32-bit).

31	30	29	28	27	26	25	24	23	22	21	20	19	18	17	16
Reserved															

15	14	13	12	11	10	9	8	7	6	5	4	3	2	1	0
HWSEMRST	CRCRST	Reserved				PKRST	PJRST	PHRST	PGRST	PFRST	PERST	PDRST	PCRST	PBRST	PARST
rw	rw					rw	rw	rw	rw	rw	rw	rw	rw	rw	rw

Bits	Fields	Descriptions
31:16	Reserved	Must be kept at reset value.
15	HWSEMRST	HWSEM reset This bit is set and reset by software. 0: No reset

		1: Reset the HWSEM
14	CRCRST	CRC reset This bit is set and reset by software. 0: No reset 1: Reset the CRC
13:10	Reserved	Must be kept at reset value.
9	PKRST	GPIO port K reset This bit is set and reset by software. 0: No reset 1: Reset the GPIO port K
8	PJRST	GPIO port J reset This bit is set and reset by software. 0: No reset 1: Reset the GPIO port J
7	PHRST	GPIO port H reset This bit is set and reset by software. 0: No reset 1: Reset the GPIO port H
6	PGRST	GPIO port G reset This bit is set and reset by software. 0: No reset 1: Reset the GPIO port G
5	PFRST	GPIO port F reset This bit is set and reset by software. 0: No reset 1: Reset the GPIO port F
4	PERST	GPIO port E reset This bit is set and reset by software. 0: No reset 1: Reset the GPIO port E
3	PDRST	GPIO port D reset This bit is set and reset by software. 0: No reset 1: Reset the GPIO port D
2	PCRST	GPIO port C reset This bit is set and reset by software. 0: No reset 1: Reset the GPIO port C

1	PBRST	GPIO port B reset This bit is set and reset by software. 0: No reset 1: Reset the GPIO port B
0	PARST	GPIO port A reset This bit is set and reset by software. 0: No reset 1: Reset the GPIO port A

6.3.9. APB1 reset register (RCU_APB1RST)

Address offset: 0x20

Reset value: 0x0000 0000

This register can be accessed by byte (8-bit), half-word (16-bit) and word (32-bit).

31	30	29	28	27	26	25	24	23	22	21	20	19	18	17	16
UART7RST	UART6RST	DACRST	DACHOLDRST	CTCRST	Reserved		I2C3RST	I2C2RST	I2C1RST	I2C0RST	UART4RST	UART3RST	USART2RST	USART1RST	MDIORST
rw	rw	rw	rw	rw			rw	rw	rw	rw	rw	rw	rw	rw	rw

15	14	13	12	11	10	9	8	7	6	5	4	3	2	1	0
SPI2RST	SPI1RST	RSPDIFRST	Reserved	TIMER51RST	TIMER50RST	TIMER31RST	TIMER30RST	TIMER23RST	TIMER22RST	TIMER6RST	TIMER5RST	TIMER4RST	TIMER3RST	TIMER2RST	TIMER1RST
rw	rw	rw		rw	rw	rw	rw	rw	rw	rw	rw	rw	rw	rw	rw

Bits	Fields	Descriptions
31	UART7RST	UART7 reset This bit is set and reset by software. 0: No reset 1: Reset the UART7
30	UART6RST	UART6 reset This bit is set and reset by software. 0: No reset 1: Reset the UART6
29	DACRST	DAC reset This bit is set and reset by software. 0: No reset 1: Reset the DAC
28	DACHOLDRST	DAC hold clock reset This bit is set and reset by software. The hold clock source is IRC32K. 0: No reset 1: Reset the hold clock

27	CTCRST	CTC reset This bit is set and reset by software. 0: No reset 1: Reset the CTC
26:25	Reserved	Must be kept at reset value.
24	I2C3RST	I2C3 reset This bit is set and reset by software. 0: No reset 1: Reset the I2C3
23	I2C2RST	I2C2 reset This bit is set and reset by software. 0: No reset 1: Reset the I2C2
22	I2C1RST	I2C1 reset This bit is set and reset by software. 0: No reset 1: Reset the I2C1
21	I2C0RST	I2C0 reset This bit is set and reset by software. 0: No reset 1: Reset the I2C0
20	UART4RST	UART4 reset This bit is set and reset by software. 0: No reset 1: Reset the UART4
19	UART3RST	UART3 reset This bit is set and reset by software. 0: No reset 1: Reset the UART3
18	USART2RST	USART2 reset This bit is set and reset by software. 0: No reset 1: Reset the USART2
17	USART1RST	USART1 reset This bit is set and reset by software. 0: No reset 1: Reset the USART1
16	MDIORST	MDIO reset This bit is set and reset by software.

		0: No reset 1: Reset the MDIO
15	SPI2RST	SPI2 reset This bit is set and reset by software. 0: No reset 1: Reset the SPI2
14	SPI1RST	SPI1 reset This bit is set and reset by software. 0: No reset 1: Reset the SPI1
13	RSPDIFRST	RSPDIF reset This bit is set and reset by software. 0: No reset 1: Reset the RSPDIF
12	Reserved	Must be kept at reset value.
11	TIMER51RST	TIMER51 reset This bit is set and reset by software. 0: No reset 1: Reset the TIMER51
10	TIMER50RST	TIMER50 reset This bit is set and reset by software. 0: No reset 1: Reset the TIMER50
9	TIMER31RST	TIMER31 reset This bit is set and reset by software. 0: No reset 1: Reset the TIMER31
8	TIMER30RST	TIMER30 reset This bit is set and reset by software. 0: No reset 1: Reset the TIMER30
7	TIMER23RST	TIMER23 reset This bit is set and reset by software. 0: No reset 1: Reset the TIMER23
6	TIMER22RST	TIMER22 reset This bit is set and reset by software. 0: No reset

		1: Reset the TIMER22
5	TIMER6RST	TIMER6 reset This bit is set and reset by software. 0: No reset 1: Reset the TIMER6
4	TIMER5RST	TIMER5 reset This bit is set and reset by software. 0: No reset 1: Reset the TIMER5
3	TIMER4RST	TIMER4 reset This bit is set and reset by software. 0: No reset 1: Reset the TIMER4
2	TIMER3RST	TIMER3 reset This bit is set and reset by software. 0: No reset 1: Reset the TIMER3
1	TIMER2RST	TIMER2 reset This bit is set and reset by software. 0: No reset 1: Reset the TIMER2
0	TIMER1RST	TIMER1 reset This bit is set and reset by software. 0: No reset 1: Reset the TIMER1

6.3.10. APB2 reset register (RCU_APB2RST)

Address offset: 0x24

Reset value: 0x0000 0000

This register can be accessed by byte (8-bit), half-word (16-bit) and word (32-bit).

31	30	29	28	27	26	25	24	23	22	21	20	19	18	17	16
TRIGSELRST	EDOUTRST	TIMER44RST	TIMER43RST	TIMER42RST	TIMER41RST	TIMER40RST	SAI2RST	SAI1RST	SAI0RST	SPI5RST	SPI4RST	HPDFRST	TIMER16RST	TIMER15RST	TIMER14RST
rw	rw	rw	rw	rw	rw	rw	rw	rw	rw	rw	rw	rw	rw	rw	rw

15	14	13	12	11	10	9	8	7	6	5	4	3	2	1	0
Reserved		SPI3RST	SPI0RST	Reserved	ADC2RST	ADC1RST	ADC0RST	Reserved		USART5RST	USART0RST	Reserved		TIMER7RST	TIMER0RST
		rw	rw		rw	rw	rw			rw	rw			rw	rw

Bits	Fields	Descriptions
31	TRIGSELRST	TRIGSEL reset This bit is set and reset by software. 0: No reset 1: Reset the TRIGSEL
30	EDOUTRST	EDOUT reset This bit is set and reset by software. 0: No reset 1: Reset the EDOUT
29	TIMER44RST	TIMER44 reset This bit is set and reset by software. 0: No reset 1: Reset the TIMER44
28	TIMER43RST	TIMER43 reset This bit is set and reset by software. 0: No reset 1: Reset the TIMER43
27	TIMER42RST	TIMER42 reset This bit is set and reset by software. 0: No reset 1: Reset the TIMER42
26	TIMER41RST	TIMER41 reset This bit is set and reset by software. 0: No reset 1: Reset the TIMER41
25	TIMER40RST	TIMER40 reset This bit is set and reset by software. 0: No reset 1: Reset the TIMER40
24	SAI2RST	SAI2 reset This bit is set and reset by software. 0: No reset 1: Reset the SAI2
23	SAI1RST	SAI1 reset This bit is set and reset by software. 0: No reset 1: Reset the SAI1
22	SAI0RST	SAI0 reset This bit is set and reset by software. 0: No reset 1: Reset the SAI0
21	SPI5RST	SPI5 reset This bit is set and reset by software.

		0: No reset 1: Reset the SPI5
20	SPI4RST	SPI4 reset This bit is set and reset by software. 0: No reset 1: Reset the SPI4
19	HPDFRST	HPDF reset This bit is set and reset by software. 0: No reset 1: Reset the HPDF
18	TIMER16RST	TIMER16 reset This bit is set and reset by software. 0: No reset 1: Reset the TIMER16
17	TIMER15RST	TIMER15 reset This bit is set and reset by software. 0: No reset 1: Reset the TIMER15R
16	TIMER14RST	TIMER14 reset This bit is set and reset by software. 0: No reset 1: Reset the TIMER14
15:14	Reserved	Must be kept at reset value.
13	SPI3RST	SPI3 reset This bit is set and reset by software. 0: No reset 1: Reset the SPI3
12	SPI0RST	SPI0 reset This bit is set and reset by software. 0: No reset 1: Reset the SPI0
11	Reserved	Must be kept at reset value.
10	ADC2RST	ADC2 reset This bit is set and reset by software. 0: No reset 1: Reset the all ADC2
9	ADC1RST	ADC1 reset This bit is set and reset by software.

		0: No reset 1: Reset the all ADC1
8	ADC0RST	ADC0 reset This bit is set and reset by software. 0: No reset 1: Reset the all ADC0
7:6	Reserved	Must be kept at reset value.
5	USART5RST	USART5 reset This bit is set and reset by software. 0: No reset 1: Reset the USART5
4	USART0RST	USART0 reset This bit is set and reset by software. 0: No reset 1: Reset the USART0
3:2	Reserved	Must be kept at reset value.
1	TIMER7RST	TIMER7 reset This bit is set and reset by software. 0: No reset 1: Reset the TIMER7
0	TIMER0RST	TIMER0 reset This bit is set and reset by software. 0: No reset 1: Reset the TIMER0

6.3.11. APB3 reset register (RCU_APB3RST)

Address offset: 0x28

Reset value: 0x0000 0000

This register can be accessed by byte (8-bit), half-word (16-bit) and word (32-bit).

31	30	29	28	27	26	25	24	23	22	21	20	19	18	17	16
Reserved															

15	14	13	12	11	10	9	8	7	6	5	4	3	2	1	0
Reserved														WWDGTRST	TLIRST
														rw	rw

Bits	Fields	Descriptions

31:2	Reserved	Must be kept at reset value.
1	WWDGTRST	WWDGT reset This bit is set and reset by software. 0: No reset 1: Reset the WWDGT
0	TLIRST	TLI reset This bit is set and reset by software. 0: No reset 1: Reset the TLI

6.3.12. APB4 reset register (RCU_APB4RST)

Address offset: 0x2C

Reset value: 0x0000 0000

This register can be accessed by byte (8-bit), half-word (16-bit) and word (32-bit).

31	30	29	28	27	26	25	24	23	22	21	20	19	18	17	16
Reserved															

15	14	13	12	11	10	9	8	7	6	5	4	3	2	1	0
Reserved											PMURST	LPDTSRST	VREFRST	CMPRST	SYSCFGRST
											rw	rw	rw	rw	rw

Bits	Fields	Descriptions
31:5	Reserved	Must be kept at reset value.
4	PMURST	PMU reset This bit is set and reset by software. 0: No reset 1: Reset the PMU
3	LPDTSRST	LPDTS reset This bit is set and reset by software. 0: No reset 1: Reset the LPDTS
2	VREFRST	VREF reset This bit is set and reset by software. 0: No reset 1: Reset the VREF
1	CMPRST	CMP reset This bit is set and reset by software. 0: No reset 1: Reset the CMP

0	SYSCFGRST	SYSCFG reset This bit is set and reset by software. 0: No reset 1: Reset the SYSCFG

6.3.13. AHB1 enable register (RCU_AHB1EN)

Address offset: 0x30

Reset value: 0x0000 0000

This register can be accessed by byte (8-bit), half-word (16-bit) and word (32-bit).

31	30	29	28	27	26	25	24	23	22	21	20	19	18	17	16
Reserved	USBHS1ULPIEN	USBHS1EN	ENET0PTPEN	ENET0RXEN	ENET0TXEN	ENET0EN	Reserved	DMAMUXEN	DMA1EN	DMA0EN	Reserved				
	rw	rw	rw	rw	rw	rw		rw	rw	rw					

15	14	13	12	11	10	9	8	7	6	5	4	3	2	1	0
USBHS0ULPIEN	USBHS0EN	Reserved										ENET1PTPEN	ENET1RXEN	ENET1TXEN	ENET1EN
rw	rw											rw	rw	rw	rw

Bits	Fields	Descriptions
31	Reserved	Must be kept at reset value.
30	USBHS1ULPIEN	USBHS1 ULPI clock enable This bit is set and reset by software. 0: Disabled USBHS1 ULPI clock 1: Enabled USBHS1 ULPI clock
29	USBHS1EN	USBHS1 clock enable This bit is set and reset by software. 0: Disabled USBHS1 clock 1: Enabled USBHS1 clock
28	ENET0PTPEN	Ethernet0 PTP clock enable This bit is set and reset by software. 0: Disabled Ethernet0 PTP clock 1: Enabled Ethernet0 PTP clock
27	ENET0RXEN	Ethernet0 RX clock enable This bit is set and reset by software. 0: Disabled Ethernet0 RX clock 1: Enabled Ethernet0 RX clock
26	ENET0TXEN	Ethernet0 TX clock enable This bit is set and reset by software. 0: Disabled Ethernet0 TX clock

		1: Enabled Ethernet0 TX clock
25	ENET0EN	Ethernet0 clock enable This bit is set and reset by software. 0: Disabled Ethernet0 clock 1: Enabled Ethernet0 clock
24	Reserved	Must be kept at reset value.
23	DMAMUXEN	DMAMUX clock enable This bit is set and reset by software. 0: Disabled DMAMUX clock 1: Enabled DMAMUX clock
22	DMA1EN	DMA1 clock enable This bit is set and reset by software. 0: Disabled DMA1 clock 1: Enabled DMA1 clock
21	DMA0EN	DMA0 clock enable This bit is set and reset by software. 0: Disabled DMA0 clock 1: Enabled DMA0 clock
20:16	Reserved	Must be kept at reset value.
15	USBHS0ULPIEN	USBHS0 ULPI clock enable This bit is set and reset by software. 0: Disabled USBHS0 ULPI clock 1: Enabled USBHS0 ULPI clock
14	USBHS0EN	USBHS0 clock enable This bit is set and reset by software. 0: Disabled USBHS0 clock 1: Enabled USBHS0 clock
13:4	Reserved	Must be kept at reset value.
3	ENET1PTPEN	Ethernet1 PTP clock enable This bit is set and reset by software. 0: Disabled Ethernet1 PTP clock 1: Enabled Ethernet1 PTP clock
2	ENET1RXEN	Ethernet1 RX clock enable This bit is set and reset by software. 0: Disabled Ethernet1 RX clock 1: Enabled Ethernet1 RX clock
1	ENET1TXEN	Ethernet1 TX clock enable This bit is set and reset by software.

		0: Disabled Ethernet1 TX clock 1: Enabled Ethernet1 TX clock
0	ENET1EN	Ethernet1 clock enable This bit is set and reset by software. 0: Disabled Ethernet1 clock 1: Enabled Ethernet1 clock

6.3.14. AHB2 enable register (RCU_AHB2EN)

Address offset: 0x34

Reset value: 0x0000 0100

This register can be accessed by byte (8-bit), half-word (16-bit) and word (32-bit).

31	30	29	28	27	26	25	24	23	22	21	20	19	18	17	16
Reserved															

15	14	13	12	11	10	9	8	7	6	5	4	3	2	1	0
Reserved							RAMECCMU1EN	TMUEN	TRNGEN	Reserved	HAUEN	CAUEN	SDIO1EN	FACEN	DCIEN
							rw	rw	rw		rw	rw	rw	rw	rw

Bits	Fields	Descriptions
31:9	Reserved	Must be kept at reset value.
8	RAMECCMU1EN	RAMECCMU1 clock enable This bit is set and reset by software. 0: Disabled RAMECCMU1 clock 1: Enabled RAMECCMU1 clock
7	TMUEN	TMU clock enable This bit is set and reset by software. 0: Disabled TMU clock 1: Enabled TMU clock
6	TRNGEN	TRNG clock enable This bit is set and reset by software. 0: Disabled TRNG clock 1: Enabled TRNG clock
5	Reserved	Must be kept at reset value.
4	HAUEN	HAU clock enable This bit is set and reset by software. 0: Disabled HAU clock 1: Enabled HAU clock

3	CAUEN	CAU clock enable This bit is set and reset by software. 0: Disabled CAU clock 1: Enabled CAU clock
2	SDIO1EN	SDIO1 clock enable This bit is set and reset by software. 0: Disabled SDIO1 clock 1: Enabled SDIO1 clock
1	FACEN	FAC clock enable This bit is set and reset by software. 0: Disabled FAC clock 1: Enabled FAC clock
0	DCIEN	DCI clock enable This bit is set and reset by software. 0: Disabled DCI clock 1: Enabled DCI clock

6.3.15. AHB3 enable register (RCU_AHB3EN)

Address offset: 0x38

Reset value: 0x0000 8400

This register can be accessed by byte (8-bit), half-word (16-bit) and word (32-bit).

31	30	29	28	27	26	25	24	23	22	21	20	19	18	17	16
Reserved															

15	14	13	12	11	10	9	8	7	6	5	4	3	2	1	0
CPUEN	Reserved				RAMECCMU0EN	RTDEC1EN	RTDEC0EN	Reserved	OSPI1EN	OSPI0EN	OSPIMEN	MDMAEN	SDIO0EN	IPAEN	EXMCEN
rw					rw	rw	rw		rw	rw	rw	rw	rw	rw	rw

Bits	Fields	Descriptions
31:16	Reserved	Must be kept at reset value.
15	CPUEN	CPU clock enable This bit is set and reset by software. 0: Disabled CPU clock 1: Enabled CPU clock
14:11	Reserved	Must be kept at reset value.
10	RAMECCMU0EN	RAMECCMU0 clock enable This bit is set and reset by software. 0: Disabled RAMECCMU0 clock

		1: Enabled RAMECCMU0 clock
9	RTDEC1EN	RTDEC1 clock enable This bit is set and reset by software. 0: Disabled RTDEC1 clock 1: Enabled RTDEC1 clock
8	RTDEC0EN	RTDEC0 clock enable This bit is set and reset by software. 0: Disabled RTDEC0 clock 1: Enabled RTDEC0 clock
7	Reserved	Must be kept at reset value.
6	OSPI1EN	OSPI1 clock enable This bit is set and reset by software. 0: Disabled OSPI1 clock 1: Enabled OSPI1 clock
5	OSPI0EN	OSPI0 clock enable This bit is set and reset by software. 0: Disabled OSPI0 clock 1: Enabled OSPI0 clock
4	OSPIMEN	OSPIM clock enable This bit is set and reset by software. 0: Disabled OSPIM clock 1: Enabled OSPIM clock
3	MDMAEN	MDMA clock enable This bit is set and reset by software. 0: Disabled MDMA clock 1: Enabled MDMA clock
2	SDIO0EN	SDIO0 clock enable This bit is set and reset by software. 0: Disabled SDIO0 clock 1: Enabled SDIO0 clock
1	IPAEN	IPA clock enable This bit is set and reset by software. 0: Disabled IPA clock 1: Enabled IPA clock
0	EXMCEN	EXMC clock enable This bit is set and reset by software. 0: Disabled EXMC clock 1: Enabled EXMC clock

6.3.16. AHB4 enable register (RCU_AHB4EN)

Address offset: 0x3C

Reset value: 0x0000 0000

This register can be accessed by byte (8-bit), half-word (16-bit) and word (32-bit).

31	30	29	28	27	26	25	24	23	22	21	20	19	18	17	16
Reserved															

15	14	13	12	11	10	9	8	7	6	5	4	3	2	1	0
HWSEMEN	CRCEN	BKPSRAMEN	Reserved			PKEN	PJEN	PHEN	PGEN	PFEN	PEEN	PDEN	PCEN	PBEN	PAEN
rw	rw	rw				rw	rw	rw	rw	rw	rw	rw	rw	rw	rw

Bits	Fields	Descriptions
31:16	Reserved	Must be kept at reset value.
15	HWSEMEN	HWSEM clock enable This bit is set and reset by software. 0: Disabled HWSEM clock 1: Enabled HWSEM clock
14	CRCEN	CRC clock enable This bit is set and reset by software. 0: Disabled CRC clock 1: Enabled CRC clock
13	BKPSRAMEN	Backup SRAM clock enable This bit is set and reset by software. 0: Disabled Backup SRAM clock 1: Enabled Backup SRAM clock
12:10	Reserved	Must be kept at reset value.
9	PKEN	GPIO port K clock enable This bit is set and reset by software. 0: Disabled GPIO port K clock 1: Enabled GPIO port K clock
8	PJEN	GPIO port J clock enable This bit is set and reset by software. 0: Disabled GPIO port J clock 1: Enabled GPIO port J clock
7	PHEN	GPIO port H clock enable This bit is set and reset by software. 0: Disabled GPIO port H clock

		1: Enabled GPIO port H clock
6	PGEN	GPIO port G clock enable This bit is set and reset by software. 0: Disabled GPIO port G clock 1: Enabled GPIO port G clock
5	PFEN	GPIO port F clock enable This bit is set and reset by software. 0: Disabled GPIO port F clock 1: Enabled GPIO port F clock
4	PEEN	GPIO port E clock enable This bit is set and reset by software. 0: Disabled GPIO port E clock 1: Enabled GPIO port E clock
3	PDEN	GPIO port D clock enable This bit is set and reset by software. 0: Disabled GPIO port D clock 1: Enabled GPIO port D clock
2	PCEN	GPIO port C clock enable This bit is set and reset by software. 0: Disabled GPIO port C clock 1: Enabled GPIO port C clock
1	PBEN	GPIO port B clock enable This bit is set and reset by software. 0: Disabled GPIO port B clock 1: Enabled GPIO port B clock
0	PAEN	GPIO port A clock enable This bit is set and reset by software. 0: Disabled GPIO port A clock 1: Enabled GPIO port A clock

6.3.17. APB1 enable register (RCU_APB1EN)

Address offset: 0x40

Reset value: 0x0000 0000

This register can be accessed by byte (8-bit), half-word (16-bit) and word (32-bit).

31	30	29	28	27	26	25	24	23	22	21	20	19	18	17	16
UART7EN	UART6EN	DACEN	DACHOLDEN	CTCEN	Reserved		I2C3EN	I2C2EN	I2C1EN	I2C0EN	UART4EN	UART3EN	USART2EN	USART1EN	MDIOEN
rw	rw	rw	rw	rw			rw	rw	rw	rw	rw	rw	rw	rw	rw

15	14	13	12	11	10	9	8	7	6	5	4	3	2	1	0
SPI2EN	SPI1EN	RSPDIFEN	Reserved	TIMER51EN	TIMER50EN	TIMER31EN	TIMER30EN	TIMER23EN	TIMER22EN	TIMER6EN	TIMER5EN	TIMER4EN	TIMER3EN	TIMER2EN	TIMER1EN
rw	rw	rw		rw	rw	rw	rw	rw	rw	rw	rw	rw	rw	rw	rw

Bits	Fields	Descriptions
31	UART7EN	UART7 clock enable This bit is set and reset by software. 0: Disabled UART7 clock 1: Enabled UART7 clock
30	UART6EN	UART6 clock enable This bit is set and reset by software. 0: Disabled UART6 clock 1: Enabled UART6 clock
29	DACEN	DAC clock enable This bit is set and reset by software. 0: Disabled DAC clock 1: Enabled DAC clock
28	DACHOLDEN	DAC hold clock enable This bit is set and reset by software. The hold clock source is IRC32K. 0: Disabled DAC hold clock 1: Enabled DAC hold clock
27	CTCEN	CTC clock enable This bit is set and reset by software. 0: Disabled CTC clock 1: Enabled CTC clock
26:25	Reserved	Must be kept at reset value.
24	I2C3EN	I2C3 clock enable This bit is set and reset by software. 0: Disabled I2C3 clock 1: Enabled I2C3 clock
23	I2C2EN	I2C2 clock enable This bit is set and reset by software. 0: Disabled I2C2 clock 1: Enabled I2C2 clock
22	I2C1EN	I2C1 clock enable This bit is set and reset by software. 0: Disabled I2C1 clock 1: Enabled I2C1 clock

21	I2C0EN	I2C0 clock enable This bit is set and reset by software. 0: Disabled I2C0 clock 1: Enabled I2C0 clock
20	UART4EN	UART4 clock enable This bit is set and reset by software. 0: Disabled UART4 clock 1: Enabled UART4 clock
19	UART3EN	UART3 clock enable This bit is set and reset by software. 0: Disabled UART3 clock 1: Enabled UART3 clock
18	USART2EN	USART2 clock enable This bit is set and reset by software. 0: Disabled USART2 clock 1: Enabled USART2 clock
17	USART1EN	USART1 clock enable This bit is set and reset by software. 0: Disabled USART1 clock 1: Enabled USART1 clock
16	MDIOEN	MDIO clock enable This bit is set and reset by software. 0: Disabled MDIO clock 1: Enabled MDIO clock
15	SPI2EN	SPI2 clock enable This bit is set and reset by software. 0: Disabled SPI2 clock 1: Enabled SPI2 clock
14	SPI1EN	SPI1 clock enable This bit is set and reset by software. 0: Disabled SPI1 clock 1: Enabled SPI1 clock
13	RSPDIFEN	RSPDIF clock enable This bit is set and reset by software. 0: Disabled RSPDIF clock 1: Enabled RSPDIF clock
12	Reserved	Must be kept at reset value.
11	TIMER51EN	TIMER51 clock enable This bit is set and reset by software.

		0: Disabled TIMER51 clock 1: Enabled TIMER51 clock
10	TIMER50EN	TIMER50 clock enable This bit is set and reset by software. 0: Disabled TIMER50 clock 1: Enabled TIMER50 clock
9	TIMER31EN	TIMER31 clock enable This bit is set and reset by software. 0: Disabled TIMER31 clock 1: Enabled TIMER31 clock
8	TIMER30EN	TIMER30 clock enable This bit is set and reset by software. 0: Disabled TIMER30 clock 1: Enabled TIMER30 clock
7	TIMER23EN	TIMER23 clock enable This bit is set and reset by software. 0: Disabled TIMER23 clock 1: Enabled TIMER23 clock
6	TIMER22EN	TIMER22 clock enable This bit is set and reset by software. 0: Disabled TIMER22 clock 1: Enabled TIMER22 clock
5	TIMER6EN	TIMER6 clock enable This bit is set and reset by software. 0: Disabled TIMER6 clock 1: Enabled TIMER6 clock
4	TIMER5EN	TIMER5 clock enable This bit is set and reset by software. 0: Disabled TIMER5 clock 1: Enabled TIMER5 clock
3	TIMER4EN	TIMER4 clock enable This bit is set and reset by software. 0: Disabled TIMER4 clock 1: Enabled TIMER4 clock
2	TIMER3EN	TIMER3 clock enable This bit is set and reset by software. 0: Disabled TIMER3 clock 1: Enabled TIMER3 clock
1	TIMER2EN	TIMER2 clock enable

		This bit is set and reset by software. 0: Disabled TIMER2 clock 1: Enabled TIMER2 clock
0	TIMER1EN	TIMER1 clock enable This bit is set and reset by software. 0: Disabled TIMER1 clock 1: Enabled TIMER1 clock

6.3.18. APB2 enable register (RCU_APB2EN)

Address offset: 0x44

Reset value: 0x0000 0000

This register can be accessed by byte (8-bit), half-word (16-bit) and word (32-bit).

31	30	29	28	27	26	25	24	23	22	21	20	19	18	17	16
TRIGSELEN	EDOUTEN	TIMER44EN	TIMER43EN	TIMER42EN	TIMER41EN	TIMER40EN	SAI2EN	SAI1EN	SAI0EN	SPI5EN	SPI4EN	HPDFEN	TIMER16EN	TIMER15EN	TIMER14EN
rw	rw	rw	rw	rw	rw	rw	rw	rw	rw	rw	rw	rw	rw	rw	rw

15	14	13	12	11	10	9	8	7	6	5	4	3	2	1	0
Reserved		SPI3EN	SPI0EN	Reserved	ADC2EN	ADC1EN	ADC0EN	Reserved		USART5EN	USART0EN	Reserved		TIMER7EN	TIMER0EN
		rw	rw		rw	rw	rw			rw	rw			rw	rw

Bits	Fields	Descriptions
31	TRIGSELEN	TRIGSEL clock enable This bit is set and reset by software. 0: Disabled TRIGSEL clock 1: Enabled TRIGSEL clock
30	EDOUTEN	EDOUT clock enable This bit is set and reset by software. 0: Disabled EDOUT clock 1: Enabled EDOUT clock
29	TIMER44EN	TIMER44 clock enable This bit is set and reset by software. 0: Disabled TIMER44 clock 1: Enabled TIMER44 clock
28	TIMER43EN	TIMER43 clock enable This bit is set and reset by software. 0: Disabled TIMER43 clock 1: Enabled TIMER43 clock
27	TIMER42EN	TIMER42 clock enable

		This bit is set and reset by software. 0: Disabled TIMER42 clock 1: Enabled TIMER42 clock
26	TIMER41EN	TIMER41 clock enable This bit is set and reset by software. 0: Disabled TIMER41 clock 1: Enabled TIMER41 clock
25	TIMER40EN	TIMER40 clock enable This bit is set and reset by software. 0: Disabled TIMER40 clock 1: Enabled TIMER40 clock
24	SAI2EN	SAI2 clock enable This bit is set and reset by software. 0: Disabled SAI2 clock 1: Enabled SAI2 clock
23	SAI1EN	SAI1 clock enable This bit is set and reset by software. 0: Disabled SAI1 clock 1: Enabled SAI1 clock
22	SAI0EN	SAI0 clock enable This bit is set and reset by software. 0: Disabled SAI0 clock 1: Enabled SAI0 clock
21	SPI5EN	SPI5 clock enable This bit is set and reset by software. 0: Disabled SPI5 clock 1: Enabled SPI5 clock
20	SPI4EN	SPI4 clock enable This bit is set and reset by software. 0: Disabled SPI4 clock 1: Enabled SPI4 clock
19	HPDFEN	HPDF clock enable This bit is set and reset by software. 0: Disabled HPDF clock 1: Enabled HPDF clock
18	TIMER16EN	TIMER16 clock enable This bit is set and reset by software. 0: Disabled TIMER16 clock 1: Enabled TIMER16 clock

17	TIMER15EN	TIMER15 clock enable This bit is set and reset by software. 0: Disabled TIMER15 clock 1: Enabled TIMER15 clock
16	TIMER14EN	TIMER14 clock enable This bit is set and reset by software. 0: Disabled TIMER14 clock 1: Enabled TIMER14 clock
15:14	Reserved	Must be kept at reset value.
13	SPI3EN	SPI3 clock enable This bit is set and reset by software. 0: Disabled SPI3 clock 1: Enabled SPI3 clock
12	SPI0EN	SPI0 clock enable This bit is set and reset by software. 0: Disabled SPI0 clock 1: Enabled SPI0 clock
11	Reserved	Must be kept at reset value.
10	ADC2EN	ADC2 clock enable This bit is set and reset by software. 0: Disabled ADC2 clock 1: Enabled ADC2 clock
9	ADC1EN	ADC1 clock enable This bit is set and reset by software. 0: Disabled ADC1 clock 1: Enabled ADC1 clock
8	ADC0EN	ADC0 clock enable This bit is set and reset by software. 0: Disabled ADC0 clock 1: Enabled ADC0 clock
7:6	Reserved	Must be kept at reset value.
5	USART5EN	USART5 clock enable This bit is set and reset by software. 0: Disabled USART5 clock 1: Enabled USART5 clock
4	USART0EN	USART0 clock enable This bit is set and reset by software. 0: Disabled USART0 clock

		1: Enabled USART0 clock
3:2	Reserved	Must be kept at reset value.
1	TIMER7EN	TIMER7 clock enable This bit is set and reset by software. 0: Disabled TIMER7 clock 1: Enabled TIMER7 clock
0	TIMER0EN	TIMER0 clock enable This bit is set and reset by software. 0: Disabled TIMER0 clock 1: Enabled TIMER0 clock

6.3.19. APB3 enable register (RCU_APB3EN)

Address offset: 0x48

Reset value: 0x0000 0000

This register can be accessed by byte (8-bit), half-word (16-bit) and word (32-bit).

31	30	29	28	27	26	25	24	23	22	21	20	19	18	17	16
Reserved															

15	14	13	12	11	10	9	8	7	6	5	4	3	2	1	0
Reserved														WWDGTEN	TLIEN
														rw	rw

Bits	Fields	Descriptions
31:2	Reserved	Must be kept at reset value.
1	WWDGTEN	WWDGT clock enable This bit is set and reset by software. 0: Disabled WWDGT clock 1: Enabled WWDGT clock
0	TLIEN	TLI clock enable This bit is set and reset by software. 0: Disabled TLI clock 1: Enabled TLI clock

6.3.20. APB4 enable register (RCU_APB4EN)

Address offset: 0x4C

Reset value: 0x0000 0010

This register can be accessed by byte (8-bit), half-word (16-bit) and word (32-bit).

31	30	29	28	27	26	25	24	23	22	21	20	19	18	17	16
Reserved															

15	14	13	12	11	10	9	8	7	6	5	4	3	2	1	0
Reserved											PMUEN	LPDTSEN	VREFEN	CMPEN	SYSCFGEN
											rw	rw	rw	rw	rw

Bits	Fields	Descriptions
31:5	Reserved	Must be kept at reset value.
4	PMUEN	PMU clock enable This bit is set and reset by software. 0: Disabled PMU clock 1: Enabled PMU clock
3	LPDTSEN	LPDTS clock enable This bit is set and reset by software. 0: Disabled LPDTS clock 1: Enabled LPDTS clock
2	VREFEN	VREF clock enable This bit is set and reset by software. 0: Disabled VREF clock 1: Enabled VREF clock
1	CMPEN	CMP clock enable This bit is set and reset by software. 0: Disabled CMP clock 1: Enabled CMP clock
0	SYSCFGEN	SYSCFG clock enable This bit is set and reset by software. 0: Disabled SYSCFG clock 1: Enabled SYSCFG clock

6.3.21. AHB1 sleep mode enable register (RCU_AHB1SPEN)

Address offset: 0x50

Reset value: 0x7EE3 C00F

This register can be accessed by byte (8-bit), half-word (16-bit) and word (32-bit).

31	30	29	28	27	26	25	24	23	22	21	20	19	18	17	16
Reserved	USBHS1ULPISPEN	USBHS1SPEN	ENET0PTPSPEN	ENET0RXSPEN	ENET0TXSPEN	ENET0SPEN	Reserved	DMAMUXSPEN	DMA1SPEN	DMA0SPEN	Reserved			SRAM1SPEN	SRAM0SPEN
	rw	rw	rw	rw	rw	rw		rw	rw	rw				rw	rw
15	14	13	12	11	10	9	8	7	6	5	4	3	2	1	0

USBHS0ULPISPEN	USBHS0SPEN	Reserved	ENET1PTPSPEN	ENET1RXSPEN	ENET1TXSPEN	ENET1SPEN
rw	rw		rw	rw	rw	rw

Bits	Fields	Descriptions
31	Reserved	Must be kept at reset value.
30	USBHS1ULPISPEN	USBHS1 ULPI clock enable when sleep mode This bit is set and reset by software. 0: Disabled USBHS1 ULPI clock when sleep mode 1: Enabled USBHS1 ULPI clock when sleep mode
29	USBHS1SPEN	USBHS1 clock enable when sleep mode This bit is set and reset by software. 0: Disabled USBHS1 clock when sleep mode 1: Enabled USBHS1 clock when sleep mode
28	ENET0PTPSPEN	Ethernet0 PTP clock enable when sleep mode This bit is set and reset by software. 0: Disabled Ethernet0 PTP clock when sleep mode 1: Enabled Ethernet0 PTP clock when sleep mode
27	ENET0RXSPEN	Ethernet0 RX clock enable when sleep mode This bit is set and reset by software. 0: Disabled Ethernet0 RX clock when sleep mode 1: Enabled Ethernet0 RX clock when sleep mode
26	ENET0TXSPEN	Ethernet0 TX clock enable when sleep mode This bit is set and reset by software. 0: Disabled Ethernet0 TX clock when sleep mode 1: Enabled Ethernet0 TX clock when sleep mode
25	ENET0SPEN	Ethernet0 clock enable when sleep mode This bit is set and reset by software. 0: Disabled Ethernet0 clock when sleep mode 1: Enabled Ethernet0 clock when sleep mode
24	Reserved	Must be kept at reset value.
23	DMAMUXSPEN	DMAMUX clock enable when sleep mode This bit is set and reset by software. 0: Disabled DMAMUX clock when sleep mode 1: Enabled DMAMUX clock when sleep mode
22	DMA1SPEN	DMA1 clock enable when sleep mode This bit is set and reset by software. 0: Disabled DMA1 clock when sleep mode

		1: Enabled DMA1 clock when sleep mode
21	DMA0SPEN	DMA0 clock enable when sleep mode This bit is set and reset by software. 0: Disabled DMA0 clock when sleep mode 1: Enabled DMA0 clock when sleep mode
20:18	Reserved	Must be kept at reset value.
17	SRAM1SPEN	SRAM1 clock enable when sleep mode This bit is set and reset by software. 0: Disabled SRAM1 clock when sleep mode 1: Enabled SRAM1 clock when sleep mode
16	SRAM0SPEN	SRAM0 clock enable when sleep mode This bit is set and reset by software. 0: Disabled SRAM0 clock when sleep mode 1: Enabled SRAM0 clock when sleep mode
15	USBHS0ULPISPEN	USBHS0 ULPI clock enable when sleep mode This bit is set and reset by software. 0: Disabled USBHS0 ULPI clock when sleep mode 1: Enabled USBHS0 ULPI clock when sleep mode
14	USBHS0SPEN	USBHS0 clock enable when sleep mode This bit is set and reset by software. 0: Disabled USBHS0 clock when sleep mode 1: Enabled USBHS0 clock when sleep mode
13:4	Reserved	Must be kept at reset value.
3	ENET1PTPSPEN	Ethernet1 PTP clock enable when sleep mode This bit is set and reset by software. 0: Disabled Ethernet1 PTP clock when sleep mode 1: Enabled Ethernet1 PTP clock when sleep mode
2	ENET1RXSPEN	Ethernet1 RX clock enable when sleep mode This bit is set and reset by software. 0: Disabled Ethernet1 RX clock when sleep mode 1: Enabled Ethernet1 RX clock when sleep mode
1	ENET1TXSPEN	Ethernet1 TX clock enable when sleep mode This bit is set and reset by software. 0: Disabled Ethernet1 TX clock when sleep mode 1: Enabled Ethernet1 TX clock when sleep mode
0	ENET1SPEN	Ethernet1 clock enable when sleep mode This bit is set and reset by software. 0: Disabled Ethernet1 clock when sleep mode

1: Enabled Ethernet1 clock when sleep mode

6.3.22. AHB2 sleep mode enable register (RCU_AHB2SPEN)

Address offset: 0x54

Reset value: 0x0000 01DF

This register can be accessed by byte (8-bit), half-word (16-bit) and word (32-bit).

31	30	29	28	27	26	25	24	23	22	21	20	19	18	17	16
Reserved															

15	14	13	12	11	10	9	8	7	6	5	4	3	2	1	0
Reserved							RAMECCMU1SPEN	TMUSPEN	TRNGSPEN	Reserved	HAUSPEN	CAUSPEN	SDIO1SPEN	FACSPEN	DCISPEN
							rw	rw	rw		rw	rw	rw	rw	rw

Bits	Fields	Descriptions
31:9	Reserved	Must be kept at reset value.
8	RAMECCMU1SPEN	RAMECCMU1 clock enable when sleep mode This bit is set and reset by software. 0: Disabled RAMECCMU1 clock when sleep mode 1: Enabled RAMECCMU1 clock when sleep mode
7	TMUSPEN	TMU clock enable when sleep mode This bit is set and reset by software. 0: Disabled TMU clock when sleep mode 1: Enabled TMU clock when sleep mode
6	TRNGSPEN	TRNG clock enable when sleep mode This bit is set and reset by software. 0: Disabled TRNG clock when sleep mode 1: Enabled TRNG clock when sleep mode
5	Reserved	Must be kept at reset value.
4	HAUSPEN	HAU enable when sleep mode This bit is set and reset by software. 0: Disabled HAU clock when sleep mode 1: Enabled HAU clock when sleep mode
3	CAUSPEN	CAU clock enable when sleep mode This bit is set and reset by software. 0: Disabled CAU clock when sleep mode 1: Enabled CAU clock when sleep mode
2	SDIO1SPEN	SDIO1 clock enable when sleep mode

		This bit is set and reset by software. 0: Disabled SDIO1 clock when sleep mode 1: Enabled SDIO1 clock when sleep mode
1	FACSPEN	FAC clock enable when sleep mode This bit is set and reset by software. 0: Disabled FAC clock when sleep mode 1: Enabled FAC clock when sleep mode
0	DCISPEN	DCI clock enable when sleep mode This bit is set and reset by software. 0: Disabled DCI clock when sleep mode 1: Enabled DCI clock when sleep mode

6.3.23. AHB3 sleep mode enable register (RCU_AHB3SPEN)

Address offset: 0x58

Reset value: 0x0000 C77F

This register can be accessed by byte (8-bit), half-word (16-bit) and word (32-bit).

31	30	29	28	27	26	25	24	23	22	21	20	19	18	17	16
Reserved															

15	14	13	12	11	10	9	8	7	6	5	4	3	2	1	0
FMCSPEN	AXISRAMSPEN	Reserved			RAMECCMU0SPEN	RTDEC1SPEN	RTDEC0SPEN	Reserved	OSPI1SPEN	OSPI0SPEN	OSPIMSPEN	MDMASPEN	SDIO0SPEN	IPASPEN	EXMCSPEN
rw	rw				rw	rw	rw		rw	rw	rw	rw	rw	rw	rw

Bits	Fields	Descriptions
31:16	Reserved	Must be kept at reset value.
15	FMCSPEN	FMC clock enable when sleep mode This bit is set and reset by software. 0: Disabled FMC clock when sleep mode 1: Enabled FMC clock when sleep mode
14	AXISRAMSPEN	AXI SRAM clock enable when sleep mode This bit is set and reset by software. 0: Disabled AXI SRAM clock when sleep mode 1: Enabled AXI SRAM clock when sleep mode
13:11	Reserved	Must be kept at reset value.
10	RAMECCMU0SPEN	RAMECCMU0 clock enable when sleep mode This bit is set and reset by software. 0: Disabled RAMECCMU0 clock when sleep mode

		1: Enabled RAMECCMU0 clock when sleep mode
9	RTDEC1SPEN	RTDEC1 clock enable when sleep mode This bit is set and reset by software. 0: Disabled RTDEC1 clock when sleep mode 1: Enabled RTDEC1 clock when sleep mode
8	RTDEC0SPEN	RTDEC0 clock enable when sleep mode This bit is set and reset by software. 0: Disabled RTDEC0 clock when sleep mode 1: Enabled RTDEC0 clock when sleep mode
7	Reserved	Must be kept at reset value.
6	OSPI1SPEN	OSPI1 clock enable when sleep mode This bit is set and reset by software. 0: Disabled OSPI1 clock when sleep mode 1: Enabled OSPI1 clock when sleep mode
5	OSPI0SPEN	OSPI0 clock enable when sleep mode This bit is set and reset by software. 0: Disabled OSPI0 clock when sleep mode 1: Enabled OSPI0 clock when sleep mode
4	OSPIMSPEN	OSPIM clock enable when sleep mode This bit is set and reset by software. 0: Disabled OSPIM clock when sleep mode 1: Enabled OSPIM clock when sleep mode
3	MDMASPEN	MDMA clock enable when sleep mode This bit is set and reset by software. 0: Disabled MDMA clock when sleep mode 1: Enabled MDMA clock when sleep mode
2	SDIO0SPEN	SDIO0 clock enable when sleep mode This bit is set and reset by software. 0: Disabled SDIO0 clock when sleep mode 1: Enabled SDIO0 clock when sleep mode
1	IPASPEN	IPA clock enable when sleep mode This bit is set and reset by software. 0: Disabled IPA clock when sleep mode 1: Enabled IPA clock when sleep mode
0	EXMCSPEN	EXMC clock enable when sleep mode This bit is set and reset by software. 0: Disabled EXMC clock when sleep mode 1: Enabled EXMC clock when sleep mode

6.3.24. AHB4 sleep mode enable register (RCU_AHB4SPEN)

Address offset: 0x5C

Reset value: 0x0000 63FF

This register can be accessed by byte (8-bit), half-word (16-bit) and word (32-bit).

31	30	29	28	27	26	25	24	23	22	21	20	19	18	17	16
Reserved															

15	14	13	12	11	10	9	8	7	6	5	4	3	2	1	0
Reserved	CRCSPEN	BKPSRAMSPEN	Reserved			PKSPEN	PJSPEN	PHSPEN	PGSPEN	PFSPEN	PESPEN	PDSPEN	PCSPEN	PBSPEN	PASPEN
	rw	rw				rw	rw	rw	rw	rw	rw	rw	rw	rw	rw

Bits	Fields	Descriptions
31:15	Reserved	Must be kept at reset value.
14	CRCSPEN	CRC clock enable when sleep mode This bit is set and reset by software. 0: Disabled CRC clock when sleep mode 1: Enabled CRC clock when sleep mode
13	BKPSRAMSPEN	Backup SRAM clock enable when sleep mode This bit is set and reset by software. 0: Disabled Backup SRAM clock when sleep mode 1: Enabled Backup SRAM clock when sleep mode
12:10	Reserved	Must be kept at reset value.
9	PKSPEN	GPIO port K clock enable when sleep mode This bit is set and reset by software. 0: Disabled GPIO port K clock when sleep mode 1: Enabled GPIO port K clock when sleep mode
8	PJSPEN	GPIO port J clock enable when sleep mode This bit is set and reset by software. 0: Disabled GPIO port J clock when sleep mode 1: Enabled GPIO port J clock when sleep mode
7	PHSPEN	GPIO port H clock enable when sleep mode This bit is set and reset by software. 0: Disabled GPIO port H clock when sleep mode 1: Enabled GPIO port H clock when sleep mode
6	PGSPEN	GPIO port G clock enable when sleep mode This bit is set and reset by software. 0: Disabled GPIO port G clock when sleep mode

		1: Enabled GPIO port G clock when sleep mode
5	PFSPEN	GPIO port F clock enable when sleep mode This bit is set and reset by software. 0: Disabled GPIO port F clock when sleep mode 1: Enabled GPIO port F clock when sleep mode
4	PESPEN	GPIO port E clock enable when sleep mode This bit is set and reset by software. 0: Disabled GPIO port E clock when sleep mode 1: Enabled GPIO port E clock when sleep mode
3	PDSPEN	GPIO port D clock enable when sleep mode This bit is set and reset by software. 0: Disabled GPIO port D clock when sleep mode 1: Enabled GPIO port D clock when sleep mode
2	PCSPEN	GPIO port C clock enable when sleep mode This bit is set and reset by software. 0: Disabled GPIO port C clock when sleep mode 1: Enabled GPIO port C clock when sleep mode
1	PBSPEN	GPIO port B clock enable when sleep mode This bit is set and reset by software. 0: Disabled GPIO port B clock when sleep mode 1: Enabled GPIO port B clock when sleep mode
0	PASPEN	GPIO port A clock enable when sleep mode This bit is set and reset by software. 0: Disabled GPIO port A clock when sleep mode 1: Enabled GPIO port A clock when sleep mode

6.3.25. APB1 sleep mode enable register (RCU_APB1SPEN)

Address offset: 0x60

Reset value: 0xF9FF EFFF

This register can be accessed by byte (8-bit), half-word (16-bit) and word (32-bit).

31	30	29	28	27	26	25	24	23	22	21	20	19	18	17	16
UART7SPEN	UART6SPEN	DACSPEN	DACHOLDSPEN	CTCSPEN	Reserved		I2C3SPEN	I2C2SPEN	I2C1SPEN	I2C0SPEN	UART4SPEN	UART3SPEN	USART2SPEN	USART1SPEN	MDIOSPEN
rw	rw	rw	rw	rw			rw	rw	rw	rw	rw	rw	rw	rw	rw

15	14	13	12	11	10	9	8	7	6	5	4	3	2	1	0
SPI2SPEN	SPI1SPEN	RSPDIFSPEN	Reserved	TIMER51SPEN	TIMER50SPEN	TIMER31SPEN	TIMER30SPEN	TIMER23SPEN	TIMER22SPEN	TIMER6SPEN	TIMER5SPEN	TIMER4SPEN	TIMER3SPEN	TIMER2SPEN	TIMER1SPEN
rw	rw	rw		rw	rw	rw	rw	rw	rw	rw	rw	rw	rw	rw	rw

Bits	Fields	Descriptions
31	UART7SPEN	UART7 clock enable when sleep mode This bit is set and reset by software. 0: Disabled UART7 clock when sleep mode 1: Enabled UART7 clock when sleep mode
30	UART6SPEN	UART6 clock enable when sleep mode This bit is set and reset by software. 0: Disabled UART6 clock when sleep mode 1: Enabled UART6 clock when sleep mode
29	DACSPEN	DAC clock enable when sleep mode This bit is set and reset by software. 0: Disabled DAC clock when sleep mode 1: Enabled DAC clock when sleep mode
28	DACHOLDSPEN	DAC hold clock enable when sleep mode This bit is set and reset by software. The hold clock source is IRC32K. 0: Disabled DAC hold clock when sleep mode 1: Enabled DAC hold clock when sleep mode
27	CTCSPEN	CTC clock enable when sleep mode This bit is set and reset by software. 0: Disabled CTC clock when sleep mode 1: Enabled CTC clock when sleep mode
26:25	Reserved	Must be kept at reset value.
24	I2C3SPEN	I2C3 clock enable when sleep mode This bit is set and reset by software. 0: Disabled I2C3 clock when sleep mode 1: Enabled I2C3 clock when sleep mode
23	I2C2SPEN	I2C2 clock enable when sleep mode This bit is set and reset by software. 0: Disabled I2C2 clock when sleep mode 1: Enabled I2C2 clock when sleep mode
22	I2C1SPEN	I2C1 clock enable when sleep mode This bit is set and reset by software. 0: Disabled I2C1 clock when sleep mode 1: Enabled I2C1 clock when sleep mode
21	I2C0SPEN	I2C0 clock enable when sleep mode This bit is set and reset by software. 0: Disabled I2C0 clock when sleep mode 1: Enabled I2C0 clock when sleep mode
20	UART4SPEN	UART4 clock enable when sleep mode

		This bit is set and reset by software. 0: Disabled UART4 clock when sleep mode 1: Enabled UART4 clock when sleep mode
19	UART3SPEN	UART3 clock enable when sleep mode This bit is set and reset by software. 0: Disabled UART3 clock when sleep mode 1: Enabled UART3 clock when sleep mode
18	USART2SPEN	USART2 clock enable when sleep mode This bit is set and reset by software. 0: Disabled USART2 clock when sleep mode 1: Enabled USART2 clock when sleep mode
17	USART1SPEN	USART1 clock enable when sleep mode This bit is set and reset by software. 0: Disabled USART1 clock when sleep mode 1: Enabled USART1 clock when sleep mode
16	MDIOSPEN	MDIO clock enable when sleep mode This bit is set and reset by software. 0: Disabled MDIO clock when sleep mode 1: Enabled MDIO clock when sleep mode
15	SPI2SPEN	SPI2 clock enable when sleep mode This bit is set and reset by software. 0: Disabled SPI2 clock when sleep mode 1: Enabled SPI2 clock when sleep mode
14	SPI1SPEN	SPI1 clock enable when sleep mode This bit is set and reset by software. 0: Disabled SPI1 clock when sleep mode 1: Enabled SPI1 clock when sleep mode
13	RSPDIFSPEN	RSPDIF clock enable when sleep mode This bit is set and reset by software. 0: Disabled RSPDIF clock when sleep mode 1: Enabled RSPDIF clock when sleep mode
12	Reserved	Must be kept at reset value.
11	TIMER51SPEN	TIMER51 clock enable when sleep mode This bit is set and reset by software. 0: Disabled TIMER51 clock when sleep mode 1: Enabled TIMER51 clock when sleep mode
10	TIMER50SPEN	TIMER50 clock enable when sleep mode This bit is set and reset by software. 0: Disabled TIMER50 clock when sleep mode

		1: Enabled TIMER50 clock when sleep mode
9	TIMER31SPEN	TIMER31 clock enable when sleep mode This bit is set and reset by software. 0: Disabled TIMER31 clock when sleep mode 1: Enabled TIMER31 clock when sleep mode
8	TIMER30SPEN	TIMER30 clock enable when sleep mode This bit is set and reset by software. 0: Disabled TIMER30 clock when sleep mode 1: Enabled TIMER30 clock when sleep mode
7	TIMER23SPEN	TIMER23 clock enable when sleep mode This bit is set and reset by software. 0: Disabled TIMER23 clock when sleep mode 1: Enabled TIMER23 clock when sleep mode
6	TIMER22SPEN	TIMER22 clock enable when sleep mode This bit is set and reset by software. 0: Disabled TIMER22 clock when sleep mode 1: Enabled TIMER22 clock when sleep mode
5	TIMER6SPEN	TIMER6 clock enable when sleep mode This bit is set and reset by software. 0: Disabled TIMER6 clock when sleep mode 1: Enabled TIMER6 clock when sleep mode
4	TIMER5SPEN	TIMER5 clock enable when sleep mode This bit is set and reset by software. 0: Disabled TIMER5 clock when sleep mode 1: Enabled TIMER5 clock when sleep mode
3	TIMER4SPEN	TIMER4 clock enable when sleep mode This bit is set and reset by software. 0: Disabled TIMER4 clock when sleep mode 1: Enabled TIMER4 clock when sleep mode
2	TIMER3SPEN	TIMER3 clock enable when sleep mode This bit is set and reset by software. 0: Disabled TIMER3 clock when sleep mode 1: Enabled TIMER3 clock when sleep mode
1	TIMER2SPEN	TIMER2 clock enable when sleep mode This bit is set and reset by software. 0: Disabled TIMER2 clock when sleep mode 1: Enabled TIMER2 clock when sleep mode
0	TIMER1SPEN	TIMER1 clock enable when sleep mode This bit is set and reset by software.

0: Disabled TIMER1 clock when sleep mode

1: Enabled TIMER1 clock when sleep mode

6.3.26. APB2 sleep mode enable register (RCU_APB2SPEN)

Address offset: 0x64

Reset value: 0xFFFF 3733

This register can be accessed by byte (8-bit), half-word (16-bit) and word (32-bit).

31	30	29	28	27	26	25	24	23	22	21	20	19	18	17	16
TRIGSELSPEN	EDOUTSPEN	TIMER44SPEN	TIMER43SPEN	TIMER42SPEN	TIMER41SPEN	TIMER40SPEN	SAI2SPEN	SAI1SPEN	SAI0SPEN	SPI5SPEN	SPI4SPEN	HPDFSPEN	TIMER16SPEN	TIMER15SPEN	TIMER14SPEN
rw	rw	rw	rw	rw	rw	rw	rw	rw	rw	rw	rw	rw	rw	rw	rw

15	14	13	12	11	10	9	8	7	6	5	4	3	2	1	0
Reserved		SPI3SPEN	SPI0SPEN	Reserved	ADC2SPEN	ADC1SPEN	ADC0SPEN	Reserved		USART5SPEN	USART0SPEN	Reserved		TIMER7SPEN	TIMER0SPEN
		rw	rw		rw	rw	rw			rw	rw			rw	rw

Bits	Fields	Descriptions
31	TRIGSELSPEN	TRIGSEL clock enable when sleep mode This bit is set and reset by software. 0: Disabled TRIGSEL clock when sleep mode 1: Enabled TRIGSEL clock when sleep mode
30	EDOUTSPEN	EDOUT clock enable when sleep mode This bit is set and reset by software. 0: Disabled EDOUT clock when sleep mode 1: Enabled EDOUT clock when sleep mode
29	TIMER44SPEN	TIMER44 clock enable when sleep mode This bit is set and reset by software. 0: Disabled TIMER44 clock when sleep mode 1: Enabled TIMER44 clock when sleep mode
28	TIMER43SPEN	TIMER43 clock enable when sleep mode This bit is set and reset by software. 0: Disabled TIMER43 clock when sleep mode 1: Enabled TIMER43 clock when sleep mode
27	TIMER42SPEN	TIMER42 clock enable when sleep mode This bit is set and reset by software. 0: Disabled TIMER42 clock when sleep mode 1: Enabled TIMER42 clock when sleep mode
26	TIMER41SPEN	TIMER41 clock enable when sleep mode This bit is set and reset by software.

		0: Disabled TIMER41 clock when sleep mode 1: Enabled TIMER41 clock when sleep mode
25	TIMER40SPEN	TIMER40 clock enable when sleep mode This bit is set and reset by software. 0: Disabled TIMER40 clock when sleep mode 1: Enabled TIMER40 clock when sleep mode
24	SAI2SPEN	SAI2 clock enable when sleep mode This bit is set and reset by software. 0: Disabled SAI2 clock when sleep mode 1: Enabled SAI2 clock when sleep mode
23	SAI1SPEN	SAI1 clock enable when sleep mode This bit is set and reset by software. 0: Disabled SAI1 clock when sleep mode 1: Enabled SAI1 clock when sleep mode
22	SAI0SPEN	SAI0 clock enable when sleep mode This bit is set and reset by software. 0: Disabled SAI0 clock when sleep mode 1: Enabled SAI0 clock when sleep mode
21	SPI5SPEN	SPI5 clock enable when sleep mode This bit is set and reset by software. 0: Disabled SPI5 clock when sleep mode 1: Enabled SPI5 clock when sleep mode
20	SPI4SPEN	SPI4 clock enable when sleep mode This bit is set and reset by software. 0: Disabled SPI4 clock when sleep mode 1: Enabled SPI4 clock when sleep mode
19	HPDFSPEN	HPDF clock enable when sleep mode This bit is set and reset by software. 0: Disabled HPDF clock when sleep mode 1: Enabled HPDF clock when sleep mode
18	TIMER16SPEN	TIMER16 clock enable when sleep mode This bit is set and reset by software. 0: Disabled TIMER16 clock when sleep mode 1: Enabled TIMER16 clock when sleep mode
17	TIMER15SPEN	TIMER15 clock enable when sleep mode This bit is set and reset by software. 0: Disabled TIMER15 clock when sleep mode 1: Enabled TIMER15 clock when sleep mode
16	TIMER14SPEN	TIMER14 clock enable when sleep mode

		This bit is set and reset by software. 0: Disabled TIMER14 clock when sleep mode 1: Enabled TIMER14 clock when sleep mode
15:14	Reserved	Must be kept at reset value.
13	SPI3SPEN	SPI3 clock enable when sleep mode This bit is set and reset by software. 0: Disabled SPI3 clock when sleep mode 1: Enabled SPI3 clock when sleep mode
12	SPI0SPEN	SPI0 clock enable when sleep mode This bit is set and reset by software. 0: Disabled SPI0 clock when sleep mode 1: Enabled SPI0 clock when sleep mode
11	Reserved	Must be kept at reset value.
10	ADC2SPEN	ADC2 clock enable when sleep mode This bit is set and reset by software. 0: Disabled ADC2 clock when sleep mode 1: Enabled ADC2 clock when sleep mode
9	ADC1SPEN	ADC1 clock enable when sleep mode This bit is set and reset by software. 0: Disabled ADC1 clock when sleep mode 1: Enabled ADC1 clock when sleep mode
8	ADC0SPEN	ADC0 clock enable when sleep mode This bit is set and reset by software. 0: Disabled ADC0 clock when sleep mode 1: Enabled ADC0 clock when sleep mode
7:6	Reserved	Must be kept at reset value.
5	USART5SPEN	USART5 clock enable when sleep mode This bit is set and reset by software. 0: Disabled USART5 clock when sleep mode 1: Enabled USART5 clock when sleep mode
4	USART0SPEN	USART0 clock enable when sleep mode This bit is set and reset by software. 0: Disabled USART0 clock when sleep mode 1: Enabled USART0 clock when sleep mode
3:2	Reserved	Must be kept at reset value.
1	TIMER7SPEN	TIMER7 clock enable when sleep mode This bit is set and reset by software. 0: Disabled TIMER7 clock when sleep mode

		1: Enabled TIMER7 clock when sleep mode
0	TIMER0SPEN	TIMER0 clock enable when sleep mode This bit is set and reset by software. 0: Disabled TIMER0 clock when sleep mode 1: Enabled TIMER0 clock when sleep mode

6.3.27. APB3 sleep mode enable register (RCU_APB3SPEN)

Address offset: 0x68

Reset value: 0x0000 0003

This register can be accessed by byte (8-bit), half-word (16-bit) and word (32-bit).

31	30	29	28	27	26	25	24	23	22	21	20	19	18	17	16
Reserved															

15	14	13	12	11	10	9	8	7	6	5	4	3	2	1	0
Reserved														WWDGTSPEN	TLISPEN
														rw	rw

Bits	Fields	Descriptions
31:2	Reserved	Must be kept at reset value.
1	WWDGTSPEN	WWDGT clock enable when sleep mode This bit is set and reset by software. 0: Disabled WWDGT clock when sleep mode 1: Enabled WWDGT clock when sleep mode
0	TLISPEN	TLI clock enable when sleep mode This bit is set and reset by software. 0: Disabled TLI clock when sleep mode 1: Enabled TLI clock when sleep mode

6.3.28. APB4 sleep mode enable register (RCU_APB4SPEN)

Address offset: 0x6C

Reset value: 0x0000 001F

This register can be accessed by byte (8-bit), half-word (16-bit) and word (32-bit).

31	30	29	28	27	26	25	24	23	22	21	20	19	18	17	16
Reserved															

15	14	13	12	11	10	9	8	7	6	5	4	3	2	1	0

Reserved	PMUSPEN	LPDTSSPEN	VREFSPEN	CMPSPEN	SYSCFGSPEN
	rw	rw	rw	rw	rw

Bits	Fields	Descriptions
31:5	Reserved	Must be kept at reset value.
4	PMUSPEN	PMU clock enable when sleep mode This bit is set and reset by software. 0: Disabled PMU clock when sleep mode 1: Enabled PMU clock when sleep mode
3	LPDTSSPEN	LPDTS clock enable when sleep mode This bit is set and reset by software. 0: Disabled LPDTS clock when sleep mode 1: Enabled LPDTS clock when sleep mode
2	VREFSPEN	VREF clock enable when sleep mode This bit is set and reset by software. 0: Disabled VREF clock when sleep mode 1: Enabled VREF clock when sleep mode
1	CMPSPEN	CMPclock enable when sleep mode This bit is set and reset by software. 0: Disabled CMPclock when sleep mode 1: Enabled CMP clock when sleep mode
0	SYSCFGSPEN	SYSCFG clock enable when sleep mode This bit is set and reset by software. 0: Disabled SYSCFG clock when sleep mode 1: Enabled SYSCFG clock when sleep mode

6.3.29. Backup domain control register (RCU_BDCTL)

Address offset: 0x70

Reset value: 0x0000 0018, reset by Backup domain Reset.

This register can be accessed by byte (8-bit), half-word (16-bit) and word (32-bit).

Note: The LXTALEN, LXTALBPS, RTCSRC and RTCEN bits of the backup domain control register (RCU_BDCTL) are only reset after a backup domain reset. These bits can be modified only when the BKPWEN bit in the power control register (PMU_CTL) is set.

31	30	29	28	27	26	25	24	23	22	21	20	19	18	17	16
Reserved															BKPRST
															rw
15	14	13	12	11	10	9	8	7	6	5	4	3	2	1	0

RTCEN	Reserved	RTCSRC[1:0]	Reserved	LCKMD	LCKMEN	LXTALDRI[1:0]	LXTALBPS	LXTALSTB	LXTALEN
rw		rw		r	rw	rw	rw	r	rw

Bits	Fields	Descriptions
31:17	Reserved	Must be kept at reset value.
16	BKPRST	Backup domain reset This bit is set and reset by software. 0: No reset 1: Resets backup domain
15	RTCEN	RTC clock enable This bit is set and reset by software. 0: Disabled RTC clock 1: Enabled RTC clock
14:10	Reserved	Must be kept at reset value.
9:8	RTCSRC[1:0]	RTC clock entry selection Set and reset by software to control the RTC clock source. Once the RTC clock source has been selected, it cannot be changed anymore unless the backup domain is reset. 00: No clock selected 01: CK_LXTAL selected as RTC source clock 10: CK_IRC32K selected as RTC source clock 11: (CK_HXTAL / RTCDIV) selected as RTC source clock, please refer to RTCDIV bits in RCU_CFG0 register.
7	Reserved	Must be kept at reset value.
6	LCKMD	LXTAL clock failure detection Set by hardware to indicate when a failure has been detected by the clock security system on the external 32 kHz oscillator (LXTAL). It can be clean by disable LCKMEN or disable LXTALEN. 0: No failure detected on LXTAL (32 kHz oscillator) 1: Failure detected on LXTAL (32 kHz oscillator)
5	LCKMEN	LXTAL clock monitor enable 0: Disable the LXTAL clock monitor 1: Enable the LXTAL clock monitor Set by software to enable the clock security system on LXTAL (32 kHz oscillator). LCKMEN should be enabled only on the LXTAL is enabled (LXTALEN bit enabled) and ready (LXTALSTB flag set by hardware). **Note:** Once LCKMEN bit is set, this bit can be reset by backup domain reset or reseting this bit after detecting LXTAL clock failure (LCKMD = 1).

4:3	LXTALDRI[1:0]	LXTAL drive capability Set and reset by software. Backup domain reset resets this value. 00: Lower driving capability 01: Medium low driving capability 10: Medium high driving capability 11: Higher driving capability **Note:** The LXTALDRI is not in bypass mode.
2	LXTALBPS	LXTAL bypass mode enable Set and reset by software. 0: Disable the LXTAL Bypass mode 1: Enable the LXTAL Bypass mode
1	LXTALSTB	Low speed crystal oscillator stabilization flag Set by hardware to indicate if the LXTAL output clock is stable and ready for use. 0: LXTAL is not stable 1: LXTAL is stable
0	LXTALEN	LXTAL enable Set and reset by software. 0: Disable LXTAL 1: Enable LXTAL

6.3.30. Reset source/clock register (RCU_RSTSCK)

Address offset: 0x74

Reset value: 0x0E00 0000, all reset flags reset by power reset only, RSTFC / IRC32KEN reset by system reset.

This register can be accessed by byte (8-bit), half-word (16-bit) and word (32-bit).

31	30	29	28	27	26	25	24	23	22	21	20	19	18	17	16
LPRSTF	WWDGTRSTF	FWDGTRSTF	SWRSTF	PORRSTF	EPRSTF	BORRSTF	RSTFC	Reserved							
r	r	r	r	r	r	r	rw								

15	14	13	12	11	10	9	8	7	6	5	4	3	2	1	0
Reserved														IRC32KSTB	IRC32KEN
														r	rw

Bits	Fields	Descriptions
31	LPRSTF	Low-power reset flag Set by hardware when Deep-sleep /standby reset generated. Reset by writing 1 to the RSTFC bit. 0: No Low-power management reset generated 1: Low-power management reset generated

30	WWDGTRSTF	Window watchdog timer reset flag Set by hardware when a window watchdog timer reset generated. Reset by writing 1 to the RSTFC bit. 0: No window watchdog reset generated 1: Window watchdog reset generated
29	FWDGTRSTF	Free watchdog timer reset flag Set by hardware when a free watchdog timer reset generated. Reset by writing 1 to the RSTFC bit. 0: No free watchdog timer reset generated 1: free Watchdog timer reset generated
28	SWRSTF	Software reset flag Set by hardware when a software reset generated. Reset by writing 1 to the RSTFC bit. 0: No software reset generated 1: Software reset generated
27	PORRSTF	Power reset flag Set by hardware when a power reset generated. Reset by writing 1 to the RSTFC bit. 0: No Power reset generated 1: Power reset generated
26	EPRSTF	External PIN reset flag Set by hardware when an external pin reset generated. Reset by writing 1 to the RSTFC bit. 0: No external pin reset generated 1: External pin reset generated
25	BORRSTF	BOR reset flag Set by hardware when a BOR reset generated. Reset by writing 1 to the RSTFC bit. 0: No BOR reset generated 1: BOR reset generated
24	RSTFC	Reset flag clear This bit is set by software to clear all reset flags. 0: Not clear reset flags 1: Clear reset flags
23:2	Reserved	Must be kept at reset value.
1	IRC32KSTB	IRC32K stabilization flag Set by hardware to indicate if the IRC32K output clock is stable and ready for use. 0: IRC32K is not stable 1: IRC32K is stable

0	IRC32KEN	IRC32K enable Set and reset by software. 0: Disable IRC32K 1: Enable IRC32K

6.3.31. PLL clock additional control register (RCU_PLLADDCTL)

Address offset: 0x80

Reset value: 0xFF81 0101

This register can be accessed by byte (8-bit), half-word (16-bit) and word (32-bit).

31	30	29	28	27	26	25	24	23	22	21	20	19	18	17	16
PLL2PEN	PLL2REN	PLL2QEN	PLL1PEN	PLL1REN	PLL1QEN	PLL0PEN	PLL0REN	PLL0QEN	PLL2Q[6:0]						
rw	rw	rw	rw	rw	rw	rw	rw	rw	rw			rw			

15	14	13	12	11	10	9	8	7	6	5	4	3	2	1	0
Reserved	PLL1Q[6:0]							Reserved	PLL0Q[6:0]						
				rw								rw			

Bits	Fields	Descriptions
31	PLL2PEN	PLL2P divider output enable This bit is set and reset by software. The PLL2PEN bit can be written only if the PLL2EN is 0. 0: Disable the CK_PLL2P output 1: Enable the CK_PLL2P output
30	PLL2REN	PLL2R divider output enable This bit is set and reset by software. The PLL2REN bit can be written only if the PLL2EN is 0. 0: Disable the CK_PLL2R output 1: Enable the CK_PLL2R output
29	PLL2QEN	PLL2Q divider output enable This bit is set and reset by software. The PLL2QEN bit can be written only if the PLL2EN is 0. 0: Disable the CK_PLL2Q output 1: Enable the CK_PLL2Q output
28	PLL1PEN	PLL1P divider output enable This bit is set and reset by software. The PLL1PEN bit can be written only if the PLL1EN is 0. 0: Disable the CK_PLL1P output 1: Enable the CK_PLL1P output
27	PLL1REN	PLL1R divider output enable This bit is set and reset by software. The PLL1REN bit can be written only if the PLL1EN is 0.

		0: Disable the CK_PLL1R output 1: Enable the CK_PLL1R output
26	PLL1QEN	PLL1Q divider output enable This bit is set and reset by software. The PLL1QEN bit can be written only if the PLL1EN is 0. 0: Disable the CK_PLL1Q output 1: Enable the CK_PLL1Q output
25	PLL0PEN	PLL0P divider output enable This bit is set and reset by software. The PLL0PEN bit can be written only if the PLL0EN is 0. 0: Disable the CK_PLL0P output 1: Enable the CK_PLL0P output
24	PLL0REN	PLL0R divider output enable This bit is set and reset by software. The PLL0REN bit can be written only if the PLL0EN is 0. 0: Disable the CK_PLL0R output 1: Enable the CK_PLL0R output
23	PLL0QEN	PLL0Q divider output enable This bit is set and reset by software. The PLL0QEN bit can be written only if the PLL0EN is 0. 0: Disable the CK_PLL0Q output 1: Enable the CK_PLL0Q output
22:16	PLL2Q[6:0]	The PLL2Q output frequency division factor from PLL2 VCO clock Set and reset by software when the PLL2 is disable. These bits used to generator PLL2Q output clock (CK_PLL2Q) from PLL2 VCO clock (CK_PLL2VCO). The CK_PLL2VCO is described in PLL2N bits in RCU_PLL2 register. 0000000: CK_PLL2Q = CK_PLL2VCO 0000001: CK_PLL2Q = CK_PLL2VCO / 2 0000010: CK_PLL2Q = CK_ PLL2VCO / 3. 0000011: CK_PLL2Q = CK_ PLL2VCO / 4 0000100: CK_PLL2Q = CK_ PLL2VCO / 5 … 1111111: CK_PLL2Q = CK_ PLL2VCO / 128
15	Reserved	Must be kept at reset value.
14:8	PLL1Q[6:0]	The PLL1Q output frequency division factor from PLL1 VCO clock Set and reset by software when the PLL1 is disable. These bits used to generator PLL1Q output clock (CK_PLL1Q) from PLL1 VCO clock (CK_PLL1VCO). The CK_PLL1VCO is described in PLL1N bits in RCU_PLL1 register. 0000000: CK_PLL1Q = CK_PLL1VCO 0000001: CK_ PLL1Q = CK_PLL1VCO / 2

		0000010: CK_PLL1Q = CK_PLL1VCO / 3. 0000011: CK_PLL1Q = CK_PLL1VCO / 4 0000100: CK_PLL1Q = CK_PLL1VCO / 5 … 1111111: CK_PLL1Q = CK_PLL1VCO / 128
7	Reserved	Must be kept at reset value.
6:0	PLL0Q[6:0]	The PLL0Q output frequency division factor from PLL0 VCO clock Set and reset by software when the PLL0 is disable. These bits used to generator PLL0Q output clock (CK_PLL0Q) from PLL0 VCO clock (CK_PLL0VCO). The CK_PLL0Q is used to USBHS (48MHz), TRNG(48MHz) and SDIO. The CK_PLL0VCO is described in PLL0N bits in RCU_PLL0 register. 0000000: CK_PLL0Q = CK_PLL0VCO 0000001: CK_PLL0Q = CK_PLL0VCO / 2 0000010: CK_PLL0Q = CK_PLL0VCO / 3 0000011: CK_PLL0Q = CK_PLL0VCO / 4 0000100: CK_PLL0Q = CK_PLL0VCO / 5 … 1111111: CK_PLL0Q = CK_PLL0VCO / 128

6.3.32. PLL1 register (RCU_PLL1)

Address offset: 0x84

Reset value: 0x0101 2020

To configure the PLL1 clock, refer to the following formula:

CK_PLL1VCOSRC = CK_PLL1SRC / PLL1PSC

CK_PLL1VCO = CK_PLL1VCOSRC × (PLL1N + PLL1FRAN / 2^{13})

CK_PLL1P = CK_ PLL1VCO / PLL1P

CK_PLL1R = CK_PLL1VCO / PLL1R

This register can be accessed by byte (8-bit), half-word (16-bit) and word (32-bit).

31	30	29	28	27	26	25	24	23	22	21	20	19	18	17	16
Reserved	PLL1R[6:0]							Reserved	PLL1P[6:0]						
	rw								rw						

15	14	13	12	11	10	9	8	7	6	5	4	3	2	1	0
Reserved	PLL1N[8:0]									PLL1PSC[5:0]					
	rw									rw					

Bits	Fields	Descriptions
31	Reserved	Must be kept at reset value.
30:24	PLL1R[6:0]	The PLL1R output frequency division factor from PLL1 VCO clock Set and reset by software when the PLL1 is disable. These bits used to generate PLL1R output clock (CK_PLL1R) from PLL1 VCO clock (CK_PLL1VCO). The

		CK_PLL1VCO is described in PLL1N bits in RCU_PLL1 register. 0000000: CK_PLL1R = CK_PLL1VCO 0000001: CK_PLL1R = CK_PLL1VCO / 2 0000010: CK_PLL1R = CK_PLL1VCO / 3. 0000011: CK_PLL1R = CK_PLL1VCO / 4 0000100: CK_PLL1R = CK_PLL1VCO / 5 … 1111111: CK_PLL1R = CK_PLL1VCO / 128
23	Reserved	Must be kept at reset value.
22:16	PLL1P[6:0]	The PLL1P output frequency division factor from PLL1 VCO clock Set and reset by software when the PLL1 is disable. These bits used to generator PLL1P output clock (CK_PLL1P) from PLL1 VCO clock (CK_PLL1VCO). The CK_PLL1VCO is described in PLL1N bits in RCU_ PLL1 register. 0000000: CK_PLL1P = CK_PLL1VCO 0000001: CK_PLL1P = CK_PLL1VCO / 2 0000010: CK_PLL1P = CK_PLL1VCO / 3 0000011: CK_PLL1P = CK_PLL1VCO / 4 0000100: CK_PLL1P = CK_PLL1VCO / 5 … 1111111: CK_PLL1P = CK_PLL1VCO / 128
15	Reserved	Must be kept at reset value.
14:6	PLL1N[8:0]	The PLL1 VCO clock multiplication factor Set and reset by software (only use word / half-word write) when the PLL1 is disable. These bits used to generate PLL1 VCO clock (CK_PLL1VCO) from PLL1 VCO source clock (CK_PLL1VCOSRC). The CK_PLL1VCOSRC is described in PLLPSC bits in RCU_PLL register **Note:** The frequency of CK_PLL1VCO is between 150MHz to 836MHz. The value of PLL1N must : 9≤PLL1N≤512 000000000: Reserved … 000000111: Reserved 000001000: PLL1N = 9. … 001000000: PLL1N = 65 001000001: PLL1N = 66 … 111111111: PLL1N = 512
5:0	PLL1PSC[5:0]	The PLL1 VCO source clock prescaler Set and reset by software when the PLL1 is disable. These bits used to generate the clock of PLL1 VCO source clock (CK_PLL1VCOSRC) from PLL1 source clock (CK_PLL1SRC) which is described in PLLSEL in RCU_PLLALL register.

The VCO source clock is between 1M to 16MHz.

000000: Reserved.

000001: CK_PLL1SRC

000010: CK_PLL1SRC / 2

000011: CK_PLL1SRC / 3

…

111111: CK_PLL1SRC / 63

6.3.33. PLL2 register (RCU_PLL2)

Address offset: 0x88

Reset value: 0x0101 2020

To configure the PLL2 clock, refer to the following formula:

CK_PLL2VCOSRC = CK_PLL2SRC / PLL2PSC

CK_PLL2VCO = CK_ PLL2VCOSRC × (PLL2N + PLL2FRAN / 2^{13})

CK_PLL2P = CK_ PLL2VCO / PLL2P

CK_PLL2R = CK_ PLL2VCO / PLL2R

This register can be accessed by byte (8-bit), half-word (16-bit) and word (32-bit).

31	30	29	28	27	26	25	24	23	22	21	20	19	18	17	16
Reserved	PLL2R[6:0]							Reserved	PLL2P[6:0]						
	rw								rw						

15	14	13	12	11	10	9	8	7	6	5	4	3	2	1	0
Reserved	PLL2N[8:0]									PLL2PSC[5:0]					
	rw									rw					

Bits	Fields	Descriptions
31	Reserved	Must be kept at reset value.
30:24	PLL2R[6:0]	The PLL2R output frequency division factor from PLL2 VCO clock Set and reset by software when the PLL2 is disable. These bits used to generate PLL2R output clock (CK_PLL2R) from PLL2 VCO clock (CK_PLL2VCO). The CK_PLL2R is used to generate TLI clock (⩽216MHz). The CK_PLL2VCO is described in PLL2N bits in RCU_PLL2 register. 0000000: CK_PLL2R = CK_PLL2VCO 0000001: CK_PLL2R = CK_PLL2VCO / 2 0000010: CK_PLL2R = CK_PLL2VCO / 3 0000011: CK_PLL2R = CK_PLL2VCO / 4 0000100: CK_PLL2R = CK_PLL2VCO / 5 … 1111111: CK_PLL2R = CK_PLL2VCO / 128
23	Reserved	Must be kept at reset value.
22:16	PLL2P[6:0]	The PLL2 P output frequency division factor from PLL2 VCO clock

		Set and reset by software when the PLL2 is disable. These bits used to generator PLL2 P output clock (CK_PLL2P) from PLL2 VCO clock (CK_PLL2VCO). The CK_PLL2P is used to USBHS (48MHz), TRNG (48MHz), or SDIO (≤48MHz). The CK_PLL2VCO is described in PLL2N bits in RCU_PLL2 register. 0000000: CK_PLL2P = CK_PLL2VCO 0000001: CK_PLL2P = CK_PLL2VCO / 2 0000010: CK_PLL2P = CK_PLL2VCO / 3 0000011: CK_PLL2P = CK_PLL2VCO / 4 0000100: CK_PLL2R = CK_PLL2VCO / 5 … 1111111: CK_PLL2R = CK_PLL2VCO / 128
15	Reserved	Must be kept at reset value.
14:6	PLL2N[8:0]	The PLL2 VCO clock multiplication factor Set and reset by software (only use word / half-word write) when the PLL2 is disable. These bits used to generate PLL2 VCO clock (CK_PLL2VCO) from PLL2 VCO source clock (CK_PLL2VCOSRC). The CK_PLL2VCOSRC is described in PLLPSC bits in RCU_PLL register. **Note:** The frequency of CK_PLL2VCO is between 150MHz to 836MHz The value of PLL2N must : 9≤PLL2N≤512 000000000: Reserved … 000000111: Reserved 000001000: PLL2N = 9. … 001000000: PLL2N = 65 001000001: PLL2N = 66 … 111111111: PLL2N = 512
5:0	PLL2PSC[5:0]	The PLL2 VCO source clock prescaler Set and reset by software when the PLL2 is disable. These bits used to generate the clock of PLL2 VCO source clock (CK_PLL2VCOSRC) from PLL2 source clock (CK_PLL2SRC) which is described in PLLSEL in RCU_PLLALL register. The VCO source clock is between 1M to 16MHz. 000000: Reserved . 000001: CK_PLL2SRC 000010: CK_PLL2SRC / 2 000011: CK_PLL2SRC / 3 … 111111: CK_PLL2SRC / 63

6.3.34. Clock configuration register 1 (RCU_CFG1)

Address offset: 0x8C

Reset value: 0x0000 3F00

This register can be accessed by byte (8-bit), half-word (16-bit) and word (32-bit).

31	30	29	28	27	26	25	24	23	22	21	20	19	18	17	16
HPDFSEL	Reserved						TIMERSEL	USART5SEL[1:0]		USART2SEL[1:0]		USART1SEL[1:0]		PLL2RDIV[1:0]	
rw							rw	rw		rw		rw		rw	

15	14	13	12	11	10	9	8	7	6	5	4	3	2	1	0
PERSEL[1:0]		CAN2SEL[1:0]		CAN1SEL[1:0]		CAN0SEL[1:0]		Reserved		RSPDIFSEL[1:0]		Reserved		USART0SEL[1:0]	
rw		rw		rw		rw				rw				rw	

Bits	Fields	Descriptions
31	HPDFSEL	HPDF clock source selection Set and reset by software to control the HPDF clock source 0: CK_APB2 selected as HPDF source clock 1: CK_AHB selected as HPDF source clock
30:25	Reserved	Must be kept at reset value.
24	TIMERSEL	TIMER clock selection This bit is set and reset by software. This bit defined all timer clock selection. 0: If APB1PSC / APB2PSC in RCU_CFG0 register is 0b0xx(CK_APBx = CK_AHB) or 0b100(CK_APBx = CK_AHB/2), the TIMER clock is equal to CK_AHB(CK_TIMERx = CK_AHB). Or else, the TIMER clock is twice the corresponding APB clock (TIMER in APB1 domain: CK_TIMERx = 2 x CK_APB1; TIMER in APB2 domain: CK_TIMERx = 2 x CK_APB2). 1: If APB1PSC / APB2PSC in RCU_CFG0 register is 0b0xx(CK_APBx = CK_AHB), 0b100(CK_APBx = CK_AHB / 2), or 0b101(CK_APBx = CK_AHB / 4), the TIMER clock is equal to CK_AHB(CK_TIMERx = CK_AHB). Or else, the TIMER clock is four times the corresponding APB clock (TIMER in APB1 domain: CK_TIMERx = 4 x CK_APB1, TIMER in APB2 domain: CK_TIMERx = 4 x CK_APB2).
23:22	USART5SEL[1:0]	USART5 clock source selection Set and reset by software to control the USART5 clock source 00: CK_APB2 output clock selected as USART5 source clock 01: CK_AHB output clock selected as USART5 source clock 10: CK_LXTAL output clock selected as USART5 source clock 11: CK_IRC64MDIV output clock selected as USART5 source clock
21:20	USART2SEL[1:0]	USART2 clock source selection Set and reset by software to control the USART2 clock source 00: CK_APB1 selected as USART2 source clock 01: CK_AHB selected as USART2 source clock

		10: CK_LXTAL selected as USART2 source clock 11: CK_IRC64MDIV selected as USART2 source clock
19:18	USART1SEL[1:0]	USART1 clock source selection Set and reset by software to control the USART1 clock source 00: CK_APB1 selected as USART1 source clock 01: CK_AHB selected as USART1 source clock 10: CK_LXTAL selected as USART1 source clock 11: CK_IRC64MDIV selected as USART1 source clock
17:16	PLL2RDIV[1:0]	The divider factor from PLL2R clock These bits are set and reset by software when PLL2 is disabled. These bits used to generate clock for TLI clock. 00: CK_PLL2R / 2 01: CK_PLL2R / 4 10: CK_PLL2R / 8 11: CK_PLL2R / 16
15:14	PERSEL[1:0]	CK_PER clock selection Set and reset by software to control the CK_PER clock source 00: CK_IRC64MDIV selected as CK_PER source clock 01: CK_LPIRC4M selected as CK_PER source clock 10: CK_HXTAL selected as CK_PER source clock 11: reserved
13:12	CAN2SEL[1:0]	CAN2 clock source selection Set and reset by software to control the CAN2 clock source 00: CK_HXTAL selected as CAN2 source clock 01: CK_APB2 selected as CAN2 source clock 10: CK_APB2 / 2 selected as CAN2 source clock 11: CK_IRC64MDIV selected as CAN2 source clock
11:10	CAN1SEL[1:0]	CAN1 clock selection Set and reset by software to control the CAN1 clock source 00: CK_HXTAL selected as CAN1 source clock 01: CK_APB2 selected as CAN1 source clock 10: CK_APB2 / 2 selected as CAN1 source clock 11: CK_IRC64MDIV selected as CAN1 source clock
9:8	CAN0SEL[1:0]	CAN0 clock source selection Set and reset by software to control the CAN0 clock source 00: CK_HXTAL selected as CAN0 source clock 01: CK_APB2 selected as CAN0 source clock 10: CK_APB2 / 2 selected as CAN0 source clock 11: CK_IRC64MDIV selected as CAN0 source clock
7:6	Reserved	Must be kept at reset value.

5:4	RSPDIFSEL[1:0]	RSPDIF clock source selection Set and reset by software to control the RSPDIF clock source 00: CK_PLL0Q selected as RSPDIF source clock 01: CK_PLL1R selected as RSPDIF source clock 10: CK_PLL2R selected as RSPDIF source clock 11: CK_IRC64MDIV selected as RSPDIF source clock
3:2	Reserved	Must be kept at reset value.
1:0	USART0SEL[1:0]	USART0 clock source selection Set and reset by software to control the USART0 clock source 00: CK_APB2 selected as USART0 source clock 01: CK_AHB selected as USART0 source clock 10: CK_LXTAL selected as USART0 source clock 11: CK_IRC64MDIV selected as USART0 source clock

6.3.35. Clock configuration register 2 (RCU_CFG2)

Address offset: 0x90

Reset value: 0x0000 0000

This register can be accessed by byte (8-bit), half-word (16-bit) and word (32-bit).

31	30	29	28	27	26	25	24	23	22	21	20	19	18	17	16
Reserved	SAI2B1SEL[2:0]			Reserved	SAI2B0SEL[2:0]			Reserved	SAI1SEL[2:0]			Reserved	SAI0SEL[2:0]		
	rw				rw				rw				rw		

15	14	13	12	11	10	9	8	7	6	5	4	3	2	1	0
Reserved	CKOUT1SEL[2:0]			CKOUT1DIV[3:0]				Reserved	CKOUT0SEL[2:0]			CKOUT0DIV[3:0]			
	rw				rw				rw				rw		

Bits	Fields	Descriptions
31	Reserved	Must be kept at reset value.
30:28	SAI2B1SEL[2:0]	SAI2 Block 1 clock source selection Set and reset by software to control the SAI2 BLOCK 1 clock source 000: CK_PLL0Q selected as SAI2 BLOCK 1 source clock 001: CK_PLL1P selected as SAI2 BLOCK 1 source clock 010: CK_PLL2P selected as SAI2 BLOCK 1 source clock 011: I2S_CKIN selected as SAI2 BLOCK 1 source clock 100: CK_PER selected as SAI2 BLOCK 1 source clock 101: CK_RSPDIF_SYMBselected as SAI2 BLOCK 1 source clock 11x: reserved
27	Reserved	Must be kept at reset value.
26:24	SAI2B0SEL[2:0]	SAI2 Block 0 clock source selection Set and reset by software to control the SAI2 BLOCK 0 clock source

		000: CK_PLL0Q selected as SAI2 BLOCK 0 source clock 001: CK_PLL1P selected as SAI2 BLOCK 0 source clock 010: CK_PLL2P selected as SAI2 BLOCK 0 source clock 011: I2S_CKIN selected as SAI2 BLOCK 0 source clock 100: CK_PER selected as SAI2 BLOCK 0 source clock 101: CK_RSPDIF_SYMBselected as SAI2 BLOCK 0 source clock 11x: reserved
23	Reserved	Must be kept at reset value.
22:20	SAI1SEL[1:0]	SAI1 clock source selection Set and reset by software to control the SAI1 clock source 000: CK_PLL0Q selected as SAI1 source clock 001: CK_PLL1P selected as SAI1 source clock 010: CK_PLL2P selected as SAI1 source clock 011: I2S_CKIN selected as SAI1 source clock 100: CK_PER selected as SAI1 source clock others: Reserved
19	Reserved	Must be kept at reset value.
18:16	SAI0SEL[1:0]	SA0 and HPDF audio clock source selection Set and reset by software to control the SAI0 and HPDF audio clock source 000: CK_PLL0Q selected as SAI0 and HPDF audio source clock 001: CK_PLL1P selected as SAI0 and HPDF audio source clock 010: CK_PLL2P selected as SAI0 and HPDF audio source clock 011: I2S_CKIN selected as SAI0 and HPDF audio source clock 100: CK_PER selected as SAI0 and HPDF audio source clock others: Reserved
15	Reserved	Must be kept at reset value.
14:12	CKOUT1SEL[2:0]	CKOUT1 clock source selection Set and reset by software. 000: CK_SYS clock selected 001: CK_PLL1R clock selected 010: CK_HXTAL clock selected 011: CK_PLL0P clock selected 100: CK_LPIRC4M clock selected 101: CK_IRC32K clock selected 110: CK_PLL2R clock selected 111: reserved **Note:** Configuration of this bit field may cause interference with CK_OUT1, and it is strongly recommended to configure these bits only after resetting but before enabling HXTAL and PLLs.

11:8	CKOUT1DIV[3:0]	The CK_OUT1 divider which the CK_OUT1 frequency can be reduced see bits14:12 of RCU_CFG2 for CK_OUT1 0000: inhibit predividers 0001: CK_OUT1 is divided by 1 0010: CK_OUT1 is divided by 2 0011: CK_OUT1 is divided by 3 0100: CK_OUT1 is divided by 4 … 1111: CK_OUT1 is divided by 15 **Note:** Configuration of this bit field may cause interference with CK_OUT1, and it is strongly recommended to configure these bits only after resetting but before enabling HXTAL and PLLs.
7	Reserved	Must be kept at reset value.
6:4	CKOUT0SEL[2:0]	CKOUT0 clock source selection Set and reset by software 000: CK_OUT0 selects CK_IRC64MDIV 001: CK_OUT0 selects CK_LXTAL 010: CK_OUT0 selects CK_HXTAL 011: CK_OUT0 selects CK_PLL0P 100: CK_OUT0 selects CK_IRC48M 101: CK_OUT0 selects CK_PER 110: CK_OUT0 selects USBHS0 60M 111: CK_OUT0 selects USBHS1 60M **Note:** Configuration of this bit field may cause interference with CK_OUT0, and it is strongly recommended to configure these bits only after resetting but before enabling HXTAL and PLLs.
3:0	CKOUT0DIV[3:0]	The CK_OUT0 divider which the CK_OUT0 frequency can be reduced see bits 6:4 of RCU_CFG2 for CK_OUT0 0000: inhibit predividers 0001: The CK_OUT0 is divided by 1 0010: The CK_OUT0 is divided by 2 0011: The CK_OUT0 is divided by 3 0100: The CK_OUT0 is divided by 4 … 1111: The CK_OUT0 is divided by 15 **Note:** Configuration of this bit field may cause interference with CK_OUT0, and it is strongly recommended to configure these bits only after resetting but before enabling HXTAL and PLLs.

6.3.36. Clock configuration register 3 (RCU_CFG3)

Address offset: 0x94

Reset value: 0x0000 0000

This register can be accessed by byte (8-bit), half-word (16-bit) and word (32-bit).

31	30	29	28	27	26	25	24	23	22	21	20	19	18	17	16
Reserved		ADC2SEL[1:0]		ADC01SEL[1:0]		Reserved	DSPWUSSEL	Reserved							
		rw		rw			rw								

15	14	13	12	11	10	9	8	7	6	5	4	3	2	1	0
Reserved			SDIO1SEL	Reserved						I2C3SEL[1:0]		I2C2SEL[1:0]		I2C1SEL[1:0]	
			rw							rw		rw		rw	

Bits	Fields	Descriptions
31:30	Reserved	Must be kept at reset value.
29:28	ADC2SEL[1:0]	ADC2 clock source selection Set and reset by software to control the ADC2 clock source 00: CK_PLL1P selected as ADC2 source clock 01: CK_PLL2R selected as ADC2 source clock 10: CK_PER selected as ADC2 source clock 11: reserved
27:26	ADC01SEL[1:0]	ADC0 and ADC1 clock source selection Set and reset by software to control the ADC0 and ADC1 clock source 00: CK_PLL1P selected as ADC0 and ADC1 source clock 01: CK_PLL2R selected as ADC0 and ADC1 source clock 10: CK_PER selected as ADC0 and ADC1 source clock 11: reserved
25	Reserved	Must be kept at reset value.
24	DSPWUSSEL	Deep-sleep wakeup system clock source selection Set and reset by software to select the system wakeup clock from deep-sleep mode. The selected clock is also used as emergency clock for the Clock stuck on HXTAL. 0: The CK_IRC64MDIV is selected as wake up system clock from deep-sleep mode 1: The CK_LPIRC4M is selected as wake up system clock from deep-sleep mode **Note:** If DSPWUSSEL = '1' and peripheral clock source select CK_IRC64MDIV, when system is wakeup form deep-sleep mode by this peripheral, if peripheral wakeup function turns off, the peripheral will have no clock because of IRC64M is turn off. In this case, user needs to set IRC64MEN in RCU_CTL register to turn on IRC64M clock again. When the CKMEN bit is set and the system clock is CK_HXTAL

		or switched to HXTAL, this bit cannot be changed.
23:13	Reserved	Must be kept at reset value.
12	SDIO1SEL	SDIO1 clock source selection Set and reset by software to control the SDIO1 clock source. 0: CK_PLL0Q selected as SDIO1 source clock 1: CK_PLL1R selected as SDIO1 source clock
11:6	Reserved	Must be kept at reset value.
5:4	I2C3SEL[1:0]	I2C3 clock source selection Set and reset by software to control the I2C3 clock source. 00: CK_APB1 selected as I2C3 source clock 01: CK_PLL2R selected as I2C3 source clock 10: CK_IRC64MDIV selected as I2C3 source clock 11: CK_LPIRC4M selected as I2C3 source clock
3:2	I2C2SEL[1:0]	I2C2 clock source selection Set and reset by software to control the I2C2 clock source. 00: CK_APB1 selected as I2C2 source clock 01: CK_PLL2R selected as I2C2 source clock 10: CK_IRC64MDIV selected as I2C2 source clock 11: CK_LPIRC4M selected as I2C2 source clock
1:0	I2C1SEL[1:0]	I2C1 clock source selection Set and reset by software to control the I2C1 clock source. 00: CK_APB1 selected as I2C1 source clock 01: CK_PLL2R selected as I2C1 source clock 10: CK_IRC64MDIV selected as I2C1 source clock 11: CK_LPIRC4M selected as I2C1 source clock

6.3.37. PLL all configuration register (RCU_PLLALL)

Address offset: 0x98

Reset value: 0x0000 0000

This register can be accessed by byte (8-bit), half-word (16-bit) and word (32-bit).

31	30	29	28	27	26	25	24	23	22	21	20	19	18	17	16
Reserved														PLLSEL[1:0]	
														rw	

15	14	13	12	11	10	9	8	7	6	5	4	3	2	1	0
Reserved					PLL2VCOSEL	PLL2RNG[1:0]		Reserved	PLL1VCOSEL	PLL1RNG[1:0]		Reserved	PLL0VCOSEL	PLL0RNG[1:0]	
					rw	rw			rw	rw			rw	rw	

Bits	Fields	Descriptions

31:18	Reserved	Must be kept at reset value.
17:16	PLLSEL[1:0]	PLLs clock source selection Set and reset by software to control the PLLs clock source. 00: CK_IRC64MDIV selected as source clock of PLL0, PLL1, PLL2 01: CK_LPIRC4M selected as source clock of PLL0, PLL1, PLL2 10: CK_HXTAL slected as source clock of PLL0, PLL1, PLL2 11: No clock selected as source clock of PLL0, PLL1, PLL2
15:11	Reserved	Must be kept at reset value.
10	PLL2VCOSEL	PLL2 VCO selection Set and reset by software when the PLL2 is disable. 0: select wide VCO, range: 192 - 836MHz 1: select narrow VCO, range: 150 - 420MHz
9:8	PLL2RNG[1:0]	PLL2 input clock range Set and reset by software when the PLL2 is disable. 00: input clock frequency: 1 - 2MHz 01: input clock frequency: 2 - 4MHz 10: input clock frequency: 4 - 8MHz 11: input clock frequency: 8 - 16MHz
7	Reserved	Must be kept at reset value.
6	PLL1VCOSEL	PLL1 VCO selection Set and reset by software when the PLL1 is disable. 0: select wide VCO, range: 192 - 836MHz 1: select narrow VCO, range: 150 - 420MHz
5:4	PLL1RNG[1:0]	PLL1 input clock range Set and reset by software when the PLL1 is disable. 00: input clock frequency: 1 - 2MHz 01: input clock frequency: 2 - 4MHz 10: input clock frequency: 4 - 8MHz 11: input clock frequency: 8 - 16MHz
3	Reserved	Must be kept at reset value.
2	PLL0VCOSEL	PLL0 VCO selection Set and reset by software when the PLL0 is disable. 0: select wide VCO, range: 192 - 836MHz 1: select narrow VCO, range: 150 - 420MHz
1:0	PLL0RNG[1:0]	PLL0 input clock range Set and reset by software when the PLL0 is disable.. 00: input clock frequency: 1 - 2MHz 01: input clock frequency: 2 - 4MHz 10: input clock frequency: 4 - 8MHz

11: input clock frequency: 8 - 16MHz

6.3.38. PLL0 fraction configuration register (RCU_PLL0FRA)

Address offset: 0x9C

Reset value: 0x0000 0000

This register can be accessed by byte (8-bit), half-word (16-bit) and word (32-bit).

31	30	29	28	27	26	25	24	23	22	21	20	19	18	17	16
Reserved															

15	14	13	12	11	10	9	8	7	6	5	4	3	2	1	0
PLL0FRAEN	Reserved		PLL0FRAN[12:0]												
rw			rw												

Bits	Fields	Descriptions
31:16	Reserved	Must be kept at reset value.
15	PLL0FRAEN	PLL0 fractional latch enable. These bits are set and reset by software. These bits can lock the PLL0FRAN value into a Sigma-Delta modulator .When PLL0FRAEN bit switchs from "0" to "1", the PLL0FRAN value will transfer to modulator.
14:13	Reserved	Must be kept at reset value.
12:0	PLL0FRAN[12:0]	Fractional part of the multiplication factor for PLL0 VCO These bits are set and reset by software. These bits can control the fractional part of the multiplication for PLL0 VCO. This bit field can be modified dynamically to fine-tune the PLL0 VCO. These bits must configure the PLL0 VCO out frequency to the following range: When PLL0VCOSEL = 0, the range is 192MHz to 836MHz; When PLL0VCOSEL = 1, the range is 150MHz to 420MHz.

6.3.39. PLL1 fraction configuration register (RCU_PLL1FRA)

Address offset: 0xA0

Reset value: 0x0000 0000

This register can be accessed by byte (8-bit), half-word (16-bit) and word (32-bit).

31	30	29	28	27	26	25	24	23	22	21	20	19	18	17	16
Reserved															

15	14	13	12	11	10	9	8	7	6	5	4	3	2	1	0
PLL1FRAEN	Reserved		PLL1FRAN[12:0]												

rw rw

Bits	Fields	Descriptions
31:16	Reserved	Must be kept at reset value.
15	PLL1FRAEN	PLL1 fractional latch enable. These bits are set and reset by software. These bits can lock the PLL1FRAN value into a Sigma-Delta modulator .When PLL1FRAEN bit switchs from "0" to "1", the PLL1FRAN value will transfer to modulator.
14:13	Reserved	Must be kept at reset value.
12:0	PLL1FRAN [12:0]	Fractional part of the multiplication factor for PLL1 VCO These bits are set and reset by software. These bits can control the fractional part of the multiplication for PLL1 VCO. This bit field can be modified dynamically to fine-tune the PLL1 VCO. These bits must configure the PLL1 VCO out frequency to the following range: When PLL1VCOSEL = 0, the range is 192MHz to 836MHz; When PLL1VCOSEL = 1, the range is 150MHz to 420MHz.

6.3.40. PLL2 fraction configuration register (RCU_PLL2FRA)

Address offset: 0xA4

Reset value: 0x0000 0000

This register can be accessed by byte (8-bit), half-word (16-bit) and word (32-bit).

31	30	29	28	27	26	25	24	23	22	21	20	19	18	17	16
Reserved															

15	14	13	12	11	10	9	8	7	6	5	4	3	2	1	0
PLL2FRAEN	Reserved		PLL2FRAN[12:0]												
rw			rw												

Bits	Fields	Descriptions
31:16	Reserved	Must be kept at reset value.
15	PLL2FRAEN	PLL2 fractional latch enable. These bits are set and reset by software. These bits can lock the PLL2FRAN value into a Sigma-Delta modulator .When PLL2FRAEN bit switchs from "0" to "1", the PLL2FRAN value will transfer to modulator.
14:13	Reserved	Must be kept at reset value.
12:0	PLL2FRAN[12:0]	Fractional part of the multiplication factor for PLL2 VCO These bits are set and reset by software. These bits can control the fractional part of the multiplication for PLL2 VCO. This bit field can be modified dynamically to fine-

tune the PLL2 VCO.

These bits must configure the PLL2 VCO out frequency to the following range: When PLL2VCOSEL = 0, the range is 192MHz to 836MHz; When PLL2VCOSEL = 1, the range is 150MHz to 420MHz.

6.3.41. Additional clock control register 0 (RCU_ADDCTL0)

Address offset: 0xC0

Reset value: 0x8000 0000

This register can be accessed by byte (8-bit), half-word (16-bit) and word (32-bit).

31	30	29	28	27	26	25	24	23	22	21	20	19	18	17	16
IRC48MCALIB[7:0]								Reserved						IRC48MSTB	IRC48MEN
r														r	rw

15	14	13	12	11	10	9	8	7	6	5	4	3	2	1	0
Reserved														PLL48MSEL	CK48MSEL
														rw	rw

Bits	Fields	Descriptions
31:24	IRC48MCALIB [7:0]	Internal 48MHz RC oscillator calibration value register These bits are load automatically at power on.
23:18	Reserved	Must be kept at reset value.
17	IRC48MSTB	Internal 48MHz RC oscillator clock stabilization Flag Set by hardware to indicate if the IRC48M oscillator is stable and ready for use. 0: IRC48M is not stable 1: IRC48M is stable
16	IRC48MEN	Internal 48MHz RC oscillator enable Set and reset by software. Reset by hardware when entering Deep-sleep or Standby mode. 0: IRC48M disable 1: IRC48M enable
15:2	Reserved	Must be kept at reset value.
1	PLL48MSEL	PLL48M clock selection Set and reset by software. This bit used to generate PLL48M clock which select CK_PLL0Q or CK_PLL2P clock. 0: Select CK_PLL0Q clock 1: Select CK_PLL2P clock
0	CK48MSEL	48MHz clock selection Set and reset by software. This bit used to generate CK48M clock which select

IRC48M clock or PLL48M clock. The CK48M clock used for TRNG/USBHS. The PLL48M clock refer to PLL48MSEL bit in RCU_ADDCTL register.

0: Don't select IRC48M clock (use CK_PLL0Q clock or CK_PLL2P clock select by PLL48MSEL)

1: Select IRC48M clock

6.3.42. Additional clock control register 1(RCU_ADDCTL1)

Address offset: 0xC4

Reset value: 0x0000 7080

This register can be accessed by byte (8-bit), half-word (16-bit) and word (32-bit).

31	30	29	28	27	26	25	24	23	22	21	20	19	18	17	16
PLLUSBHS1STB	PLLUSBHS1EN	PLLUSBHS0STB	PLLUSBHS0EN	Reserved							LPIRC4MDSPEN	Reserved		IRC64MDIV[1:0]	
r	rw	r	rw								rw			rw	

15	14	13	12	11	10	9	8	7	6	5	4	3	2	1	0
LPIRC4MCALIB[7:0]								LPIRC4MADJ[5:0]						LPIRC4MSTB	LPIRC4MEN
r								rw						r	rw

Bits	Fields	Descriptions
31	PLLUSBHS1STB	PLLUSBHS1 clock stabilization flag Set by hardware to indicate if the PLLUSBHS1 clock is stable and ready for use 0: PLLUSBHS1 clock is not stable 1: PLLUSBHS1 clock is stabilized
30	PLLUSBHS1EN	PLLUSBHS1 clock enable Set and reset by software. Reset by hardware when enter deep-sleep or standby mode. 0: Disabled PLLUSBHS1 clock 1: Enabled PLLUSBHS1 clock
29	PLLUSBHS0STB	PLLUSBHS0 clock stabilization flag Set by hardware to indicate if the PLLUSBHS0 clock is stable and ready for use 0: PLLUSBHS0 clock is not stable 1: PLLUSBHS0 clock is stabilized
28	PLLUSBHS0EN	PLLUSBHS0 clock enable Set and reset by software. Reset by hardware when enter deep-sleep or standby mode. 0: Disabled PLLUSBHS0 clock 1: Enabled PLLUSBHS0 clock
27:21	Reserved	Must be kept at reset value.

20	LPIRC4MDSPEN	LPIRC4M clock enable in deepsleep mode Set and reset by software. LPIRC4M can be forced on even in deepsleep mode to quickly be used as a kernel clock for some peripherals. This bit has no effect on the value of LPIRC4MEN. 0: Has no impact on LPIRC4M 1: Force LPIRC4M to run even in deepsleep mode
19:18	Reserved	Must be kept at reset value.
17:16	IRC64MDIV[1:0]	IRC64M clock divider Set and reset by software. It cannot be written when system clock select CK_IRC64MDIV or IRC64MEN is set. 00: CK_IRC64MDIV = CK_IRC64M / 1 01: CK_IRC64MDIV = CK_IRC64M / 2 10: CK_IRC64MDIV = CK_IRC64M / 4 11: CK_IRC64MDIV = CK_IRC64M / 8
15:8	LPIRC4MCALIB[7:0]	LPIRC4M calibration value These bits are load automatically at power on.The calibration signal step is 0.4%.
7:2	LPIRC4MADJ[5:0]	LPIRC4M frequency clock trim adjust value These bits are set by software. The trimming value is these bits (LPIRC4MADJ[) added to the LPIRC4MCALIB[7:0] bits. The trimming value should trim the LPIRC4MCALIB to 4 MHz ± 1%.
1	LPIRC4MSTB	LPIRC4M clock stabilization flag Set by hardware to indicate if the LPIRC4M oscillator is stable and ready for use. 0: LPIRC4M RC oscillator is not stable 1: LPIRC4M RC oscillator is stabilized
0	LPIRC4MEN	LPIRC4M clock enable Set and reset by software. This bit cannot be reset if the LPIRC4M clock is used as the system clock. If DSPWUSSEL = 1, set by hardware when leaving Deep-sleep mode. 0: LPIRC4M RC oscillator disabled 1: LPIRC4M RC oscillator enabled

6.3.43. Additional clock interrupt register (RCU_ADDINT)

Address offset: 0xCC

Reset value: 0x0000 0000

This register can be accessed by byte (8-bit), half-word (16-bit) and word (32-bit).

31	30	29	28	27	26	25	24	23	22	21	20	19	18	17	16
Reserved									IRC48MSTBIC	PLLUSBHS1STBIC	PLLUSBHS0STBIC	Reserved			

									w	w	w				
15	14	13	12	11	10	9	8	7	6	5	4	3	2	1	0
Reserved	IRC48MSTBIE	PLLUSBHS1STBIE	PLLUSBHS0STBIE	Reserved					IRC48MSTBIF	PLLUSBHS1STBIF	PLLUSBHS0STBIF	Reserved			
	rw	rw	rw						r	r	r				

Bits	Fields	Descriptions
31:23	Reserved	Must be kept at reset value.
22	IRC48MSTBIC	Internal 48 MHz RC oscillator Stabilization interrupt clear Write 1 by software to reset the IRC48MSTBIF flag. 0: Not reset IRC48MSTBIF flag 1: Reset IRC48MSTBIF flag
21	PLLUSBHS1STBIC	Internal PLL of USBHS1 Stabilization interrupt clear Write 1 by software to reset the PLLUSBHS1STBIF flag. 0: Not reset PLLUSBHS1STBIF flag 1: Reset PLLUSBHS1STBIF flag
20	PLLUSBHS0STBIC	Internal PLL of USBHS0 Stabilization interrupt clear Write 1 by software to reset the PLLUSBHS0STBIF flag. 0: Not reset PLLUSBHS0STBIF flag 1: Reset PLLUSBHS0STBIF flag
19:15	Reserved	Must be kept at reset value.
14	IRC48MSTBIE	Internal 48 MHz RC oscillator Stabilization interrupt enable Set and reset by software to enable/disable the IRC48M stabilization interrupt 0: Disable the IRC48M stabilization interrupt 1: Enable the IRC48M stabilization interrupt
13	PLLUSBHS1STBIE	Internal PLL of USBHS1 Stabilization interrupt enable Set and reset by software to enable/disable the USBHS1 PLL stabilization interrupt 0: Disable the USBHS1 PLL stabilization interrupt 1: Enable the USBHS1 PLL stabilization interrupt
12	PLLUSBHS0STBIE	Internal PLL of USBHS0 Stabilization interrupt enable Set and reset by software to enable/disable the USBHS0 PLL stabilization interrupt 0: Disable the USBHS0 PLL stabilization interrupt 1: Enable the USBHS0 PLL stabilization interrupt
11:7	Reserved	Must be kept at reset value.
6	IRC48MSTBIF	IRC48M stabilization interrupt flag Set by hardware when the Internal 48 MHz RC oscillator clock is stable and the IRC48MSTBIE bit is set. Reset by software when setting the IRC48MSTBIC bit.

		0: No IRC48M stabilization interrupt generated 1: IRC48M stabilization interrupt generated
5	PLLUSBHS1STBIF	Internal PLL of USBHS1 stabilization interrupt flag Set by hardware when the USBHS1 PLL clock is stable and the PLLUSBHS1STBIE bit is set. Reset by software when setting the PLLUSBHS1STBIC bit. 0: No USBHS1 PLL clock stabilization interrupt generated 1: USBHS1 PLL clock stabilization interrupt generated
4	PLLUSBHS0STBIF	Internal PLL of USBHS0 stabilization interrupt flag Set by hardware when the USBHS0 PLL clock is stable and the PLLUSBHS0STBIE bit is set. Reset by software when setting the PLLUSBHS0STBIC bit. 0: No USBHS0 PLL clock stabilization interrupt generated 1: USBHS0 PLL clock stabilization interrupt generated
3:0	Reserved	Must be kept at reset value.

6.3.44. Clock configuration register 4 (RCU_CFG4)

Address offset: 0xD0

Reset value: 0x0000 0000

This register can be accessed by byte (8-bit), half-word (16-bit) and word (32-bit).

31	30	29	28	27	26	25	24	23	22	21	20	19	18	17	16
Reserved															

15	14	13	12	11	10	9	8	7	6	5	4	3	2	1	0
Reserved						EXMCSEL[1:0]		Reserved							SDIO0SEL
						rw									rw

Bits	Fields	Descriptions
31:10	Reserved	Must be kept at reset value.
9:8	EXMCSEL[1:0]	EXMC clock source selection Set and reset by software to control the EXMC clock source 00: CK_AHB selected as EXMC source clock 01: CK_PLL0Q selected as EXMC source clock 10: CK_PLL1R selected as EXMC source clock 11: CK_PER selected as EXMC source clock
7:1	Reserved	Must be kept at reset value.
0	SDIO0SEL	SDIO0 clock source selection Set and reset by software to control the SDIO0 clock source.

0: CK_PLL0Q selected as SDIO0 source clock

1: CK_PLL1R selected as SDIO0 source clock

6.3.45. USB clock control register (RCU_USBCLKCTL)

Address offset: 0xD4

Reset value: 0x0000 0000

This register can be accessed by byte (8-bit), half-word (16-bit) and word (32-bit).

31	30	29	28	27	26	25	24	23	22	21	20	19	18	17	16
Reserved										USBHS1PSC[2:0]			USBHS0PSC[2:0]		
											rw			rw	

15	14	13	12	11	10	9	8	7	6	5	4	3	2	1	0
Reserved	USBHS148MSEL[1:0]		USBHS1SWEN	PLLUSBHS1PRESEL	Reserved	USBHS1SEL	Reserved		USBHS048MSEL[1:0]		USBHS0SWEN	PLLUSBHS0PRESEL	Reserved	USBHS0SEL	Reserved
	rw		rw	rw		rw			rw		rw	rw		rw	

Bits	Fields	Descriptions
31:22	Reserved	Must be kept at reset value.
21:19	USBHS1PSC[2:0]	USBHS1 clock prescaler selection Set and reset by software to control the USBHS1 clock prescaler value. The USBHS1 clock must be 48MHz. These bits can't be reset if the USBHS1 clock is enabled. 000: CK_USBHS1 = CK_PLL1Q / 1 001: CK_USBHS1 = CK_PLL1Q / 2 010: CK_USBHS1 = CK_PLL1Q / 3 011: CK_USBHS1 = CK_PLL1Q / 4 100: CK_USBHS1 = CK_PLL1Q / 5 101: CK_USBHS1 = CK_PLL1Q / 6 110 :CK_USBHS1 = CK_PLL1Q / 7 111 :CK_USBHS1 = CK_PLL1Q / 8
18:16	USBHS0PSC[2:0]	USBHS0 clock prescaler selection Set and reset by software to control the USBHS0 clock prescaler value. The USBHS0 clock must be 48MHz. These bits can't be reset if the USBHS0 clock is enabled. 000: CK_USBHS0 = CK_PLL1Q / 1 001: CK_USBHS0 = CK_PLL1Q / 2 010: CK_USBHS0 = CK_PLL1Q / 3 011: CK_USBHS0 = CK_PLL1Q / 4 100: CK_USBHS0 = CK_PLL1Q / 5 101: CK_USBHS0 = CK_PLL1Q / 6 110 :CK_USBHS0 = CK_PLL1Q / 7

		111 :CK_USBHS0 = CK_PLL1Q / 8
15	Reserved	Must be kept at reset value.
14:13	USBHS148MSEL[1:0]	USBHS1 48M clock source selection Set and reset by software. 00: CK_PLL0R selected as USBHS1 48M source clock 01: CK_PLLUSBHS1/USBHS1DV output clock selected as USBHS1 48M source clock 10: CK_PLL1Q/USBHS1PSC output selected as USBHS1 48M source clock 11: CK_IRC48M selected as USBHS1 48M source clock
12	USBHS1SWEN	USBHS1 clock source selection enable 0: Hardware switch USBHS1 clock by USBHS1 module 1: Use USBHS1SW to switch USBHS1 clock
11	PLLUSBHS1PRESEL	PLLUSBHS1 clock source preselection Set and reset by software. 0: CK_HATAL selected as PLLUSBHS1 source clock 1: CK_IRC48M selected as PLLUSBHS1 source clock
10	Reserved	Must be kept at reset value.
9	USBHS1SEL	USBHS1 clock source selection Set and reset by software. 0: 48M selected as USBHS1 source clock 1: 60M selected as USBHS1 source clock
8:7	Reserved	Must be kept at reset value.
6:5	USBHS048MSEL[1:0]	USBHS0 48M clock source selection Set and reset by software. 00: CK_PLL0R selected as USBHS0 48M source clock 01: CK_PLLUSBHS0/USBHS0DV selected as USBHS0 48M source clock 10: CK_PLL1Q/USBHS0PSC selected as USBHS0 48M source clock 11: CK_IRC48M selected as USBHS0 48M source clock
4	USBHS0SWEN	USBHS0 clock source selection enable 0: Hardware switch USBHS0 clock by USBHS0 module 1: Use USBHS0SW to switch USBHS0 clock
3	PLLUSBHS0PRESEL	PLLUSBHS0 clock source preselection Set and reset by software. 0: CK_HATAL selected as PLLUSBHS0 source clock 1: CK_IRC48M selected as PLLUSBHS0 source clock
2	Reserved	Must be kept at reset value.
1	USBHS0SEL	USBHS0 clock source selection Set and reset by software.

		0: 48M selected as USBHS0 source clock 1: 60M selected as USBHS0 source clock
0	Reserved	Must be kept at reset value.

6.3.46. PLLUSB configuration register (RCU_PLLUSBCFG)

Address offset: 0xD8

Reset value: 0x0000 0000

This register can be accessed by byte (8-bit), half-word (16-bit) and word (32-bit).

31	30	29	28	27	26	25	24	23	22	21	20	19	18	17	16
Reserved	PLLUSBHS1MF[6:0]							Reserved	USBHS1DV[2:0]			PLLUSBHS1PREDV[3:0]			
	rw								rw			rw			

15	14	13	12	11	10	9	8	7	6	5	4	3	2	1	0
Reserved	PLLUSBHS0MF[6:0]							Reserved	USBHS0DV[2:0]			PLLUSBHS0PREDV[3:0]			
	rw								rw			rw			

Bits	Fields	Descriptions
31	Reserved	Must be kept at reset value.
30:24	PLLUSBHS1MF[6:0]	The PLLUSBHS1 clock multiplication factor 0000000: Reserved 0000001: Reserved … 0001111: Reserved 0010000: PLLUSBHS1MF input source clock multiplied by 16 0010000: PLLUSBHS1MF input source clock multiplied by 17 0010010: PLLUSBHS1MF input source clock multiplied by 18 0010011: PLLUSBHS1MF input source clock multiplied by 19 … 1111111: PLLUSBHS1MF input source clock multiplied by 127 **Note:** The frequency of PLLUSBHS1 output clock is no more than 480MHz
23	Reserved	Must be kept at reset value.
22:20	USBHS1DV[2:0]	USBHS1 clock divider factor These bits are set and reset by software. 000: USBHS1DV input source clock divided by 2 001: USBHS1DV input source clock divided by 4 010: USBHS1DV input source clock divided by 6 … 111: USBHS1DV input source clock divided by 16
19:16	PLLUSBHS1PREDV[3:0]	PLLUSBHS1PREDV clock divide factor These bits are set and reset by software.

		0000: Reserved 0001: PLLUSBHS1PREDV input source clock divided by 1 0010: PLLUSBHS1PREDV input source clock divided by / 2 … 1111: PLLUSBHS1PREDV input source clock divided by / 15
15	Reserved	Must be kept at reset value.
14:8	PLLUSBHS0MF[6:0]	The PLLUSBHS0 clock multiplication factor 0000000: Reserved 0000001: Reserved … 0001111: Reserved 0010000: PLLUSBHS0MF input source clock multiplied by 16 0010000: PLLUSBHS0MF input source clock multiplied by 17 0010010: PLLUSBHS0MF input source clock multiplied by 18 0010011: PLLUSBHS0MF input source clock multiplied by 19 … 1111111: PLLUSBHS0MF input source clock multiplied by 127 **Note:** The frequency of PLLUSBHS0 output clock is no more than 480MHz
7	Reserved	Must be kept at reset value.
6:4	USBHS0DV[2:0]	USBHS0 clock divider factor These bits are set and reset by software. 000: USBHS0DV input source clock divided by 2 001: USBHS0DV input source clock divided by 4 010: USBHS0DV input source clock divided by 6 … 111: USBHS0DV input source clock divided by 16
3:0	PLLUSBHS0PREDV[3:0]	PLLUSBHS0PREDV clock divide factor These bits are set and reset by software. 0000: Reserved 0001: PLLUSBHS0PREDV input source clock divided by 1 0010: PLLUSBHS0PREDV input source clock divided by / 2 … 1111: PLLUSBHS0PREDV input source clock divided by / 15

6.3.47. APB2 additional reset register (RCU_ADDAPB2RST)

Address offset: 0xE0

Reset value: 0x0000 0000

This register can be accessed by byte (8-bit), half-word (16-bit) and word (32-bit).

31	30	29	28	27	26	25	24	23	22	21	20	19	18	17	16

Reserved

15	14	13	12	11	10	9	8	7	6	5	4	3	2	1	0
Reserved													CAN2RST	CAN1RST	CAN0RST
													rw	rw	rw

Bits	Fields	Descriptions
31:3	Reserved	Must be kept at reset value.
2	CAN2RST	CAN2 reset This bit is set and reset by software. 0: No reset 1: Reset CAN2 unit
1	CAN1RST	CAN1 reset This bit is set and reset by software. 0: No reset 1: Reset CAN1
0	CAN0RST	CAN0 reset This bit is set and reset by software. 0: No reset 1: Reset CAN0

6.3.48. APB2 additional enable register (RCU_ADDAPB2EN)

Address offset: 0xE4

Reset value: 0x0000 0000

This register can be accessed by byte (8-bit), half-word (16-bit) and word (32-bit).

31	30	29	28	27	26	25	24	23	22	21	20	19	18	17	16
Reserved															

15	14	13	12	11	10	9	8	7	6	5	4	3	2	1	0
Reserved													CAN2EN	CAN1EN	CAN0EN
													rw	rw	rw

Bits	Fields	Descriptions
31:3	Reserved	Must be kept at reset value.
2	CAN2EN	CAN2 clock enable This bit is set and reset by software. 0: Disable CAN2 clock 1: Enable CAN2 clock

1	CAN1EN	CAN1 clock enable This bit is set and reset by software. 0: Disable CAN1 clock 1: Enable CAN1 clock
0	CAN0EN	CAN0 clock enable This bit is set and reset by software. 0: Disable CAN0 clock 1: Enable CAN0 clock

6.3.49. APB2 additional sleep enable register (RCU_ADDAPB2SPEN)

Address offset: 0xE8

Reset value: 0x0000 0007

This register can be accessed by byte (8-bit), half-word (16-bit) and word (32-bit).

31	30	29	28	27	26	25	24	23	22	21	20	19	18	17	16
Reserved															

15	14	13	12	11	10	9	8	7	6	5	4	3	2	1	0
Reserved													CAN2SPEN	CAN1SPEN	CAN0SPEN
													rw	rw	rw

Bits	Fields	Descriptions
30:3	Reserved	Must be kept at reset value.
2	CAN2SPEN	CAN2 clock enable in sleep mode This bit is set and reset by software. 0: Disable CAN2 clock in sleep mode 1: Enable CAN2 clock in sleep mode
1	CAN1SPEN	CAN1 clock enable in sleep mode This bit is set and reset by software. 0: Disable CAN1 clock in sleep mode 1: Enable CAN1 clock in sleep mode
0	CAN0SPEN	CAN0 clock enable in sleep mode This bit is set and reset by software. 0: Disable CAN0 clock in sleep mode 1: Enable CAN0 clock in sleep mode

6.3.50. Clock configuration register 5 (RCU_CFG5)

Address offset: 0xF0

Reset value: 0x0000 0000

This register can be accessed by byte (8-bit), half-word (16-bit) and word (32-bit).

31	30	29	28	27	26	25	24	23	22	21	20	19	18	17	16
Reserved									SPI5SEL[2:0]			Reserved	SPI4SEL[2:0]		
										rw				rw	

15	14	13	12	11	10	9	8	7	6	5	4	3	2	1	0
Reserved	SPI3SEL[2:0]			Reserved	SPI2SEL[2:0]			Reserved	SPI1SEL[2:0]			Reserved	SPI0SEL[2:0]		
	rw				rw				rw				rw		

Bits	Fields	Descriptions
31:23	Reserved	Must be kept at reset value.
22:20	SPI5SEL[2:0]	SPI5 / I2S5 clock source selection Set and reset by software to control the SPI5 / I2S5 clock source 000: CK_APB2 selected as SPI5 / I2S5 source clock 001: CK_PLL1Q selected as SPI5 / I2S5 source clock 010: CK_PLL2Q selected as SPI5 / I2S5 source clock 011: CK_IRC64MDIV selected as SPI5 / I2S5 source clock 100: CK_LPIRC4M selected as SPI5 / I2S5 source clock 101: CK_HXTAL selected as SPI5 / I2S5 source clock 110: I2S_CKIN selected as SPI5 / I2S5 source clock 111: reserved
19	Reserved	Must be kept at reset value.
18:16	SPI4SEL[2:0]	SPI4 clock source selection Set and reset by software to control the SPI4 clock source 000: CK_APB2 selected as SPI4 source clock 001: CK_PLL1Q selected as SPI4 source clock 010: CK_PLL2Q selected as SPI4 source clock 011: CK_IRC64MDIV selected as SPI4 source clock 100: CK_LPIRC4M selected as SPI4 source clock 101: CK_HXTAL selected as SPI4 source clock others: reserved
15	Reserved	Must be kept at reset value.
14:12	SPI3SEL[2:0]	SPI3 clock source selection Set and reset by software to control the SPI3 clock source 000: CK_APB2 selected as SPI3 source clock 001: CK_PLL1Q selected as SPI3 source clock 010: CK_PLL2Q selected as SPI3 source clock 011: CK_IRC64MDIV selected as SPI3 source clock 100: CK_LPIRC4M selected as SPI3 source clock 101: CK_HXTAL selected as SPI3 source clock others: reserved

11	Reserved	Must be kept at reset value.
10:8	SPI2SEL[2:0]	SPI2 / I2S2 clock source selection Set and reset by software to control the SPI2 / I2S2 clock source 000: CK_PLL0Q selected as SPI2 / I2S2 source clock 001: CK_PLL1P selected as SPI2 / I2S2 source clock 010: CK_PLL2P selected as SPI2 / I2S2 source clock 011: I2S_CKIN selected as SPI2 / I2S2 source clock 100: CK_PER selected as SPI2 / I2S2 source clock others: reserved
7	Reserved	Must be kept at reset value.
6:4	SPI1SEL[2:0]	SPI1 / I2S1 clock source selection Set and reset by software to control the SPI1 / I2S1 clock source 000: CK_PLL0Q selected as SPI1 / I2S1 source clock 001: CK_PLL1P selected as SPI1 / I2S1 source clock 010: CK_PLL2P selected as SPI1 / I2S1 source clock 011: I2S_CKIN selected as SPI1 / I2S1 source clock 100: CK_PER selected as SPI1 / I2S1 source clock others: reserved
3	Reserved	Must be kept at reset value.
2:0	SPI0SEL[2:0]	SPI0 / I2S0 clock source selection Set and reset by software to control the SPI0 / I2S0 clock source 000: CK_PLL0Q selected as SPI0 / I2S0 source clock 001: CK_PLL1P selected as SPI0 / I2S0 source clock 010: CK_PLL2P selected as SPI0 / I2S0 source clock 011: I2S_CKIN selected as SPI0 / I2S0 source clock 100: CK_PER selected as SPI0 / I2S0 source clock others: reserved

7. Clock trim controller (CTC)

7.1. Overview

The Clock Trim Controller (CTC) is used to trim internal 48MHz RC oscillator (IRC48M) automatically by hardware. The CTC unit trim the frequency of the IRC48M based on an external accurate reference signal source. It can automatically adjust the trim value to provide a precise IRC48M clock.

7.2. Characteristics

- Two external reference signal sources: GPIO(CTC_SYNC) and LXTAL clock.
- Provide software reference sync pulse.
- Automatically trimmed by hardware without any software action.
- 16 bits trim counter with reference signal source capture and reload.
- 8 bits clock trim base value to frequency evaluation and automatically trim.
- Enough flag or interrupt to indicate the clock is OK (CKOKIF), warning (CKWARNIF) or error (ERRIF).

7.3. Function overview

Figure 7-1. CTC overview provides details on the internal configuration of the CTC.

Figure 7-1. CTC overview

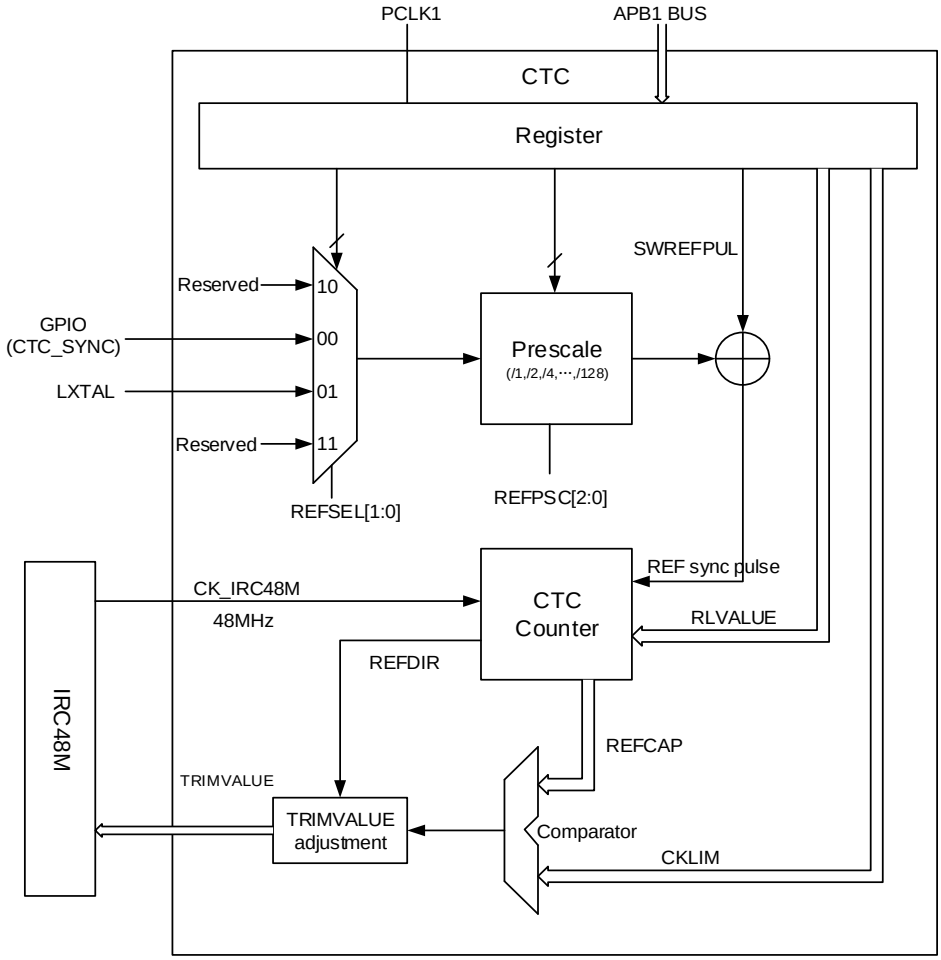

7.3.1. REF sync pulse generator

Firstly, the reference signal source can select GPIO(CTC_SYNC), or LXTAL clock by setting REFSEL bits in CTC_CTL1 register.

Secondly, the selected reference signal source use a configurable polarity by setting REFPOL bit in CTC_CTL1 register, and can be divided to a suitable frequency with a configurable prescaler by setting REFPSC bits in CTC_CTL1 register.

Thirdly, if a software reference pulse needed, write 1 to SWREFPUL bit in CTC_CTL0 register. The software reference pulse generated in last step is logical OR with the external reference pulse.

7.3.2. CTC trim counter

The CTC trim counter is clocked by CK_IRC48M. After CNTEN bit in CTC_CTL0 register set, and a first REF sync pulse detected, the counter start down-counting from RLVALUE (defined in CTC_CTL1 register). If any REF sync pulse detected, the counter reload the RLVALUE and start down-counting again. If no REF sync pulse detected, the counter down-count to zero,

and then up- counting to 128 x CKLIM (defined in CTC_CTL1 register), and then stop until next REF sync pulse detected. If any REF sync pulse detected, the current CTC trim counter value is captured to REFCAP in status register (CTC_STAT), and the counter direction is captured to REFDIR in status register (CTC_STAT). The detail is showing in ***Figure 7-2. CTC trim counter***.

Figure 7-2. CTC trim counter

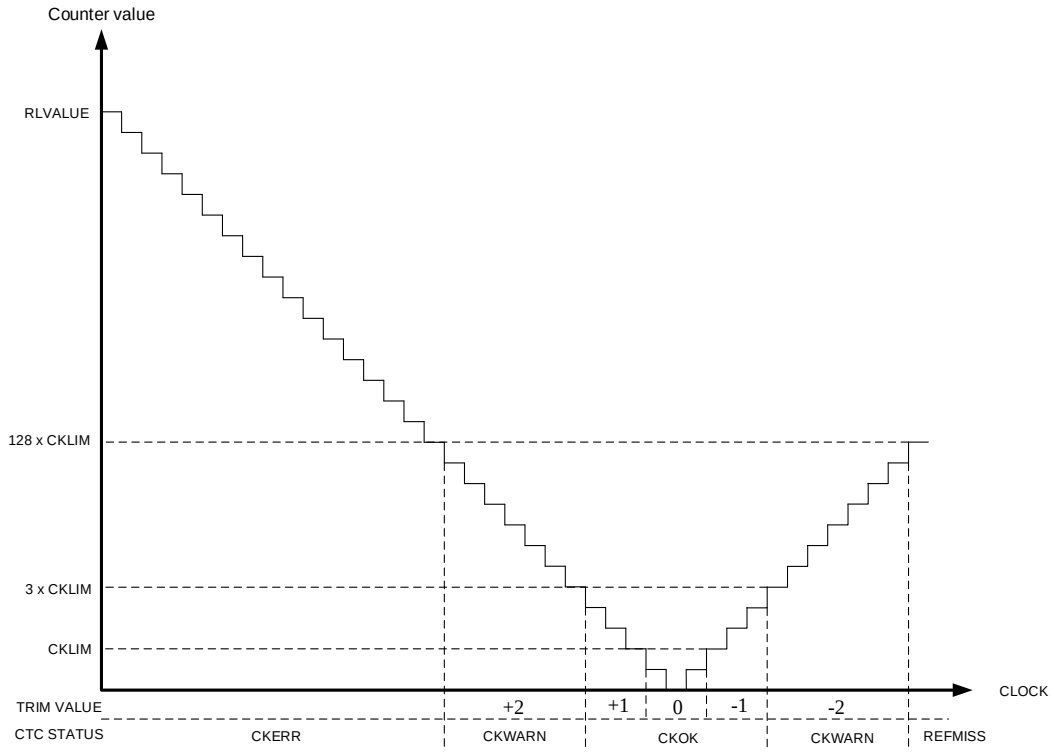

7.3.3. Frequency evaluation and automatically trim process

The clock frequency evaluation is performed when a REF sync pulse occur. If a REF sync pulse occurs on down-counting, it means the current clock is slower than correct clock (the frequency of 48M).It needs to improve TRIMVALUE in CTC_CTL0 register. If a REF sync pulse occurs on up-counting, it means the current clock is faster than correct clock (the frequency of 48M).It needs to reduce TRIMVALUE in CTC_CTL0 register. The CKOKIF, CKWARNIF, CKERR and REFMISS in CTC_STAT register shows the frequency evaluation scope.

If the AUTOTRIM bit in CTC_CTL0 register is setting, the automatically hardware trim mode enabled. In this mode, if a REF sync pulse occurs on down-counting, it means the current clock is slower than correct clock, the TRIMVALUE will be increased automatically to raise the clock frequency. Vice versa when it occurs on up-counting, the TRIMVALUE will be reduced automatically to reduce the clock frequency.

- Counter < CKLIM when REF sync pulse is detected.

  The CKOKIF in CTC_STAT register set, and an interrupt generated if CKOKIE bit in

CTC_CTL0 register is 1.

If the AUTOTRIM bit in CTC_CTL0 register set, the TRIMVALUE in CTC_CTL0 register is not changed.

- CKLIM ≤ Counter < 3 x CKLIM when REF sync pulse is detected.

  The CKOKIF in CTC_STAT register set, and an interrupt generated if CKOKIE bit in CTC_CTL0 register is 1.

  If the AUTOTRIM bit in CTC_CTL0 register set, the TRIMVALUE in CTC_CTL0 register add 1 when down-counting or sub 1 when up-counting.

- 3 x CKLIM ≤ Counter < 128 x CKLIM when REF sync pulse is detected.

  The CKWARNIF in CTC_STAT register set, and an interrupt generated if CKWARNIE bit in CTC_CTL0 register is 1.

  If the AUTOTRIM bit in CTC_CTL0 register set, the TRIMVALUE in CTC_CTL0 register add 2 when down-counting or sub 2 when up-counting.

- Counter ≥ 128 x CKLIM when down-counting when a REF sync pulse is detected.

  The CKERR in CTC_STAT register set, and an interrupt generated if ERRIE bit in CTC_CTL0 register is 1.

  The TRIMVALUE in CTC_CTL0 register is not changed

- Counter = 128 x CKLIM when up-counting.

  The REFMISS in CTC_STAT register set, and an interrupt generated if ERRIE bit in CTC_CTL0 register is 1.

  The TRIMVALUE in CTC_CTL0 register is not changed.

If adjusting the TRIMVALUE in CTC_CTL0 register over the value of 63, the overflow will be occurred, while adjusting the TRIMVALUE under the value of 0, the underflow will be occurred. The TRIMVALUE is in the range 0 to 63 (the TRIMVALUE is 63 if overflow, the TRIMVALUE is 0 if underflow). Then, the TRIMERR in CTC_STAT register will be set, and an interrupt generated if ERRIE bit in CTC_CTL0 register is 1.

7.3.4. Software program guide

The RLVALUE and CKLIM bits in CTC_CTL1 register is critical to evaluate the clock frequency and automatically hardware trim. The value is calculated by the correct clock frequency (IRC48M:48 MHz) and the frequency of REF sync pulse. The ideal case is REF sync pulse occur when the CTC counter is zero, so the RLVALUE is:

$$RLVALUE = (F_{clock} \div F_{REF}) - 1 \quad (7\text{-}1)$$

The CKLIM is set by user according to the clock accuracy. It is recommend to set to the half of the step size, so the CKLIM is:

$$RLVALUE = (F_{clock} \div F_{REF}) - 1 \quad (7\text{-}2)$$

The typical step size is 0.12%. Where the F_{clock} is the frequency of correct clock (IRC48M), the F_{REF} is the frequency of reference sync pulse.

7.4. Register definition

CTC base address: 0x4000 8400

7.4.1. Control register 0 (CTC_CTL0)

Address offset: 0x00

Reset value: 0x0000 2000

This register has to be accessed by word (32-bit)

31	30	29	28	27	26	25	24	23	22	21	20	19	18	17	16
Reserved															

15	14	13	12	11	10	9	8	7	6	5	4	3	2	1	0
Reserved		TRIMVALUE[5:0]						SWREF PUL	AUTO TRIM	CNTEN	Reserved	EREFIE	ERRIE	CKWARN IE	CKOKIE
		rw						w	rw	rw		rw	rw	rw	rw

Bits	Fields	Descriptions
31:14	Reserved	Must be kept at reset value.
13:8	TRIMVALUE[5:0]	IRC48M trim value When AUTOTRIM in CTC_CTL0 register is 0, these bits are set and cleared by software. This mode used to software calibration. When AUTOTRIM in CTC_CTL0 register is 1, these bits are read only. The value automatically modified by hardware. This mode used to hardware trim. The middle value is 32. When increase 1, the IRC48M clock frequency add around 57KHz. When decrease 1, the IRC48M clock frequency sub around 57KHz.
7	SWREFPUL	Software reference source sync pulse This bit is set by software, and generates a reference sync pulse to CTC counter. This bit is cleared by hardware automatically and read as 0. 0: No effect 1: generates a software reference source sync pulse
6	AUTOTRIM	Hardware automatically trim mode This bit is set and cleared by software. When this bit is set, the hardware automatic trim enabled, the TRIMVALUE bits in CTC_CTL0 register are modified by hardware automatically, until the frequency of IRC48M clock is close to 48MHz. 0: Hardware automatic trim disabled 1: Hardware automatic trim enabled
5	CNTEN	CTC counter enable This bit is set and cleared by software. This bit used to enable or disable the CTC trim counter. When this bit is set, the CTC_CTL1 register cannot be modified.

		0: CTC trim counter disabled 1: CTC trim counter enabled.
4	Reserved	Must be kept at reset value.
3	EREFIE	EREFIF interrupt enable 0: EREFIF interrupt disable 1: EREFIF interrupt enable
2	ERRIE	Error (ERRIF) interrupt enable 0: ERRIF interrupt disable 1: ERRIF interrupt enable
1	CKWARNIE	Clock trim warning (CKWARNIF) interrupt enable 0: CKWARNIF interrupt disable 1: CKWARNIF interrupt enable
0	CKOKIE	Clock trim OK (CKOKIF) interrupt enable 0: CKOKIF interrupt disable 1: CKOKIF interrupt enable

7.4.2. Control register 1 (CTC_CTL1)

Address offset: 0x04

Reset value: 0x2022 BB7F

This register has to be accessed by word (32-bit). This register cannot be modified when CNTEN is 1.

31	30	29	28	27	26	25	24	23	22	21	20	19	18	17	16
REFPOL	Reserved	REFSEL[1:0]		Reserved	REFPSC[2:0]			CKLIM[7:0]							
rw		rw			rw			rw							

15	14	13	12	11	10	9	8	7	6	5	4	3	2	1	0
RLVALUE[15:0]															
rw															

Bits	Fields	Descriptions
31	REFPOL	Reference signal source polarity This bit is set and cleared by software to select reference signal source polarity 0: rising edge selected 1: falling edge selected
30	Reserved	Must be kept at reset value.
29:28	REFSEL[1:0]	Reference signal source selection These bits are set and cleared by software to select reference signal source. 00: GPIO(CTC_SYNC) selected

		01: LXTAL clock selected Other values are reserved.
27	Reserved	Must be kept at reset value.
26:24	REFPSC[2:0]	Reference signal source prescaler These bits are set and cleared by software 000: Reference signal not divided 001: Reference signal divided by 2 010: Reference signal divided by 4 011: Reference signal divided by 8 100: Reference signal divided by 16 101: Reference signal divided by 32 110: Reference signal divided by 64 111: Reference signal divided by 128
23:16	CKLIM[7:0]	Clock trim base limit value These bits are set and cleared by software to define the clock trim base limit value. These bits used to frequency evaluation and automatically trim process. Please refer to the ***Frequency evaluation and automatically trim process*** for detail.
15:0	RLVALUE[15:0]	CTC counter reload value These bits are set and cleared by software to define the CTC counter reload value. These bits reload to CTC trim counter when a reference sync pulse received to start or restart the counter.

7.4.3. Status register (CTC_STAT)

Address offset: 0x08

Reset value: 0x0000 0000

This register has to be accessed by word (32-bit).

31	30	29	28	27	26	25	24	23	22	21	20	19	18	17	16
REFCAP[15:0]															
r															

15	14	13	12	11	10	9	8	7	6	5	4	3	2	1	0
REFDIR	Reserved				TRIM ERR	REF MISS	CKERR	Reserved				EREFIF	ERRIF	CKWARN IF	CKOK IF
r					r	r	r					r	r	r	r

Bits	Fields	Descriptions
31:16	REFCAP[15:0]	CTC counter capture when reference sync pulse. When a reference sync pulse occurred, the CTC trim counter value is captured to REFCAP bits.
15	REFDIR	CTC trim counter direction when reference sync pulse

		When a reference sync pulse occurred during the counter is working, the CTC trim counter direction is captured to REFDIR bit. 0: Up-counting 1: Down-counting
14:11	Reserved	Must be kept at reset value.
10	TRIMERR	Trim value error bit This bit is set by hardware when the TRIMVALUE in CTC_CTL0 register overflow or underflow. When the ERRIE in CTC_CTL0 register is set, an interrupt occur. This bit is cleared by writing 1 to ERRIC bit in CTC_INTC register. 0: No trim value error occur 1: Trim value error occur
9	REFMISS	Reference sync pulse miss This bit is set by hardware when the reference sync pulse miss. This is occur when the CTC trim counter reach to 128 x CKLIM during up counting and no reference sync pulse detected. This means the clock is too fast to be trimmed to correct frequency or other error occur. When the ERRIE in CTC_CTL0 register is set, an interrupt occur. This bit is cleared by writing 1 to ERRIC bit in CTC_INTC register. 0: No Reference sync pulse miss occur 1: Reference sync pulse miss occur
8	CKERR	Clock trim error bit This bit is set by hardware when the clock trim error occur. This is occur when the CTC trim counter greater or equal to 128 x CKLIM during down counting when a reference sync pulse detected. This means the clock is too slow and cannot be trimmed to correct frequency. When the ERRIE in CTC_CTL0 register is set, an interrupt occur. This bit is cleared by writing 1 to ERRIC bit in CTC_INTC register. 0: No Clock trim error occur 1: Clock trim error occur
7:4	Reserved	Must be kept at reset value.
3	EREFIF	Expect reference interrupt flag This bit is set by hardware when the CTC counter reach to 0. When the EREFIE in CTC_CTL0 register is set, an interrupt occur. This bit is cleared by writing 1 to EREFIC bit in CTC_INTC register. 0 : No Expect reference occur 1: Expect reference occur
2	ERRIF	Error interrupt flag This bit is set by hardware when an error occurred. If any error of TRIMERR, REFMISS or CKERR occurred, this bit will be set. When the ERRIE in CTC_CTL0 register is set, an interrupt occur. This bit is cleared by writing 1 to ERRIC bit in CTC_INTC register. 0 : No Error occur

		1: An error occur
1	CKWARNIF	Clock trim warning interrupt flag This bit is set by hardware when a clock trim warning occurred. If the CTC trim counter greater or equal to 3 x CKLIM and smaller to 128 x CKLIM when a reference sync pulse detected, this bit will be set. This means the clock is too slow or too fast, but can be trim to correct frequency. The TRIMVALUE add 2 or sub 2 when a clock trim warning occurred. When the CKWARNIE in CTC_CTL0 register is set, an interrupt occur. This bit is cleared by writing 1 to CKWARNIC bit in CTC_INTC register. 0 : No Clock trim warning occur 1: Clock trim warning occur
0	CKOKIF	Clock trim OK interrupt flag This bit is set by hardware when the clock trim is OK. If the CTC trim counter smaller to 3 x CKLIM when a reference sync pulse detected, this bit will be set. This means the clock is OK to use. The TRIMVALUE need not to adjust or adjust one step. When the CKOKIE in CTC_CTL0 register is, an interrupt occur. This bit is cleared by writing 1 to CKOKIC bit in CTC_INTC register. 0 : No Clock trim OK occur 1: Clock trim OK occur

7.4.4. Interrupt clear register (CTC_INTC)

Address offset: 0x0C

Reset value: 0x0000 0000

This register has to be accessed by word (32-bit).

31	30	29	28	27	26	25	24	23	22	21	20	19	18	17	16
Reserved															

15	14	13	12	11	10	9	8	7	6	5	4	3	2	1	0
Reserved												EREFIC	ERRIC	CKWARNIC	CKOKIC
												w	w	w	w

Bits	Fields	Descriptions
31:4	Reserved	Must be kept at reset value.
3	EREFIC	EREFIF interrupt clear bit This bit is written by software and read as 0. Write 1 to clear EREFIF bit in CTC_STAT register. Write 0 is no effect.
2	ERRIC	ERRIF interrupt clear bit This bit is written by software and read as 0. Write 1 to clear ERRIF, TRIMERR,

		REFMISS and CKERR bits in CTC_STAT register. Write 0 is no effect.
1	CKWARNIC	CKWARNIF interrupt clear bit This bit is written by software and read as 0. Write 1 to clear CKWARNIF bit in CTC_STAT register. Write 0 is no effect.
0	CKOKIC	CKOKIF interrupt clear bit This bit is written by software and read as 0. Write 1 to clear CKOKIF bit in CTC_STAT register. Write 0 is no effect.

8. Interrupt / event controller (EXTI)

8.1. Overview

Cortex®-M7 integrates the Nested Vectored Interrupt Controller (NVIC) for efficient exception and interrupts processing. NVIC facilitates low-latency exception and interrupt handling and power management controls. It's tightly coupled to the processer core. More details about NVIC could refer to the technical reference manual of Cortex®-M7.

EXTI (interrupt / event controller) contains up to 38 independent edge detectors and generates interrupt requests or events to the processer. The EXTI has three trigger types: rising edge, falling edge and both edges. Each edge detector in the EXTI can be configured and masked independently.

8.2. Characteristics

- Cortex®-M7 system exception.
- Up to 217 maskable peripheral interrupts (don't contain the 16 interrupts of Cortex®-M7 with FPU).
- 4 bits interrupt priority configuration—16 priority levels.
- Efficient interrupt processing.
- Support exception pre-emption and tail-chaining.
- Wake up system from power saving mode.
- Up to 38 independent edge detectors in EXTI.
- Three trigger types: rising, falling and both edges.
- Software interrupt or event trigger.
- Trigger sources configurable.

8.3. Interrupts function overview

The Arm® Cortex®-M7 processor and the Nested Vectored Interrupt Controller (NVIC) prioritize and handle all exceptions in Handler Mode. The processor state is automatically stored to the stack on an exception and automatically restored from the stack at the end of the Interrupt Service Routine (ISR).

The vector is fetched in parallel to the state saving, enabling efficient interrupt entry. The processor supports tail-chaining, which enables back-to-back interrupts to be performed without the overhead of state saving and restoration. The following tables list all exception types.

Table 8-1. NVIC exception types in Cortex®-M7

Exception type	Vector number	Priority (a)	Vector address	Description
-	0	-	0x0000_0000	Reserved
Reset	1	-3	0x0000_0004	Reset
NMI	2	-2	0x0000_0008	Non maskable interrupt.
HardFault	3	-1	0x0000_000C	All class of fault
MemManage	4	Programmable	0x0000_0010	Memory management
BusFault	5	Programmable	0x0000_0014	Prefetch fault, memory access fault
UsageFault	6	Programmable	0x0000_0018	Undefined instruction or illegal state
-	7-10	-	0x0000_001C - 0x0000_002B	Reserved
SVCall	11	Programmable	0x0000_002C	System service call via SWI instruction
Debug Monitor	12	Programmable	0x0000_0030	Debug monitor
-	13	-	0x0000_0034	Reserved
PendSV	14	Programmable	0x0000_0038	Pendable request for system service
SysTick	15	Programmable	0x0000_003C	System tick timer

The SysTick calibration value is fixed to 1000 and SysTick clock source is from CK_SYS or CK_SYS/2. The SYST_RVR register is configured to provide a 1ms time-base for the system. When SysTick clock source is from CK_SYS (CK_SYS=a MHz), the SYST_RVR register value is set to (a*1000-1). When the SysTick clock source is from CK_SYS/2, the SYST_RVR register value is set to (a/2*1000-1).

Table 8-2. Interrupt vector table

Interrupt number	Vector number	Peripheral interrupt description	Vector address
IRQ 0	16	WWDGT interrupt	0x0000_0040
IRQ 1	17	VAVD/LVD/VOVD through EXTI line detection interrupt	0x0000_0044
IRQ 2	18	RTC tamper and timestamp from EXTI Interrupt, LXTAL clock stuck interrupt	0x0000_0048
IRQ 3	19	RTC wakeup from EXTI interrupt	0x0000_004C
IRQ 4	20	FMC global interrupt	0x0000_0050
IRQ 5	21	RCU global interrupt	0x0000_0054
IRQ 6	22	EXTI line0 interrupt	0x0000_0058
IRQ 7	23	EXTI line1 interrupt	0x0000_005C
IRQ 8	24	EXTI line2 interrupt	0x0000_0060
IRQ 9	25	EXTI line3 interrupt	0x0000_0064
IRQ 10	26	EXTI line4 interrupt	0x0000_0068

Interrupt number	Vector number	Peripheral interrupt description	Vector address
IRQ 11	27	DMA0 channel0 global interrupt	0x0000_006C
IRQ 12	28	DMA0 channel1 global interrupt	0x0000_0070
IRQ 13	29	DMA0 channel2 global interrupt	0x0000_0074
IRQ 14	30	DMA0 channel3 global interrupt	0x0000_0078
IRQ 15	31	DMA0 channel4 global interrupt	0x0000_007C
IRQ 16	32	DMA0 channel5 global interrupt	0x0000_0080
IRQ 17	33	DMA0 channel6 global interrupt	0x0000_0084
IRQ 18	34	ADC0 and ADC1 global interrupt	0x0000_0088
IRQ 19-22	35-38	Reserved	0x0000_008C-0x0000_0098
IRQ 23	39	EXTI line5-9 interrupt	0x0000_009C
IRQ 24	40	TIMER0 break interrupt	0x0000_00A0
IRQ 25	41	TIMER0 update interrupt	0x0000_00A4
IRQ 26	42	TIMER0 trigger and commutation interrupt	0x0000_00A8
IRQ 27	43	TIMER0 capture compare interrupt	0x0000_00AC
IRQ 28	44	TIMER1 global interrupt	0x0000_00B0
IRQ 29	45	TIMER2 global interrupt	0x0000_00B4
IRQ 30	46	TIMER3 global interrupt	0x0000_00B8
IRQ 31	47	I2C0 event interrupt	0x0000_00BC
IRQ 32	48	I2C0 error interrupt	0x0000_00C0
IRQ 33	49	I2C1 event interrupt	0x0000_00C4
IRQ 34	50	I2C1 error interrupt	0x0000_00C8
IRQ 35	51	SPI0 global interrupt	0x0000_00CC
IRQ 36	52	SPI1 global interrupt	0x0000_00D0
IRQ 37	53	USART0 global and wakeup interrupt	0x0000_00D4
IRQ 38	54	USART1 global and wakeup interrupt	0x0000_00D8
IRQ 39	55	USART2 global and wakeup interrupt	0x0000_00DC
IRQ 40	56	EXTI line10-15 interrupt	0x0000_00E0
IRQ 41	57	RTC alarm from EXTI interrupt	0x0000_00E4
IRQ 42	58	Reserved	0x0000_00E8
IRQ 43	59	TIMER7 break interrupt	0x0000_00EC
IRQ 44	60	TIMER7 update interrupt	0x0000_00F0
IRQ 45	61	TIMER7 trigger and commutation interrupt	0x0000_00F4
IRQ 46	62	TIMER7 capture compare interrupt	0x0000_00F8
IRQ 47	63	DMA0 channel7 global interrupt	0x0000_00FC
IRQ 48	64	EXMC global interrupt	0x0000_0100
IRQ 49	65	SDIO0 global interrupt	0x0000_0104
IRQ 50	66	TIMER4 global interrupt	0x0000_0108
IRQ 51	67	SPI2 global interrupt	0x0000_010C
IRQ 52	68	UART3 global interrupt	0x0000_0110

Interrupt number	Vector number	Peripheral interrupt description	Vector address
IRQ 53	69	UART4 global interrupt	0x0000_0114
IRQ 54	70	TIMER5 global interrupt and DAC underrun error interrupt	0x0000_0118
IRQ 55	71	TIMER6 global interrupt	0x0000_011C
IRQ 56	72	DMA1 channel 0 global interrupt	0x0000_0120
IRQ 57	73	DMA1 channel 1 global interrupt	0x0000_0124
IRQ 58	74	DMA1 channel 2 global interrupt	0x0000_0128
IRQ 59	75	DMA1 channel 3 global interrupt	0x0000_012C
IRQ 60	76	DMA1 channel 4 global interrupt	0x0000_0130
IRQ 61	77	Ethernet0 global interrupt	0x0000_0134
IRQ 62	78	Ethernet0 wakeup from EXTI interrupt	0x0000_0138
IRQ 63-67	79-83	Reserved	0x0000_013C-0x0000_014C
IRQ 68	84	DMA1 channel 5 global interrupt	0x0000_0150
IRQ 69	85	DMA1 channel 6 global interrupt	0x0000_0154
IRQ 70	86	DMA1 channel 7 global interrupt	0x0000_0158
IRQ 71	87	USART5 global and wakeup interrupt	0x0000_015C
IRQ 72	88	I2C2 event interrupt	0x0000_0160
IRQ 73	89	I2C2 error interrupt	0x0000_0164
IRQ 74	90	USBHS0 endpoint 1 out interrupt	0x0000_0168
IRQ 75	91	USBHS0 endpoint 1 in interrupt	0x0000_016C
IRQ 76	92	USBHS0 wakeup from EXTI interrupt	0x0000_0170
IRQ 77	93	USBHS0 global interrupt	0x0000_0174
IRQ 78	94	DCI global interrupt	0x0000_0178
IRQ 79	95	CAU global interrupt	0x0000_017C
IRQ 80	96	HAU and TRNG global interrupt	0x0000_0180
IRQ 81	97	FPU global interrupt	0x0000_0184
IRQ 82	98	UART6 global interrupt	0x0000_0188
IRQ 83	99	UART7 global interrupt	0x0000_018C
IRQ 84	100	SPI3 global interrupt	0x0000_0190
IRQ 85	101	SPI4 global interrupt	0x0000_0194
IRQ 86	102	SPI5 global interrupt	0x0000_0198
IRQ 87	103	SAI0 global interrupt	0x0000_019C
IRQ 88	104	TLI global interrupt	0x0000_01A0
IRQ 89	105	TLI error interrupt	0x0000_01A4
IRQ 90	106	IPA global interrupt	0x0000_01A8
IRQ 91	107	SAI1 global interrupt	0x0000_01AC
IRQ 92	108	OSPI0 global interrupt	0x0000_01B0
IRQ 93-94	109-110	Reserved	0x0000_01B4-0x0000_01B8

Interrupt number	Vector number	Peripheral interrupt description	Vector address
IRQ 95	111	I2C3 event interrupt	0x0000_01BC
IRQ 96	112	I2C3 error interrupt	0x0000_01C0
IRQ 97	113	RSPDIF global interrupt	0x0000_01C4
IRQ 98-101	114-117	Reserved	0x0000_01C8-0x0000_01D4
IRQ 102	118	DMAMUX overrun interrupt	0x0000_01D8
IRQ 103-109	119-125	Reserved	0x0000_01DC-0x0000_01F4
IRQ 110	126	HPDF global interrupt 0	0x0000_01F8
IRQ 111	127	HPDF global interrupt 1	0x0000_01FC
IRQ 112	128	HPDF global interrupt 2	0x0000_0200
IRQ 113	129	HPDF global interrupt 3	0x0000_0204
IRQ 114	130	SAI2 global interrupt	0x0000_0208
IRQ 115	131	Reserved	0x0000_020C
IRQ 116	132	TIMER14 global interrupt	0x0000_0210
IRQ 117	133	TIMER15 global interrupt	0x0000_0214
IRQ 118	134	TIMER16 global interrupt	0x0000_0218
IRQ 119	135	Reserved	0x0000_021C
IRQ 120	136	MDIO global interrupt	0x0000_0220
IRQ 121	137	Reserved	0x0000_0224
IRQ 122	138	MDMA global interrupt	0x0000_0228
IRQ 123	139	Reserved	0x0000_022C
IRQ 124	140	SDIO1 global interrupt	0x0000_0230
IRQ 125	141	HWSEM global interrupt	0x0000_0234
IRQ 126	142	Reserved	0x0000_0238
IRQ 127	143	ADC2 global interrupt	0x0000_023C
IRQ 128-136	144-152	Reserved	0x0000_0240-0x0000_0260
IRQ 137	153	CMP0 and CMP1 global interrupt, CMP0 and CMP1 through EXTI line detection interrupt	0x0000_0264
IRQ 138-143	154-159	Reserved	0x0000_0268-0x0000_027C
IRQ 144	160	CTC interrupt	0x0000_0280
IRQ 145	161	RAMECCMU global interrupt	0x0000_0284
IRQ 146-149	162-165	Reserved	0x0000_0288-0x0000_0294
IRQ 150	166	OSPI1 global interrupt	0x0000_0298
IRQ 151	167	RTDEC0 global interrupt	0x0000_029C
IRQ 152	168	RTDEC1 global interrupt	0x0000_02A0
IRQ 153	169	FAC global interrupt	0x0000_02A4

Interrupt number	Vector number	Peripheral interrupt description	Vector address
IRQ 154	170	TMU global interrupt	0x0000_02A8
IRQ 155-160	171-176	Reserved	0x0000_02AC-0x0000_02C0
IRQ 161	177	TIMER22 global interrupt	0x0000_02C4
IRQ 162	178	TIMER23 global interrupt	0x0000_02C8
IRQ 163	179	TIMER30 global interrupt	0x0000_02CC
IRQ 164	180	TIMER31 global interrupt	0x0000_02D0
IRQ 165	181	TIMER40 global interrupt	0x0000_02D4
IRQ 166	182	TIMER41 global interrupt	0x0000_02D8
IRQ 167	183	TIMER42 global interrupt	0x0000_02DC
IRQ 168	184	TIMER43 global interrupt	0x0000_02E0
IRQ 169	185	TIMER44 global interrupt	0x0000_02E4
IRQ 170	186	TIMER50 global interrupt	0x0000_02E8
IRQ 171	187	TIMER51 global interrupt	0x0000_02EC
IRQ 172	188	USBHS1 endpoint 1 out interrupt	0x0000_02F0
IRQ 173	189	USBHS1 endpoint 1 in interrupt	0x0000_02F4
IRQ 174	190	USBHS1 wakeup from EXTI interrupt	0x0000_02F8
IRQ 175	191	USBHS1 global interrupt	0x0000_02FC
IRQ 176	192	Ethernet1 global interrupt	0x0000_0300
IRQ 177	193	Ethernet1 wakeup from EXTI interrupt	0x0000_0304
IRQ 178	194	Reserved	0x0000_0308
IRQ 179	195	CAN0 wakeup through EXTI line detection interrupt	0x0000_030C
IRQ 180	196	CAN0 interrupt for message buffer	0x0000_0310
IRQ 181	197	CAN0 interrupt for Bus off / Bus off done	0x0000_0314
IRQ 182	198	CAN0 interrupt for Error	0x0000_0318
IRQ 183	199	CAN0 interrupt for Error in fast transmission	0x0000_031C
IRQ 184	200	CAN0 interrupt for Transmit warning	0x0000_0320
IRQ 185	201	CAN0 interrupt for Receive warning	0x0000_0324
IRQ 186	202	CAN1 wakeup through EXTI line detection interrupt	0x0000_0328
IRQ 187	203	CAN1 interrupt for message buffer	0x0000_032C
IRQ 188	204	CAN1 interrupt for Bus off / Bus off done	0x0000_0330
IRQ 189	205	CAN1 interrupt for Error	0x0000_0334
IRQ 190	206	CAN1 interrupt for Error in fast transmission	0x0000_0338
IRQ 191	207	CAN1 interrupt for Transmit warning	0x0000_033C
IRQ 192	208	CAN1 interrupt for Receive warning	0x0000_0340
IRQ 193	209	CAN2 wakeup through EXTI line detection interrupt	0x0000_0344
IRQ 194	210	CAN2 interrupt for message buffer	0x0000_0348

Interrupt number	Vector number	Peripheral interrupt description	Vector address
IRQ 195	211	CAN2 interrupt for Bus off / Bus off done	0x0000_034C
IRQ 196	212	CAN2 interrupt for Error	0x0000_0350
IRQ 197	213	CAN2 interrupt for Error in fast transmission	0x0000_0354
IRQ 198	214	CAN2 interrupt for Transmit warning	0x0000_0358
IRQ 199	215	CAN2 interrupt for Receive warning	0x0000_035C
IRQ 200	216	EFUSE global interrupt	0x0000_0360
IRQ 201	217	I2C0 wakeup through EXTI line detection interrupt	0x0000_0364
IRQ 202	218	I2C1 wakeup through EXTI line detection interrupt	0x0000_0368
IRQ 203	219	I2C2 wakeup through EXTI line detection interrupt	0x0000_036C
IRQ 204	220	I2C3 wakeup through EXTI line detection interrupt	0x0000_0370
IRQ 205	221	LPDTS interrupt	0x0000_0374
IRQ 206	222	LPDTS wakeup through EXTI line detection interrupt	0x0000_0378
IRQ 207	223	TIMER0 DEC interrupt	0x0000_037C
IRQ 208	224	TIMER7 DEC interrupt	0x0000_0380
IRQ 209	225	TIMER1 DEC interrupt	0x0000_0384
IRQ 210	226	TIMER2 DEC interrupt	0x0000_0388
IRQ 211	227	TIMER3 DEC interrupt	0x0000_038C
IRQ 212	228	TIMER4 DEC interrupt	0x0000_0390
IRQ 213	229	TIMER22 DEC interrupt	0x0000_0394
IRQ 214	230	TIMER23 DEC interrupt	0x0000_0398
IRQ 215	231	TIMER30 DEC interrupt	0x0000_039C
IRQ 216	232	TIMER31 DEC interrupt	0x0000_03A0

8.4. External interrupt and event (EXTI) block diagram

Figure 8-1. Block diagram of EXTI

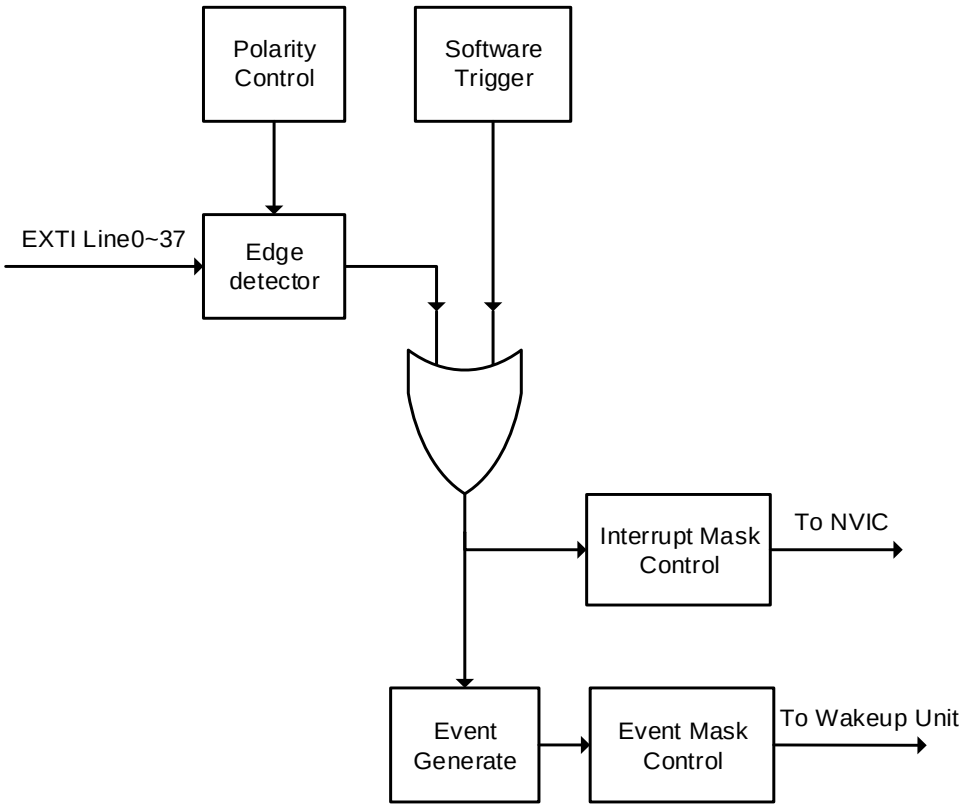

8.5. External interrupt and event function overview

The EXTI contains up to 38 independent edge detectors and generates interrupts request or event to the processer. The EXTI has three trigger types: rising edge, falling edge and both edges. Each edge detector in the EXTI can be configured and masked independently.

The EXTI trigger source includes 16 external lines from GPIO pins and 22 lines from internal modules which refers to ***Table 8-3. EXTI source***. All GPIO pins can be selected as an EXTI trigger source by configuring SYSCFG_EXTISSx registers in SYSCFG module (please refer to ***System configuration registers*** for detail).

EXTI can provide not only interrupts but also event signals to the processor. The Cortex®-M7 processor fully implements the Wait For Interrupt (WFI), Wait For Event (WFE) and the Send Event (SEV) instructions. The Wake-up Interrupt Controller (WIC) enables the processor and NVIC to be put into a very low-power sleep mode leaving the WIC to identify and prioritize interrupts and events. EXTI can be used to wake up processor and the whole system when some expected event occurs, such as a special GPIO pin toggling or RTC alarm.

Hardware trigger

Hardware trigger may be used to detect the voltage change of external or internal signals. The software should follow these steps to use this function:

1. Configure EXTI sources in SYSCFG module based on application requirement.
2. Configure EXTI_RTEN and EXTI_FTEN to enable the rising or falling detection on related pins. (Software may set both RTENx and FTENx for a pin at the same time to detect both rising and falling changes on this pin).
3. Enable interrupts or events by setting related EXTI_INTEN or EXTI_EVEN bits.
4. EXTI starts to detect changes on the configured pins. The related interrupt or event will be triggered when desired change is detected on these pins. If the interrupt is triggered, the related PDx is set; if the event is triggered, the related PDx is not set. The software should response to the interrupts or events and clear these PDx bits.

Software trigger

Software may also trigger EXTI interrupts or events following these steps:

1. Enable interrupts or events by setting related EXTI_INTEN or EXTI_EVEN bits.
2. Set SWIEVx bits in EXTI_SWIEV register, the related interrupt or event will be triggered immediately. If the interrupt is triggered, the related PDx is set; if the event is triggered, the related PDx is not set. Software should response to these interrupts, and clear related PDx bits.

Table 8-3. EXTI source

EXTI line number	Source
0	PA0 / PB0 / PC0 / PD0 / PE0 / PF0 / PG0 / PH0 / PK0
1	PA1 / PB1 / PC1 / PD1 / PE1 / PF1 / PG1 / PH1 / PK1
2	PA2 / PB2 / PC2 / PD2 / PE2 / PF2 / PG2 / PH2 / PK2
3	PA3 / PB3 / PC3 / PD3 / PE3 / PF3 / PG3 / PH3
4	PA4 / PB4 / PC4 / PD4 / PE4 / PF4 / PG4 / PH4
5	PA5 / PB5 / PC5 / PD5 / PE5 / PF5 / PG5 / PH5
6	PA6 / PB6 / PC6 / PD6 / PE6 / PF6 / PG6 / PH6
7	PA7 / PB7 / PC7 / PD7 / PE7 / PF7 / PG7 / PH7
8	PA8 / PB8 / PC8 / PD8 / PE8 / PF8 / PG8 / PH8 / PJ8
9	PA9 / PB9 / PC9 / PD9 / PE9 / PF9 / PG9 / PH9 / PJ9
10	PA10 / PB10 / PC10 / PD10 / PE10 / PF10 / PG10 / PH10 / PJ10
11	PB11 / PC11 / PD11 / PE11 / PF11 / PG11 / PH11 / PJ11
12	PB12 / PC12 / PD12 / PE12 / PF12 / PG12 / PH12
13	PA13 / PB13 / PC13 / PD13 / PE13 / PF13 / PG13 / PH13
14	PA14 / PB14 / PC14 / PD14 / PE14 / PF14 / PG14 / PH14
15	PA15 / PB15 / PC15 / PD15 / PE15 / PF15 / PG15 / PH15
16	VAVD, LVD and VOVD

EXTI line number	Source
17	RTC alarm
18	RTC tamper and timestamp event, LXTAL clock stuck
19	RTC wakeup
20	CMP0 output
21	CMP1 output
22	Ethernet1 wakeup
23	Ethernet0 wakeup
24	CAN0 wakeup
25	CAN1 wakeup
26	CAN2 wakeup
27	USART0 wakeup
28	USART1 wakeup
29	USART2 wakeup
30	USART5 wakeup
31	USBHS0 wakeup
32	USBHS1 wakeup
33	I2C0 wakeup
34	I2C1 wakeup
35	I2C2 wakeup
36	I2C3 wakeup
37	LPDTS wakeup

8.6. Register definition

EXTI base address: 0x5800 0000

8.6.1. Interrupt enable register 0 (EXTI_INTEN0)

Address offset: 0x00

Reset value: 0x0000 0000

This register has to be accessed by word (32-bit).

31	30	29	28	27	26	25	24	23	22	21	20	19	18	17	16
INTEN31	INTEN30	INTEN29	INTEN28	INTEN27	INTEN26	INTEN25	INTEN24	INTEN23	INTEN22	INTEN21	INTEN20	INTEN19	INTEN18	INTEN17	INTEN16
rw	rw	rw	rw	rw	rw	rw	rw	rw	rw	rw	rw	rw	rw	rw	rw
15	14	13	12	11	10	9	8	7	6	5	4	3	2	1	0
INTEN15	INTEN14	INTEN13	INTEN12	INTEN11	INTEN10	INTEN9	INTEN8	INTEN7	INTEN6	INTEN5	INTEN4	INTEN3	INTEN2	INTEN1	INTEN0
rw	rw	rw	rw	rw	rw	rw	rw	rw	rw	rw	rw	rw	rw	rw	rw

Bits	Fields	Descriptions
31:0	INTENx	Interrupt enable bit x (x = 0…31) 0: Interrupt from linex is disabled. 1: Interrupt from linex is enabled.

8.6.2. Event enable register 0 (EXTI_EVEN0)

Address offset: 0x04

Reset value: 0x0000 0000

This register has to be accessed by word (32-bit).

31	30	29	28	27	26	25	24	23	22	21	20	19	18	17	16
EVEN31	EVEN30	EVEN29	EVEN28	EVEN27	EVEN26	EVEN25	EVEN24	EVEN23	EVEN22	EVEN21	EVEN20	EVEN19	EVEN18	EVEN17	EVEN16
rw	rw	rw	rw	rw	rw	rw	rw	rw	rw	rw	rw	rw	rw	rw	rw
15	14	13	12	11	10	9	8	7	6	5	4	3	2	1	0
EVEN15	EVEN14	EVEN13	EVEN12	EVEN11	EVEN10	EVEN9	EVEN8	EVEN7	EVEN6	EVEN5	EVEN4	EVEN3	EVEN2	EVEN1	EVEN0
rw	rw	rw	rw	rw	rw	rw	rw	rw	rw	rw	rw	rw	rw	rw	rw

Bits	Fields	Descriptions
31:0	EVENx	Event enable bit x (x = 0…31) 0: Event from linex is disabled 1: Event from linex is enabled

8.6.3. Rising edge trigger enable register 0 (EXTI_RTEN0)

Address offset: 0x08

Reset value: 0x0000 0000

This register has to be accessed by word (32-bit).

31	30	29	28	27	26	25	24	23	22	21	20	19	18	17	16
RTEN31	RTEN30	RTEN29	RTEN28	RTEN27	RTEN26	RTEN25	RTEN24	RTEN23	RTEN22	RTEN21	RTEN20	RTEN19	RTEN18	RTEN17	RTEN16
rw	rw	rw	rw	rw	rw	rw	rw	rw	rw	rw	rw	rw	rw	rw	rw
15	14	13	12	11	10	9	8	7	6	5	4	3	2	1	0
RTEN15	RTEN14	RTEN13	RTEN12	RTEN11	RTEN10	RTEN9	RTEN8	RTEN7	RTEN6	RTEN5	RTEN4	RTEN3	RTEN2	RTEN1	RTEN0
rw	rw	rw	rw	rw	rw	rw	rw	rw	rw	rw	rw	rw	rw	rw	rw

Bits	Fields	Descriptions
31:0	RTENx	Rising edge trigger enable bit x (x = 0…31) 0: Rising edge of linex is invalid 1: Rising edge of linex is valid as an interrupt / event request

8.6.4. Falling edge trigger enable register 0 (EXTI_FTEN0)

Address offset: 0x0C

Reset value: 0x0000 0000

This register has to be accessed by word (32-bit).

31	30	29	28	27	26	25	24	23	22	21	20	19	18	17	16
FTEN31	FTEN30	FTEN29	FTEN28	FTEN27	FTEN26	FTEN25	FTEN24	FTEN23	FTEN22	FTEN21	FTEN20	FTEN19	FTEN18	FTEN17	FTEN16
rw	rw	rw	rw	rw	rw	rw	rw	rw	rw	rw	rw	rw	rw	rw	rw
15	14	13	12	11	10	9	8	7	6	5	4	3	2	1	0
FTEN15	FTEN14	FTEN13	FTEN12	FTEN11	FTEN10	FTEN9	FTEN8	FTEN7	FTEN6	FTEN5	FTEN4	FTEN3	FTEN2	FTEN1	FTEN0
rw	rw	rw	rw	rw	rw	rw	rw	rw	rw	rw	rw	rw	rw	rw	rw

Bits	Fields	Descriptions
31:0	FTENx	Falling edge trigger enable bit x (x = 0…31) 0: Falling edge of linex is invalid 1: Falling edge of linex is valid as an interrupt / event request

8.6.5. Software interrupt event register 0 (EXTI_SWIEV0)

Address offset: 0x10

Reset value: 0x0000 0000

This register has to be accessed by word (32-bit).

31	30	29	28	27	26	25	24	23	22	21	20	19	18	17	16
SWIEV31	SWIEV30	SWIEV29	SWIEV28	SWIEV27	SWIEV26	SWIEV25	SWIEV24	SWIEV23	SWIEV22	SWIEV21	SWIEV20	SWIEV19	SWIEV18	SWIEV17	SWIEV16
rw	rw	rw	rw	rw	rw	rw	rw	rw	rw	rw	rw	rw	rw	rw	rw
15	14	13	12	11	10	9	8	7	6	5	4	3	2	1	0
SWIEV15	SWIEV14	SWIEV13	SWIEV12	SWIEV11	SWIEV10	SWIEV9	SWIEV8	SWIEV7	SWIEV6	SWIEV5	SWIEV4	SWIEV3	SWIEV2	SWIEV1	SWIEV0

rw	rw	rw	rw	rw	rw	rw	rw	rw	rw	rw	rw	rw	rw	rw	rw

Bits	Fields	Descriptions
31:0	SWIEVx	Interrupt / event software trigger bit x (x = 0…31) 0: Deactivate the EXTIx software interrupt / event request 1: Activate the EXTIx software interrupt / event request

8.6.6. Pending register 0 (EXTI_PD0)

Address offset: 0x14

Reset value: 0xXXXX XXXX where X is undefined.

This register has to be accessed by word (32-bit).

31	30	29	28	27	26	25	24	23	22	21	20	19	18	17	16
PD31	PD30	PD29	PD28	PD27	PD26	PD25	PD24	PD23	PD22	PD21	PD20	PD19	PD18	PD17	PD16
rc_w1	rc_w1	rc_w1	rc_w1	rc_w1	rc_w1	rc_w1	rc_w1	rc_w1	rc_w1	rc_w1	rc_w1	rc_w1	rc_w1	rc_w1	rc_w1

15	14	13	12	11	10	9	8	7	6	5	4	3	2	1	0
PD15	PD14	PD13	PD12	PD11	PD10	PD9	PD8	PD7	PD6	PD5	PD4	PD3	PD2	PD1	PD0
rc_w1	rc_w1	rc_w1	rc_w1	rc_w1	rc_w1	rc_w1	rc_w1	rc_w1	rc_w1	rc_w1	rc_w1	rc_w1	rc_w1	rc_w1	rc_w1

Bits	Fields	Descriptions
31:0	PDx	Interrupt pending status bit x (x = 0…31) 0: EXTI linex is not triggered 1: EXTI linex is triggered. This bit is cleared to 0 by writing 1 to it.

8.6.7. Interrupt enable register 1 (EXTI_INTEN1)

Address offset: 0x18

Reset value: 0x0000 0000

This register has to be accessed by word (32-bit).

31	30	29	28	27	26	25	24	23	22	21	20	19	18	17	16
Reserved															

15	14	13	12	11	10	9	8	7	6	5	4	3	2	1	0
Reserved										INTEN37	INTEN36	INTEN35	INTEN34	INTEN33	INTEN32
										rw	rw	rw	rw	rw	rw

Bits	Fields	Descriptions
31:6	Reserved	Must be kept at reset value.
5:0	INTENx	Interrupt enable bit x (x = 32…37) 0: Interrupt from linex is disabled. 1: Interrupt from linex is enabled.

8.6.8. Event enable register 1 (EXTI_EVEN1)

Address offset: 0x1C

Reset value: 0x0000 0000

This register has to be accessed by word (32-bit).

31	30	29	28	27	26	25	24	23	22	21	20	19	18	17	16
Reserved															

15	14	13	12	11	10	9	8	7	6	5	4	3	2	1	0
Reserved										EVEN37	EVEN36	EVEN35	EVEN34	EVEN33	EVEN32
										rw	rw	rw	rw	rw	rw

Bits	Fields	Descriptions
31:6	Reserved	Must be kept at reset value.
5:0	EVENx	Event enable bit x (x = 32…37) 0: Event from linex is disabled. 1: Event from linex is enabled.

8.6.9. Rising edge trigger enable register 1 (EXTI_RTEN1)

Address offset: 0x20

Reset value: 0x0000 0000

This register has to be accessed by word (32-bit).

31	30	29	28	27	26	25	24	23	22	21	20	19	18	17	16
Reserved															

15	14	13	12	11	10	9	8	7	6	5	4	3	2	1	0
Reserved										RTEN37	RTEN36	RTEN35	RTEN34	RTEN33	RTEN32
										rw	rw	rw	rw	rw	rw

Bits	Fields	Descriptions
31:6	Reserved	Must be kept at reset value.
5:0	RTENx	Rising edge trigger enable bit x (x = 32…37) 0: Rising edge of linex is invalid 1: Rising edge of linex is valid as an interrupt / event request

8.6.10. Falling edge trigger enable register 1 (EXTI_FTEN1)

Address offset: 0x24

Reset value: 0x0000 0000

This register has to be accessed by word (32-bit).

31	30	29	28	27	26	25	24	23	22	21	20	19	18	17	16
Reserved															

15	14	13	12	11	10	9	8	7	6	5	4	3	2	1	0
Reserved										FTEN37	FTEN36	FTEN35	FTEN34	FTEN33	FTEN32
										rw	rw	rw	rw	rw	rw

Bits	Fields	Descriptions
31:6	Reserved	Must be kept at reset value.
5:0	FTENx	Falling edge trigger enable bit x (x = 32…37) 0: Falling edge of linex is invalid 1: Falling edge of linex is valid as an interrupt / event request

8.6.11. Software interrupt event register 1 (EXTI_SWIEV1)

Address offset: 0x28

Reset value: 0x0000 0000

This register has to be accessed by word (32-bit).

31	30	29	28	27	26	25	24	23	22	21	20	19	18	17	16
Reserved															

15	14	13	12	11	10	9	8	7	6	5	4	3	2	1	0
Reserved										SWIEV37	SWIEV36	SWIEV35	SWIEV34	SWIEV33	SWIEV32
										rw	rw	rw	rw	rw	rw

Bits	Fields	Descriptions
31:6	Reserved	Must be kept at reset value.
5:0	SWIEVx	Interrupt / event software trigger bit x (x = 32…37) 0: Deactivate the EXTIx software interrupt / event request 1: Activate the EXTIx software interrupt / event request

8.6.12. Pending register 1 (EXTI_PD1)

Address offset: 0x2C

Reset value: 0x0000 00XX where X is undefined.

This register has to be accessed by word (32-bit).

31	30	29	28	27	26	25	24	23	22	21	20	19	18	17	16
Reserved															

15	14	13	12	11	10	9	8	7	6	5	4	3	2	1	0
Reserved										PD37	PD36	PD35	PD34	PD33	PD32

rc_w1	rc_w1	rc_w1	rc_w1	rc_w1	rc_w1

Bits	Fields	Descriptions
31:6	Reserved	Must be kept at reset value.
5:0	PDx	Interrupt pending status bit x (x = 32…37) 0: EXTI linex is not triggered 1: EXTI linex is triggered. This bit is cleared to 0 by writing 1 to it.

9. Trigger selection controller (TRIGSEL)

9.1. Overview

The trigger selection controller (TRIGSEL) allows software to select the trigger input signal for various peripherals. TRIGSEL provides a flexible mechanism for a peripheral to select different trigger inputs.

With TRIGSEL, there are up to 150 trigger input signals could be selected. Configure the corresponding register to select the different trigger signal for the specified trigger input of each peripheral.

9.2. Characteristics

- Support up to 150 trigger input signals.
- Each peripheral has its corresponding register to select trigger input signal.
- Trigger input source could be external input signal or output of peripheral.
- Trigger selection output could be for external output or peripheral input.

9.3. Function overview

With TRIGSEL, peripherals that support trigger source selection have dedicated registers to select the trigger input source. Each register can be configured with 3 outputs, which are connected to the trigger input of the peripheral. Each output can select different trigger input sources.

The ***Figure 9-1. TRIGSEL main composition example*** shows the main composition of TRIGSEL.

Figure 9-1. TRIGSEL main composition example

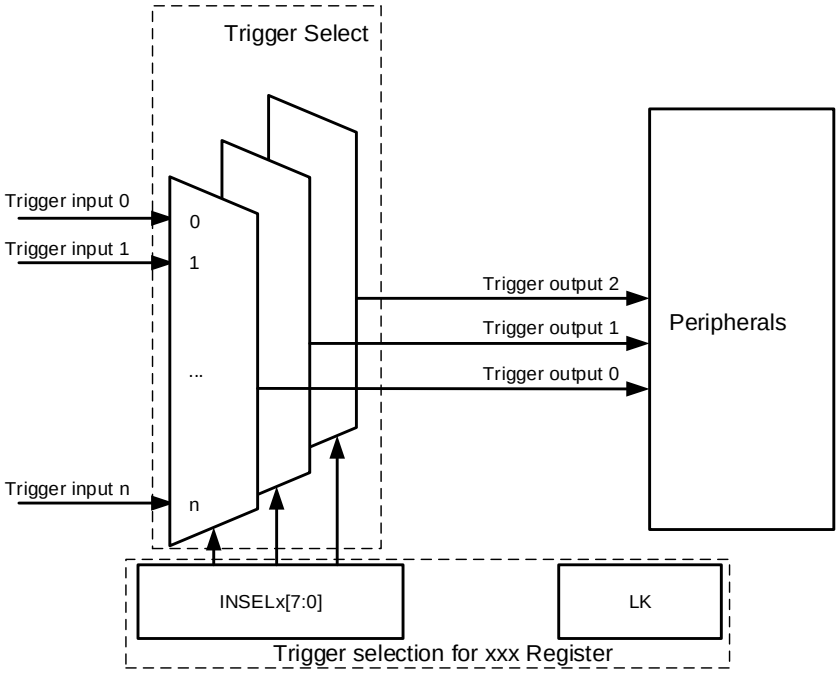

9.4. Internal connect

The TRIGSEL allows software to select the trigger input for peripherals. The ***Table 9-1. Trigger input bit fields selection*** shows the trigger input register selection.

Table 9-1. Trigger input bit fields selection

fields	bits value	trigger input selection
INSELx	0x00	0
	0x01	1
	0x02	TRIGSEL_IN0
	0x03	TRIGSEL_IN1
	0x04	TRIGSEL_IN2
	0x05	TRIGSEL_IN3
	0x06	TRIGSEL_IN4
	0x07	TRIGSEL_IN5
	0x08	TRIGSEL_IN6
	0x09	TRIGSEL_IN7
	0x0a	TRIGSEL_IN8
	0x0b	TRIGSEL_IN9
	0x0c	TRIGSEL_IN10
	0x0d	TRIGSEL_IN11
	0x0e	TRIGSEL_IN12
	0x0f	TRIGSEL_IN13

fields	bits value	trigger input selection
	0x10	LXTAL_TRG
	0x11	TIMER0_TRGO0
	0x12	TIMER0_TRGO1
	0x13	TIMER0_CH0
	0x14	TIMER0_CH1
	0x15	TIMER0_CH2
	0x16	TIMER0_CH3
	0x17	TIMER0_MCH0
	0x18	TIMER0_MCH1
	0x19	TIMER0_MCH2
	0x1a	TIMER0_MCH3
	0x1b~0x20	Reserved
	0x21	TIMER0_BRKIN0
	0x22	TIMER0_BRKIN1
	0x23	TIMER0_BRKIN2
	0x24	TIMER0_ETI
	0x25	TIMER1_TRGO0
	0x26	TIMER1_CH0
	0x27	TIMER1_CH1
	0x28	TIMER1_CH2
	0x29	TIMER1_CH3
	0x2a	TIMER1_ETI
	0x2b	TIMER2_TRGO0
	0x2c	TIMER2_CH0
	0x2d	TIMER2_CH1
	0x2e	TIMER2_CH2
	0x2f	TIMER2_CH3
	0x30	TIMER2_ETI
	0x31	TIMER3_TRGO0
	0x32	TIMER3_CH0
	0x33	TIMER3_CH1
	0x34	TIMER3_CH2
	0x35	TIMER3_CH3
	0x36	TIMER3_ETI
	0x37	TIMER4_TRGO0
	0x38	TIMER4_CH0
	0x39	TIMER4_CH1
	0x3a	TIMER4_CH2
	0x3b	TIMER4_CH3
	0x3c	TIMER4_ETI
	0x3d	TIMER5_TRGO0

fields	bits value	trigger input selection
	0x3e	TIMER6_TRGO0
	0x3f	TIMER7_TRGO0
	0x40	TIMER7_TRGO1
	0x41	TIMER7_CH0
	0x42	TIMER7_CH1
	0x43	TIMER7_CH2
	0x44	TIMER7_CH3
	0x45	TIMER7_MCH0
	0x46	TIMER7_MCH1
	0x47	TIMER7_MCH2
	0x48	TIMER7_MCH3
	0x49~0x4e	Reserved
	0x4f	TIMER7_BRKIN0
	0x50	TIMER7_BRKIN1
	0x51	TIMER7_BRKIN2
	0x52	TIMER7_ETI
	0x53	TIMER14_TRGO0
	0x54	TIMER14_CH0
	0x55	TIMER14_CH1
	0x56	TIMER14_MCH0
	0x57~0x58	Reserved
	0x59	TIMER14_BRKIN0
	0x5a	TIMER15_CH0
	0x5b	TIMER15_MCH0
	0x5c~0x5d	Reserved
	0x5e	TIMER15_BRKIN0
	0x5f	TIMER16_CH0
	0x60	TIMER16_MCH0
	0x61~0x62	Reserved
	0x63	TIMER16_BRKIN0
	0x64	TIMER22_TRGO0
	0x65	TIMER22_CH0
	0x66	TIMER22_CH1
	0x67	TIMER22_CH2
	0x68	TIMER22_CH3
	0x69	TIMER22_ETI
	0x6a	TIMER23_TRGO0
	0x6b	TIMER23_CH0
	0x6c	TIMER23_CH1
	0x6d	TIMER23_CH2
	0x6e	TIMER23_CH3

fields	bits value	trigger input selection
	0x6f	TIMER23_ETI
	0x70	TIMER30_TRGO0
	0x71	TIMER30_CH0
	0x72	TIMER30_CH1
	0x73	TIMER30_CH2
	0x74	TIMER30_CH3
	0x75	TIMER30_ETI
	0x76	TIMER31_TRGO0
	0x77	TIMER31_CH0
	0x78	TIMER31_CH1
	0x79	TIMER31_CH2
	0x7a	TIMER31_CH3
	0x7b	TIMER31_ETI
	0x7c	TIMER40_TRGO0
	0x7d	TIMER40_CH0
	0x7e	TIMER40_CH1
	0x7f	TIMER40_MCH0
	0x80~0x81	Reserved
	0x82	TIMER40_BRKIN0
	0x83	TIMER41_TRGO0
	0x84	TIMER41_CH0
	0x85	TIMER41_CH1
	0x86	TIMER41_MCH0
	0x87~0x88	Reserved
	0x89	TIMER41_BRKIN0
	0x8a	TIMER42_TRGO0
	0x8b	TIMER42_CH0
	0x8c	TIMER42_CH1
	0x8d	TIMER42_MCH0
	0x8e~0x8f	Reserved
	0x90	TIMER42_BRKIN0
	0x91	TIMER43_TRGO0
	0x92	TIMER43_CH0
	0x93	TIMER43_CH1
	0x94	TIMER43_MCH0
	0x95~0x96	Reserved
	0x97	TIMER43_BRKIN0
	0x98	TIMER44_TRGO0
	0x99	TIMER44_CH0
	0x9a	TIMER44_CH1
	0x9b	TIMER44_MCH0

fields	bits value	trigger input selection
	0x9c~0x9d	Reserved
	0x9e	TIMER44_BRKIN0
	0x9f	TIMER50_TRGO0
	0xa0	TIMER51_TRGO0
	0xa1	RTC_Alarm
	0xa2	RTC_TPTS
	0xa3	ADC0_WD0_OUT
	0xa4	ADC0_WD1_OUT
	0xa5	ADC0_WD2_OUT
	0xa6	ADC1_WD0_OUT
	0xa7	ADC1_WD1_OUT
	0xa8	ADC1_WD2_OUT
	0xa9	ADC2_WD0_OUT
	0xaa	ADC2_WD1_OUT
	0xab	ADC2_WD2_OUT
	0xac	CMP0_OUT
	0xad	CMP1_OUT
	0xae	SAI0_FS0
	0xaf	SAI0_FS1
	0xb0	SAI2_FS0
	0xb1	SAI2_FS1
	0xb2~0xff	Reserved

Table 9-2. TRIGSEL input and output mapping shows the connection relationship between TRIGSEL input and output. Through the INSELx[7:0] bits of TRIGSEL register, an input trigger source can be selected for the output of TRIGSEL. Each TRIGSEL register can configure with up to 3 outputs, which are connected to the corresponding peripherals.

Table 9-2. TRIGSEL input and output mapping

Trigger Source	Trigger select	TRIGSEL Register	TRIGSEL output	Peripherals
0 1 TRIGSEL_IN0 TRIGSEL_IN1 TRIGSEL_IN2 TRIGSEL_IN3 TRIGSEL_IN4 TRIGSEL_IN5	INSELx[7:0]	TRIGSEL_EXTOUT_0	Output0 Output1	TRIGSEL_OUT0 TRIGSEL_OUT1
		TRIGSEL_EXTOUT_1	Output0 Output1	TRIGSEL_OUT2 TRIGSEL_OUT3

Trigger Source	Trigger select	TRIGSEL Register	TRIGSEL output	Peripherals
TRIGSEL_IN6 TRIGSEL_IN7 TRIGSEL_IN8 TRIGSEL_IN9 TRIGSEL_IN10 TRIGSEL_IN11 TRIGSEL_IN12 TRIGSEL_IN13 LXTAL_TRG TIMER0_TRGO0 TIMER0_TRGO1 TIMER0_CH0 TIMER0_CH1 TIMER0_CH2 TIMER0_CH3 TIMER0_MCH0 TIMER0_MCH1 TIMER0_MCH2 TIMER0_MCH3 TIMER0_BRKIN0 TIMER0_BRKIN1 TIMER0_BRKIN2 TIMER0_ETI TIMER1_TRGO0 TIMER1_CH0 TIMER1_CH1 TIMER1_CH2 TIMER1_CH3 TIMER1_ETI TIMER2_TRGO0 TIMER2_CH0 TIMER2_CH1 TIMER2_CH2 TIMER2_CH3 TIMER2_ETI TIMER3_TRGO0 TIMER3_CH0 TIMER3_CH1 TIMER3_CH2 TIMER3_CH3		TRIGSEL_EXTOUT_2	Output0 Output1	TRIGSEL_OUT4 TRIGSEL_OUT5
		TRIGSEL_EXTOUT_3	Output0 Output1	TRIGSEL_OUT6 TRIGSEL_OUT7
		TRIGSEL_ADC0	Output0	ADC0_ROUTRG
		TRIGSEL_ADC1	Output0	ADC1_ROUTRG
		TRIGSEL_ADC2	Output0	ADC2_ROUTRG
		TRIGSEL_DAC0OUT0	Output0	DAC0_OUT0_EXTRG
		TRIGSEL_DAC0OUT1	Output0	DAC0_OUT1_EXTRG
		TRIGSEL_TIMER0BRKIN	Output0 Output1 Output2	TIMER0_BRKIN0 TIMER0_BRKIN1 TIMER0_BRKIN2
		TRIGSEL_TIMER7BRKIN	Output0 Output1 Output2	TIMER7_BRKIN0 TIMER7_BRKIN1 TIMER7_BRKIN2
		TRIGSEL_TIMER14BRKIN	Output0	TIMER14_BRKIN0

Trigger Source	Trigger select	TRIGSEL Register	TRIGSEL output	Peripherals
TIMER3_ETI TIMER4_TRGO0 TIMER4_CH0 TIMER4_CH1 TIMER4_CH2 TIMER4_CH3 TIMER4_ETI TIMER5_TRGO0 TIMER6_TRGO0 TIMER7_TRGO0 TIMER7_TRGO1 TIMER7_CH0 TIMER7_CH1 TIMER7_CH2 TIMER7_CH3 TIMER7_MCH0 TIMER7_MCH1 TIMER7_MCH2 TIMER7_MCH3 TIMER7_BRKIN0 TIMER7_BRKIN1 TIMER7_BRKIN2 TIMER7_ETI TIMER14_TRGO0 TIMER14_CH0 TIMER14_CH1 TIMER14_MCH0 TIMER14_BRKIN0 TIMER15_CH0 TIMER15_MCH0 TIMER15_BRKIN0 TIMER16_CH0 TIMER16_MCH0 TIMER16_BRKIN0 TIMER22_TRGO0 TIMER22_CH0 TIMER22_CH1 TIMER22_CH2 TIMER22_CH3 TIMER22_ETI		TRIGSEL_TIMER15BRKIN	Output0	TIMER15_BRKIN0
		TRIGSEL_TIMER16BRKIN	Output0	TIMER16_BRKIN0
		TRIGSEL_TIMER40BRKIN	Output0	TIMER40_BRKIN0
		TRIGSEL_TIMER41BRKIN	Output0	TIMER41_BRKIN0
		TRIGSEL_TIMER42BRKIN	Output0	TIMER42_BRKIN0
		TRIGSEL_TIMER43BRKIN	Output0	TIMER43_BRKIN0
		TRIGSEL_TIMER44BRKIN	Output0	TIMER44_BRKIN0
		TRIGSEL_CAN0	Output0	CAN0_EX_TIME_TICK
		TRIGSEL_CAN1	Output0	CAN1_EX_TIME_TICK
		TRIGSEL_CAN2	Output0	CAN2_EX_TIME_TICK

Trigger Source	Trigger select	TRIGSEL Register	TRIGSEL output	Peripherals
TIMER23_TRGO0 TIMER23_CH0 TIMER23_CH1 TIMER23_CH2 TIMER23_CH3 TIMER23_ETI TIMER30_TRGO0 TIMER30_CH0 TIMER30_CH1 TIMER30_CH2 TIMER30_CH3 TIMER30_ETI TIMER31_TRGO0 TIMER31_CH0 TIMER31_CH1 TIMER31_CH2 TIMER31_CH3 TIMER31_ETI TIMER40_TRGO0 TIMER40_CH0 TIMER40_CH1 TIMER40_MCH0 TIMER40_BRKIN0 TIMER41_TRGO0 TIMER41_CH0 TIMER41_CH1 TIMER41_MCH0 TIMER41_BRKIN0 TIMER42_TRGO0 TIMER42_CH0 TIMER42_CH1 TIMER42_MCH0 TIMER42_BRKIN0 TIMER43_TRGO0 TIMER43_CH0 TIMER43_CH1 TIMER43_MCH0 TIMER43_BRKIN0 TIMER44_TRGO0 TIMER44_CH0		TRIGSEL_LPDTS	Output0	LPDTS_TRG
		TRIGSEL_EDOUT	Output0	EDOUT_TRG
		TRIGSEL_HPDF	Output0	HPDF_ITRG
		TRIGSEL_TIMER0ETI	Output0	TIMER0_ETI
		TRIGSEL_TIMER1ETI	Output0	TIMER1_ETI
		TRIGSEL_TIMER2ETI	Output0	TIMER2_ETI
		TRIGSEL_TIMER3ETI	Output0	TIMER3_ETI
		TRIGSEL_TIMER4ETI	Output0	TIMER4_ETI
		TRIGSEL_TIMER7ETI	Output0	TIMER7_ETI
		TRIGSEL_TIMER22ETI	Output0	TIMER22_ETI

Trigger Source	Trigger select	TRIGSEL Register	TRIGSEL output	Peripherals
TIMER44_CH1 TIMER44_MCH0 TIMER44_BRKIN0 TIMER50_TRGO0 TIMER51_TRGO0 RTC_Alarm RTC_TPTS ADC0_WD0_OUT ADC0_WD1_OUT ADC0_WD2_OUT ADC1_WD0_OUT ADC1_WD1_OUT ADC1_WD2_OUT ADC2_WD0_OUT ADC2_WD1_OUT ADC2_WD2_OUT CMP0_OUT CMP1_OUT SAI0_FS0 SAI0_FS1 SAI2_FS0 SAI2_FS1		TRIGSEL_TIMER23ETI	Output0	TIMER23_ETI
		TRIGSEL_TIMER30ETI	Output0	TIMER30_ETI
		TRIGSEL_TIMER31ETI	Output0	TIMER31_ETI
		TRIGSEL_TIMER0ITI14	Output0	TIMER0_ITI14
		TRIGSEL_TIMER1ITI14	Output0	TIMER1_ITI14
		TRIGSEL_TIMER2ITI14	Output0	TIMER2_ITI14
		TRIGSEL_TIMER3ITI14	Output0	TIMER3_ITI14
		TRIGSEL_TIMER4ITI14	Output0	TIMER4_ITI14
		TRIGSEL_TIMER7ITI14	Output0	TIMER7_ITI14
		TRIGSEL_TIMER14ITI14	Output0	TIMER14_ITI14

Trigger Source	Trigger select	TRIGSEL Register	TRIGSEL output	Peripherals
		TRIGSEL_TIMER22ITI14	Output0	TIMER22_ITI14
		TRIGSEL_TIMER23ITI14	Output0	TIMER23_ITI14
		TRIGSEL_TIMER30ITI14	Output0	TIMER30_ITI14
		TRIGSEL_TIMER31ITI14	Output0	TIMER31_ITI14
		TRIGSEL_TIMER40ITI14	Output0	TIMER40_ITI14
		TRIGSEL_TIMER41ITI14	Output0	TIMER41_ITI14
		TRIGSEL_TIMER42ITI14	Output0	TIMER42_ITI14
		TRIGSEL_TIMER43ITI14	Output0	TIMER43_ITI14
		TRIGSEL_TIMER44ITI14	Output0	TIMER44_ITI14

Note: TIMERx_BRKINx can only select TIMERx_BRKINx as trigger. TIMERx_ITI14 cannot select CMPx_OUT ,LXTAL_TRG, TIMERx_BRKINx and their own signals as trigger input. Other output can select all input as trigger source except TIMERx_BRKINx. When illegal data is selected for these outputs, the output will be selected as 0.

When trigger input selection INSELx[7:0] bits is configured to be 0x00, TRIGSEL trigger input is selected as low level; when configured to be 0x01, TRIGSEL trigger input is selected as high level.

9.5. Register definition

TRIGSEL base address: 0x4001 8400

9.5.1. Trigger selection for EXTOUT register 0 (TRIGSEL_EXTOUT_0)

Address offset: 0x00

Reset value: 0x0000 0000

This register has to be accessed by word (32-bit).

31	30	29	28	27	26	25	24	23	22	21	20	19	18	17	16
LK	Reserved														
rs															

15	14	13	12	11	10	9	8	7	6	5	4	3	2	1	0
INSEL1[7:0]								INSEL0[7:0]							
rw								rw							

Bits	Fields	Descriptions
31	LK	TRIGSEL register lock. This bit is set by software and cleared only by a system reset. When it is set, it disables write access to TRIGSEL_EXTOUT_0 register. 0: TRIGSEL_EXTOUT_0 register write is enabled. 1: TRIGSEL_EXTOUT_0 register write is disabled.
30:16	Reserved	Must be kept at reset value.
15:8	INSEL1[7:0]	Trigger input source selection for output1 These bits are used to select trigger input signal connected to output1. The output can be as the source of TRIGSEL_OUT1 (external output1 signal). For the detailed configuration, please refer to ***Table 9-1. Trigger input bit fields selection***.
7:0	INSEL0[7:0]	Trigger input source selection for output0 These bits are used to select trigger input signal connected to output0. The output is used as the source of TRIGSEL_OUT0 (external output0 signal). For the detailed configuration, please refer to ***Table 9-1. Trigger input bit fields selection***.

9.5.2. Trigger selection for EXTOUT register 1 (TRIGSEL_EXTOUT_1)

Address offset: 0x04

Reset value: 0x0000 0000

This register has to be accessed by word (32-bit).

31	30	29	28	27	26	25	24	23	22	21	20	19	18	17	16
LK	Reserved														

15	14	13	12	11	10	9	8	7	6	5	4	3	2	1	0
INSEL1[7:0]								INSEL0[7:0]							
rw								rw							

Bits	Fields	Descriptions
31	LK	TRIGSEL register lock. This bit is set by software and cleared only by a system reset. When it is set, it disables write access to TRIGSEL_EXTOUT_1 register. 0: TRIGSEL_EXTOUT_1 register write is enabled. 1: TRIGSEL_EXTOUT_1 register write is disabled.
30:16	Reserved	Must be kept at reset value.
15:8	INSEL1[7:0]	Trigger input source selection for output1 These bits are used to select trigger input signal connected to output1. The output can be as the source of TRIGSEL_OUT3 (external output3 signal). For the detailed configuration, please refer to ***Table 9-1. Trigger input bit fields selection***.
7:0	INSEL0[7:0]	Trigger input source selection for output0 These bits are used to select trigger input signal connected to output0. The output is used as the source of TRIGSEL_OUT2 (external output2 signal). For the detailed configuration, please refer to ***Table 9-1. Trigger input bit fields selection***.

9.5.3. Trigger selection for EXTOUT register 2 (TRIGSEL_EXTOUT_2)

Address offset: 0x08

Reset value: 0x0000 0000

This register has to be accessed by word (32-bit).

31	30	29	28	27	26	25	24	23	22	21	20	19	18	17	16
LK	Reserved														
rs															

15	14	13	12	11	10	9	8	7	6	5	4	3	2	1	0
INSEL1[7:0]								INSEL0[7:0]							
rw								rw							

Bits	Fields	Descriptions
31	LK	TRIGSEL register lock. This bit is set by software and cleared only by a system reset. When it is set, it disables write access to TRIGSEL_EXTOUT_2 register. 0: TRIGSEL_EXTOUT_2 register write is enabled. 1: TRIGSEL_EXTOUT_2 register write is disabled.
30:16	Reserved	Must be kept at reset value.
15:8	INSEL1[7:0]	Trigger input source selection for output1

		These bits are used to select trigger input signal connected to output1. The output can be as the source of TRIGSEL_OUT5 (external output5 signal). For the detailed configuration, please refer to ***Table 9-1. Trigger input bit fields selection***.
7:0	INSEL0[7:0]	Trigger input source selection for output0 These bits are used to select trigger input signal connected to output0. The output is used as the source of TRIGSEL_OUT4 (external output4 signal). For the detailed configuration, please refer to ***Table 9-1. Trigger input bit fields selection***.

9.5.4. Trigger selection for EXTOUT register 3 (TRIGSEL_EXTOUT_3)

Address offset: 0x0C

Reset value: 0x0000 0000

This register has to be accessed by word (32-bit).

31	30	29	28	27	26	25	24	23	22	21	20	19	18	17	16
LK	Reserved														

15	14	13	12	11	10	9	8	7	6	5	4	3	2	1	0
INSEL1[7:0]								INSEL0[7:0]							
rw								rw							

Bits	Fields	Descriptions
31	LK	TRIGSEL register lock. This bit is set by software and cleared only by a system reset. When it is set, it disables write access to TRIGSEL_EXTOUT_3 register. 0: TRIGSEL_EXTOUT_3 register write is enabled. 1: TRIGSEL_EXTOUT_3 register write is disabled.
30:16	Reserved	Must be kept at reset value.
15:8	INSEL1[7:0]	Trigger input source selection for output1 These bits are used to select trigger input signal connected to output1. The output can be as the source of TRIGSEL_OUT7 (external output7 signal). For the detailed configuration, please refer to ***Table 9-1. Trigger input bit fields selection***.
7:0	INSEL0[7:0]	Trigger input source selection for output0 These bits are used to select trigger input signal connected to output0. The output is used as the source of TRIGSEL_OUT6 (external output6 signal). For the detailed configuration, please refer to ***Table 9-1. Trigger input bit fields selection***.

9.5.5. Trigger selection for ADC0 register (TRIGSEL_ADC0)

Address offset: 0x10

Reset value: 0x0000 1113

This register has to be accessed by word (32-bit).

31	30	29	28	27	26	25	24	23	22	21	20	19	18	17	16
LK	Reserved														
rs															

15	14	13	12	11	10	9	8	7	6	5	4	3	2	1	0
Reserved								INSEL0[7:0]							
											rw				

Bits	Fields	Descriptions
31	LK	TRIGSEL register lock. This bit is set by software and cleared only by a system reset. When it is set, it disables write access to TRIGSEL_ADC0 register. 0: TRIGSEL_ADC0 register write is enabled. 1: TRIGSEL_ADC0 register write is disabled.
30:16	Reserved	Must be kept at reset value.
15:8	Reserved	Must be kept at reset value.
7:0	INSEL0[7:0]	Trigger input source selection for output0 These bits are used to select trigger input signal connected to output0. The output is used as the source of ADC0_ROUTRG(ADC0 routine sequence) trigger input. For the detailed configuration, please refer to ***Table 9-1. Trigger input bit fields selection***.

9.5.6. Trigger selection for ADC1 register (TRIGSEL_ADC1)

Address offset: 0x14

Reset value: 0x0000 1113

This register has to be accessed by word (32-bit).

31	30	29	28	27	26	25	24	23	22	21	20	19	18	17	16
LK	Reserved														
rs															

15	14	13	12	11	10	9	8	7	6	5	4	3	2	1	0
Reserved								INSEL0[7:0]							
											rw				

Bits	Fields	Descriptions
31	LK	TRIGSEL register lock. This bit is set by software and cleared only by a system reset. When it is set, it disables write access to TRIGSEL_ADC1 register. 0: TRIGSEL_ADC1 register write is enabled. 1: TRIGSEL_ADC1 register write is disabled.

30:16	Reserved	Must be kept at reset value.
15:8	Reserved	Must be kept at reset value.
7:0	INSEL0[7:0]	Trigger input source selection for output0 These bits are used to select trigger input signal connected to output0. The output is used as the source of ADC1_ROUTRG(ADC1 routine sequence) trigger input. For the detailed configuration, please refer to ***Table 9-1. Trigger input bit fields selection***.

9.5.7. Trigger selection for ADC2 register (TRIGSEL_ADC2)

Address offset: 0x18

Reset value: 0x0000 1113

This register has to be accessed by word (32-bit).

31	30	29	28	27	26	25	24	23	22	21	20	19	18	17	16
LK	Reserved														
rs															

15	14	13	12	11	10	9	8	7	6	5	4	3	2	1	0
Reserved								INSEL0[7:0]							
											rw				

Bits	Fields	Descriptions
31	LK	TRIGSEL register lock. This bit is set by software and cleared only by a system reset. When it is set, it disables write access to TRIGSEL_ADC2 register. 0: TRIGSEL_ADC2 register write is enabled. 1: TRIGSEL_ADC2 register write is disabled.
30:16	Reserved	Must be kept at reset value.
15:8	Reserved	Must be kept at reset value.
7:0	INSEL0[7:0]	Trigger input source selection for output0 These bits are used to select trigger input signal connected to output0. The output is used as the source of ADC2_ROUTRG(ADC2 routine sequence) trigger input. For the detailed configuration, please refer to ***Table 9-1. Trigger input bit fields selection***.

9.5.8. Trigger selection for DAC0_OUT0 register (TRIGSEL_DAC0OUT0)

Address offset: 0x1C

Reset value: 0x0000 0025

This register has to be accessed by word (32-bit).

31	30	29	28	27	26	25	24	23	22	21	20	19	18	17	16
LK	Reserved														
rs															

15	14	13	12	11	10	9	8	7	6	5	4	3	2	1	0
Reserved								INSEL0[7:0]							
											rw				

Bits	Fields	Descriptions
31	LK	TRIGSEL register lock. This bit is set by software and cleared only by a system reset. When it is set, it disables write access to TRIGSEL_DAC0OUT0 register. 0: TRIGSEL_DAC0OUT0 register write is enabled. 1: TRIGSEL_DAC0OUT0 register write is disabled.
30:8	Reserved	Must be kept at reset value.
7:0	INSEL0[7:0]	Trigger input source selection for output0 These bits are used to select trigger input signal connected to output0. The output is used as the source of DAC0_OUT0_EXTRIG (DAC0_OUT0 external trigger) input. For the detailed configuration, please refer to ***Table 9-1. Trigger input bit fields selection***.

9.5.9. Trigger selection for DAC0_OUT1 register (TRIGSEL_DAC0OUT1)

Address offset: 0x20

Reset value: 0x0000 0025

This register has to be accessed by word (32-bit).

31	30	29	28	27	26	25	24	23	22	21	20	19	18	17	16
LK	Reserved														
rs															

15	14	13	12	11	10	9	8	7	6	5	4	3	2	1	0
Reserved								INSEL0[7:0]							
											rw				

Bits	Fields	Descriptions
31	LK	TRIGSEL register lock. This bit is set by software and cleared only by a system reset. When it is set, it disables write access to TRIGSEL_DAC0OUT1 register. 0: TRIGSEL_DAC0OUT1 register write is enabled. 1: TRIGSEL_DAC0OUT1 register write is disabled.
30:8	Reserved	Must be kept at reset value.
7:0	INSEL0[7:0]	Trigger input source selection for output0

These bits are used to select trigger input signal connected to output0. The output is used as the source of DAC0_OUT1_EXTRIG (DAC0_OUT1 external trigger) input. For the detailed configuration, please refer to ***Table 9-1. Trigger input bit fields selection***.

9.5.10. Trigger selection for TIMER0_BRKIN register (TRIGSEL_TIMER0BRKIN)

Address offset: 0x24

Reset value: 0x0023 2221

This register has to be accessed by word (32-bit).

31	30	29	28	27	26	25	24	23	22	21	20	19	18	17	16
LK	Reserved							INSEL2[7:0]							
rs								rw							

15	14	13	12	11	10	9	8	7	6	5	4	3	2	1	0
INSEL1[7:0]								INSEL0[7:0]							
rw								rw							

Bits	Fields	Descriptions
31	LK	TRIGSEL register lock. This bit is set by software and cleared only by a system reset. When it is set, it disables write access to TRIGSEL_TIMER0BRKIN register. 0: TRIGSEL_TIMER0BRKIN register write is enabled. 1: TRIGSEL_TIMER0BRKIN register write is disabled.
30:24	Reserved	Must be kept at reset value.
23:16	INSEL2[7:0]	Trigger input source selection for output2 These bits are used to select trigger input signal connected to output2. The output is used as the source of TIMER0_BRKIN2 trigger input. For the detailed configuration, please refer to ***Table 9-1. Trigger input bit fields selection***.
15:8	INSEL1[7:0]	Trigger input source selection for output1 These bits are used to select trigger input signal connected to output1. The output is used as the source of TIMER0_BRKIN1 trigger input. For the detailed configuration, please refer to ***Table 9-1. Trigger input bit fields selection***.
7:0	INSEL0[7:0]	Trigger input source selection for output0 These bits are used to select trigger input signal connected to output0. The output is used as the source of TIMER0_BRKIN0 trigger input. For the detailed configuration, please refer to ***Table 9-1. Trigger input bit fields selection***.

9.5.11. Trigger selection for TIMER7_BRKIN register (TRIGSEL_TIMER7BRKIN)

Address offset: 0x28

Reset value: 0x0051 504F

This register has to be accessed by word (32-bit).

31	30	29	28	27	26	25	24	23	22	21	20	19	18	17	16
LK	Reserved							INSEL2[7:0]							
rs								rw							

15	14	13	12	11	10	9	8	7	6	5	4	3	2	1	0
INSEL1[7:0]								INSEL0[7:0]							
rw								rw							

Bits	Fields	Descriptions
31	LK	TRIGSEL register lock. This bit is set by software and cleared only by a system reset. When it is set, it disables write access to TRIGSEL_TIMER7BRKIN register. 0: TRIGSEL_TIMER7BRKIN register write is enabled. 1: TRIGSEL_TIMER7BRKIN register write is disabled.
30:24	Reserved	Must be kept at reset value.
23:16	INSEL2[7:0]	Trigger input source selection for output2 These bits are used to select trigger input signal connected to output2. The output is used as the source of TIMER7_BRKIN2 trigger input. For the detailed configuration, please refer to ***Table 9-1. Trigger input bit fields selection***.
15:8	INSEL1[7:0]	Trigger input source selection for output1 These bits are used to select trigger input signal connected to output1. The output is used as the source of TIMER7_BRKIN1 trigger input. For the detailed configuration, please refer to ***Table 9-1. Trigger input bit fields selection***.
7:0	INSEL0[7:0]	Trigger input source selection for output0 These bits are used to select trigger input signal connected to output0. The output is used as the source of TIMER7_BRKIN0 trigger input. For the detailed configuration, please refer to ***Table 9-1. Trigger input bit fields selection***.

9.5.12. Trigger selection for TIMER14_BRKIN register (TRIGSEL_TIMER14BRKIN)

Address offset: 0x2C
Reset value: 0x0000 0059

This register has to be accessed by word (32-bit).

31	30	29	28	27	26	25	24	23	22	21	20	19	18	17	16
LK	Reserved														
rs															

15	14	13	12	11	10	9	8	7	6	5	4	3	2	1	0

Reserved	INSEL0[7:0]
	rw

Bits	Fields	Descriptions
31	LK	TRIGSEL register lock. This bit is set by software and cleared only by a system reset. When it is set, it disables write access to TRIGSEL_TIMER14BRKIN register. 0: TRIGSEL_TIMER14BRKIN register write is enabled. 1: TRIGSEL_TIMER14BRKIN register write is disabled.
30:8	Reserved	Must be kept at reset value.
7:0	INSEL0[7:0]	Trigger input source selection for output0 These bits are used to select trigger input signal connected to output0. The output is used as the source of TIMER14_BRKIN0 trigger input. For the detailed configuration, please refer to ***Table 9-1. Trigger input bit fields selection***.

9.5.13. Trigger selection for TIMER15_BRKIN register (TRIGSEL_TIMER15BRKIN)

Address offset: 0x30

Reset value: 0x0000 005E

This register has to be accessed by word (32-bit).

31	30	29	28	27	26	25	24	23	22	21	20	19	18	17	16
LK	Reserved														
rs															

15	14	13	12	11	10	9	8	7	6	5	4	3	2	1	0
Reserved								INSEL0[7:0]							
								rw							

Bits	Fields	Descriptions
31	LK	TRIGSEL register lock. This bit is set by software and cleared only by a system reset. When it is set, it disables write access to TRIGSEL_TIMER15BRKIN register. 0: TRIGSEL_TIMER15BRKIN register write is enabled. 1: TRIGSEL_TIMER15BRKIN register write is disabled.
30:8	Reserved	Must be kept at reset value.
7:0	INSEL0[7:0]	Trigger input source selection for output0 These bits are used to select trigger input signal connected to output0. The output is used as the source of TIMER15_BRKIN0 trigger input. For the detailed configuration, please refer to ***Table 9-1. Trigger input bit fields selection***.

9.5.14. Trigger selection for TIMER16_BRKIN register (TRIGSEL_TIMER16BRKIN)

Address offset: 0x34

Reset value: 0x0000 0063

This register has to be accessed by word (32-bit).

31	30	29	28	27	26	25	24	23	22	21	20	19	18	17	16
LK	Reserved														
rs															

15	14	13	12	11	10	9	8	7	6	5	4	3	2	1	0
Reserved								INSEL0[7:0]							
											rw				

Bits	Fields	Descriptions
31	LK	TRIGSEL register lock. This bit is set by software and cleared only by a system reset. When it is set, it disables write access to TRIGSEL_TIMER16BRKIN register. 0: TRIGSEL_TIMER16BRKIN register write is enabled. 1: TRIGSEL_TIMER16BRKIN register write is disabled.
30:8	Reserved	Must be kept at reset value.
7:0	INSEL0[7:0]	Trigger input source selection for output0 These bits are used to select trigger input signal connected to output0. The output is used as the source of TIMER16_BRKIN0 trigger input. For the detailed configuration, please refer to ***Table 9-1. Trigger input bit fields selection***.

9.5.15. Trigger selection for TIMER40_BRKIN register (TRIGSEL_TIMER40BRKIN)

Address offset: 0x38

Reset value: 0x0000 0082

This register has to be accessed by word (32-bit).

31	30	29	28	27	26	25	24	23	22	21	20	19	18	17	16
LK	Reserved														
rs															

15	14	13	12	11	10	9	8	7	6	5	4	3	2	1	0
Reserved								INSEL0[7:0]							
											rw				

Bits	Fields	Descriptions

31	LK	TRIGSEL register lock. This bit is set by software and cleared only by a system reset. When it is set, it disables write access to TRIGSEL_TIMER40BRKIN register. 0: TRIGSEL_TIMER40BRKIN register write is enabled. 1: TRIGSEL_TIMER40BRKIN register write is disabled.
30:8	Reserved	Must be kept at reset value.
7:0	INSEL0[7:0]	Trigger input source selection for output0 These bits are used to select trigger input signal connected to output0. The output is used as the source of TIMER40_BRKIN0 trigger input. For the detailed configuration, please refer to ***Table 9-1. Trigger input bit fields selection***.

9.5.16. Trigger selection for TIMER41_BRKIN register (TRIGSEL_TIMER41BRKIN)

Address offset: 0x3C
Reset value: 0x0000 0089

This register has to be accessed by word (32-bit).

31	30	29	28	27	26	25	24	23	22	21	20	19	18	17	16
LK	Reserved														
rs															

15	14	13	12	11	10	9	8	7	6	5	4	3	2	1	0
Reserved								INSEL0[7:0]							
											rw				

Bits	Fields	Descriptions
31	LK	TRIGSEL register lock. This bit is set by software and cleared only by a system reset. When it is set, it disables write access to TRIGSEL_TIMER41BRKIN register. 0: TRIGSEL_TIMER41BRKIN register write is enabled. 1: TRIGSEL_TIMER41BRKIN register write is disabled.
30:8	Reserved	Must be kept at reset value.
7:0	INSEL0[7:0]	Trigger input source selection for output0 These bits are used to select trigger input signal connected to output0. The output is used as the source of TIMER41_BRKIN0 trigger input. For the detailed configuration, please refer to ***Table 9-1. Trigger input bit fields selection***.

9.5.17. Trigger selection for TIMER42_BRKIN register (TRIGSEL_TIMER42BRKIN)

Address offset: 0x40

Reset value: 0x0000 0090

This register has to be accessed by word (32-bit).

31	30	29	28	27	26	25	24	23	22	21	20	19	18	17	16
LK	Reserved														
rs															

15	14	13	12	11	10	9	8	7	6	5	4	3	2	1	0
Reserved								INSEL0[7:0]							
											rw				

Bits	Fields	Descriptions
31	LK	TRIGSEL register lock. This bit is set by software and cleared only by a system reset. When it is set, it disables write access to TRIGSEL_TIMER42BRKIN register. 0: TRIGSEL_TIMER42BRKIN register write is enabled. 1: TRIGSEL_TIMER42BRKIN register write is disabled.
30:8	Reserved	Must be kept at reset value.
7:0	INSEL0[7:0]	Trigger input source selection for output0 These bits are used to select trigger input signal connected to output0. The output is used as the source of TIMER42_BRKIN0 trigger input. For the detailed configuration, please refer to ***Table 9-1. Trigger input bit fields selection***.

9.5.18. Trigger selection for TIMER43_BRKIN register (TRIGSEL_TIMER43BRKIN)

Address offset: 0x44

Reset value: 0x0000 0097

This register has to be accessed by word (32-bit).

31	30	29	28	27	26	25	24	23	22	21	20	19	18	17	16
LK	Reserved														
rs															

15	14	13	12	11	10	9	8	7	6	5	4	3	2	1	0
Reserved								INSEL0[7:0]							
											rw				

Bits	Fields	Descriptions

31	LK	TRIGSEL register lock. This bit is set by software and cleared only by a system reset. When it is set, it disables write access to TRIGSEL_TIMER43BRKIN register. 0: TRIGSEL_TIMER43BRKIN register write is enabled. 1: TRIGSEL_TIMER43BRKIN register write is disabled.
30:8	Reserved	Must be kept at reset value.
7:0	INSEL0[7:0]	Trigger input source selection for output0 These bits are used to select trigger input signal connected to output0. The output is used as the source of TIMER43_BRKIN0 trigger input. For the detailed configuration, please refer to ***Table 9-1. Trigger input bit fields selection***.

9.5.19. Trigger selection for TIMER44_BRKIN register (TRIGSEL_TIMER44BRKIN)

Address offset: 0x48
Reset value: 0x0000 009e

This register has to be accessed by word (32-bit).

31	30	29	28	27	26	25	24	23	22	21	20	19	18	17	16
LK	Reserved														
rs															

15	14	13	12	11	10	9	8	7	6	5	4	3	2	1	0
Reserved								INSEL0[7:0]							
											rw				

Bits	Fields	Descriptions
31	LK	TRIGSEL register lock. This bit is set by software and cleared only by a system reset. When it is set, it disables write access to TRIGSEL_TIMER44BRKIN register. 0: TRIGSEL_TIMER44BRKIN register write is enabled. 1: TRIGSEL_TIMER44BRKIN register write is disabled.
30:8	Reserved	Must be kept at reset value.
7:0	INSEL0[7:0]	Trigger input source selection for output0 These bits are used to select trigger input signal connected to output0. The output is used as the source of TIMER44_BRKIN0 trigger input. For the detailed configuration, please refer to ***Table 9-1. Trigger input bit fields selection***.

9.5.20. Trigger selection for CAN0 register (TRIGSEL_CAN0)

Address offset: 0x4C

Reset value: 0x0000 003d

This register has to be accessed by word (32-bit).

31	30	29	28	27	26	25	24	23	22	21	20	19	18	17	16
LK	Reserved														
rs															

15	14	13	12	11	10	9	8	7	6	5	4	3	2	1	0
Reserved								INSEL0[7:0]							
											rw				

Bits	Fields	Descriptions
31	LK	TRIGSEL register lock. This bit is set by software and cleared only by a system reset. When it is set, it disables write access to TRIGSEL_CAN0 register. 0: TRIGSEL_CAN0 register write is enabled. 1: TRIGSEL_CAN0 register write is disabled.
30:8	Reserved	Must be kept at reset value.
7:0	INSEL0[7:0]	Trigger input source selection for output0 These bits are used to select trigger input signal connected to output0. The output is used as the source of CAN0_EX_TIME_TICK trigger input. For the detailed configuration, please refer to ***Table 9-1. Trigger input bit fields selection***.

9.5.21. Trigger selection for CAN1 register (TRIGSEL_CAN1)

Address offset: 0x50

Reset value: 0x0000 003d

This register has to be accessed by word (32-bit).

31	30	29	28	27	26	25	24	23	22	21	20	19	18	17	16
LK	Reserved														
rs															

15	14	13	12	11	10	9	8	7	6	5	4	3	2	1	0
Reserved								INSEL0[7:0]							
											rw				

Bits	Fields	Descriptions
31	LK	TRIGSEL register lock. This bit is set by software and cleared only by a system reset. When it is set, it disables write access to TRIGSEL_CAN1 register. 0: TRIGSEL_CAN1 register write is enabled. 1: TRIGSEL_CAN1 register write is disabled.
30:8	Reserved	Must be kept at reset value.

7:0	INSEL0[7:0]	Trigger input source selection for output0 These bits are used to select trigger input signal connected to output0. The output is used as the source of CAN1_EX_TIME_TICK trigger input. For the detailed configuration, please refer to ***Table 9-1. Trigger input bit fields selection***.

9.5.22. Trigger selection for CAN2 register (TRIGSEL_CAN2)

Address offset: 0x54

Reset value: 0x0000 003d

This register has to be accessed by word (32-bit).

31	30	29	28	27	26	25	24	23	22	21	20	19	18	17	16
LK	Reserved														
rs															

15	14	13	12	11	10	9	8	7	6	5	4	3	2	1	0
Reserved								INSEL0[7:0]							
											rw				

Bits	Fields	Descriptions
31	LK	TRIGSEL register lock. This bit is set by software and cleared only by a system reset. When it is set, it disables write access to TRIGSEL_CAN2 register. 0: TRIGSEL_CAN2 register write is enabled. 1: TRIGSEL_CAN2 register write is disabled.
30:8	Reserved	Must be kept at reset value.
7:0	INSEL0[7:0]	Trigger input source selection for output0 These bits are used to select trigger input signal connected to output0. The output is used as the source of CAN2_EX_TIME_TICK trigger input. For the detailed configuration, please refer to ***Table 9-1. Trigger input bit fields selection***.

9.5.23. Trigger selection for LPDTS register (TRIGSEL_LPDTS)

Address offset: 0x58

Reset value: 0x0000 0000

This register has to be accessed by word (32-bit).

31	30	29	28	27	26	25	24	23	22	21	20	19	18	17	16
LK	Reserved														
rs															

15	14	13	12	11	10	9	8	7	6	5	4	3	2	1	0
Reserved								INSEL0[7:0]							
											rw				

Bits	Fields	Descriptions
31	LK	TRIGSEL register lock. This bit is set by software and cleared only by a system reset. When it is set, it disables write access to TRIGSEL_LPDTS register. 0: TRIGSEL_LPDTS register write is enabled. 1: TRIGSEL_LPDTS register write is disabled.
30:8	Reserved	Must be kept at reset value.
7:0	INSEL0[7:0]	Trigger input source selection for output0 These bits are used to select trigger input signal connected to output0. The output is used as the source of LPDTS_TRG trigger input. For the detailed configuration, please refer to ***Table 9-1. Trigger input bit fields selection***.

9.5.24. Trigger selection for TIMER0_ETI register (TRIGSEL_TIMER0ETI)

Address offset: 0x5C

Reset value: 0x0000 0024

This register has to be accessed by word (32-bit).

31	30	29	28	27	26	25	24	23	22	21	20	19	18	17	16
LK	Reserved														
rs															

15	14	13	12	11	10	9	8	7	6	5	4	3	2	1	0
Reserved								INSEL0[7:0]							
											rw				

Bits	Fields	Descriptions
31	LK	TRIGSEL register lock. This bit is set by software and cleared only by a system reset. When it is set, it disables write access to TRIGSEL_TIMER0ETI register. 0: TRIGSEL_TIMER0ETI register write is enabled. 1: TRIGSEL_TIMER0ETI register write is disabled.
30:8	Reserved	Must be kept at reset value.
7:0	INSEL0[7:0]	Trigger input source selection for output0 These bits are used to select trigger input signal connected to output0. The output is used as the source of TIMER0_ETI trigger input. For the detailed configuration, please refer to ***Table 9-1. Trigger input bit fields selection***.

9.5.25. Trigger selection for TIMER1_ETI register (TRIGSEL_TIMER1ETI)

Address offset: 0x60

Reset value: 0x0000 002a

This register has to be accessed by word (32-bit).

31	30	29	28	27	26	25	24	23	22	21	20	19	18	17	16
LK	Reserved														
rs															

15	14	13	12	11	10	9	8	7	6	5	4	3	2	1	0
Reserved								INSEL0[7:0]							
											rw				

Bits	Fields	Descriptions
31	LK	TRIGSEL register lock. This bit is set by software and cleared only by a system reset. When it is set, it disables write access to TRIGSEL_TIMER1ETI register. 0: TRIGSEL_TIMER1ETI register write is enabled. 1: TRIGSEL_TIMER1ETI register write is disabled.
30:8	Reserved	Must be kept at reset value.
7:0	INSEL0[7:0]	Trigger input source selection for output0 These bits are used to select trigger input signal connected to output0. The output is used as the source of TIMER1_ETI trigger input. For the detailed configuration, please refer to ***Table 9-1. Trigger input bit fields selection***.

9.5.26. Trigger selection for TIMER2_ETI register (TRIGSEL_TIMER2ETI)

Address offset: 0x64

Reset value: 0x0000 0030

This register has to be accessed by word (32-bit).

31	30	29	28	27	26	25	24	23	22	21	20	19	18	17	16
LK	Reserved														
rs															

15	14	13	12	11	10	9	8	7	6	5	4	3	2	1	0
Reserved								INSEL0[7:0]							
											rw				

Bits	Fields	Descriptions
31	LK	TRIGSEL register lock. This bit is set by software and cleared only by a system reset. When it is set, it disables write access to TRIGSEL_TIMER2ETI register. 0: TRIGSEL_TIMER2ETI register write is enabled. 1: TRIGSEL_TIMER2ETI register write is disabled.
30:8	Reserved	Must be kept at reset value.

7:0	INSEL0[7:0]	Trigger input source selection for output0 These bits are used to select trigger input signal connected to output0. The output is used as the source of TIMER2_ETI trigger input. For the detailed configuration, please refer to ***Table 9-1. Trigger input bit fields selection***.

9.5.27. Trigger selection for TIMER3_ETI register (TRIGSEL_TIMER3ETI)

Address offset: 0x68

Reset value: 0x0000 0036

This register has to be accessed by word (32-bit).

31	30	29	28	27	26	25	24	23	22	21	20	19	18	17	16
LK	Reserved														
rs															

15	14	13	12	11	10	9	8	7	6	5	4	3	2	1	0
Reserved								INSEL0[7:0]							
											rw				

Bits	Fields	Descriptions
31	LK	TRIGSEL register lock. This bit is set by software and cleared only by a system reset. When it is set, it disables write access to TRIGSEL_TIMER3ETI register. 0: TRIGSEL_TIMER3ETI register write is enabled. 1: TRIGSEL_TIMER3ETI register write is disabled.
30:8	Reserved	Must be kept at reset value.
7:0	INSEL0[7:0]	Trigger input source selection for output0 These bits are used to select trigger input signal connected to output0. The output is used as the source of TIMER3_ETI trigger input. For the detailed configuration, please refer to ***Table 9-1. Trigger input bit fields selection***.

9.5.28. Trigger selection for TIMER4_ETI register (TRIGSEL_TIMER4ETI)

Address offset: 0x6C

Reset value: 0x0000 003c

This register has to be accessed by word (32-bit).

31	30	29	28	27	26	25	24	23	22	21	20	19	18	17	16
LK	Reserved														
rs															

15	14	13	12	11	10	9	8	7	6	5	4	3	2	1	0
Reserved								INSEL0[7:0]							
											rw				

Bits	Fields	Descriptions
31	LK	TRIGSEL register lock. This bit is set by software and cleared only by a system reset. When it is set, it disables write access to TRIGSEL_TIMER4ETI register. 0: TRIGSEL_TIMER4ETI register write is enabled. 1: TRIGSEL_TIMER4ETI register write is disabled.
30:8	Reserved	Must be kept at reset value.
7:0	INSEL0[7:0]	Trigger input source selection for output0 These bits are used to select trigger input signal connected to output0. The output is used as the source of TIMER4_ETI trigger input. For the detailed configuration, please refer to ***Table 9-1. Trigger input bit fields selection***.

9.5.29. Trigger selection for TIMER7_ETI register (TRIGSEL_TIMER7ETI)

Address offset: 0x70

Reset value: 0x0000 0052

This register has to be accessed by word (32-bit).

31	30	29	28	27	26	25	24	23	22	21	20	19	18	17	16
LK	Reserved														
rs															

15	14	13	12	11	10	9	8	7	6	5	4	3	2	1	0
Reserved								INSEL0[7:0]							
											rw				

Bits	Fields	Descriptions
31	LK	TRIGSEL register lock. This bit is set by software and cleared only by a system reset. When it is set, it disables write access to TRIGSEL_TIMER7ETI register. 0: TRIGSEL_TIMER7ETI register write is enabled. 1: TRIGSEL_TIMER7ETI register write is disabled.
30:8	Reserved	Must be kept at reset value.
7:0	INSEL0[7:0]	Trigger input source selection for output0 These bits are used to select trigger input signal connected to output0. The output is used as the source of TIMER7_ETI trigger input. For the detailed configuration, please refer to ***Table 9-1. Trigger input bit fields selection***.

9.5.30. Trigger selection for TIMER22_ETI register (TRIGSEL_TIMER22ETI)

Address offset: 0x74

Reset value: 0x0000 0069

This register has to be accessed by word (32-bit).

31	30	29	28	27	26	25	24	23	22	21	20	19	18	17	16
LK	Reserved														
rs															

15	14	13	12	11	10	9	8	7	6	5	4	3	2	1	0
Reserved								INSEL0[7:0]							
											rw				

Bits	Fields	Descriptions
31	LK	TRIGSEL register lock. This bit is set by software and cleared only by a system reset. When it is set, it disables write access to TRIGSEL_TIMER22ETI register. 0: TRIGSEL_TIMER22ETI register write is enabled. 1: TRIGSEL_TIMER22ETI register write is disabled.
30:8	Reserved	Must be kept at reset value.
7:0	INSEL0[7:0]	Trigger input source selection for output0 These bits are used to select trigger input signal connected to output0. The output is used as the source of TIMER22_ETI trigger input. For the detailed configuration, please refer to ***Table 9-1. Trigger input bit fields selection***.

9.5.31. Trigger selection for TIMER23_ETI register (TRIGSEL_TIMER23ETI)

Address offset: 0x78

Reset value: 0x0000 006f

This register has to be accessed by word (32-bit).

31	30	29	28	27	26	25	24	23	22	21	20	19	18	17	16
LK	Reserved														
rs															

15	14	13	12	11	10	9	8	7	6	5	4	3	2	1	0
Reserved								INSEL0[7:0]							
											rw				

Bits	Fields	Descriptions
31	LK	TRIGSEL register lock. This bit is set by software and cleared only by a system reset. When it is set, it disables write access to TRIGSEL_TIMER23ETI register. 0: TRIGSEL_TIMER23ETI register write is enabled. 1: TRIGSEL_TIMER23ETI register write is disabled.
30:8	Reserved	Must be kept at reset value.

7:0	INSEL0[7:0]	Trigger input source selection for output0 These bits are used to select trigger input signal connected to output0. The output is used as the source of TIMER23_ETI trigger input. For the detailed configuration, please refer to ***Table 9-1. Trigger input bit fields selection***.

9.5.32. Trigger selection for TIMER30_ETI register (TRIGSEL_TIMER30ETI)

Address offset: 0x7C

Reset value: 0x0000 0075

This register has to be accessed by word (32-bit).

31	30	29	28	27	26	25	24	23	22	21	20	19	18	17	16
LK	Reserved														
rs															

15	14	13	12	11	10	9	8	7	6	5	4	3	2	1	0
Reserved								INSEL0[7:0]							
											rw				

Bits	Fields	Descriptions
31	LK	TRIGSEL register lock. This bit is set by software and cleared only by a system reset. When it is set, it disables write access to TRIGSEL_TIMER30ETI register. 0: TRIGSEL_TIMER30ETI register write is enabled. 1: TRIGSEL_TIMER30ETI register write is disabled.
30:8	Reserved	Must be kept at reset value.
7:0	INSEL0[7:0]	Trigger input source selection for output0 These bits are used to select trigger input signal connected to output0. The output is used as the source of TIMER30_ETI trigger input. For the detailed configuration, please refer to ***Table 9-1. Trigger input bit fields selection***.

9.5.33. Trigger selection for TIMER31_ETI register (TRIGSEL_TIMER31ETI)

Address offset: 0x80

Reset value: 0x0000 007b

This register has to be accessed by word (32-bit).

31	30	29	28	27	26	25	24	23	22	21	20	19	18	17	16
LK	Reserved														
rs															

15	14	13	12	11	10	9	8	7	6	5	4	3	2	1	0
Reserved								INSEL0[7:0]							
											rw				

Bits	Fields	Descriptions
31	LK	TRIGSEL register lock. This bit is set by software and cleared only by a system reset. When it is set, it disables write access to TRIGSEL_TIMER31ETI register. 0: TRIGSEL_TIMER31ETI register write is enabled. 1: TRIGSEL_TIMER31ETI register write is disabled.
30:8	Reserved	Must be kept at reset value.
7:0	INSEL0[7:0]	Trigger input source selection for output0 These bits are used to select trigger input signal connected to output0. The output is used as the source of TIMER31_ETI trigger input. For the detailed configuration, please refer to ***Table 9-1. Trigger input bit fields selection***.

9.5.34. Trigger selection for EDOUT register (TRIGSEL_EDOUT)

Address offset: 0x84

Reset value: 0x0000 0000

This register has to be accessed by word (32-bit).

31	30	29	28	27	26	25	24	23	22	21	20	19	18	17	16
LK	Reserved														
rs															

15	14	13	12	11	10	9	8	7	6	5	4	3	2	1	0
Reserved								INSEL0[7:0]							
											rw				

Bits	Fields	Descriptions
31	LK	TRIGSEL register lock. This bit is set by software and cleared only by a system reset. When it is set, it disables write access to TRIGSEL_EDOUT register. 0: TRIGSEL_EDOUT register write is enabled. 1: TRIGSEL_EDOUT register write is disabled.
30:8	Reserved	Must be kept at reset value.
7:0	INSEL0[7:0]	Trigger input source selection for output0 These bits are used to select trigger input signal connected to output0. The output is used as the souce of EDOUT_TRG trigger input. For the detailed configuration, please refer to ***Table 9-1. Trigger input bit fields selection***

9.5.35. Trigger selection for HPDF register (TRIGSEL_HPDF)

Address offset: 0x88

Reset value: 0x0000 0000

This register has to be accessed by word (32-bit).

31	30	29	28	27	26	25	24	23	22	21	20	19	18	17	16
LK	Reserved														
rs															

15	14	13	12	11	10	9	8	7	6	5	4	3	2	1	0
Reserved								INSEL0[7:0]							
											rw				

Bits	Fields	Descriptions
31	LK	TRIGSEL register lock. This bit is set by software and cleared only by a system reset. When it is set, it disables write access to TRIGSEL_HPDF register. 0: TRIGSEL_HPDF register write is enabled. 1: TRIGSEL_HPDF register write is disabled.
30:8	Reserved	Must be kept at reset value.
7:0	INSEL0[7:0]	Trigger input source selection for output0 These bits are used to select trigger input signal connected to output0. The output is used as the source of HPDF_ITRG trigger input. For the detailed configuration, please refer to ***Table 9-1. Trigger input bit fields selection***.

9.5.36. Trigger selection for TIMER0_ITI14 register (TRIGSEL_TIMER0ITI14)

Address offset: 0x8C

Reset value: 0x0000 0000

This register has to be accessed by word (32-bit).

31	30	29	28	27	26	25	24	23	22	21	20	19	18	17	16
LK	Reserved														
rs															

15	14	13	12	11	10	9	8	7	6	5	4	3	2	1	0
Reserved								INSEL0[7:0]							
											rw				

Bits	Fields	Descriptions
31	LK	TRIGSEL register lock. This bit is set by software and cleared only by a system reset. When it is set, it disables write access to TRIGSEL_TIMER0ITI14 register. 0: TRIGSEL_TIMER0ITI14 register write is enabled. 1: TRIGSEL_TIMER0ITI14 register write is disabled.
30:8	Reserved	Must be kept at reset value.

7:0	INSEL0[7:0]	Trigger input source selection for output0 These bits are used to select trigger input signal connected to output0. The output is used as the source of TIMER0_ITI14 trigger input. For the detailed configuration, please refer to ***Table 9-1. Trigger input bit fields selection***.

9.5.37. Trigger selection for TIMER1_ITI14 register (TRIGSEL_TIMER1ITI14)

Address offset: 0x90

Reset value: 0x0000 0000

This register has to be accessed by word (32-bit).

31	30	29	28	27	26	25	24	23	22	21	20	19	18	17	16
LK	Reserved														
rs															

15	14	13	12	11	10	9	8	7	6	5	4	3	2	1	0
Reserved								INSEL0[7:0]							
											rw				

Bits	Fields	Descriptions
31	LK	TRIGSEL register lock. This bit is set by software and cleared only by a system reset. When it is set, it disables write access to TRIGSEL_TIMER1ITI14 register. 0: TRIGSEL_TIMER1ITI14 register write is enabled. 1: TRIGSEL_TIMER1ITI14 register write is disabled.
30:8	Reserved	Must be kept at reset value.
7:0	INSEL0[7:0]	Trigger input source selection for output0 These bits are used to select trigger input signal connected to output0. The output is used as the source of TIMER1_ITI14 trigger input. For the detailed configuration, please refer to ***Table 9-1. Trigger input bit fields selection***.

9.5.38. Trigger selection for TIMER2_ITI14 register (TRIGSEL_TIMER2ITI14)

Address offset: 0x94

Reset value: 0x0000 0000

This register has to be accessed by word (32-bit).

31	30	29	28	27	26	25	24	23	22	21	20	19	18	17	16
LK	Reserved														
rs															

15	14	13	12	11	10	9	8	7	6	5	4	3	2	1	0
Reserved								INSEL0[7:0]							
											rw				

Bits	Fields	Descriptions
31	LK	TRIGSEL register lock. This bit is set by software and cleared only by a system reset. When it is set, it disables write access to TRIGSEL_TIMER2ITI14 register. 0: TRIGSEL_TIMER2ITI14 register write is enabled. 1: TRIGSEL_TIMER2ITI14 register write is disabled.
30:8	Reserved	Must be kept at reset value.
7:0	INSEL0[7:0]	Trigger input source selection for output0 These bits are used to select trigger input signal connected to output0. The output is used as the source of TIMER2_ITI14 trigger input. For the detailed configuration, please refer to ***Table 9-1. Trigger input bit fields selection***.

9.5.39. Trigger selection for TIMER3_ITI14 register (TRIGSEL_TIMER3ITI14)

Address offset: 0x98

Reset value: 0x0000 0000

This register has to be accessed by word (32-bit).

31	30	29	28	27	26	25	24	23	22	21	20	19	18	17	16
LK	Reserved														
rs															

15	14	13	12	11	10	9	8	7	6	5	4	3	2	1	0
Reserved								INSEL0[7:0]							
											rw				

Bits	Fields	Descriptions
31	LK	TRIGSEL register lock. This bit is set by software and cleared only by a system reset. When it is set, it disables write access to TRIGSEL_TIMER3ITI14 register. 0: TRIGSEL_TIMER3ITI14 register write is enabled. 1: TRIGSEL_TIMER3ITI14 register write is disabled.
30:8	Reserved	Must be kept at reset value.
7:0	INSEL0[7:0]	Trigger input source selection for output0 These bits are used to select trigger input signal connected to output0. The output is used as the source of TIMER3_ITI14 trigger input. For the detailed configuration, please refer to ***Table 9-1. Trigger input bit fields selection***.

9.5.40. Trigger selection for TIMER4_ITI14 register (TRIGSEL_TIMER4ITI14)

Address offset: 0x9C

Reset value: 0x0000 0000

This register has to be accessed by word (32-bit).

31	30	29	28	27	26	25	24	23	22	21	20	19	18	17	16
LK	Reserved														
rs															

15	14	13	12	11	10	9	8	7	6	5	4	3	2	1	0
Reserved								INSEL0[7:0]							
											rw				

Bits	Fields	Descriptions
31	LK	TRIGSEL register lock. This bit is set by software and cleared only by a system reset. When it is set, it disables write access to TRIGSEL_TIMER4ITI14 register. 0: TRIGSEL_TIMER4ITI14 register write is enabled. 1: TRIGSEL_TIMER4ITI14 register write is disabled.
30:8	Reserved	Must be kept at reset value.
7:0	INSEL0[7:0]	Trigger input source selection for output0 These bits are used to select trigger input signal connected to output0. The output is used as the source of TIMER4_ITI14 trigger input. For the detailed configuration, please refer to ***Table 9-1. Trigger input bit fields selection***.

9.5.41. Trigger selection for TIMER7_ITI14 register (TRIGSEL_TIMER7ITI14)

Address offset: 0xA0

Reset value: 0x0000 0000

This register has to be accessed by word (32-bit).

31	30	29	28	27	26	25	24	23	22	21	20	19	18	17	16
LK	Reserved														
rs															

15	14	13	12	11	10	9	8	7	6	5	4	3	2	1	0
Reserved								INSEL0[7:0]							
											rw				

Bits	Fields	Descriptions
31	LK	TRIGSEL register lock. This bit is set by software and cleared only by a system reset. When it is set, it disables write access to TRIGSEL_TIMER7ITI14 register. 0: TRIGSEL_TIMER7ITI14 register write is enabled. 1: TRIGSEL_TIMER7ITI14 register write is disabled.
30:8	Reserved	Must be kept at reset value.

7:0	INSEL0[7:0]	Trigger input source selection for output0 These bits are used to select trigger input signal connected to output0. The output is used as the source of TIMER7_ITI14 trigger input. For the detailed configuration, please refer to ***Table 9-1. Trigger input bit fields selection***.

9.5.42. Trigger selection for TIMER14_ITI14 register (TRIGSEL_TIMER14ITI14)

Address offset: 0xA4

Reset value: 0x0000 0000

This register has to be accessed by word (32-bit).

31	30	29	28	27	26	25	24	23	22	21	20	19	18	17	16
LK	Reserved														
rs															

15	14	13	12	11	10	9	8	7	6	5	4	3	2	1	0
Reserved								INSEL0[7:0]							
											rw				

Bits	Fields	Descriptions
31	LK	TRIGSEL register lock. This bit is set by software and cleared only by a system reset. When it is set, it disables write access to TRIGSEL_TIMER14ITI14 register. 0: TRIGSEL_TIMER14ITI14 register write is enabled. 1: TRIGSEL_TIMER14ITI14 register write is disabled.
30:8	Reserved	Must be kept at reset value.
7:0	INSEL0[7:0]	Trigger input source selection for output0 These bits are used to select trigger input signal connected to output0. The output is used as the source of TIMER14_ITI14 trigger input. For the detailed configuration, please refer to ***Table 9-1. Trigger input bit fields selection***.

9.5.43. Trigger selection for TIMER22_ITI14 register (TRIGSEL_TIMER22ITI14)

Address offset: 0xA8

Reset value: 0x0000 0000

This register has to be accessed by word (32-bit).

31	30	29	28	27	26	25	24	23	22	21	20	19	18	17	16
LK	Reserved														
rs															

15	14	13	12	11	10	9	8	7	6	5	4	3	2	1	0
Reserved								INSEL0[7:0]							
											rw				

Bits	Fields	Descriptions
31	LK	TRIGSEL register lock. This bit is set by software and cleared only by a system reset. When it is set, it disables write access to TRIGSEL_TIMER22ITI14 register. 0: TRIGSEL_TIMER22ITI14 register write is enabled. 1: TRIGSEL_TIMER22ITI14 register write is disabled.
30:8	Reserved	Must be kept at reset value.
7:0	INSEL0[7:0]	Trigger input source selection for output0 These bits are used to select trigger input signal connected to output0. The output is used as the source of TIMER22_ITI14 trigger input. For the detailed configuration, please refer to ***Table 9-1. Trigger input bit fields selection***.

9.5.44. Trigger selection for TIMER23_ITI14 register (TRIGSEL_TIMER23ITI14)

Address offset: 0xAC

Reset value: 0x0000 0000

This register has to be accessed by word (32-bit).

31	30	29	28	27	26	25	24	23	22	21	20	19	18	17	16
LK	Reserved														
rs															

15	14	13	12	11	10	9	8	7	6	5	4	3	2	1	0
Reserved								INSEL0[7:0]							
											rw				

Bits	Fields	Descriptions
31	LK	TRIGSEL register lock. This bit is set by software and cleared only by a system reset. When it is set, it disables write access to TRIGSEL_TIMER23ITI14 register. 0: TRIGSEL_TIMER23ITI14 register write is enabled. 1: TRIGSEL_TIMER23ITI14 register write is disabled.
30:8	Reserved	Must be kept at reset value.
7:0	INSEL0[7:0]	Trigger input source selection for output0 These bits are used to select trigger input signal connected to output0. The output is used as the source of TIMER23_ITI14 trigger input. For the detailed configuration, please refer to ***Table 9-1. Trigger input bit fields selection***.

9.5.45. Trigger selection for TIMER30_ITI14 register (TRIGSEL_TIMER30ITI14)

Address offset: 0xB0

Reset value: 0x0000 0000

This register has to be accessed by word (32-bit).

31	30	29	28	27	26	25	24	23	22	21	20	19	18	17	16
LK	Reserved														
rs															

15	14	13	12	11	10	9	8	7	6	5	4	3	2	1	0
Reserved								INSEL0[7:0]							
											rw				

Bits	Fields	Descriptions
31	LK	TRIGSEL register lock. This bit is set by software and cleared only by a system reset. When it is set, it disables write access to TRIGSEL_TIMER30ITI14 register. 0: TRIGSEL_TIMER30ITI14 register write is enabled. 1: TRIGSEL_TIMER30ITI14 register write is disabled.
30:8	Reserved	Must be kept at reset value.
7:0	INSEL0[7:0]	Trigger input source selection for output0 These bits are used to select trigger input signal connected to output0. The output is used as the source of TIMER30_ITI14 trigger input. For the detailed configuration, please refer to ***Table 9-1. Trigger input bit fields selection***.

9.5.46. Trigger selection for TIMER31_ITI14 register (TRIGSEL_TIMER31ITI14)

Address offset: 0xB4

Reset value: 0x0000 0000

This register has to be accessed by word (32-bit).

31	30	29	28	27	26	25	24	23	22	21	20	19	18	17	16
LK	Reserved														
rs															

15	14	13	12	11	10	9	8	7	6	5	4	3	2	1	0
Reserved								INSEL0[7:0]							
											rw				

Bits	Fields	Descriptions
31	LK	TRIGSEL register lock. This bit is set by software and cleared only by a system reset. When it is set, it disables write access to TRIGSEL_TIMER31ITI14 register. 0: TRIGSEL_TIMER31ITI14 register write is enabled. 1: TRIGSEL_TIMER31ITI14 register write is disabled.
30:8	Reserved	Must be kept at reset value.

7:0	INSEL0[7:0]	Trigger input source selection for output0 These bits are used to select trigger input signal connected to output0. The output is used as the source of TIMER31_ITI14 trigger input. For the detailed configuration, please refer to ***Table 9-1. Trigger input bit fields selection***.

9.5.47. Trigger selection for TIMER40_ITI14 register (TRIGSEL_TIMER40ITI14)

Address offset: 0xB8

Reset value: 0x0000 0000

This register has to be accessed by word (32-bit).

31	30	29	28	27	26	25	24	23	22	21	20	19	18	17	16
LK	Reserved														
rs															

15	14	13	12	11	10	9	8	7	6	5	4	3	2	1	0
Reserved								INSEL0[7:0]							
											rw				

Bits	Fields	Descriptions
31	LK	TRIGSEL register lock. This bit is set by software and cleared only by a system reset. When it is set, it disables write access to TRIGSEL_TIMER40ITI14 register. 0: TRIGSEL_TIMER40ITI14 register write is enabled. 1: TRIGSEL_TIMER40ITI14 register write is disabled.
30:8	Reserved	Must be kept at reset value.
7:0	INSEL0[7:0]	Trigger input source selection for output0 These bits are used to select trigger input signal connected to output0. The output is used as the source of TIMER40_ITI14 trigger input. For the detailed configuration, please refer to ***Table 9-1. Trigger input bit fields selection***.

9.5.48. Trigger selection for TIMER41_ITI14 register (TRIGSEL_TIMER41ITI14)

Address offset: 0xBC

Reset value: 0x0000 0000

This register has to be accessed by word (32-bit).

31	30	29	28	27	26	25	24	23	22	21	20	19	18	17	16
LK	Reserved														
rs															

15	14	13	12	11	10	9	8	7	6	5	4	3	2	1	0
Reserved								INSEL0[7:0]							
											rw				

Bits	Fields	Descriptions
31	LK	TRIGSEL register lock. This bit is set by software and cleared only by a system reset. When it is set, it disables write access to TRIGSEL_TIMER41ITI14 register. 0: TRIGSEL_TIMER41ITI14 register write is enabled. 1: TRIGSEL_TIMER41ITI14 register write is disabled.
30:8	Reserved	Must be kept at reset value.
7:0	INSEL0[7:0]	Trigger input source selection for output0 These bits are used to select trigger input signal connected to output0. The output is used as the source of TIMER41_ITI14 trigger input. For the detailed configuration, please refer to ***Table 9-1. Trigger input bit fields selection***.

9.5.49. Trigger selection for TIMER42_ITI14 register (TRIGSEL_TIMER42ITI14)

Address offset: 0xC0

Reset value: 0x0000 0000

This register has to be accessed by word (32-bit).

31	30	29	28	27	26	25	24	23	22	21	20	19	18	17	16
LK	Reserved														
rs															

15	14	13	12	11	10	9	8	7	6	5	4	3	2	1	0
Reserved								INSEL0[7:0]							
											rw				

Bits	Fields	Descriptions
31	LK	TRIGSEL register lock. This bit is set by software and cleared only by a system reset. When it is set, it disables write access to TRIGSEL_TIMER42ITI14 register. 0: TRIGSEL_TIMER42ITI14 register write is enabled. 1: TRIGSEL_TIMER42ITI14 register write is disabled.
30:8	Reserved	Must be kept at reset value.
7:0	INSEL0[7:0]	Trigger input source selection for output0 These bits are used to select trigger input signal connected to output0. The output is used as the source of TIMER42_ITI14 trigger input. For the detailed configuration, please refer to ***Table 9-1. Trigger input bit fields selection***.

9.5.50. Trigger selection for TIMER43_ITI14 register (TRIGSEL_TIMER43ITI14)

Address offset: 0xC4

Reset value: 0x0000 0000

This register has to be accessed by word (32-bit).

31	30	29	28	27	26	25	24	23	22	21	20	19	18	17	16
LK	Reserved														
rs															

15	14	13	12	11	10	9	8	7	6	5	4	3	2	1	0
Reserved								INSEL0[7:0]							
											rw				

Bits	Fields	Descriptions
31	LK	TRIGSEL register lock. This bit is set by software and cleared only by a system reset. When it is set, it disables write access to TRIGSEL_TIMER43ITI14 register. 0: TRIGSEL_TIMER43ITI14 register write is enabled. 1: TRIGSEL_TIMER43ITI14 register write is disabled.
30:8	Reserved	Must be kept at reset value.
7:0	INSEL0[7:0]	Trigger input source selection for output0 These bits are used to select trigger input signal connected to output0. The output is used as the source of TIMER43_ITI14 trigger input. For the detailed configuration, please refer to ***Table 9-1. Trigger input bit fields selection***.

9.5.51. Trigger selection for TIMER44_ITI14 register (TRIGSEL_TIMER44ITI14)

Address offset: 0xC8

Reset value: 0x0000 0000

This register has to be accessed by word (32-bit).

31	30	29	28	27	26	25	24	23	22	21	20	19	18	17	16
LK	Reserved														
rs															

15	14	13	12	11	10	9	8	7	6	5	4	3	2	1	0
Reserved								INSEL0[7:0]							
											rw				

Bits	Fields	Descriptions
31	LK	TRIGSEL register lock. This bit is set by software and cleared only by a system reset. When it is set, it disables write access to TRIGSEL_TIMER44ITI14 register. 0: TRIGSEL_TIMER44ITI14 register write is enabled. 1: TRIGSEL_TIMER44ITI14 register write is disabled.
30:8	Reserved	Must be kept at reset value.

7:0	INSEL0[7:0]	Trigger input source selection for output0 These bits are used to select trigger input signal connected to output0. The output is used as the source of TIMER44_ITI14 trigger input. For the detailed configuration, please refer to ***Table 9-1. Trigger input bit fields selection***.

10. General-purpose and alternate-function I/Os (GPIO and AFIO)

10.1. Overview

There are up to 133 general purpose I/O pins (GPIO), named PA0~PA10, PA13~PA15, PB0~PB15, PC0~PC15, PD0~PD15, PE0~PE15, PF0~PF15, PG0~PG15, PH0~PH15, PJ8~PJ11, PK0~PK2 for the device to implement logic input/output functions. Each GPIO port has related control and configuration registers to satisfy the requirements of specific applications. The external interrupts on the GPIO pins of the device have related control and configuration registers in the Interrupt/Event Controller Unit (EXTI).

The GPIO ports are pin-shared with other alternative functions (AFs) to obtain maximum flexibility on the package pins. The GPIO pins can be used as alternative functional pins by configuring the corresponding registers regardless of the AF input or output pins.

Each of the GPIO pins can be configured by software as output (push-pull or open-drain), input, peripheral alternate function or analog mode. Each GPIO pin can be configured as pull-up, pull-down or no pull-up/pull-down. All GPIOs are high-current capable except for analog mode.

10.2. Characteristics

- Input/output direction control.
- Schmitt trigger input function enable control.
- Each pin weak pull-up/pull-down function.
- Output push-pull/open drain enable control.
- Output set/reset control.
- External interrupt with programmable trigger edge – using EXTI configuration registers.
- Analog input/output configuration.
- Alternate function input/output configuration.
- Port configuration lock.
- Single cycle toggle output capability.

10.3. Function overview

Each of the general-purpose I/O ports can be configured as GPIO inputs, GPIO outputs, AF function or analog mode by GPIO 32-bit configuration registers (GPIOx_CTL). When select AF function, the pad input or output is decided by selected AF function output enable. When the port is output (GPIO output or AFIO output), it can be configured as push-pull or open drain mode by GPIO output mode registers (GPIOx_OMODE). And the port max speed can

be configured by GPIO output speed registers (GPIOx_OSPD). Each port can be configured as floating (no pull-up and pull-down), pull-up or pull-down function by GPIO pull-up/pull-down registers (GPIOx_PUD).

Table 10-1. GPIO configuration table

PAD TYPE			CTLy	OMy	PUDy
GPIO INPUT	X	Floating	00	X	00
		pull-up			01
		pull-down			10
GPIO OUTPUT	push-pull	Floating	01	0	00
		pull-up			01
		pull-down			10
	open-drain	Floating		1	00
		pull-up			01
		pull-down			10
AFIO INPUT	X	Floating	10	X	00
		pull-up			01
		pull-down			10
AFIO OUTPUT	push-pull	Floating	10	0	00
		pull-up			01
		pull-down			10
	open-drain	Floating		1	00
		pull-up			01
		pull-down			10
ANALOG	X	X	11	X	XX

Figure 10-1. Basic structure of a standard I/O port bit shows the basic structure of an I/O port bit.

Figure 10-1. Basic structure of a standard I/O port bit

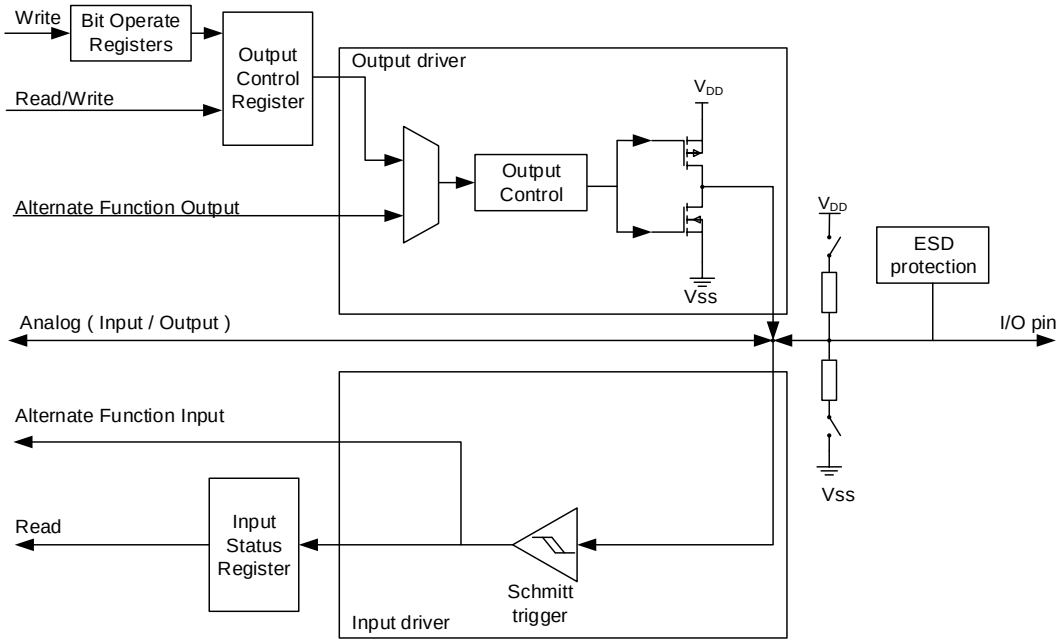

10.3.1. GPIO pin configuration

During or just after the reset period, the alternative functions are all inactive and the GPIO ports (except ports A/B) are configured into the input floating mode that input disabled without Pull-Up(PU)/Pull-Down(PD) resistors. But the JTAG/Serial-Wired Debug pins are in input PU/PD mode after reset:

PA15: JTDI in PU mode
PA14: JTCK / SWCLK in PD mode
PA13: JTMS / SWDIO in PU mode
PB4: NJTRST in PU mode
PB3: JTDO in output mode

The GPIO pins can be configured as inputs or outputs. When the GPIO pins are configured as input pins, all GPIO pins have an internal weak pull-up and weak pull-down which can be chosen. And the data on the external pins can be captured at every AHB clock cycle to the port input status register (GPIOx_ISTAT).

When the GPIO pins are configured as output pins, user can configure the speed of the ports. And chooses the output driver mode: Push-Pull or Open-Drain mode. The value of the port output control register (GPIOx_OCTL) is output on the I/O pin.

There is no need to read-then-write when programming the GPIOx_OCTL at bit level, the user can modify only one or several bits in a single atomic AHB write access by programming ‘1’ to the bit operate register (GPIOx_BOP, or for clearing only GPIOx_BC, or for toggle only GPIOx_TG). The other bits will not be affected.

10.3.2. External interrupt/event lines

All ports have external interrupt capability. To use external interrupt lines, the port must be configured as input mode.

10.3.3. Alternate functions (AF)

When the port is configured as AFIO (set CTLy bits to “0b10”, which is in GPIOx_CTL registers), the port is used as peripheral alternate functions. Each port has sixteen alternate functions can be configured by GPIO alternate functions selected registers (GPIOx_AFSELy (y = 0,1)). The detail alternate function assignments for each port are in the device datasheet.

10.3.4. Additional functions

Some pins have additional functions, which have priority over the configuration in the standard GPIO registers. When for ADC, DAC, CMP or additional functions, the port must be configured as analog mode. When for RTC, WKUPx and oscillators additional functions, the port type is set automatically by related RTC, PMU and RCU registers. These ports can be used as normal GPIO when the additional functions disabled.

10.3.5. Input configuration

When GPIO pin is configured as input:

- The schmitt trigger input is enabled.
- The weak pull-up and pull-down resistors could be chosen.
- Every AHB clock cycle the data present on the I/O pin is got to the port input status register.
- The output buffer is disabled.

Figure 10-2. Input configuration shows the input configuration.

Figure 10-2. Input configuration

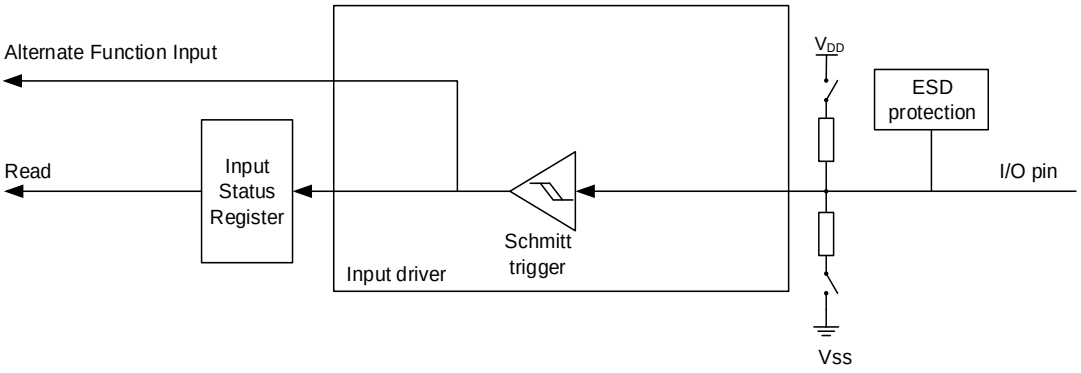

10.3.6. Output configuration

When GPIO pin is configured as output:

- The schmitt trigger input is enabled.
- The weak pull-up and pull-down resistors could be chosen.
- The output buffer is enabled.
- Open Drain Mode: The pad output low level when a “0” in the output control register; while the pad leaves Hi-Z when a “1” in the output control register.
- Push-Pull Mode: The pad output low level when a “0” in the output control register; while the pad output high level when a “1” in the output control register.
- A read access to the port output control register gets the last written value.
- A read access to the port input status register gets the I/O state.

Figure 10-3. Output configuration shows the output configuration.

Figure 10-3. Output configuration

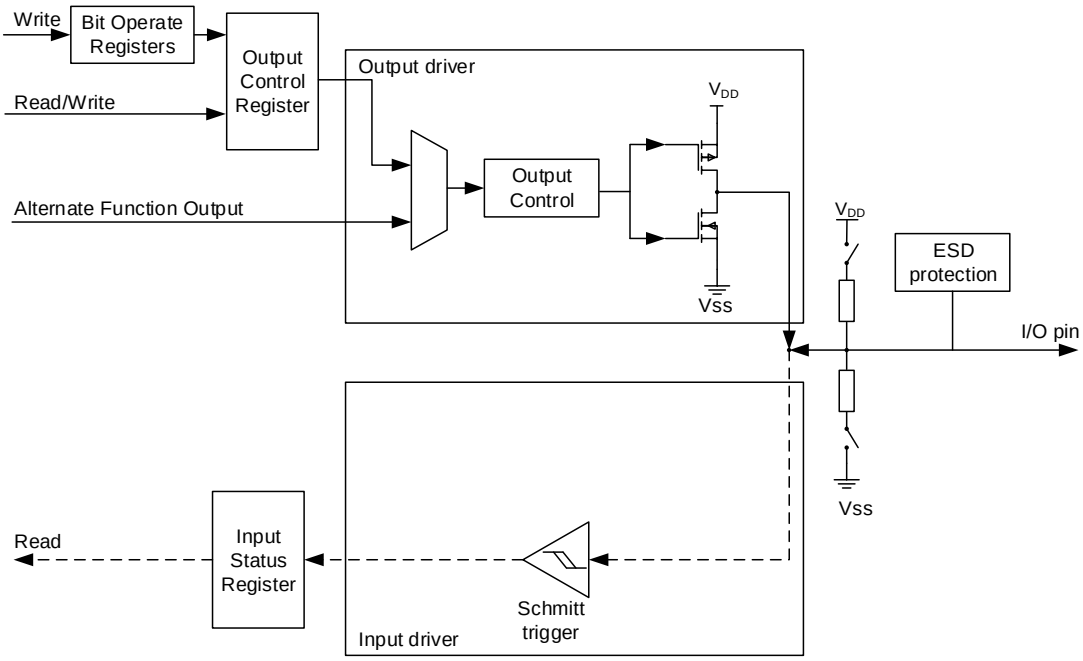

10.3.7. Analog configuration

When GPIO pin is used as analog configuration:

- The weak pull-up and pull-down resistors are disabled.
- The output buffer is disabled.
- The schmitt trigger input is disabled.
- The port input status register of this I/O port bit is “0”.

Figure 10-4. Analog configuration shows the analog configuration.

Figure 10-4. Analog configuration

10.3.8. Alternate function (AF) configuration

To suit for different device packages, the GPIO supports some alternate functions mapped to some other pins by software.

When be configured as alternate function:

- The output buffer is enabled in open-drain or push-pull configuration.
- The output buffer is driven by the peripheral.
- The schmitt trigger input is enabled.
- The weak pull-up and pull-down resistors could be chosen.
- The I/O pin data is stored into the port input status register every AHB clock.
- A read access to the port input status register gets the I/O state.
- A read access to the port output control register gets the last written value.

Figure 10-5. Alternate function configuration shows the alternate function configuration.

Figure 10-5. Alternate function configuration

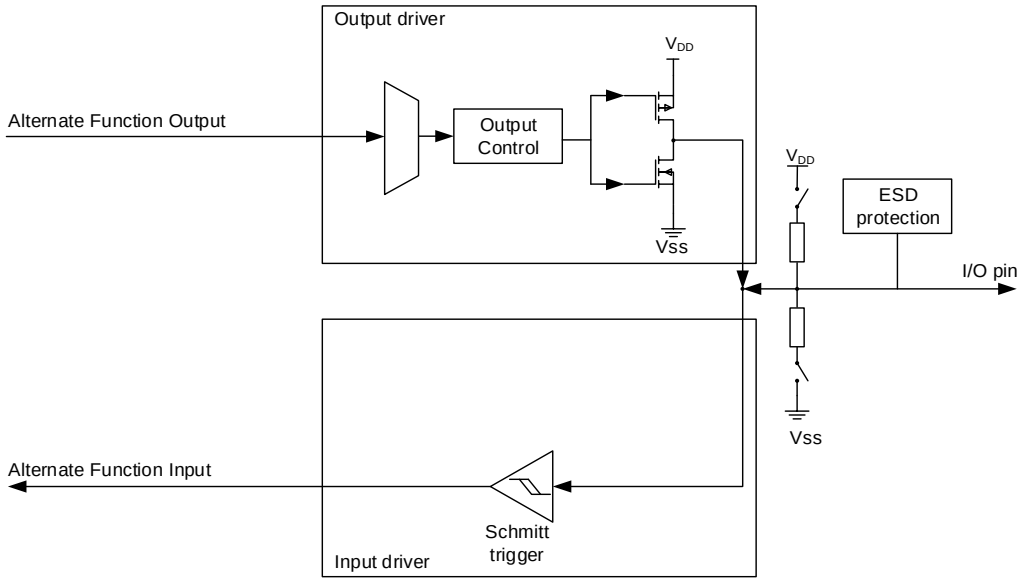

10.3.9. GPIO locking function

The locking mechanism allows the IO configuration to be protected.

The protected registers are GPIOx_CTL, GPIOx_OMODE, GPIOx_OSPD, GPIOx_PUD and GPIOx_AFSELy (y=0, 1). It allows the I/O configuration to be frozen by the 32-bit locking

register (GPIOx_LOCK). When the special LOCK sequence has occurred on LKK bit in GPIOx_LOCK register and the LKy bit is set in GPIOx_LOCK register, the corresponding port is locked and the corresponding port configuration cannot be modified until the next reset. It recommended to be used in the configuration of driving a power module.

10.3.10. GPIO single cycle toggle function

GPIO could toggle the I/O output level in single AHB cycle by writing 1 to the corresponding bit of GPIOx_TG register. The output signal frequency could up to the half of the AHB clock.

10.3.11. I/O compensation unit

The compensation unit is used to control the commutation slew rate (tfall/trise) to reduce I/O noise on the power supply.

This unit provides the best compensation code under conditions such as current temperature and environment. When the CPS_RDY bit of SYSCFG_CPSCTL is set, the compensation code stored in this area can be read. The user can also configure the compensation code by programming the SYSCFG_CPSCCCFG register.

The I/O compensation unit has 2 voltage ranges: 1.62 to 2.0V and 2.7 to 3.6V. Both voltage ranges here refer to the VDD voltage range of the chip.When VDD is 1.62 to 2.0V, the I/O speed is low because the VDD voltage is low. Therefore, set IOSPDOP to 1 can improve the I/O speed. When VDD is 2.7V to 3.6V, the VDD voltage is high enough and the I/O speed is fast. Therefore, IOSPDOP is not required to set.

10.3.12. Analog configuration for ADC

Some pins are connected directly to PA0_C、PA1_C、PC2_C and PC3_C ADC analog input as show ***Figure 10-6. Analog configuration for ADC***: Pxy_C and Pxy pins are directly connected through analog switches (refer system register).

Figure 10-6. Analog configuration for ADC

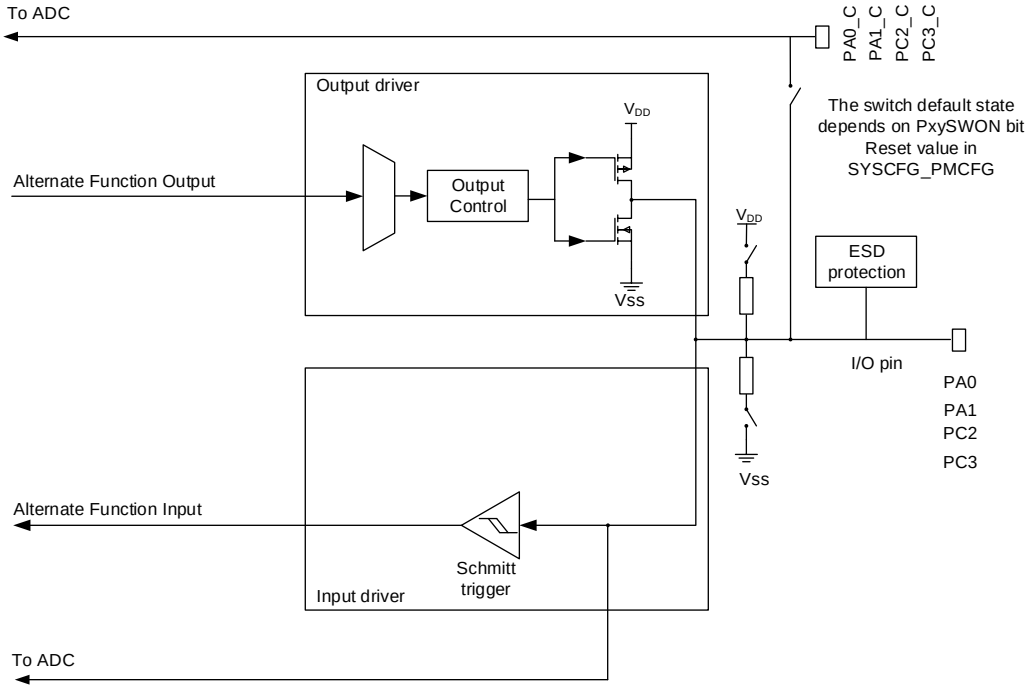

10.3.13. Input filtering

The type of input filtering for each GPIO pin can be select by configuring GPIOx_IFTP register. In the case of GPIO, filtering can be specified to synchronize only to CK_AHB or through the sampling window. For pins configured as peripheral input, in addition to synchronization to CK_AHB or through the sampling window, the input can also be asynchronous.

Asynchronous input

This mode is used for peripherals that do not need to input synchronization or perform synchronization by the peripheral itself. If the pin is used as GPIO, the asynchronous option is invalid, and the input filter is synchronized to CK_AHB by default.

Note: When the peripheral performs synchronization by itself, using input synchronization may result in unexpected results. In this case, the user should ensure that GPIO is configured asynchronously.

Synchronization to CK_AHB only

In this mode, the input signal is only associated with CK_AHB synchronization. Since the input signal is asynchronous, it may need a delay period of CK_AHB to change the input of MCU. The signal will not be further filtered after that.

Filtering using the sampling window

In this mode, the signal first communicates with the system clock (CK_AHB), and then the filtering process through the specified number of cycles will be carry out before allowing the input to be changed. Users need to specify two parameters for this type of filtering: sampling

period and sampling times.

Figure 10-7. Filtering using the sampling window

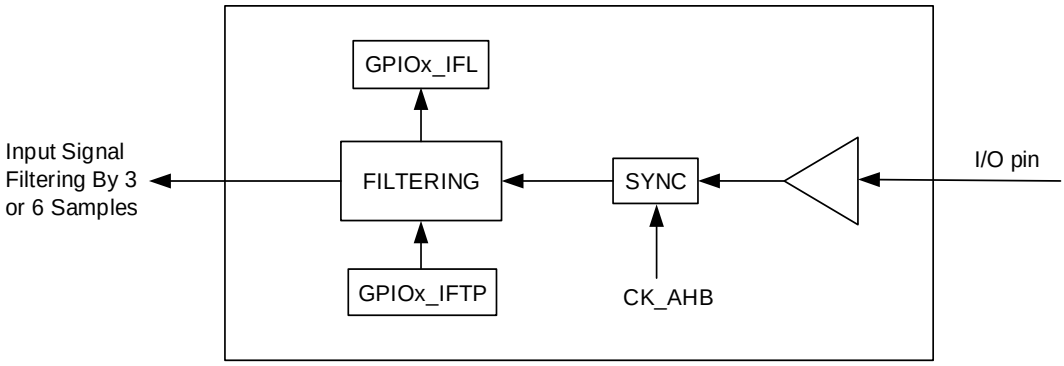

Samping period

To filtering the signal, the input signal is sampled in a fixed period. The sampling period is specified by the user and determines the duration between samples, or the samping frequency relative to CK_AHB.

The sampling period is determined by FLPRDx in register GPIOx_IFL. The sampling period can be configured as 8 input signal groups. For example, GPIO0 to GPIO7 use FLPRD0, GPIO8 to GPIO15 use FLPRD1.

If FLPRD0 in register GPIOx_IFL is 0, the sampling frequency is f_{CK_AHB}. For example, if f_{CK_AHB}=100MHz, the signal will be sampled at 100 MHz or every 10ns.

If FLPRD0 in register GPIOx_IFL is 0xFF(255), the sampling frequency is f_{CK_AHB}×1÷(2×FLPRDx). For example, if f_{CK_AHB}=100MHz, the signal will be sampled at 100MHz×1÷(2×255) or every 5.1us.

Sampling times

The sampling times of signal are 3 samples or 6 samples, detailed description in input filter type register (GPIOx_IFTP). When three or six consecutive cycles are the same, the change of input will be transmitted to MCU.

Total sampling window width

The sampling window is the time consumed to sample the input signal, as shown in ***Figure 10-8. Input filtering clock cycle***. The total width of the window can be determined by calculating the sampling period and sampling times

In order for the input filter to detect the change of the input, the signal level must be stable in the width of the sampling window or a longer time.

The number of sampling windows is always one less than the number of samples. For three sampling windows, the width of sampling window is two sampling periods. Similarly, for six sampling windows, the width of sampling window is five sampling periods.

Note: External signal variation and sampling period and CK_AHB is asynchronous. Due to the asynchronism of the external signal, the input should be stable for a time greater than the width of the sampling window to ensure that the change of the signal can be detected logically. The extra time required can reach the extra sampling period plus T_{CK_AHB}。

Example of sampling window

As shown in ***Figure 10-8. Input filtering clock cycle***, the input filtering configuration is as follows:

- IFTP0[1:0]=10 in GPIOx_IFTP register, which means there are 6 sampling points;
- FLPRD0=1 in GPIOx_IFL register, sampling period

  $T_{SP}=2\times FLPRD0\times T_{CK_AHB}=2\times T_{CK_AHB}$;

The configuration results are as follows:

- The sampling width is: $T_{SW}=6\times T_{SP}=6\times 2\times FLPRD0\times T_{CK_AHB}=6\times 2\times T_{CK_AHB}$;
- If T_{CK_AHB}=10ns, the duration of the sampling window is:
  $T_{SP}=2\times T_{CK_AHB}=2\times 10ns=20ns$
  $T_{SW}=6\times 2\times T_{CK_AHB}=6\times 20ns=120ns$
- To illustrate the asynchronous nature of the input relative to the sampling period and the system clock, an additional sampling period and CK_AHB cycle may be required to detect the change of input signal.
  $T_{SW}+T_{CK_AHB}=120+10=130ns$
- In ***Figure 10-8. Input filtering clock cycle***, the interference (A) is shorter than the total sampling window, so it will be filtered.

Figure 10-8. Input filtering clock cycle

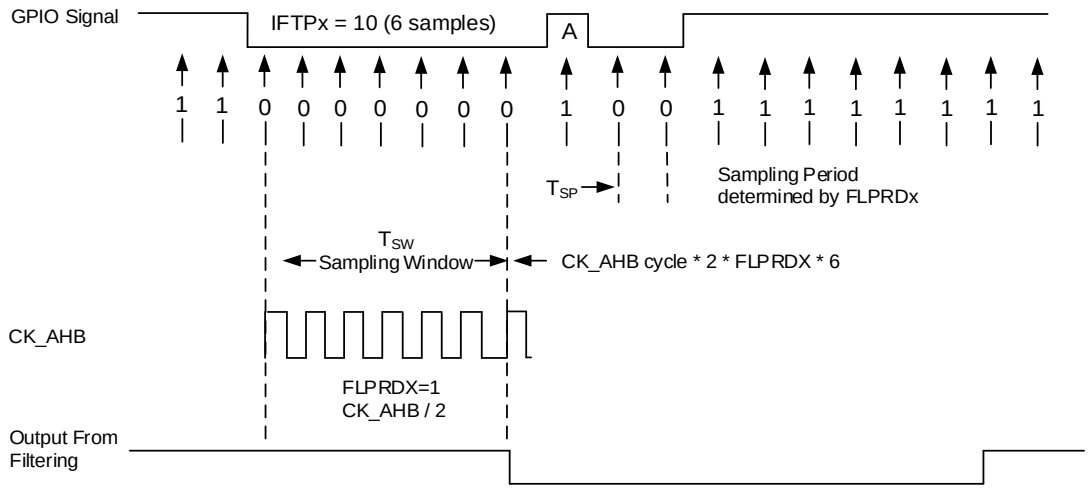

10.4. Register definition

GPIOA base address: 0x5802 0000

GPIOB base address: 0x5802 0400

GPIOC base address: 0x5802 0800

GPIOD base address: 0x5802 0C00

GPIOE base address: 0x5802 1000

GPIOF base address: 0x5802 1400

GPIOG base address: 0x5802 1800

GPIOH base address: 0x5802 1C00

GPIOJ base address: 0x5802 2400

GPIOK base address: 0x5802 2800

10.4.1. Port control register (GPIOx_CTL, x=A...H, J, K)

Address offset: 0x00
Reset value: 0xABFF FFFF for port A; 0xFFFF FE8F for port B; 0xFFFF FFFF for others.

This register can be accessed by byte (8-bit), half-word (16-bit) and word (32-bit).

31 30	29 28	27 26	25 24	23 22	21 20	19 18	17 16
CTL15[1:0]	CTL14[1:0]	CTL13[1:0]	CTL12[1:0]	CTL11[1:0]	CTL10[1:0]	CTL9[1:0]	CTL8[1:0]
rw	rw	rw	rw	rw	rw	rw	rw

15 14	13 12	11 10	9 8	7 6	5 4	3 2	1 0
CTL7[1:0]	CTL6[1:0]	CTL5[1:0]	CTL4[1:0]	CTL3[1:0]	CTL2[1:0]	CTL1[1:0]	CTL0[1:0]
rw	rw	rw	rw	rw	rw	rw	rw

Bits	Fields	Descriptions
31:30	CTL15[1:0]	Pin 15 configuration bits These bits are set and cleared by software. Refer to CTL0[1:0] description
29:28	CTL14[1:0]	Pin 14 configuration bits These bits are set and cleared by software. Refer to CTL0[1:0] description
27:26	CTL13[1:0]	Pin 13 configuration bits These bits are set and cleared by software. Refer to CTL0[1:0] description
25:24	CTL12[1:0]	Pin 12 configuration bits

		These bits are set and cleared by software. Refer to CTL0[1:0] description
23:22	CTL11[1:0]	Pin 11 configuration bits These bits are set and cleared by software. Refer to CTL0[1:0] description
21:20	CTL10[1:0]	Pin 10 configuration bits These bits are set and cleared by software. Refer to CTL0[1:0] description
19:18	CTL9[1:0]	Pin 9 configuration bits These bits are set and cleared by software. Refer to CTL0[1:0] description
17:16	CTL8[1:0]	Pin 8 configuration bits These bits are set and cleared by software. Refer to CTL0[1:0] description
15:14	CTL7[1:0]	Pin 7 configuration bits These bits are set and cleared by software. Refer to CTL0[1:0] description
13:12	CTL6[1:0]	Pin 6 configuration bits These bits are set and cleared by software. Refer to CTL0[1:0] description
11:10	CTL5[1:0]	Pin 5 configuration bits These bits are set and cleared by software. Refer to CTL0[1:0] description
9:8	CTL4[1:0]	Pin 4 configuration bits These bits are set and cleared by software. Refer to CTL0[1:0] description
7:6	CTL3[1:0]	Pin 3 configuration bits These bits are set and cleared by software. Refer to CTL0[1:0] description
5:4	CTL2[1:0]	Pin 2 configuration bits These bits are set and cleared by software. Refer to CTL0[1:0] description
3:2	CTL1[1:0]	Pin 1 configuration bits These bits are set and cleared by software. Refer to CTL0[1:0] description
1:0	CTL0[1:0]	Pin 0 configuration bits These bits are set and cleared by software. 00: Input mode

01: GPIO output mode

10: Alternate function mode

11: Analog mode(reset value)

Note: PB2 is used for BOOT1, so the default mode is Input Floating mode.

10.4.2. Port output mode register (GPIOx_OMODE, x=A…H, J, K)

Address offset: 0x04

Reset value: 0x0000 0000

This register can be accessed by byte (8-bit), half-word (16-bit) and word (32-bit).

31	30	29	28	27	26	25	24	23	22	21	20	19	18	17	16
Reserved															

15	14	13	12	11	10	9	8	7	6	5	4	3	2	1	0
OM15	OM14	OM13	OM12	OM11	OM10	OM9	OM8	OM7	OM6	OM5	OM4	OM3	OM2	OM1	OM0
rw	rw	rw	rw	rw	rw	rw	rw	rw	rw	rw	rw	rw	rw	rw	rw

Bits	Fields	Descriptions
31:16	Reserved	Must be kept at reset value
15	OM15	Pin 15 output mode bit These bits are set and cleared by software. Refer to OM0 description
14	OM14	Pin 14 output mode bit These bits are set and cleared by software. Refer to OM0 description
13	OM13	Pin 13 output mode bit These bits are set and cleared by software. Refer to OM0 description
12	OM12	Pin 12 output mode bit These bits are set and cleared by software. Refer to OM0 description
11	OM11	Pin 11 output mode bit These bits are set and cleared by software. Refer to OM0 description
10	OM10	Pin 10 output mode bit These bits are set and cleared by software. Refer to OM0 description
9	OM9	Pin 9 output mode bit These bits are set and cleared by software.

		Refer to OM0 description
8	OM8	Pin 8 output mode bit These bits are set and cleared by software. Refer to OM0 description
7	OM7	Pin 7 output mode bit These bits are set and cleared by software. Refer to OM0 description
6	OM6	Pin 6 output mode bit These bits are set and cleared by software. Refer to OM0 description
5	OM5	Pin 5 output mode bit These bits are set and cleared by software. Refer to OM0 description
4	OM4	Pin 4 output mode bit These bits are set and cleared by software. Refer to OM0 description
3	OM3	Pin 3 output mode bit These bits are set and cleared by software. Refer to OM0 description
2	OM2	Pin 2 output mode bit These bits are set and cleared by software. Refer to OM0 description
1	OM1	Pin 1 output mode bit These bits are set and cleared by software. Refer to OM0 description
0	OM0	Pin 0 output mode bit These bits are set and cleared by software. 0: Output push-pull mode (reset value) 1: Output open-drain mode

10.4.3. Port output speed register (GPIOx_OSPD, x=A...H, J, K)

Address offset: 0x08

Reset value: 0x0C00 0000 for port A; 0x0000 00C0 for port B; 0x0000 0000 for others.

This register can be accessed by byte (8-bit), half-word (16-bit) and word (32-bit).

31 30	29 28	27 26	25 24	23 22	21 20	19 18	17 16
OSPD15[1:0]	OSPD14[1:0]	OSPD13[1:0]	OSPD12[1:0]	OSPD11[1:0]	OSPD10[1:0]	OSPD9[1:0]	OSPD8[1:0]
rw	rw	rw	rw	rw	rw	rw	rw

15	14	13	12	11	10	9	8	7	6	5	4	3	2	1	0
OSPD7[1:0]		OSPD6[1:0]		OSPD5[1:0]		OSPD4[1:0]		OSPD3[1:0]		OSPD2[1:0]		OSPD1[1:0]		OSPD0[1:0]	
rw		rw		rw		rw		rw		rw		rw		rw	

Bits	Fields	Descriptions
31:30	OSPD15[1:0]	Pin 15 output max speed bits These bits are set and cleared by software. Refer to OSPD0[1:0] description
29:28	OSPD14[1:0]	Pin 14 output max speed bits These bits are set and cleared by software. Refer to OSPD0[1:0] description
27:26	OSPD13[1:0]	Pin 13 output max speed bits These bits are set and cleared by software. Refer to OSPD0[1:0] description
25:24	OSPD12[1:0]	Pin 12 output max speed bits These bits are set and cleared by software. Refer to OSPD0[1:0] description
23:22	OSPD11[1:0]	Pin 11 output max speed bits These bits are set and cleared by software. Refer to OSPD0[1:0] description
21:20	OSPD10[1:0]	Pin 10 output max speed bits These bits are set and cleared by software. Refer to OSPD0[1:0] description
19:18	OSPD9[1:0]	Pin 9 output max speed bits These bits are set and cleared by software. Refer to OSPD0[1:0] description
17:16	OSPD8[1:0]	Pin 8 output max speed bits These bits are set and cleared by software. Refer to OSPD0[1:0] description
15:14	OSPD7[1:0]	Pin 7 output max speed bits These bits are set and cleared by software. Refer to OSPD0[1:0] description
13:12	OSPD6[1:0]	Pin 6 output max speed bits These bits are set and cleared by software. Refer to OSPD0[1:0] description
11:10	OSPD5[1:0]	Pin 5 output max speed bits These bits are set and cleared by software. Refer to OSPD0[1:0] description

9:8	OSPD4[1:0]	Pin 4 output max speed bits These bits are set and cleared by software. Refer to OSPD0[1:0] description
7:6	OSPD3[1:0]	Pin 3 output max speed bits These bits are set and cleared by software. Refer to OSPD0[1:0] description
5:4	OSPD2[1:0]	Pin 2 output max speed bits These bits are set and cleared by software. Refer to OSPD0[1:0] description
3:2	OSPD1[1:0]	Pin 1 output max speed bits These bits are set and cleared by software. Refer to OSPD0[1:0] description
1:0	OSPD0[1:0]	Pin 0 output max speed bits These bits are set and cleared by software. 00: Output max speed 12M (reset value) 01: Output max speed 60M 10: Output max speed 85M 11: Output max speed 100/220M

10.4.4. Port pull-up/down register (GPIOx_PUD, x=A…H, J, K)

Address offset: 0x0C

Reset value: 0x6400 0000 for port A; 0x0000 0100 for port B; 0x0000 0000 for others.

This register can be accessed by byte (8-bit), half-word (16-bit) and word (32-bit).

31 30	29 28	27 26	25 24	23 22	21 20	19 18	17 16
PUD15[1:0]	PUD14[1:0]	PUD13[1:0]	PUD12[1:0]	PUD11[1:0]	PUD10[1:0]	PUD9[1:0]	PUD8[1:0]
rw	rw	rw	rw	rw	rw	rw	rw

15 14	13 12	11 10	9 8	7 6	5 4	3 2	1 0
PUD7[1:0]	PUD6[1:0]	PUD5[1:0]	PUD4[1:0]	PUD3[1:0]	PUD2[1:0]	PUD1[1:0]	PUD0[1:0]
rw	rw	rw	rw	rw	rw	rw	rw

Bits	Fields	Descriptions
31:30	PUD15[1:0]	Pin 15 pull-up or pull-down bits These bits are set and cleared by software. Refer to PUD0[1:0] description
29:28	PUD14[1:0]	Pin 14 pull-up or pull-down bits These bits are set and cleared by software. Refer to PUD0[1:0] description
27:26	PUD13[1:0]	Pin 13 pull-up or pull-down bits These bits are set and cleared by software.

		Refer to PUD0[1:0] description
25:24	PUD12[1:0]	Pin 12 pull-up or pull-down bits These bits are set and cleared by software. Refer to PUD0[1:0] description
23:22	PUD11[1:0]	Pin 11 pull-up or pull-down bits These bits are set and cleared by software. Refer to PUD0[1:0] description
21:20	PUD10[1:0]	Pin 10 pull-up or pull-down bits These bits are set and cleared by software. Refer to PUD0[1:0] description
19:18	PUD9[1:0]	Pin 9 pull-up or pull-down bits These bits are set and cleared by software. Refer to PUD0[1:0] description
17:16	PUD8[1:0]	Pin 8 pull-up or pull-down bits These bits are set and cleared by software. Refer to PUD0[1:0] description
15:14	PUD7[1:0]	Pin 7 pull-up or pull-down bits These bits are set and cleared by software. Refer to PUD0[1:0] description
13:12	PUD6[1:0]	Pin 6 pull-up or pull-down bits These bits are set and cleared by software. Refer to PUD0[1:0] description
11:10	PUD5[1:0]	Pin 5 pull-up or pull-down bits These bits are set and cleared by software. Refer to PUD0[1:0] description
9:8	PUD4[1:0]	Pin 4 pull-up or pull-down bits These bits are set and cleared by software. Refer to PUD0[1:0] description
7:6	PUD3[1:0]	Pin 3 pull-up or pull-down bits These bits are set and cleared by software. Refer to PUD0[1:0] description
5:4	PUD2[1:0]	Pin 2 pull-up or pull-down bits These bits are set and cleared by software. Refer to PUD0[1:0] description
3:2	PUD1[1:0]	Pin 1 pull-up or pull-down bits These bits are set and cleared by software. Refer to PUD0[1:0] description

1:0	PUD0[1:0]	Pin 0 pull-up or pull-down bits These bits are set and cleared by software. 00: Floating mode, no pull-up and pull-down (reset value) 01: With pull-up mode 10: With pull-down mode 11: Reserved

10.4.5. Port input status register (GPIOx_ISTAT, x=A…H, J, K)

Address offset: 0x10

Reset value: 0x0000 XXXX

This register can be accessed by byte (8-bit), half-word (16-bit) and word (32-bit).

31	30	29	28	27	26	25	24	23	22	21	20	19	18	17	16
Reserved															

15	14	13	12	11	10	9	8	7	6	5	4	3	2	1	0
ISTAT15	ISTAT14	ISTAT13	ISTAT12	ISTAT11	ISTAT10	ISTAT9	ISTAT8	ISTAT7	ISTAT6	ISTAT5	ISTAT4	ISTAT3	ISTAT2	ISTAT1	ISTAT0
r	r	r	r	r	r	r	r	r	r	r	r	r	r	r	r

Bits	Fields	Descriptions
31:16	Reserved	Must be kept at reset value
15:0	ISTATy	Port input status (y=0..15) These bits are set and cleared by hardware. 0: Input signal low 1: Input signal high

10.4.6. Port output control register (GPIOx_OCTL, x=A…H, J, K)

Address offset: 0x14

Reset value: 0x0000 0000

This register can be accessed by byte (8-bit), half-word (16-bit) and word (32-bit).

31	30	29	28	27	26	25	24	23	22	21	20	19	18	17	16
Reserved															

15	14	13	12	11	10	9	8	7	6	5	4	3	2	1	0
OCTL15	OCTL14	OCTL13	OCTL12	OCTL11	OCTL10	OCTL9	OCTL8	OCTL7	OCTL6	OCTL5	OCTL4	OCTL3	OCTL2	OCTL1	OCTL0
rw	rw	rw	rw	rw	rw	rw	rw	rw	rw	rw	rw	rw	rw	rw	rw

Bits	Fields	Descriptions
31:16	Reserved	Must be kept at reset value
15:0	OCTLy	Port output control (y=0..15)

These bits are set and cleared by software.

0: Pin output low

1: Pin output high

10.4.7. Port bit operate register (GPIOx_BOP, x=A...H, J, K)

Address offset: 0x18

Reset value: 0x0000 0000

This register can be accessed by byte (8-bit), half-word (16-bit) and word (32-bit).

31	30	29	28	27	26	25	24	23	22	21	20	19	18	17	16
CR15	CR14	CR13	CR12	CR11	CR10	CR9	CR8	CR7	CR6	CR5	CR4	CR3	CR2	CR1	CR0
w	w	w	w	w	w	w	w	w	w	w	w	w	w	w	w
15	14	13	12	11	10	9	8	7	6	5	4	3	2	1	0
BOP15	BOP14	BOP13	BOP12	BOP11	BOP10	BOP9	BOP8	BOP7	BOP6	BOP5	BOP4	BOP3	BOP2	BOP1	BOP0
w	w	w	w	w	w	w	w	w	w	w	w	w	w	w	w

Bits	Fields	Descriptions
31:16	Cry	Port clear bit y(y=0..15) These bits are set and cleared by software. 0: No action on the corresponding OCTLy bit 1: Clear the corresponding OCTLy bit
15:0	BOPy	Port set bit y(y=0..15) These bits are set and cleared by software. 0: No action on the corresponding OCTLy bit 1: Set the corresponding OCTLy bit

10.4.8. Port configuration lock register (GPIOx_LOCK, x=A...H, J, K)

Address offset: 0x1C

Reset value: 0x0000 0000

This register has to be accessed by word (32-bit).

31	30	29	28	27	26	25	24	23	22	21	20	19	18	17	16
Reserved															LKK
															rw
15	14	13	12	11	10	9	8	7	6	5	4	3	2	1	0
LK15	LK14	LK13	LK12	LK11	LK10	LK9	LK8	LK7	LK6	LK5	LK4	LK3	LK2	LK1	LK0
rw	rw	rw	rw	rw	rw	rw	rw	rw	rw	rw	rw	rw	rw	rw	rw

Bits	Fields	Descriptions
31:17	Reserved	Must be kept at reset value
16	LKK	Lock key

		It can only be set by using the lock key writing sequence. And is always readable. 0: GPIOx_LOCK register and the port configuration are not locked 1: GPIOx_LOCK register is locked until an MCU reset LOCK key writing sequence: Write 1→Write 0→Write 1→ Read 0→ Read 1 **Note:** The value of LKy(y=0..15) must be held during the LOCK Key writing sequence.
15:0	LKy	Port lock bit y(y=0..15) These bits are set and cleared by software. 0: Port configuration not locked 1: Port configuration locked

10.4.9. Alternate function selected register 0 (GPIOx_AFSEL0, x=A...H, J, K)

Address offset: 0x20

Reset value: 0x0000 0000

This register can be accessed by byte (8-bit), half-word (16-bit) and word (32-bit).

31	30	29	28	27	26	25	24	23	22	21	20	19	18	17	16
SEL7[3:0]				SEL6[3:0]				SEL5[3:0]				SEL4[3:0]			
rw				rw				rw				rw			

15	14	13	12	11	10	9	8	7	6	5	4	3	2	1	0
SEL3[3:0]				SEL2[3:0]				SEL1[3:0]				SEL0[3:0]			
rw				rw				rw				rw			

Bits	Fields	Descriptions
31:28	SEL7[3:0]	Pin 7 alternate function selected These bits are set and cleared by software. Refer to SEL0[3:0] description
27:24	SEL6[3:0]	Pin 6 alternate function selected These bits are set and cleared by software. Refer to SEL0[3:0] description
23:20	SEL5[3:0]	Pin 5 alternate function selected These bits are set and cleared by software. Refer to SEL0[3:0] description
19:16	SEL4[3:0]	Pin 4 alternate function selected These bits are set and cleared by software. Refer to SEL0[3:0] description
15:12	SEL3[3:0]	Pin 3 alternate function selected These bits are set and cleared by software. Refer to SEL0[3:0] description

11:8	SEL2[3:0]	Pin 2 alternate function selected These bits are set and cleared by software. Refer to SEL0[3:0] description
7:4	SEL1[3:0]	Pin 1 alternate function selected These bits are set and cleared by software. Refer to SEL0[3:0] description
3:0	SEL0[3:0]	Pin 0 alternate function selected These bits are set and cleared by software. 0000: AF0 selected (reset value) 0001: AF1 selected 0010: AF2 selected 0011: AF3 selected 0100: AF4 selected 0101: AF5 selected 0110: AF6 selected 0111: AF7 selected 1000: AF8 selected 1001: AF9 selected 1010: AF10 selected 1011: AF11 selected 1100: AF12 selected 1101: AF13 selected 1110: AF14 selected 1111: AF15 selected

10.4.10. Alternate function selected register 1 (GPIOx_AFSEL1, x=A…H, J, K)

Address offset: 0x24

Reset value: 0x0000 0000

This register can be accessed by byte (8-bit), half-word (16-bit) and word (32-bit).

31	30	29	28	27	26	25	24	23	22	21	20	19	18	17	16
SEL15[3:0]				SEL14[3:0]				SEL13[3:0]				SEL12[3:0]			
rw				rw				rw				rw			

15	14	13	12	11	10	9	8	7	6	5	4	3	2	1	0
SEL11[3:0]				SEL10[3:0]				SEL9[3:0]				SEL8[3:0]			
rw				rw				rw				rw			

Bits	Fields	Descriptions
31:28	SEL15[3:0]	Pin 15 alternate function selected These bits are set and cleared by software. Refer to SEL8[3:0] description

27:24	SEL14[3:0]	Pin 14 alternate function selected These bits are set and cleared by software. Refer to SEL8[3:0] description
23:20	SEL13[3:0]	Pin 13 alternate function selected These bits are set and cleared by software. Refer to SEL8[3:0] description
19:16	SEL12[3:0]	Pin 12 alternate function selected These bits are set and cleared by software. Refer to SEL8[3:0] description
15:12	SEL11[3:0]	Pin 1 alternate function selected These bits are set and cleared by software. Refer to SEL8[3:0] description
11:8	SEL10[3:0]	Pin 10 alternate function selected These bits are set and cleared by software. Refer to SEL8[3:0] description
7:4	SEL9[3:0]	Pin 9 alternate function selected These bits are set and cleared by software. Refer to SEL8[3:0] description
3:0	SEL8[3:0]	Pin 8 alternate function selected These bits are set and cleared by software. 0000: AF0 selected (reset value) 0001: AF1 selected 0010: AF2 selected 0011: AF3 selected 0100: AF4 selected 0101: AF5 selected 0110: AF6 selected 0111: AF7 selected 1000: AF8 selected 1001: AF9 selected 1010: AF10 selected 1011: AF11 selected 1100: AF12 selected 1101: AF13 selected 1110: AF14 selected 1111: AF15 selected

10.4.11. Bit clear register (GPIOx_BC, x=A…H, J, K)

Address offset: 0x28

Reset value: 0x0000 0000

This register can be accessed by byte (8-bit), half-word (16-bit) and word (32-bit).

31	30	29	28	27	26	25	24	23	22	21	20	19	18	17	16
Reserved															

15	14	13	12	11	10	9	8	7	6	5	4	3	2	1	0
CR15	CR14	CR13	CR12	CR11	CR10	CR9	CR8	CR7	CR6	CR5	CR4	CR3	CR2	CR1	CR0
w	w	w	w	w	w	w	w	w	w	w	w	w	w	w	w

Bits	Fields	Descriptions
31:16	Reserved	Must be kept at reset value.
15:0	CRy	Port clear bit y(y=0..15) These bits are set and cleared by software. 0: No action on the corresponding OCTLy bit 1: Clear the corresponding OCTLy bit

10.4.12. Port bit toggle register (GPIOx_TG, x=A…H, J, K)

Address offset: 0x2C

Reset value: 0x0000 0000

This register can be accessed by byte (8-bit), half-word (16-bit) and word (32-bit).

31	30	29	28	27	26	25	24	23	22	21	20	19	18	17	16
Reserved															

15	14	13	12	11	10	9	8	7	6	5	4	3	2	1	0
TG15	TG14	TG13	TG12	TG11	TG10	TG9	TG8	TG7	TG6	TG5	TG4	TG3	TG2	TG1	TG0
w	w	w	w	w	w	w	w	w	w	w	w	w	w	w	w

Bits	Fields	Descriptions
31:16	Reserved	Must be kept at reset value
15:0	TGy	Port toggle bit y(y=0..15) These bits are set and cleared by software. 0: No action on the corresponding OCTLy bit 1: Toggle the corresponding OCTLy bit

10.4.13. Input filtering register (GPIOx_IFL, x=A...H, J, K)

Address offset: 0x30

Reset value: 0x0000 0000

This register can be accessed by byte (8-bit), half-word (16-bit) and word (32-bit).

31	30	29	28	27	26	25	24	23	22	21	20	19	18	17	16

Reserved

15	14	13	12	11	10	9	8	7	6	5	4	3	2	1	0
FLPRD1								FLPRD0							
rw								rw							

Bits	Fields	Descriptions
31:16	Reserved	Must be kept at reset value
15:8	FLPRD1	Filter sampling frequency for GPIO8 to GPIO15: 00: FLPRDx = CK_AHB 01: FLPRDx = CK_AHB / 2 02: FLPRDx = CK_AHB / 4 .... FF: FLPRDx = CK_AHB / 510
7:0	FLPRD0	Filter sampling frequency for GPIO1 to GPIO7: 00: FLPRDx = CK_AHB 01: FLPRDx = CK_AHB / 2 02: FLPRDx = CK_AHB / 4 .... FF: FLPRDx = CK_AHB / 510

10.4.14. Input filtering type register (GPIOx_IFTP, x=A...H, J, K)

Address offset: 0x34

Reset value: 0xFFFF FFFF

This register can be accessed by byte (8-bit), half-word (16-bit) and word (32-bit).

31	30	29	28	27	26	25	24	23	22	21	20	19	18	17	16
IFTP15[1:0]		IFTP14[1:0]		IFTP13[1:0]		IFTP12[1:0]		IFTP11[1:0]		IFTP10[1:0]		IFTP9[1:0]		IFTP8[1:0]	
rw		rw		rw		rw		rw		rw		rw		rw	

15	14	13	12	11	10	9	8	7	6	5	4	3	2	1	0
IFTP7[1:0]		IFTP6[1:0]		IFTP5[1:0]		IFTP4[1:0]		IFTP3[1:0]		IFTP2[1:0]		IFTP1[1:0]		IFTP0[1:0]	
rw		rw		rw		rw		rw		rw		rw		rw	

Bits	Fields	Descriptions
31:30	IFTP15[1:0]	Pin 15 input filtering type bits These bits are set and cleared by software. Refer to IFTP0[1:0] description
29:28	IFTP14[1:0]	Pin 14 input filtering type bits These bits are set and cleared by software. Refer to IFTP0[1:0] description
27:26	IFTP13[1:0]	Pin 13 input filtering type bits

		These bits are set and cleared by software. Refer to IFTP0[1:0] description
25:24	IFTP12[1:0]	Pin 12 input filtering type bits These bits are set and cleared by software. Refer to IFTP0[1:0] description
23:22	IFTP11[1:0]	Pin 11 input filtering type bits These bits are set and cleared by software. Refer to IFTP0[1:0] description
21:20	IFTP10[1:0]	Pin 10 input filtering type bits These bits are set and cleared by software. Refer to IFTP0[1:0] description
19:18	IFTP9[1:0]	Pin 9 input filtering type bits These bits are set and cleared by software. Refer to IFTP0[1:0] description
17:16	IFTP8[1:0]	Pin 8 input filtering type bits These bits are set and cleared by software. Refer to IFTP0[1:0] description
15:14	IFTP7[1:0]	Pin 7 input filtering type bits These bits are set and cleared by software. Refer to IFTP0[1:0] description
13:12	IFTP6[1:0]	Pin 6 input filtering type bits These bits are set and cleared by software. Refer to IFTP0[1:0] description
11:10	IFTP5[1:0]	Pin 5 input filtering type bits These bits are set and cleared by software. Refer to IFTP0[1:0] description
9:8	IFTP4[1:0]	Pin 4 input filtering type bits These bits are set and cleared by software. Refer to IFTP0[1:0] description
7:6	IFTP3[1:0]	Pin 3 input filtering type bits These bits are set and cleared by software. Refer to IFTP0[1:0] description
5:4	IFTP2[1:0]	Pin 2 input filtering type bits These bits are set and cleared by software. Refer to IFTP0[1:0] description
3:2	IFTP1[1:0]	Pin 1 input filtering type bits These bits are set and cleared by software.

		Refer to IFTP0[1:0] description
1:0	IFTP0[1:0]	Pin 0 input filtering type bits These bits are set and cleared by software. 00: Synchronization 01: Filtering (3 samples) 10: Filtering (6 samples) 11: Asynchronous (no synchronization or filtering)

11. Cyclic redundancy checks management unit (CRC)

11.1. Overview

A cyclic redundancy check (CRC) is an error-detecting code commonly used in digital networks and storage devices to detect accidental changes to raw data.

This CRC management unit can be used to calculate 7/8/16/32 bit CRC code within user configurable polynomial.

11.2. Characteristics

- Supports 7/8/16/32 bit data input
- For 7(8)/16/32 bit input data length, the calculation cycles are 1/2/4 AHB clock cycles
- User configurable polynomial value and size
- After CRC module·reset, user can configure initial value
- Free 8-bit register is unrelated to calculation and can be used for any other goals by any other peripheral devices

Figure 11-1. Block diagram of CRC calculation unit

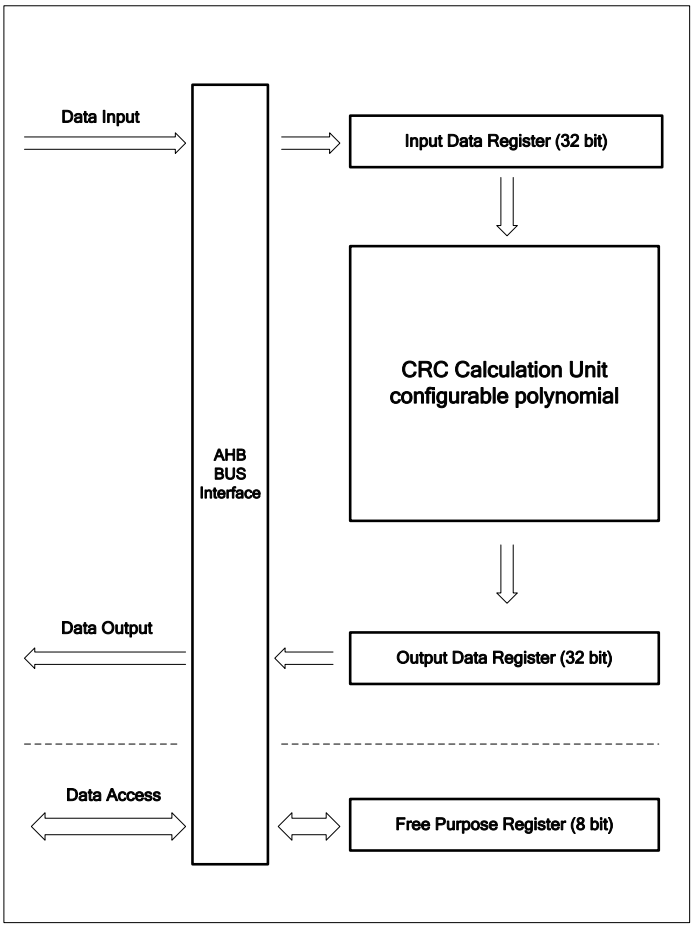

11.3. Function overview

- CRC calculation unit is used to calculate the 32-bit raw data, and CRC_DATA register will receive the raw data and store the calculation result.

  If the CRC_DATA register has not been cleared by setting the CRC_CTL register, the new input raw data will be calculated based on the result of previous value of CRC_DATA.

  CRC calculation will spend 4/2/1 AHB clock cycles for 32/16/8(7) bit data size. During this period, AHB will not be hanged because of the existence of the 32bit input buffer.

- This module supplies an 8-bit free register CRC_FDATA.

  CRC_FDATA is unrelated to the CRC calculation. Independent read and write operations can be performed at any time.

- Reversible function can reverse the input data and output data.

  For input data, 3 reverse types can be selected.

  Original data is 0x3456CDEF:

  1) byte reverse:
  32-bit data is divided into 4 groups and reverse implement in group inside. Reversed data: 0x2C6AB3F7

  2) half-word reverse:
  32-bit data is divided into 2 groups and reverse implement in group inside. Reversed data: 0x6A2CF7B3

  3) word reverse:
  32-bit data is divided into 1 groups and reverse implement in group inside. Reversed data: 0xF7B36A2C

  For output data, reverse type is word reverse.

  For example: when REV_O=1, calculation result 0x3344CCDD will be converted to 0xBB3322CC.

- User configurable initial calculation data is available.

  When RST bit is set or write operation to CRC_IDATA register, the CRC_DATA register will be automatically initialized to the value in CRC_IDATA.

- User configurable polynomial.

  Depends on PS[1:0] bits, the valid polynomial and output bit width can be selected by user. If the polynomial is less than 32 bit, the high bits of the input data and output data is unavailable. It is strongly recommend resetting the CRC calculation unit after change the PS[1:0] bits or polynomial.

11.4. Register definition

CRC base address: 0x4002 3000

11.4.1. Data register (CRC_DATA)

Address offset: 0x00

Reset value: 0xFFFF FFFF

This register has to be accessed by word (32-bit).

31	30	29	28	27	26	25	24	23	22	21	20	19	18	17	16
DATA[31:16]															
rw															

15	14	13	12	11	10	9	8	7	6	5	4	3	2	1	0
DATA[15:0]															
rw															

Bits	Fields	Descriptions
31:0	DATA[31:0]	CRC calculation result bits Software writes and reads. This register is used to calculate new data, and the register can be written the new data directly. Write value cannot be read because the read value is the previous CRC calculation result.

11.4.2. Free data register (CRC_FDATA)

Address offset: 0x04

Reset value: 0x0000 0000

This register has to be accessed by word (32-bit).

31	30	29	28	27	26	25	24	23	22	21	20	19	18	17	16
Reserved															

15	14	13	12	11	10	9	8	7	6	5	4	3	2	1	0
Reserved								FDATA[7:0]							
								rw							

Bits	Fields	Descriptions
31:8	Reserved	Must be kept at reset value.
7:0	FDATA[7:0]	Free data register bits Software writes and reads. These bits are unrelated with CRC calculation. This byte can be used for any goal

by any other peripheral. The CRC_CTL register will generate no effect to the byte.

11.4.3. Control register (CRC_CTL)

Address offset: 0x08

Reset value: 0x0000 0000

This register has to be accessed by word (32-bit).

31	30	29	28	27	26	25	24	23	22	21	20	19	18	17	16
Reserved															

15	14	13	12	11	10	9	8	7	6	5	4	3	2	1	0
Reserved								REV_O	REV_I[1:0]		PS[1:0]		Reserved		RST
								rw	rw		rw				rs

Bits	Fields	Descriptions
31:8	Reserved	Must be kept at reset value.
7	REV_O	Reverse output data value in bit order 0:Not bit reversed for output data 1:Bit reversed for output data
6:5	REV_I[1:0]	Reverse type for input data 0: Dot not use reverse for input data 1: Reverse input data with every 8-bit length 2: Reverse input data with every 16-bit length 3: Reverse input data with whole 32-bit length
4:3	PS[1:0]	Size of polynomial 0: 32 bit 1: 16 bit (POLY [15:0] is used for calculation.) 2: 8 bit (POLY [7:0] is used for calculation.) 3: 7 bit (POLY [6:0] is used for calculation.)
2:1	Reserved	Must be kept at reset value.
0	RST	Software writes and reads. Set this bit can reset the CRC_DATA register. When set, the value of the CRC_DATA register is automatically initialized to the value in the CRC_IDATA register and then automatically cleared by hardware. This bit will take no effect to CRC_FDATA.

11.4.4. Initialization data register (CRC_IDATA)

Address offset: 0x10

Reset value: 0xFFFF FFFF

This register has to be accessed by word (32-bit).

31	30	29	28	27	26	25	24	23	22	21	20	19	18	17	16
IDATA[31:16]															
rw															

15	14	13	12	11	10	9	8	7	6	5	4	3	2	1	0
IDATA[15:0]															
rw															

Bits	Fields	Descriptions
31:0	IDATA[31:0]	Configurable initial CRC data value When RST bit in CRC_CTL asserted, CRC_DATA will be programmed to this value.

11.4.5. Polynomial register (CRC_POLY)

Address offset: 0x14

Reset value: 0x04C1 1DB7

This register has to be accessed by word (32-bit).

31	30	29	28	27	26	25	24	23	22	21	20	19	18	17	16
POLY[31:16]															
rw															

15	14	13	12	11	10	9	8	7	6	5	4	3	2	1	0
POLY[15:0]															
rw															

Bits	Fields	Descriptions
31:0	POLY[31:0]	User configurable polynomial value This value is used together with PS[1:0] bits.

12. True random number generator (TRNG)

12.1. Overview

The true random number generator (TRNG) module can generate a 32-bit random value by using continuous analog noise and it has been pre-certified NIST SP800-90B.

12.2. Characteristics

- LFSR (Linear Feedback Shift Register) mode and NIST (National Institute of Standards and Technology) mode to generate random number.
- About 40 periods of TRNG_CLK are needed between two consecutive random numbers in LFSR mode.
- 32-bit random numbers are generated each time in LFSR mode.
- TRNG NIST mode follows the NIST SP800-90B.
- Support health tests recommended by the NIST SP800-90B.
- 32-bit*4 or 32-bit*8 random numbers are generated each time in NIST mode.
- TRNG has the functions of startup and in-service self-check, associated with specific error flags.
- Disable TRNG module will reduce the chip power consumption.
- 128-bit random value seed is generated from analog noise, so the random number is a true random number.

12.3. Function overview

Figure 12-1. TRNG block diagram

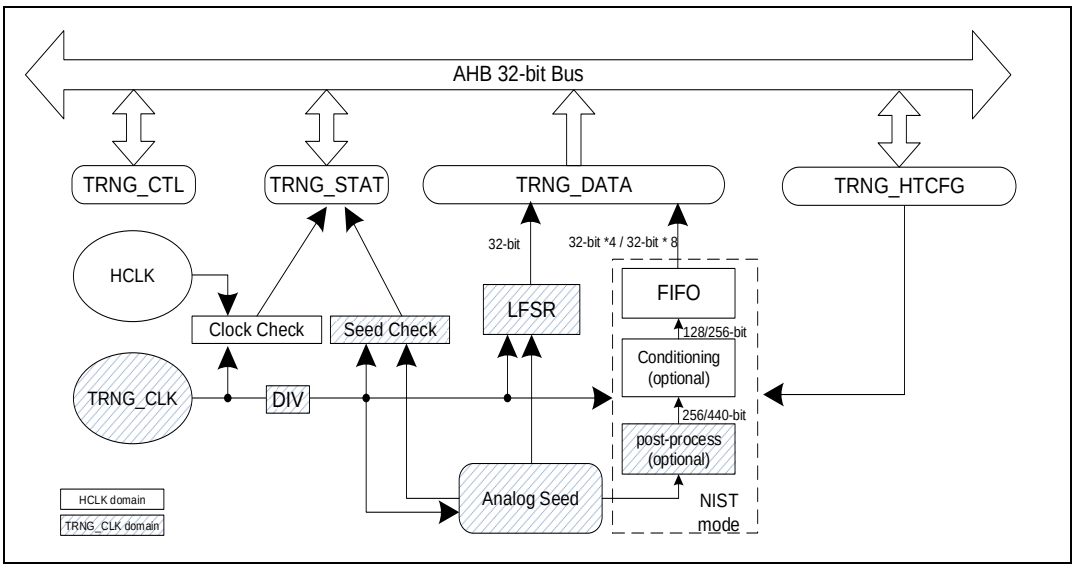

There are two modes in TRNG module, NIST mode and LFSR mode.

In the NIST mode, the analog seeds of random number come from 4 noise sources. The noise source signal is first operated by XOR and then digitized to obtain a 1-bit analog seed. This analog seed is then plugged into a conditioning logic (uint) to generate 128-bit or 256-bit data output. A HASH function complied with NIST SP800-90B is implemented in the conditioning stage to increase the entropy of random number. And the output data can be read out by reading the data register TRNG_DATA 4 or 8 times continuously after the data ready flag (DRDY) in TRNG_STAT register is set.

In the LFSR mode, the analog random number seed is plugged into a linear feedback shift register (LFSR), where a 32-bit width random number is generated. The 32-bit value of LFSR will transfer into TRNG_DATA register after a sufficient number of seeds have been sent to the LFSR.

The analog seed is generated by several ring oscillators. The seed generate model is driven by a configurable TRNG_CLK (refer to ***Reset and clock unit (RCU)*** chapter), so that the quality of the generated random number depends on TRNG_CLK exclusively, no matter what HCLK frequency was.

12.3.1. LFSR

A Linear Feedback Shift Register is a sequential shift register with combinational logic that causes it to pseudo-randomly cycle through a sequence of binary values. This operation will increase the entropy of the random number, and TRNG generates 32-bit data each time in this mode.

12.3.2. Post processing

When this function is enabled, half of the bits are taken from the sampled noise source, half of the bits are taken from inverted sampled noise source. And when the output data is ready, the post-process module will start a new random seed collection even if the random data haven't been read out. This operation will increase efficiency of TRNG module.

12.3.3. Conditioning

The conditioning component in the TRNG is a deterministic HASH function that increases the entropy rate of the resulting fixed-length bitstrings output. The NIST SP800-90B target is full entropy on the output.

The hash operation is controlled by ALGO[1:0] bits field and INIT bit in TRNG_CTL register. And the input random number bit width is controlled by register INMOD (256-bit or 440-bit), while the output bit width is controlled by OUTMOD (128-bit or 256-bit).

12.3.4. Output FIFO

The width of data output FIFO is 4 or 8 (controlled by OUTMOD) words(32-bit) in NIST mode,

and these data are stored in the output FIFO temporarily. When all words have been read from the output FIFO through the TRNG_DATA register, a new round of conditioning process is automatically started, then another 128-bit or 256-bit conditioning output data is pushed into the output FIFO and waiting for the next reading.

The DRDY bit in TRNG_STAT register will be set when a random number is available through the TRNG_DATA register. This bit remains set until output FIFO becomes empty after reading 4 or 8 times continuously from the TRNG_DATA register in NIST mode. This flag also remains setting until the one TRNG_DATA is read out when in LFSR mode.

In NIST mode, it will cost about input seed number(controlled by INMOD bit in the TRNG_CTL register) plus 10 TRNG_CLK periods and 70 HCLK periods. While in LFSR mode, generate a 32bit random number need about 40 TRNG_CLK periods.

The hash function with different ALGO setting in the TRNG_CTL register will produce results of different valid length. TRNG module will place the valid bits at high order of output FIFO, so the first read data is always valid data. And user should select the expect data and register setting according to the need. More details refer to ***Table 12-1. ALGO configurations***.

Table 12-1. ALGO configurations

ALGO	00	01	10	11
algorithm	SHA1	MD5	SHA224	SHA256
valid length	160	128	224	256

12.3.5. Health tests

This component ensures the stable operation of TRNG and can quickly monitor the occurrence of errors.

The health tests features of TRNG module following NIST SP800-90B. For more details about thresholds, refer to TRNG_HTCFG register.

1) Start-up health tests: These tests performed after reset and before using TRNG to get random numbers for the first time.

   - Adaptive proportion test: The TRNG verifies that the first bit on the outputs of the noise source is not repeated more than a threshold value, this threshold value refer to APT_TH bit fields in the TRNG_HTCFG register (default 691 times).
   - Repetition count test: If the noise source has provided more than a specified number of consecutive bits at a constant value(0 or 1), an error will occur and the relevant error flag will be set. This threshold value refer to RCT_TH bit fields in TRNG_HTCFG register(default 40).
   - Replace test: The TRNG can replace the input of condition stage with a specific number, and compare the output to the correct answer according to different algorithm during this stage.

2) Continuous health tests: These tests are run indefinitely on the outputs of the noise source while the noise source is operating.

- Adaptive proportion test: refer to the start-up health tests.
- Repetition count test: refer to the start-up health tests.

3) GD-Defined continuous health tests: Additional health tests specified by vendor.

- Transition count test: if the noise source provided more than 32 consecutive occurrence of two bits patterns(01 or 10), an error will occur and the relevant error flag will be set.
- Clock detector: if the TRNG clock cycle before divided is smaller than AHB clock cycle divided by 16, an error will occur and the relevant error flag will be set.

4) On-demand test of the noise source output

- The noise source output only support on-demand testing by restarting the entropy source and rerunning the startup tests.

Note:

- In NIST mode, ERR_STA bit in the TRNG_STAT register will be set when an error is detected, and if the interrupt bit of TRNG is asserted, an interrupt is generated.
- When the replace test is enabled, the random numbers generated are only used to verify the functionality of the conditioning component. After the test is completed, the random numbers should be discarded and should not be used as true random numbers.

12.3.6. NIST mode state

The states of NIST mode are shown below:

1. The initial state of the TRNG is idle state.
2. It goes to warm-up state after enabling the TRNG by setting RNGEN bit in the TRNG_CTL register. This state is a period for analog initialition.
3. After counting 16 cycles of TRNG_CLK (before divider), the state goes to start-up state, and the start-up health tests are implemented, which will cost 1024 divided TRNG_CLK cycles.
4. Then the state changes to gen-samp (generate sample) state to generate random number sample. The TRNG module will generate a new set of random number after the output FIFO is empty.

If an error occurs when the TRNG is in start-up state or gen-samp state, the ERR_STA bit in the TRNG_STAT register will be set.

Note :

- Don’t change the CLKDIV[3:0] bits field in TRNG_CTL register when in operation.
- When the TRNG is in start-up state, a random number is also generated for the first sample generate time reduce consideration, even if this sample is suggested to discard according to the FIPS PUB140-2.
- If RT_EN bit in the TRNG_CTL register is set, the first output number is a replace test result, and it should be discarded.

12.3.7. Operation flow

The following steps are recommended for using TRNG block:

1. Set CONDRST bit in TRNG_CTL register.
2. Write the required configuration in the TRNG_CTL register, such as module power consumption, clock frequency division factor, operating mode, input / output bit-width, algorithm, etc.
3. Enable the TRNGEN bit.
4. Clear the CONDRST bit for the written configuration to take effect.
5. Check the status register TRGN_STAT, if SEIF, CEIF, ERR_STA, SECS and CECS are all stay 0 and DRDY=1, then the random value in the data register could be read.

When the IE bit in the TRNG_CTL register is set, an interrupt is generated if:

- Successfully generated a random number, and the DRDY bit in the TRNG_STAT register is set.
- A seed error occurs, and the SEIF and ERR_STA bits in the TRNG_STAT register are set.
- A clock error occurs, and the CEIF and ERR_STA bits in the TRNG_STAT register are set.

As required by the FIPS PUB 140-2, the first random data in data register should be saved but not be used. Every subsequent new random data should be compared to the previously random data. The data can only be used if it is not equal to the previously one.

12.3.8. Error flags

(1) Clock error

When the TRNG_CLK frequency is lower than the 1/16 of HCLK, the CECS and CEIF bit will be set. In this case, the application should check TRNG_CLK and HCLK frequency configurations and then clear CEIF bit. Clock error will not impact the previous random data.

(2) Seed error

When the analog seed is not changed or always changing exceed the threshold, the SECS and SEIF bit will be set. In this case, the random data in data register should not be used. The application needs a TRNG software reset by writing CONDRST bit at 1 and then at 0, clear the SEIF bit after reset TRNG, then wait for SECS bit in the TRNG_STAT register to be cleared by TRNG.

12.3.9. Low power usage

If customers concern about power consumption, besides configure the CLKDIV a large number, they can also disable the TRNG module after setting the DRDY bit in TRNG_STAT register. TRNG module will remain at the last state, and the random data still can be read

through the register TRNG_DATA. If a new random number is required, enable TRNG to activate the random number generation again.

12.4. Register definition

TRNG base address: 0x4802 1800

12.4.1. Control register (TRNG_CTL)

Address offset: 0x00

Reset value: 0x0300 0410

This register has to be accessed by word (32-bit).

31	30	29	28	27	26	25	24	23	22	21	20	19	18	17	16
CTL_LK	CONDRST	Reserved				NR[1:0]		Reserved				CLKDIV[3:0]			
rs	rw					rw						rw			

15	14	13	12	11	10	9	8	7	6	5	4	3	2	1	0
INMOD	OUTMOD	ALGO[1:0]		Reserved	COND_EN	PP_EN	INIT	RT_EN	Reserved	CED	MOD_SEL	IE	TRNGEN	Reserved	
rw	rw	rw			rw	rw	rw	rw		rw	rw	rw	rw		

Bits	Fields	Descriptions
31	CTL_LK	TRNG_CTL register lock bit This bit can only be reset to 0 if TRNG is reset. 0: Write bits[29:4] are allowed 1: Lock bits[29:4] and write bits[29:4] are ignored
30	CONDRST	Reset conditioning logic Write 1 then write 0 to reset conditioning logic. It should be noted that TRNG_HTCFG register and bits[29:4] in the TRNG_CTL register can only be written when CONDRST is 1.
29:26	Reserved	Must be kept at reset value.
25:24	NR[1:0]	Analog trng power mode. Reset value:2'b 11 00: Ultra low; 01: Low 10: Medium 11: High
23:20	Reserved	Must be kept at reset value.
19:16	CLKDIV[3:0]	TRNG clock divider 0000: 2^0 TRNG clock cycle per internal TRNG clock 0001: 2^1 TRNG clock cycles per internal TRNG clock …… 1111: 2^{15} TRNG clock cycles per internal TRNG clock
15	INMOD	Select random seed number input to conditioning module

		0: 256 bits 1: 440 bits
14	OUTMOD	Select random data width output of conditioning module 0: 128-bit 1: 256-bit
13:12	ALGO[1:0]	conditioning module hash algorithm selection 00: SHA1 01: MD5 10: SHA224 11: SHA256
11	Reserved	Must be kept at reset value.
10	COND_EN	The enable bit of conditioning component 0: Disable conditioning component 1: Enable conditioning component
9	PP_EN	The enable bit of post_processing function 0: Disable post_processing function 1: Enable post_processing function
8	INIT	Initialize hash algorithm when conditioning enabled. 0: Deinitialize hash algorithm 1: Initialize hash algo algorithm
7	RT_EN	Replace test enable bit 0: Disable replace test 1: Enable replace test
6	Reserved	Must be kept at reset value.
5	CED	Clock error detection 0: Disable clock error detection 1: Enable clock error detection
4	MOD_SEL	LFSR or NIST mode selection 0: LFSR mode 1: NIST mode
3	IE	The enable bit of the TRNG interrupt. This bit controls the generation of an interrupt when DRDY, SEIF, CEIF or ERR_STA was set. 0: Disable TRNG interrupt 1: Enable TRNG interrupt
2	TRNGEN	The enabled bit of the TRNG. 0: Disable TRNG module (reduce power consuming) 1: Enable TRNG module

1:0	Reserved	Must be kept at reset value.

12.4.2. Status register (TRNG_STAT)

Address offset: 0x04

Reset value: 0x0000 0000

This register has to be accessed by word (32-bit).

31	30	29	28	27	26	25	24	23	22	21	20	19	18	17	16
Reserved															

15	14	13	12	11	10	9	8	7	6	5	4	3	2	1	0
Reserved									SEIF	CEIF	Reserved	ERR_STA	SECS	CECS	DRDY
									rc_w0	rc_w0		r	r	r	r

Bits	Fields	Descriptions
31:7	Reserved	Must be kept at reset value.
6	SEIF	Seed error interrupt flag This bit will be set if more than 64 consecutive same bit or more than 32 consecutive 01(or 10) changing are detected. 0: No fault detected 1: Seed error has been detected. The bit is cleared by writing 0.
5	CEIF	Clock error interrupt flag This bit will be set if TRNG_CLK frequency is lower than 1/16 HCLK frequency. 0: No fault detected 1: Clock error has been detected. The bit is cleared by writing 0.
4	Reserved	Must be kept at reset value.
3	ERR_STA	NIST mode error flag, this bit could be reset by CONDRST 0: No error occurs in NIST mode 1: Error occurs in NIST mode
2	SECS	Seed error current status 0: Seed error is not detected at current time. In case of SEIF=1 and SECS=0, it means seed error has been detected before but now is recovered. 1: Seed error is detected at current time if more than 64 consecutive same bits or more than 32 consecutive 01(or 10) changing are detected
1	CECS	Clock error current status 0: Clock error is not detected at current time. In case of CEIF=1 and CECS=0, it means clock error has been detected before but now is recovered. 1: Clock error is detected at current time. TRNG_CLK frequency is lower than 1/16 HCLK frequency.

0	DRDY	Random data ready status bit. This bit is cleared by reading the TRNG_DATA register and set when a new random number is generated. 0: The content of TRNG data register is not available. 1: The content of TRNG data register is available.

12.4.3. Data register (TRNG_DATA)

Address offset: 0x08
Reset value: 0x0000 0000

Application must make sure DRDY bit in the TRNG_STAT register is set before reading this register.

This register has to be accessed by word (32-bit).

31	30	29	28	27	26	25	24	23	22	21	20	19	18	17	16
TRNDATA[31:16]															
r															

15	14	13	12	11	10	9	8	7	6	5	4	3	2	1	0
TRNDATA[15:0]															
r															

Bits	Fields	Descriptions
31:0	TRNDATA[31:0]	32-bit random data

12.4.4. Health tests configure register (TRNG_HTCFG)

Address offset: 0x10
Reset value: 0x02B3 0028

Set CONDRST bit and clear CTL_LK bit in the TRNG_CTL before writing TRNG_HTCFG.

This register has to be accessed by word (32-bit).

31	30	29	28	27	26	25	24	23	22	21	20	19	18	17	16
Reserved						APT_TH[9:0]									
						rw									

15	14	13	12	11	10	9	8	7	6	5	4	3	2	1	0
Reserved									RCT_TH[6:0]						
									rw						

Bits	Fields	Descriptions
31:26	Reserved	Must be kept at reset value.
25:16	APT_TH[9:0]	Adaptive proportion test threshold. Default 691.
15:7	Reserved	Must be kept at reset value.

6:0	RCT_TH[6:0]	Repetition count test threshold. Default 40.

13. Cryptographic Acceleration Unit (CAU)

13.1. Overview

The cryptographic acceleration unit (CAU) is used to encipher and decipher data with DES, Triple-DES or AES (128, 192, or 256) algorithms. This module follows the following standards:

- The Data Encryption Standard (DES) and the Triple Data Encryption Algorithm (TDEA) are announced by Federal Information Processing Standards Publication (FIPS) 46-3, October 25, 1999. It follows the American National Standards Institute (ANSI) X9.52 standard.
- The Advanced Encryption Standard (AES) is announced by Federal Information Processing Standards Publication 197, November 26, 2001.

DES / TDES / AES algorithms with different key sizes are supported to perform data encryption and decryption in the CAU in multiple modes.

The CAU is a 32-bit peripheral, DMA transfer is supported and data can be accessed in the input and output FIFO.

13.2. Characteristics

- DES, TDES and AES encryption / decryption algorithms are supported.
- Multiple modes are supported respectively in DES, TDES and AES, including Electronic codebook (ECB), Cipher block chaining (CBC), Counter mode (CTR), Galois / counter mode (GCM), Galois message authentication code mode (GMAC), Counter with CBC-MAC (CCM), Cipher Feedback mode (CFB) and Output Feedback mode(OFB).
- DMA transfer for incoming and outgoing data is supported.

DES / TDES

- Supports the ECB and CBC chaining algorithms.
- Two 32-bit initialization vectors (IV) are used in CBC mode.
- 8*32-bit input and output FIFO.
- Multiple data types are supported, including No swapping, Half-word swapping Byte swapping and Bit swapping.
- Data are transferred by DMA, CPU during interrupts, or without both of them.

AES

- Supports the ECB, CBC, CTR, GCM, GMAC, CCM, CFB and OFB chaining algorithms.
- Supports 128-bit, 192-bit and 256-bit keys.
- Four 32-bit initialization vectors (IV) are used in CBC, CTR, GCM, GMAC, CCM, CFB and OFB modes.
- 8*32-bit input and output FIFO.

- Multiple data types are supported, including No swapping, Half-word swapping Byte swapping and Bit swapping.
- Data can be transferred by DMA, CPU during interrupts, or without both of them.
- Support to use initial key from EFUSE.

13.3. CAU data type and initialization vectors

13.3.1. Data type

The cryptographic acceleration unit receives data of 32 bits at a time, while they are processed in 64 / 128 bits for DES / AES algorithms. For each data block, according to the data type, the data could be bit / byte / half-word / no swapped before they are transferred into the cryptographic acceleration processor. The same swapping operation should be also performed on the processor output data before they are collected. Note the least-significant data always occupies the lowest address location no matter which data type is configured, because the system memory is little-endian.

Figure 13-1. DATAM No swapping and Half-word swapping and ***Figure 13-2. DATAM Byte swapping and Bit swapping*** illustrate the 128-bit AES block data swapping according to different data types. (For DES, the data block is two 32-bit words, please refer to the first two words data swapping in the figure).

Figure 13-1. DATAM No swapping and Half-word swapping

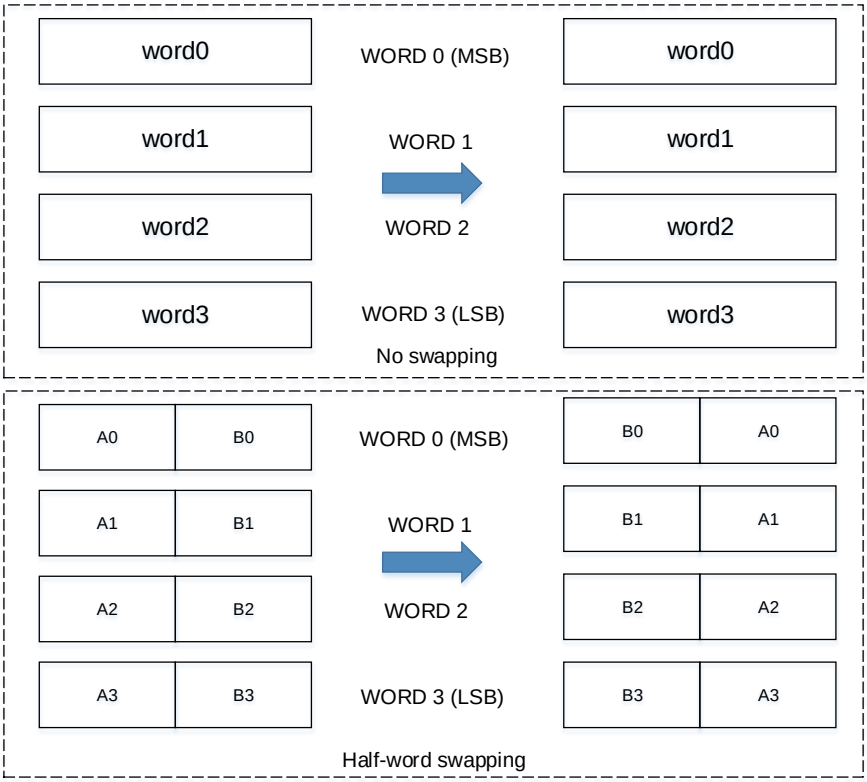

Figure 13-2. DATAM Byte swapping and Bit swapping

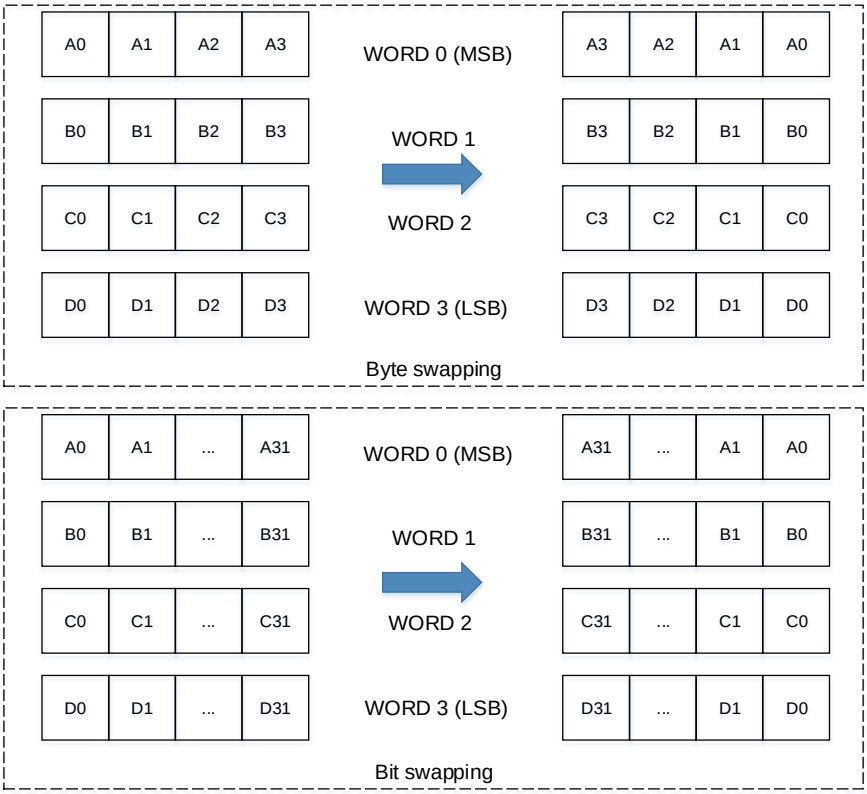

13.3.2. Initialization vectors

The initialization vectors are used in CBC, CTR, GCM, GMAC, CCM, CFB and OFB modes to XOR with data blocks. They are independent of plaintext and ciphertext, and the DATAM value will not affect them. Note the initialization vector registers CAU_IV0..1(H/L) can only be written when BUSY is 0, otherwise the write operations are invalid.

13.4. Cryptographic acceleration processor

The cryptographic acceleration unit implements DES and AES acceleration processors, which are detailed described in section ***DES / TDES cryptographic acceleration*** processor and ***AES cryptographic acceleration processor***.

Figure 13-3. CAU diagram shows the block diagram of the cryptographic acceleration unit.

Figure 13-3. CAU diagram

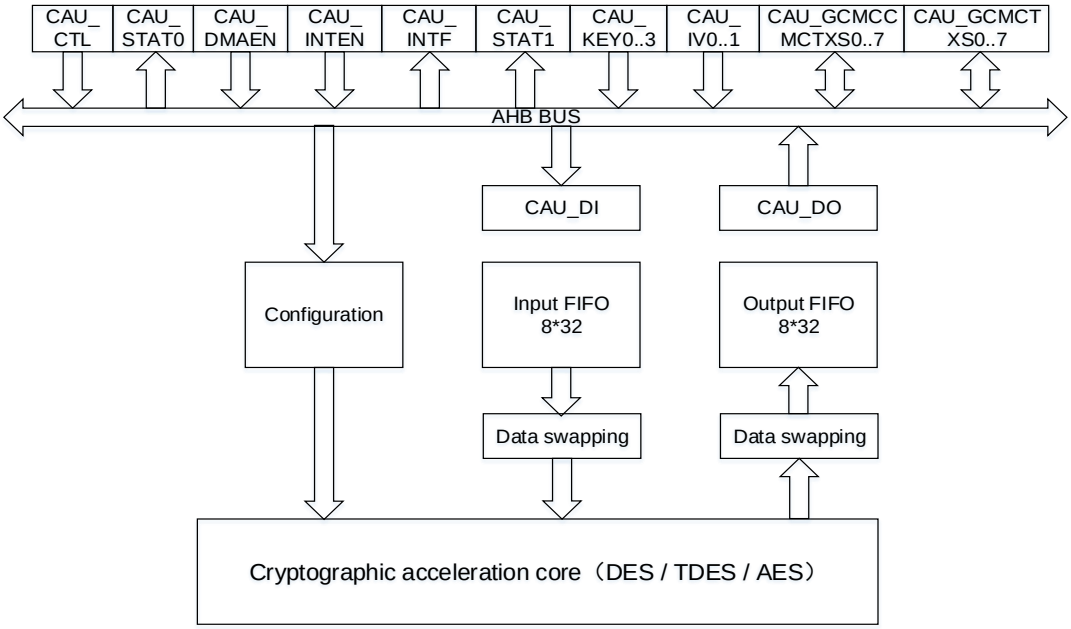

13.4.1. DES / TDES cryptographic acceleration processor

The DES/TDES cryptographic acceleration processor contains the DES algorithm (DEA), cryptographic keys (1 for DES algorithm and 3 for TDES algorithm), and initialization vectors in CBC mode.

DES / TDES key

[KEY1] is used in DES and [KEY3 KEY2 KEY1] are used in TDES respectively.
When TDES algorithm is configured, three different keying options are allowed:

1. Three same keys

The three keys KEY3, KEY2 and KEY1 are completely equal, which means KEY3=KEY2=KEY1. FIPS PUB 46-3 – 1999 (and ANSI X9.52 -1998) refers to this option. It is easy to understand that this mode is equivalent to DES.

2. Two different keys

In this option, KEY2 is different from KEY1, and KEY3 is equal to KEY1, which means, KEY1 and KEY2 are independent while KEY3= KEY1. FIPS PUB 46-3 – 1999 (and ANSI X9.52 – 1998) refers to this option.

3. Three different keys

In this option, KEY1, KEY2 and KEY3 are completely independent. FIPS PUB 46-3 -1999 (and ANSI X9.52 – 1998) refers to this option.

More information of the thorough explanation of the key used in the DES/TDES please refer to FIPS PUB 46-3 (and ANSI X9.52 -1998), and the explanation process is omitted in this manual.

DES / TDES ECB encryption

The 64-bit input plaintext is first obtained after data swapping according to the data type. When the TDES algorithm is configured, the input data block is read in the DEA and encrypted using KEY1. The output is fed back directly to next DEA and then decrypted using KEY2. After that, the output is fed back directly to the last DEA and encrypted with KEY3. The output after above processes is then swapped back according to the data type again, and a 64-bit ciphertext is produced. When the DES algorithm is configured, the result of the first DEA encrypted using KEY1 is swapped directly according to the data type, and a 64-bit ciphertext is produced. The procedure of DES / TDES ECB mode encryption is illustrated in ***Figure 13-4. DES / TDES ECB encryption***.

Figure 13-4. DES / TDES ECB encryption

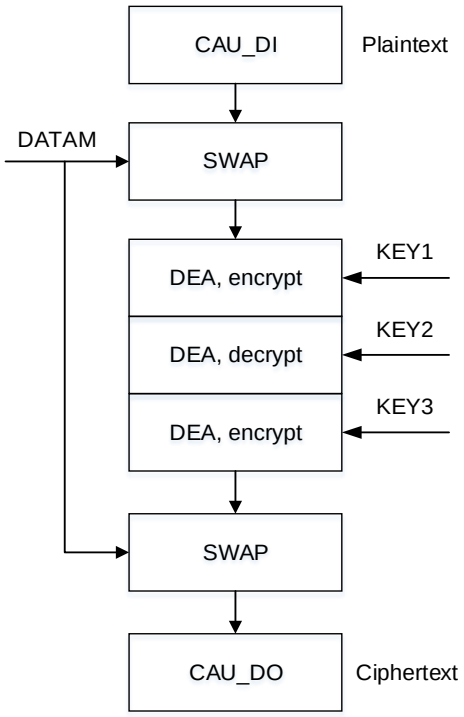

DES/TDES ECB decryption

The 64-bit input ciphertext is first obtained after data swapping according to the data type. When the TDES algorithm is configured, the input data block is read in the DEA and decrypted using KEY3. The output is fed back directly to next DEA and then encrypted using KEY2. After that, the output is fed back directly to the last DEA and decrypted with KEY1. The output after above process is then swapped back according to the data type again, and a 64-bit plaintext is produced. When the DES algorithm is configured, the result of the first DEA decrypted using KEY1 is swapped directly according to the data type, and a 64-bit plaintext is produced. The procedure of DES/TDES ECB mode decryption is illustrated in ***Figure 13-5. DES / TDES ECB decryption***.

Figure 13-5. DES / TDES ECB decryption

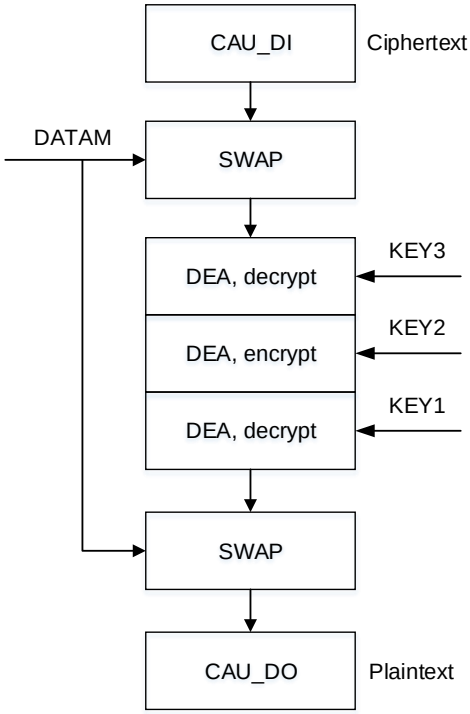

DES / TDES CBC encryption

The input data of the DEA block in CBC mode consists of two aspects: the input plaintext after data swapping according to the data type, and the initialization vectors. When the TDES algorithm is configured, the XOR result of the swapped plaintext data block and the 64-bit initialization vector CAU_IV0..1 is read in the DEA and encrypted using KEY1. The output is fed back directly to next DEA and then decrypted using KEY2. After that, the output is fed back directly to the last DEA and encrypted with KEY3. The result is then used as the next initialization vector and exclusive-ORed with the next plaintext data block to process next encryption. The above operations are repeated until the last plaintext block is encrypted. Note that the final partial data block should be encrypted in a specified manner if the plaintext message does not consist of an integral number of data blocks. At last, the output ciphertext is also obtained after data swapping according to the data type. When the DES algorithm is configured, the state and process of the second and third block of DEA should be omitted. The procedure of DES / TDES CBC mode encryption is illustrated in ***Figure 13-6. DES / TDES CBC encryption***.

Figure 13-6. DES / TDES CBC encryption

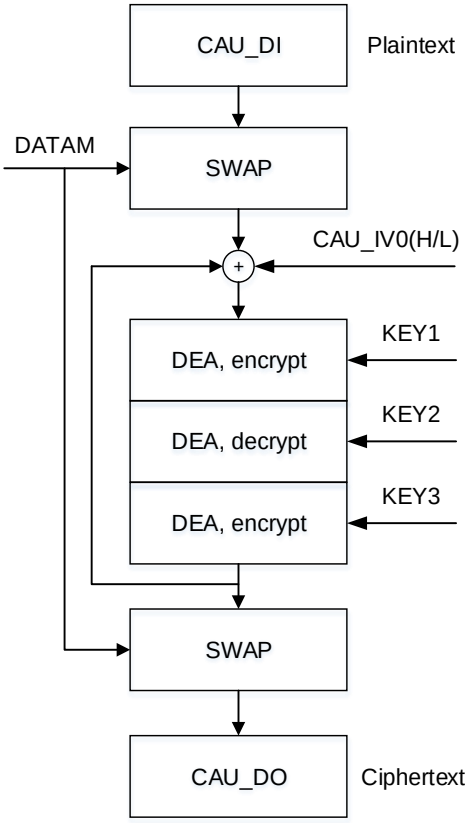

DES / TDES CBC decryption

In DES / TDES CBC decryption, when the TDES algorithm is configured, the first ciphertext block is used directly after data swapping according to the data type, it is read in the DEA and decrypted using KEY3. The output is fed back directly to next DEA and then encrypted using KEY2. After that, the output is fed back directly to the last DEA and decrypted with KEY1. The first result of above process is then XORed with the initialization vector which is the same as that used during encryption. At the same time, the first ciphertext is then used as the next initialization vector and exclusive-ORed with the next result after DEA blocks. The above operations are repeated until the last ciphertext block is decrypted. Note if the ciphertext message does not consist of an integral number of data blocks, the final partial data block should be decrypted in a specified manner same to that in encryption. At last, the output plaintext is also obtained after data swapping according to the data type. When the DES algorithm is configured, the state and process of the second and third block of DEA should also be omitted. The procedure of DES / TDES CBC mode decryption is illustrated in ***Figure 13-7. DES / TDES CBC decryption***.

Figure 13-7. DES / TDES CBC decryption

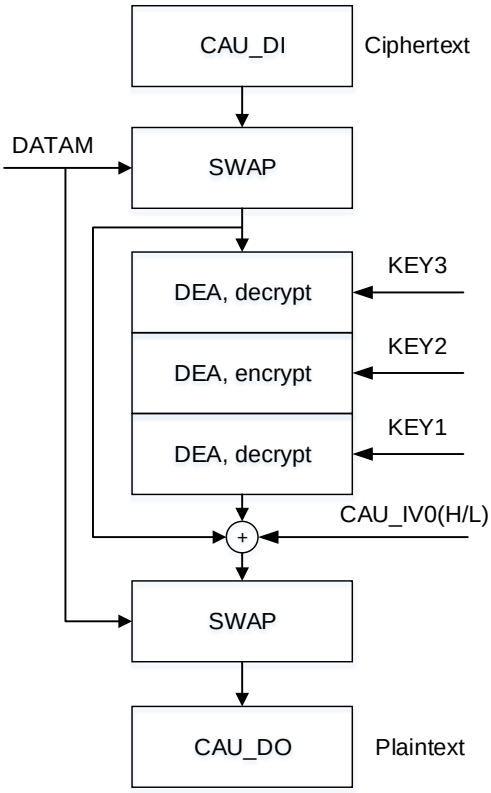

13.4.2. AES cryptographic acceleration processor

The AES cryptographic acceleration processor consists of three components, including the AES algorithm (AEA), multiple keys and the initialization vectors or Nonce.

Three lengths of AES keys are supported: 128, 192 and 256 bits, and different initialization vectors or nonce are used depends on the operation mode.

The AES key is used as [KEY3 KEY2] when the key size is configured as 128, [KEY3 KEY2 KEY1] when the key size is configured as 192 and [KEY3 KEY2 KEY1 KEY0] when the key size is configured as 256.

The thorough explanation of the key used in the AES is provided in FIPS PUB 197 (November 26, 2001), and the explanation process is omitted in this manual.

AES-ECB mode encryption

The 128-bit input plaintext is first obtained after data swapping according to the data type. The input data block is read in the AEA and encrypted using the 128, 192 or 256 -bit key. The output after above process is then swapped back according to the data type again, and a 128-bit ciphertext is produced and stored in the out FIFO. The procedure of AES ECB mode encryption is illustrated in ***Figure 13-8. AES ECB encryption***.

Figure 13-8. AES ECB encryption

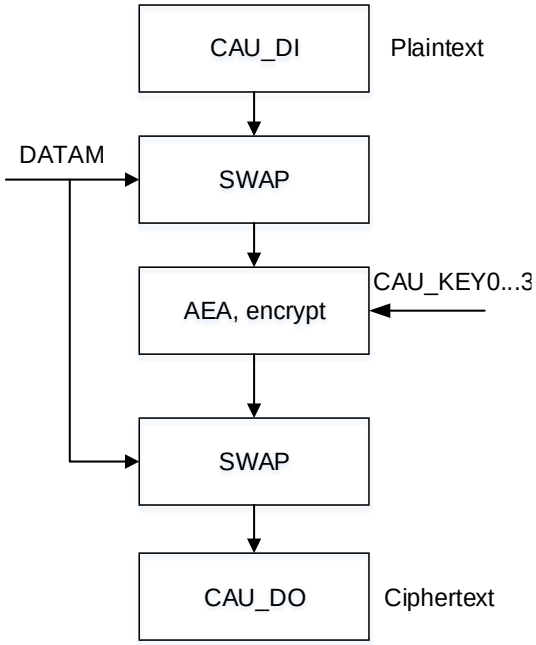

AES-ECB mode decryption

First of all, the key derivation must be completed to prepare the decryption keys, the input key of the key schedule is the same to that used in encryption. The last round key obtained from the above operation is then used as the first round key in the decryption. After the key derivation, the 128-bit input ciphertext is first obtained after data swapping according to the data type. The input data block is read in the AEA and decrypted using keys prepared above. The output is then swapped back according to the data type again, and a 128-bit plaintext is produced. The procedure of AES ECB mode decryption is illustrated in ***Figure 13-9. AES ECB decryption***.

Figure 13-9. AES ECB decryption

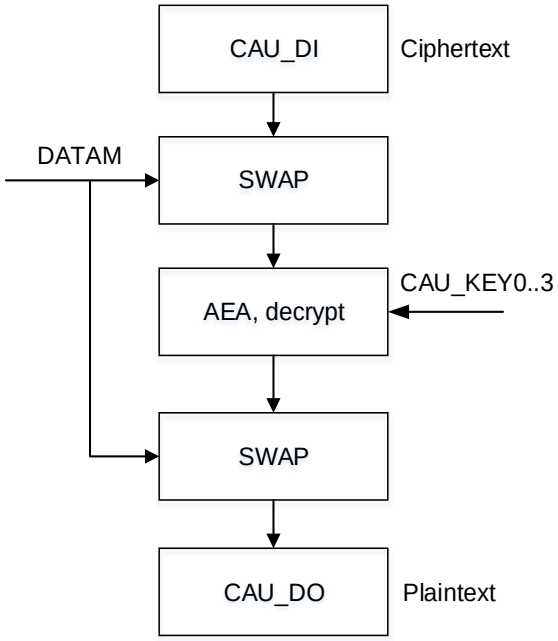

AES-CBC mode encryption

The input data of the AEA block in CBC mode consists of two aspects: the input plaintext after data swapping according to the data type, and the initialization vectors. The XOR result of the swapped plaintext data block and the 128-bit initialization vector CAU_IV0..1 is read in the AEA and encrypted using the 128-, 192-, 256-bit key. The result is then used as the next initialization vector and exclusive-ORed with the next plaintext data block to process next encryption. The above operations are repeated until the last plaintext block is encrypted. Note that the final partial data block should be encrypted in a specified manner if the plaintext message does not consist of an integral number of data blocks. At last, the output ciphertext is also obtained after data swapping according to the data type. The procedure of AES CBC mode encryption is illustrated in ***Figure 13-10. AES CBC encryption***.

Figure 13-10. AES CBC encryption

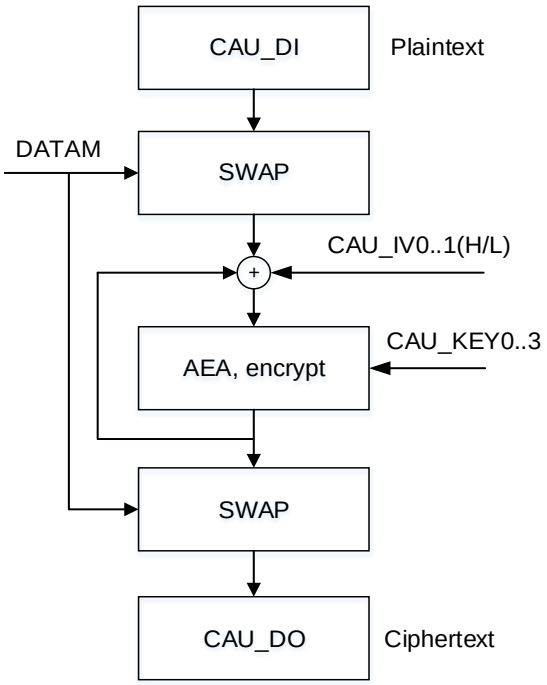

AES-CBC mode decryption

Similar to that in AES-ECB mode decryption, the key derivation also must be completed first to prepare the decryption keys, the input of the key schedule should be the same to that used in encryption. The last round key obtained from the above operation is then used as the first round key in the decryption. After the key derivation, the 128-bit input ciphertext is first obtained after data swapping according to the data type. The input data block is read in the AEA and decrypted using keys prepared above. At the same time, the first ciphertext is then used as the next initialization vector and exclusive-ORed with the next result after AEA blocks (The first initialization is obtained directly from the CAU_IV0..1 registers). The above operations are repeated until the last ciphertext block is decrypted. Note if the ciphertext message does not consist of an integral number of data blocks, the final partial data block should be decrypted in a specified manner same to that in encryption. At last, the output plaintext is also obtained after data swapping according to the data type. The procedure of AES CBC mode decryption is illustrated in ***Figure 13-11. AES CBC decryption***.

Figure 13-11. AES CBC decryption

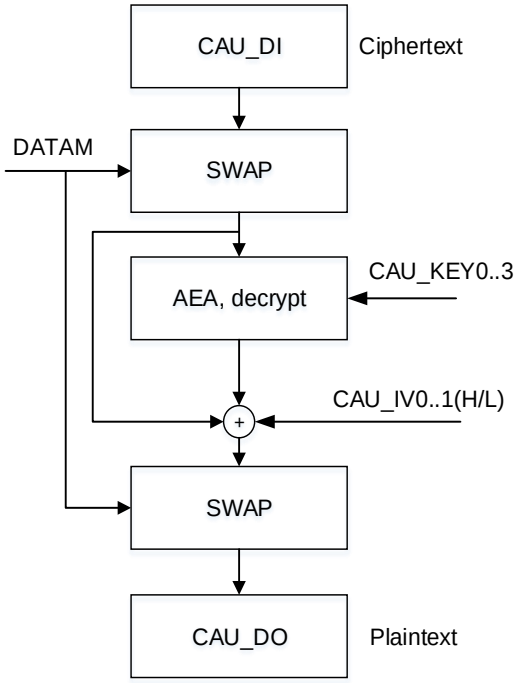

AES-CTR mode

In counter mode, a counter is used in addition with a nonce value to be encrypted and decrypted in AEA, and the result will be used for the XOR operation with the plaintext or the ciphertext. As the counter is incremented from the same initialized value for each block in encryption and decryption, the key schedule during the encryption and decryption are the same. Then decryption operation acts exactly in the same way as the encryption operation. Only the 32-bit LSB of the 128-bit initialization vector represents the counter, which means the other 96 bits are unchanged during the operation, and the initial value should be set to 1. Nonce is 32-bit single-use random value and should be updated to each communication block. And the 64-bit initialization vector is used to ensure that a given value is used only once for a given key. ***Figure 13-12. Counter block structure*** illustrates the counter block structure and ***Figure 13-13. AES CTR encryption/decryption*** shows the AES CTR encryption / decryption.

Figure 13-12. Counter block structure

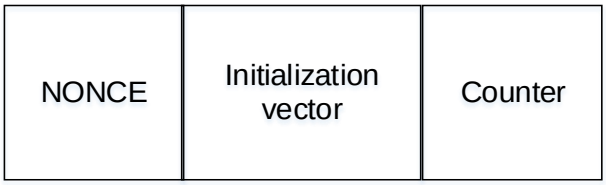

Figure 13-13. AES CTR encryption/decryption

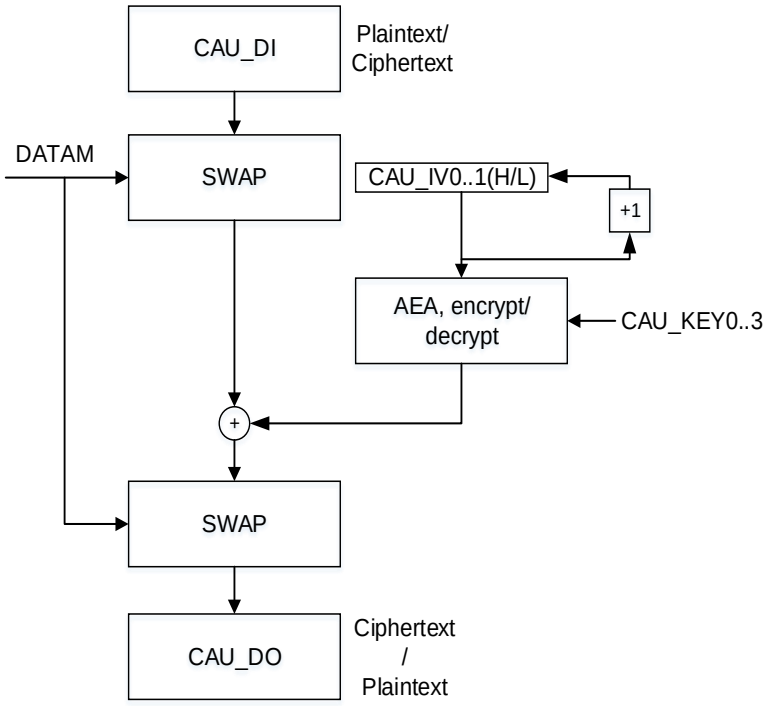

AES-GCM mode

The AES Galois / counter mode (GCM) can be used to encrypt or authenticate message, and then ciphertext and tag can be obtained. This algorithm is based on AES CTR mode to ensure confidentiality. A multiplier over a fixed finite field is used to generate the tag.

In this mode, four steps are required to perform an encryption/decryption:

1. GCM prepare phase

   The hash key is calculated and saved internally to be used later.

   (a) Clear the CAUEN bit to make sure CAU is disabled.
   (b) Configure the ALGM[3:0] bits to ‘1000’.
   (c) Configure GCM_CCMPH[1:0] bits to ‘00’.
   (d) Configure key registers and initialization vectors.
   (e) Enable CAU by writing 1 to CAUEN bit.
   (f) Wait until CAUEN bit is cleared by hardware, and then enable CAU again for following phases.

2. GCM AAD (additional authenticated data) phase

   This phase must be performed after GCM prepare phase and also precede the encryption / decryption phase. In this phase, data is authenticated but not protected.

   (g) Configure GCM_CCMPH[1:0] bits to ‘01’.
   (h) Write data into CAU_DI register, INF and IEM flags can be used to determine if the input FIFO can receive data. The size of the AAD must be a multiple of 128bits. DMA

can also be used.

(i) Repeat (h) until all AAD data are supplied, wait until BUSY bit is cleared.

3. GCM encryption / decryption phase

This phase must be performed after GCM AAD phase. In this phase, the message is authenticated and encrypted / decrypted.

(j) Configure GCM_CCMPH[1:0] bits to '10'.
(k) Configure the computation direction in CAUDIR.
(l) Write data into CAU_DI register, INF and IEM flags can be used to determine if the input FIFO can receive data. ONE and OFU flags can be used to check if the output FIFO is not empty. If so, read the CAU_DO register. DMA can also be used.
(m) Repeat (l) step until all payload blocks are processed.

4. GCM tag phase

In this phase, the final authentication tag is generated.

(n) Configure GCM_CCMPH[1:0] bits to '11'.
(o) Write the input into the CAU_DI register, 4 times write operation is needed. The input consists of the AAD data size (64bits) and the payload data size (64bits).
(p) Wait until the ONE flag is set to 1, and then read CAU_DO 4 times. The output corresponds to the authentication tag.
(q) Disable the CAU.

Note: The key should be prepared at the beginning when a decryption is performed.

AES-GMAC mode

The AES Galois message authentication code mode is also supported to authenticate the message. It is processing based on the AES-GCM mode, while the encryption / decryption phase is by-passed.

AES-CCM mode

The AES combined cipher machine mode, which is similar to AES-GCM mode, also allows encrypting and authenticating message. It is also based on AES-CTR mode to ensure confidentiality. In this mode, AES-CBC is used to generate a 128-bit tag.

The CCM standard (RFC 3610 Counter with CBC-MAC (CCM) dated September 2003) defines particular encoding rules for the first authentication block (B0 in the standard). In particular, the first block includes flags, a nonce and the payload length expressed in bytes. The CCM standard specifies another format, called A or counter, for encryption / decryption. The counter is incremented during the encryption / decryption phase and its 32 LSB bits are initialized to '1' during the tag generation (A0 packet in the CCM standard).

Note: The formatting operation of B0 packet should be handled by software.

In this mode, four steps are required to perform an encryption / decryption:

1. CCM prepare phase

   In this phase, B0 packet (the first packet) is programmed into the CAU_DI register. CAU_DO never contain data in this phase.

   (a) Clear the CAUEN bit to make sure CAU is disabled.
   (b) Configure the ALGM[3:0] bits to '1001'.
   (c) Configure GCM_CCMPH[1:0] bits to '00'.
   (d) Configure key registers and initialization vectors.
   (e) Enable CAU by writing 1 to CAUEN bit.
   (f) Program the B0 packet into the CAU_DI.
   (g) Wait until CAUEN is cleared by hardware, and then enable CAU again for following phases.

2. CCM AAD (additional authenticated data) phase

   This phase must be performed after CCM prepare phase and also precede the encryption / decryption phase. In this phase, CAU_DO never contain data.

   This phase can be by-passed if there is no additional authenticated data.

   (h) Configure GCM_CCMPH[1:0] bits to '01'
   (i) Write data into CAU_DI register, INF and IEM flags can be used to determine if the input FIFO can receive data. The size of the AAD must be a multiple of 128 bits. DMA can also be used.
   (j) Repeat (i) until all additional authenticated data are supplied, wait until BUSY bit is cleared

3. CCM encryption / decryption phase

   This phase must be performed after CCM AAD phase. In this phase, the message is authenticated and encrypted / decrypted.

   Like GCM, the CCM chaining mode can be applied on a message composed only by plaintext authenticated data (that is, only AAD, no payload). Note that this way of using CCM is not called CMAC (it is not similar to GCM / GMAC).

   (k) Configure GCM_CCMPH[1:0] bits to '10'
   (l) Configure the computation direction in CAUDIR
   (m) Write data into CAU_DI register, INF and IEM flags can be used to determine if the input FIFO can receive data. ONE and OFU flags can be used to check if the output FIFO is not empty. If so, read the CAU_DO register. DMA can also be used.
   (n) Repeat (m) step until all payload blocks are processed.

4. CCM tag phase

   In this phase, the final authentication tag is generated.

   (o) Configure GCM_CCMPH[1:0] bits to '11'
   (p) Write the 128 bit input into the CAU_DI register, 4 times of write operation to CAU_DI

is needed. The input is the A0 value.

(q) Wait until the ONE flag is set to 1, and then read CAU_DO 4 times. The output corresponds to the authentication tag.

(r) Disable the CAU

AES-CFB mode

The Cipher Feedback (CFB) mode is a confidentiality mode that features the feedback of successive ciphertext segments into the input blocks of the forward cipher to generate output blocks that are exclusive-ORed with the plaintext to produce the ciphertext, and the decryption process is similar to the encryption described before.

AES-OFB mode

The Output Feedback (OFB) mode is a confidentiality mode that features the iteration of the forward cipher on an IV to generate a sequence of output blocks that are exclusive-ORed with the plaintext to produce the ciphertext, and the decryption process is similar to the encryption described before.

13.5. Operating modes

Encryption

1. If users want to use AES key from EFUSE, go to step 2, otherwise, go to step 5.
2. Write AES keys (in little endian) to EFUSE_AES_KEYx registers in order, check whether the CRC values are right and then write the AES keys to EFUSE.
3. Set AESEN bit in EFUSE_USER_CTL register and then write this bit to efuse.
4. Make sure AESNCAU bit in the EFUSE_MCU_RSV register is 0.
5. Disable the CAU by resetting the CAUEN bit in the CAU_CTL register.
6. If the AES key comes from registers of the CAU, skip this step. If the AES key comes from efuse, make sure that the key has been written to efuse and set KEY_SEL bit.
7. Select and configure the key length with the KEYM bits in the CAU_CTL register if AES algorithm is chosen. If the AES key comes from efuse, skip this step.
8. Reset KEY_SEL bit in the CAU_CTL register then configure the CAU_KEY0..3(H / L) registers according to the algorithm. If the AES key comes from efuse, skip this step.
9. Configure the DATAM bit in the CAU_CTL register to select the data swapping type.
10. Configure the algorithm (DES / TDES / AES) and the chaining mode (ECB / CBC / CTR / GCM / GMAC / CCM / CFB / OFB) by writing the ALGM[3:0] bit in the CAU_CTL register.
11. Configure the encryption direction by writing 0 to the CAUDIR bit in the CAU_CTL register.
12. Configure the initialization vectors by writing the CAU_IV0..1 registers.
13. Flush the input FIFO and output FIFO by configure the FFLUSH bit in the CAU_CTL register when CAUEN is 0.

14. Enable the CAU by set the CAUEN bit as 1 in the CAU_CTL register.
15. If the INF bit in the CAU_STAT0 register is 1, then write data blocks into the CAU_DI register. The data can be transferred by DMA / CPU during interrupts / no DMA or interrupts.
16. Wait for ONE bit in the CAU_STAT0 register is 1 then read the CAU_DO register. The output data can also be transferred by DMA / CPU during interrupts / no DMA or interrupts.
17. Repeat steps 15, 16 until all data blocks has been encrypted.

Note: AES key length is forced to 128-bits and ALGM[3:0] is forced to 0b0110 when KEY_SEL is configured to 1.

Decryption

1. Disable the CAU by resetting the CAUEN bit in the CAU_CTL register.
2. Select and configure the key length with the KEYM bits in the CAU_CTL register if AES algorithm is chosen.
3. Reset KEY_SEL bit in the CAU_CTL register then configure the CAU_KEY0..3(H / L) registers according to the algorithm. If the key comes from efuse, make sure that the key has been written to EFUSE and AESNCAU bit in the EFUSE_MCU_RSV register is 0, then set KEY_SEL bit.
4. Configure the DATAM bit in the CAU_CTL register to select the data swapping type.
5. Configure the ALGM[3:0] bits to “0111” in the CAU_CTL register to complete the key derivation.
6. Enable the CAU by set the CAUEN bit as 1.
7. Wait until the BUSY and CAUEN bit return to 0 to make sure that the decryption keys are prepared.
8. Configure the algorithm (DES / TDES / AES) and the chaining mode (ECB / CBC / CTR / GCM / GMAC / CCM / CFB / OFB) by writing the ALGM[3:0] bit in the CAU_CTL register.
9. Configure the decryption direction by writing 1 to the CAUDIR bit in the CAU_CTL register.
10. Configure the initialization vectors by writing the CAU_IV0..1 registers.
11. Flush the input FIFO and output FIFO by configure the FFLUSH bit in the CAU_CTL register when CAUEN is 0.
12. Enable the CAU by set the CAUEN bit as 1 in the CAU_CTL register.
13. If the INF bit in the CAU_STAT0 register is 1, then write data blocks into the CAU_DI register. The data can be transferred by DMA / CPU during interrupts/no DMA or interrupts.
14. Wait for ONE bit in the CAU_STAT0 register is 1, then read the CAU_DO register. The output data can also be transferred by DMA / CPU during interrupts / no DMA or interrupts.
15. Repeat steps 13, 14 until all data blocks has been decrypted.

Data append

For GCM payload encryption or CCM payload decryption, CAU supports non 128 bit integer multiple data block processing. When the last data block is less than 128bit, use ‘0’ to fill the remaining bits, and then configure the number of bytes to be filled in the NBPILB bitfield of the CAU_CTL register. AES will automatically remove the the number of filled pads and encrypt / decrypt it. It should be noted that the NBPILB[3:0] bitfield should be configured after the encryption / decryption of the penultimate data block is completed.

13.6. CAU DMA interface

The DMA can be used to transfer data blocks with the interface of the cryptographic acceleration unit. The operations can be controlled by the CAU_DMAEN register. DMAIEN is used to enable the DMA request during the input phase, then a word is written into CAU_DI from DMA. DMAOEN is used to enable the DMA request during the output phase, then a word is read from the CAU.

Single and Burst transfers are both supported to ensure the data transfer if the number of words is not an integral multiple of burst size. Note the DMA controller should be configured to perform burst of 4 words or less to make sure no data will be lost. DMA channel for output data has a higher priority than that channel for input data so that the output FIFO can be empty earlier than that the input FIFO is full.

13.7. CAU interrupts

There are two types of interrupt registers in CAU, which are CAU_STAT1 and CAU_INTF. In CAU, the interrupt is used to indicate the situation of the input and output FIFO.

Any of input and output FIFO interrupt can be enabled or disabled by configuring the Interrupt Enable register CAU_INTEN. Value 1 of the register enable the interrupts.

Input FIFO interrupt

The input FIFO interrupt is asserted when the number of words in the input FIFO is less than four words, then ISTA is asserted. And if the input FIFO interrupt is enabled by IINTEN with a 0 value, the IINTF is also asserted. Note if the CAUEN is low, then the ISTA and IINTF are also always low.

Output FIFO interrupt

The output FIFO interrupt is asserted when the number of words in the output FIFO is more than one words, then OSTA is asserted. And if the output FIFO interrupt is enabled by OINTEN with a 0 value, the OINTF is also asserted. Note Unlike that of Input FIFO interrupt, the value of CAUEN will never affect the situation of OSTA and OINTF.

13.8. CAU suspended mode

It is possible to suspend a data block if another new data block with a higher priority needs to be processed in CAU. The following steps can be performed to complete the encryption / decryption acceleration of the suspended data blocks.

When DMA transfer is used:

1. Stop the current input transfer. Clear the DMAIEN bit in the CAU_DMAEN register.
2. When it is DES or AES, wait until both the input and output FIFO are both empty if the input FIFO is not empty (IEM = 0), then write a word of data into CAU_DI register, do as so until the IEM is checked to be 1, then wait until the BUSY bit is cleared, so that the next data block will not be affected by the last one. Case of TDES is similar to that of AES except that it does not need to wait until the input FIFO is empty.
3. Stop the output transfer by clearing the DMAOEN bit in the CAU_DMAEN register. And disable the CAU by clearing the CAUEN bit in the CAU_CTL register.
4. Save the configuration, including the key size, data type, operation mode, direction, GCM CCM phase and the key values. When it is CBC, CTR, GCM, GMAC, CCM, CFB or OFB chaining mode, the initialization vectors should also be stored. When it is GCM, GMAC or CCM mode, the context switch CAU_GCMCCMCTXSx (x=0..7) and CAU_GCMCTXSx (x=0..7) registers should also be stored.
5. Configure and process the new data block.
6. Restore the process before. Configure the CAU with the parameters stored before, and prepare the key and initialization vectors, and the context switch registers CAU_GCMCCMCTXSx (x=0..7) and CAU_GCMCTXSx (x=0..7) should also be restored. Then enable CAU by setting the CAUEN bit in the CAU_CTL register.

When data transfer is done by CPU access to CAU_DI and CAU_DO:

1. When the data transfer is done by CPU access, then wait for the fourth read of the CAU_DO register and before the next CAU_DI write access so that the message is suspended at the end of a block processing.
2. Disable the CAU by clearing the CAUEN bit in the CAU_CTL register.
3. Save the configuration, including the key size, data type, operation mode, direction, GCM CCM phase and the key values. When it is CBC, CTR, GCM, GMAC, CCM, CFB or OFB chaining mode, the initialization vectors should also be stored. When it is GCM, GMAC or CCM mode, the context switch CAU_GCMCCMCTXSx (x=0..7) and CAU_GCMCTXSx (x=0..7) registers should also be stored.
4. Configure and process the new data block.
5. Restore the process before. Configure the CAU with the parameters stored before, and prepare the key and initialization vectors, and the context switch registers CAU_GCMCCMCTXSx (x=0..7) and CAU_GCMCTXSx (x=0..7) should also be restored. Then enable CAU by setting the CAUEN bit in the CAU_CTL register.

13.9. Register definition

CAU base address: 0x4802 1000

13.9.1. Control register (CAU_CTL)

Address offset: 0x00

Reset value: 0x0000 0000

This register has to be accessed by word (32-bit).

31	30	29	28	27	26	25	24	23	22	21	20	19	18	17	16
Reserved								NBPILB[3:0]				ALGM[3]	Reserved	GCM_CCMPH[1:0]	
												rw		rw	

15	14	13	12	11	10	9	8	7	6	5	4	3	2	1	0
CAUEN	FFLUSH	Reserved				KEYM[1:0]		DATAM[1:0]		ALGM[2:0]			CAUDIR	Reserved	KEY_SEL
rw	w					rw		rw		rw			rw		rw

Bits	Fields	Descriptions
31:24	Reserved	Must be kept at reset value.
23:20	NBPILB[3:0]	Number of bytes padding in last block of payload 0000: all bytes are valid (no padding) 0001: one padding byte of last block ... 1111: 15 padding bytes of last block
19	ALGM[3]	Encryption / decryption algorithm mode bit 3
18	Reserved	Must be kept at reset value.
17:16	GCM_CCMPH[1:0]	GCM CCM phase 00: prepare phase 01: AAD phase 10: encryption / decryption phase 11: tag phase
15	CAUEN	CAU Enable 0: CAU is disabled 1: CAU is enabled **Note:** the CAUEN can be cleared automatically when the key derivation (ALGM=0111b) is finished or the AES-GCM or AES-CCM initial phase finished.
14	FFLUSH	Flush FIFO 0: No effect 1: When CAUEN=1, flush the input and output FIFO Reading this bit always returns 0

13:10	Reserved	Must be kept at reset value.
9:8	KEYM[1:0]	AES key size mode configuration, must be configured when BUSY=0 00: 128-bit key length 01: 192-bit key length 10: 256-bit key length 11: never use
7:6	DATAM[1:0]	Data swapping type mode configuration, must be configured when BUSY=0 00: No swapping 01: Half-word swapping 10: Byte swapping 11: Bit swapping
5:3	ALGM[2:0]	Encryption / decryption algorithm mode bit 0 to bit 2 These bits and bit 19 of CAU_CTL must be configured when BUSY=0 0000: TDES-ECB with CAU_KEY1, 2, 3. Initialization vectors (CAU_IV0..1) are not used 0001: TDES-CBC with CAU_KEY1, 2, 3. Initialization vectors (CAU_IV0) is used to XOR with data blocks 0010: DES-ECB with only CAU_KEY1 Initialization vectors (CAU_IV0..1) are not used 0011: DES-CBC with only CAU_KEY1 Initialization vectors (CAU_IV0) is used to XOR with data blocks 0100: AES-ECB with CAU_KEY0, 1, 2, 3. Initialization vectors (CAU_IV0..1) are not used 0101: AES-CBC with CAU_KEY0, 1, 2, 3. Initialization vectors (CAU_IV0..1) are used to XOR with data blocks 0110: AES_CTR with CAU_KEY0, 1, 2, 3. Initialization vectors (CAU_IV0..1) are used to XOR with data blocks In this mode, encryption and decryption are same, then the CAUDIR is disregarded. 0111: AES key derivation for decryption mode. The input key must be same to that used in encryption. The BUSY bit is set until the process has been finished, and CAUEN is then cleared. 1000: Galois Counter Mode (GCM). This algorithm mode is also used for GMAC algorithm. 1001: Counter with CBC-MAC (CCM). 1010: Cipher Feedback (CFB) mode 1011: Output Feedback (OFB) mode
2	CAUDIR	CAU direction, must be configured when BUSY=0 0: encryption 1: decryption
1	Reserved	Must be kept at reset value.

0	KEY_SEL	Key select 0: Use key from CAU_KEY0..3(H/L) 1:Use key from efuse

13.9.2. Status register 0 (CAU_STAT0)

Address offset: 0x04

Reset value: 0x0000 0003

This register has to be accessed by word (32-bit).

31	30	29	28	27	26	25	24	23	22	21	20	19	18	17	16
Reserved															

15	14	13	12	11	10	9	8	7	6	5	4	3	2	1	0
Reserved											BUSY	OFU	ONE	INF	IEM
											r	r	r	r	r

Bits	Fields	Descriptions
31:5	Reserved	Must be kept at reset value.
4	BUSY	Busy bit 0: No processing. This is because: - CAU is disabled by CAUEN=0 or the processing has been completed. - No enough data or no enough space in the input / output FIFO to perform a data block 1: CAU is processing data or key derivation.
3	OFU	Output FIFO is full 0: Output FIFO is not full 1: Output FIFO is full
2	ONE	Output FIFO is not empty 0: Output FIFO is empty 1: Output FIFO is not empty
1	INF	Input FIFO is not full 0: Input FIFO is full 1: Input FIFO is not full
0	IEM	Input FIFO is empty 0: Input FIFO is not empty 1: Input FIFO is empty

13.9.3. Data input register (CAU_DI)

Address offset: 0x08

Reset value: 0x0000 0000

The data input register is used to transfer plaintext or ciphertext blocks into the input FIFO for processing. The MSB is firstly written into the FIFO and the LSB is the last one. If the CAUEN is 0 and the input FIFO is not empty, when it is read, then the first data in the FIFO is popped out and returned. If the CAUEN is 1, the returned value is undefined. Once it is read, then the FIFO must be flushed.

This register has to be accessed by word (32-bit).

31	30	29	28	27	26	25	24	23	22	21	20	19	18	17	16
DI[31:16]															
rw															

15	14	13	12	11	10	9	8	7	6	5	4	3	2	1	0
DI[15:0]															
rw															

Bits	Fields	Descriptions
31:0	DI[31:0]	Data input Write these bits will write data to input FIFO, read these bits will return input FIFO value if CAUEN is 0, or it will return an undefined value

13.9.4. Data output register (CAU_DO)

Address offset: 0x0C
Reset value: 0x0000 0000

The data output register is a read only register. It is used to receive plaintext or ciphertext results from the output FIFO. Similar to CAU_DI, the MSB is read at first while the LSB is read at last.

This register has to be accessed by word (32-bit).

31	30	29	28	27	26	25	24	23	22	21	20	19	18	17	16
DO[31:16]															
r															

15	14	13	12	11	10	9	8	7	6	5	4	3	2	1	0
DO[15:0]															
r															

Bits	Fields	Descriptions
31:0	DO[31:0]	Data output These bits are read only, read these bits return output FIFO value.

13.9.5. DMA enable register (CAU_DMAEN)

Address offset: 0x10

Reset value: 0x0000 0000

This register has to be accessed by word (32-bit).

31	30	29	28	27	26	25	24	23	22	21	20	19	18	17	16
Reserved															

15	14	13	12	11	10	9	8	7	6	5	4	3	2	1	0
Reserved														DMAOEN	DMAIEN
														rw	rw

Bits	Fields	Descriptions
31:2	Reserved	Must be kept at reset value.
1	DMAOEN	DMA output enable 0: DMA for OUT FIFO data is disabled 1: DMA for OUT FIFO data is enabled
0	DMAIEN	DMA input enable 0: DMA for IN FIFO data is disabled 1: DMA for IN FIFO data is enabled

13.9.6. Interrupt enable register (CAU_INTEN)

Address offset: 0x14

Reset value: 0x0000 0000

This register has to be accessed by word (32-bit).

31	30	29	28	27	26	25	24	23	22	21	20	19	18	17	16
Reserved															

15	14	13	12	11	10	9	8	7	6	5	4	3	2	1	0
Reserved														OINTEN	IINTEN
														rw	rw

Bits	Fields	Descriptions
31:2	Reserved	Must be kept at reset value.
1	OINTEN	OUT FIFO interrupt enable 0: OUT FIFO interrupt is disable 1: OUT FIFO interrupt is enable
0	IINTEN	IN FIFO interrupt enable 0: IN FIFO interrupt is disable

1: IN FIFO interrupt is enable

13.9.7. Status register 1 (CAU_STAT1)

Address offset: 0x18

Reset value: 0x0000 0001

This register has to be accessed by word (32-bit).

31	30	29	28	27	26	25	24	23	22	21	20	19	18	17	16
Reserved															

15	14	13	12	11	10	9	8	7	6	5	4	3	2	1	0
Reserved														OSTA	ISTA
														r	r

Bits	Fields	Descriptions
31:2	Reserved	Must be kept at reset value.
1	OSTA	OUT FIFO interrupt status 0: OUT FIFO interrupt status not pending 1: OUT FIFO interrupt status pending
0	ISTA	IN FIFO interrupt status 0: IN FIFO interrupt not pending 1: IN FIFO interrupt flag pending

13.9.8. Interrupt flag register (CAU_INTF)

Address offset: 0x1C

Reset value: 0x0000 0000

This register has to be accessed by word (32-bit).

31	30	29	28	27	26	25	24	23	22	21	20	19	18	17	16
Reserved															

15	14	13	12	11	10	9	8	7	6	5	4	3	2	1	0
Reserved														OINTF	IINTF
														r	r

Bits	Fields	Descriptions
31:2	Reserved	Must be kept at reset value.
1	OINTF	OUT FIFO enabled interrupt flag 0: OUT FIFO Interrupt not pending 1: OUT FIFO Interrupt pending

0	IINTF	IN FIFO enabled interrupt flag 0: IN FIFO Interrupt not pending 1: IN FIFO Interrupt pending when CAUEN is 1

13.9.9. Key registers (CAU_KEY0..3(H / L))

Address offset: 0x20 to 0x3C
Reset value: 0x0000 0000

These registers have to be accessed by word (32-bit), and all of them must be written when BUSY is 0.

In DES mode, only CAU_KEY1 is used.

In TDES mode, CAU_KEY1, CAU_KEY2 and CAU_KEY3 are used.

In AES-128 mode, KEY2H[31:0] || KEY2L[31:0] is used as AES_KEY[0:63], and KEY3H[31:0] || KEY3L[31:0] is used as AES_KEY[64:127].

In AES-192 mode, KEY1H[31:0] || KEY1L[31:0] is used as AES_KEY[0:63], KEY2H[31:0] || KEY2L[31:0] is used as AES_KEY[64:127], and KEY3H[31:0] || KEY3L[31:0] is used as AES_KEY[128:191].

In AES-256 mode, KEY0H[31:0] || KEY0L[31:0] is used as AES_KEY[0:63], KEY1H[31:0] || KEY1L[31:0] is used as AES_KEY[64:127], KEY2H[31:0] || KEY2L[31:0] is used as AES_KEY[128:191], and KEY3H[31:0] || KEY3L[31:0] is used as AES_KEY[192:255].

Note: “||” is a concatenation operator. For example, X || Y denotes the concatenation of two bit strings X and Y.

CAU_KEY0H

Address offset: 0x20
Reset value: 0x0000 0000

This register has to be accessed by word (32-bit).

31	30	29	28	27	26	25	24	23	22	21	20	19	18	17	16
KEY0H[31:16]															
w															

15	14	13	12	11	10	9	8	7	6	5	4	3	2	1	0
KEY0H[15:0]															
w															

CAU_KEY0L

Address offset: 0x24
Reset value: 0x0000 0000

This register has to be accessed by word (32-bit).

31	30	29	28	27	26	25	24	23	22	21	20	19	18	17	16
KEY0L[31:16]															
w															

15	14	13	12	11	10	9	8	7	6	5	4	3	2	1	0
KEY0L[15:0]															
w															

CAU_KEY1H

Address offset: 0x28

Reset value: 0x0000 0000

This register has to be accessed by word (32-bit).

31	30	29	28	27	26	25	24	23	22	21	20	19	18	17	16
KEY1H[31:16]															
w															

15	14	13	12	11	10	9	8	7	6	5	4	3	2	1	0
KEY1H[15:0]															
w															

CAU_KEY1L

Address offset: 0x2C

Reset value: 0x0000 0000

This register has to be accessed by word (32-bit).

31	30	29	28	27	26	25	24	23	22	21	20	19	18	17	16
KEY1L[31:16]															
w															

15	14	13	12	11	10	9	8	7	6	5	4	3	2	1	0
KEY1L[15:0]															
w															

CAU_KEY2H

Address offset: 0x30

Reset value: 0x0000 0000

This register has to be accessed by word (32-bit).

31	30	29	28	27	26	25	24	23	22	21	20	19	18	17	16
KEY2H[31:16]															
w															

15	14	13	12	11	10	9	8	7	6	5	4	3	2	1	0
KEY2H[15:0]															
w															

CAU_KEY2L

Address offset: 0x34

Reset value: 0x0000 0000

This register has to be accessed by word (32-bit).

31	30	29	28	27	26	25	24	23	22	21	20	19	18	17	16
KEY2L[31:16]															
w															

15	14	13	12	11	10	9	8	7	6	5	4	3	2	1	0
KEY2L[15:0]															
w															

CAU_KEY3H

Address offset: 0x38

Reset value: 0x0000 0000

This register has to be accessed by word (32-bit).

31	30	29	28	27	26	25	24	23	22	21	20	19	18	17	16
KEY3H[31:16]															
w															

15	14	13	12	11	10	9	8	7	6	5	4	3	2	1	0
KEY3H[15:0]															
w															

CAU_KEY3L

Address offset: 0x3C

Reset value: 0x0000 0000

This register has to be accessed by word (32-bit).

31	30	29	28	27	26	25	24	23	22	21	20	19	18	17	16
KEY3L[31:16]															
w															

15	14	13	12	11	10	9	8	7	6	5	4	3	2	1	0
KEY3L[15:0]															
w															

Bits	Fields	Descriptions
31:0	KEY0...3(H / L)	The key for DES, TDES, AES

13.9.10. Initial vector registers (CAU_IV0..1(H / L))

Address offset: 0x40 to 0x4C

Reset value: 0x0000 0000

This registers have to be accessed by word (32-bit), and all of them must be written when BUSY is 0.

In DES / TDES mode, IV0H is the leftmost bits, and IV0L is the rightmost bits of the initialization vectors.

In AES mode, IV0H is the leftmost bits, and IV1L is the rightmost bits of the initialization vectors.

CAU_IV0H

Address offset: 0x40
Reset value: 0x0000 0000

This register has to be accessed by word (32-bit).

31	30	29	28	27	26	25	24	23	22	21	20	19	18	17	16
IV0H[31:16]															
rw															

15	14	13	12	11	10	9	8	7	6	5	4	3	2	1	0
IV0H[15:0]															
rw															

CAU_IV0L

Address offset: 0x44
Reset value: 0x0000 0000

This register has to be accessed by word (32-bit).

31	30	29	28	27	26	25	24	23	22	21	20	19	18	17	16
IV0L[31:16]															
rw															

15	14	13	12	11	10	9	8	7	6	5	4	3	2	1	0
IV0L[15:0]															
rw															

CAU_IV1H

Address offset: 0x48
Reset value: 0x0000 0000

This register has to be accessed by word (32-bit).

31	30	29	28	27	26	25	24	23	22	21	20	19	18	17	16
IV1H[31:16]															
rw															

15	14	13	12	11	10	9	8	7	6	5	4	3	2	1	0
IV1H[15:0]															
rw															

CAU_IV1L

Address offset: 0x4C

Reset value: 0x0000 0000

This register has to be accessed by word (32-bit).

31	30	29	28	27	26	25	24	23	22	21	20	19	18	17	16
IV1L[31:16]															
rw															

15	14	13	12	11	10	9	8	7	6	5	4	3	2	1	0
IV1L[15:0]															
rw															

Bits	Fields	Descriptions
31:0	IV0...1(H / L)	The initialization vector for DES, TDES, AES

13.9.11. GCM or CCM mode context switch register x (CAU_GCMCCMCTXSx) (x=0..7)

Address offset: 0x50 to 0x6C

Reset value: 0x0000 0000

This register has to be accessed by word (32-bit).

31	30	29	28	27	26	25	24	23	22	21	20	19	18	17	16
CTXx[31:16]															
rw															

15	14	13	12	11	10	9	8	7	6	5	4	3	2	1	0
CTXx[15:0]															
rw															

Bits	Fields	Descriptions
31:0	CTXx[31:0]	The internal status of the CAU core. Read and save the register data when a high-priority task is coming to be processed, and restore the saved data back to the registers to resume the suspended processing. **Note:** These registers are used only when GCM, GMAC or CCM mode is selected.

13.9.12. GCM mode context switch register x (CAU_GCMCTXSx) (x=0..7)

Address offset: 0x70 to 0x8C

Reset value: 0x0000 0000

This register has to be accessed by word (32-bit).

31	30	29	28	27	26	25	24	23	22	21	20	19	18	17	16
CTXx[31:16]															

15	14	13	12	11	10	9	8	7	6	5	4	3	2	1	0
CTXx[15:0] (rw)															

Bits	Fields	Descriptions
31:0	CTXx[31:0]	The internal status of the CAU core. Read and save the register data when a high-priority task is coming to be processed, and restore the saved data back to the registers to resume the suspended processing. **Note:** These registers are used only when GCM or GMAC mode is selected.

14. Hash Acceleration Unit (HAU)

14.1. Overview

The hash acceleration unit is used for information security. The secure hash algorithm (SHA-1, SHA-224, SHA-256), the message-digest algorithm (MD5) and the keyed-hash message authentication code (HMAC) algorithm are supported for various applications. The digest will be computed and the length is 160 / 224 / 256 / 128 bits for a message up to (2^{64} - 1) bits computed by SHA-1, SHA-224, SHA-256 and MD5 algorithms respectively. In HMAC algorithm, SHA-1, SHA-224, SHA-256 or MD5 will be called twice as hash functions and authenticating messages can be produced.

The HAU is fully compliant implementation of the following standards:

- Federal Information Processing Standards Publication 180-4(FIPS PUB 180-4).
- Secure Hash Standard specifications (SHA-1, SHA-224, SHA-256).
- Internet Engineering Task Force Request for Comments number 1321 (IETF RFC 1321) specifications (MD5).

14.2. Characteristics

- 32-bit AHB slave peripheral.
- High performance of computation of hash algorithms.
- Little-endian data representation.
- Multiple data types are supported, including no swapping, half-word swapping, byte swapping, and bit swapping with 32-bit data words.
- Automatic data padding to fill the 512-bit message block for digest computation.
- DMA transfer is supported.
- Hash / HMAC process suspended mode.

14.3. HAU data type

The hash acceleration unit receives data words of 32 bits at a time, while they are processed in 512-bits blocks. For each input word, according to the data type, the data could be bit / byte / half-word / no swapped before they are transferred into the hash acceleration core. The same swapping operation should be also performed on the core output data before they are collected. Note the least-significant data always occupies the lowest address location no matter which data type is configured, because the system memory is little-endian. However, the computation of SHA-1, SHA-224 and SHA-256 are big-endian.

Figure 14-1. DATAM No swapping and Half-word swapping and ***Figure 14-2. DATAM Byte swapping and Bit swapping*** illustrate the data swapping according to different data

types.

Figure 14-1. DATAM No swapping and Half-word swapping

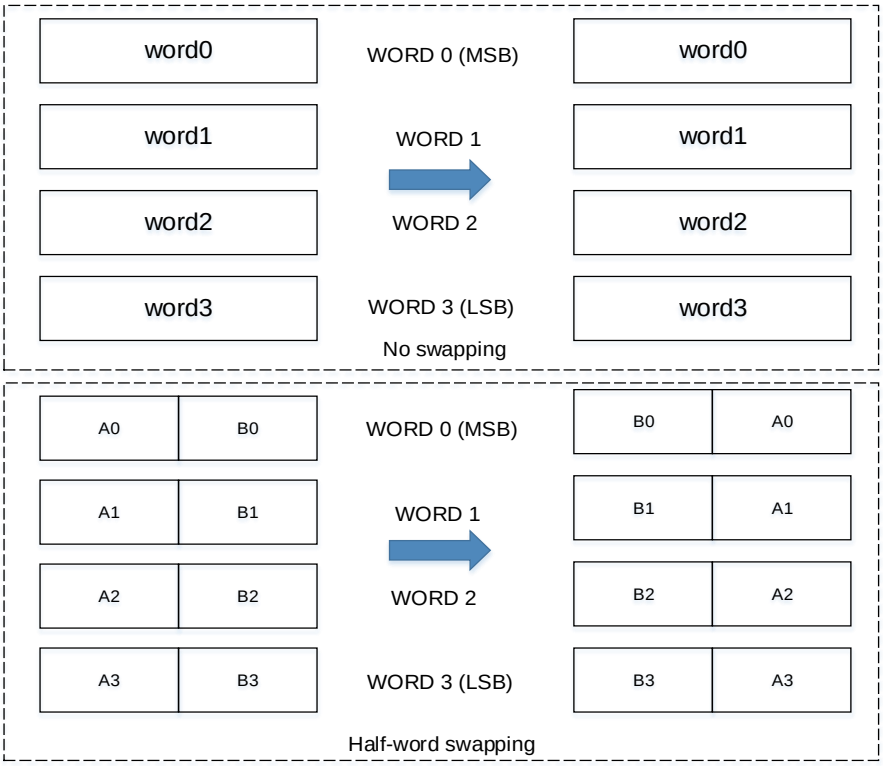

Figure 14-2. DATAM Byte swapping and Bit swapping

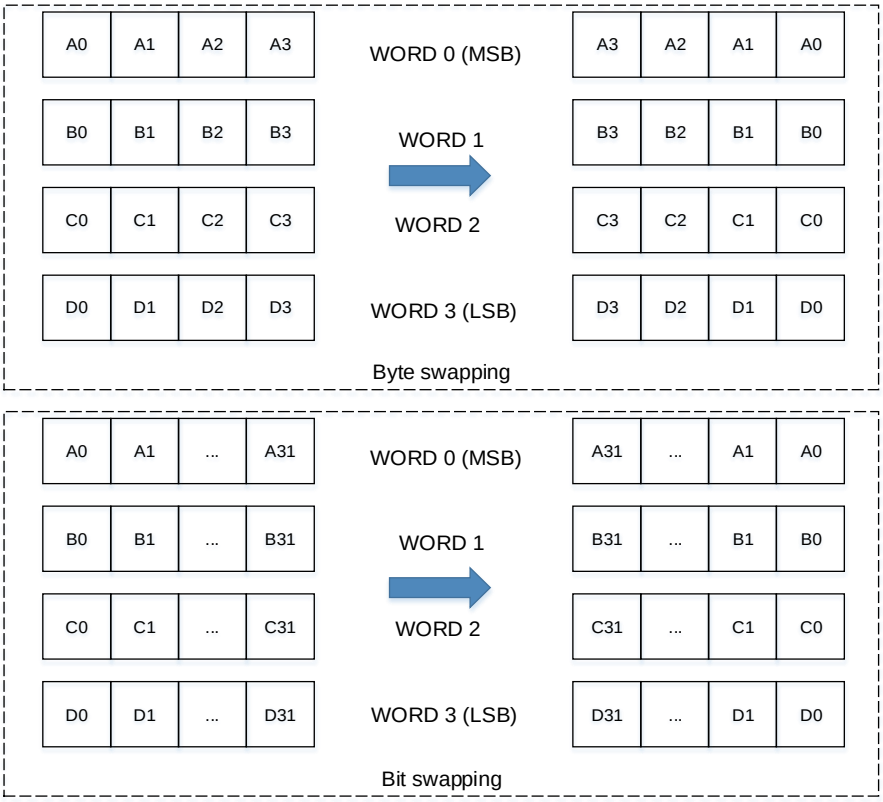

14.4. HAU core

The hash acceleration unit is used to compute condensed information of input messages with secure hash algorithms. The digest result has a length of 160 / 224 / 256 / 128 bits for a message up to (2^{64}-1) bits computed by SHA-1, SHA-224, SHA256 and MD5 algorithms respectively. It can be used to generate or verify the signature of a message with a higher efficiency because of the much simpler of the information.

A message which need to be processed in the HAU should be considered as bit information. And the length is the number of bits of the message. The information security is ensured because that, to find the original message using the digest is computationally impossible and, the result will be completely different with any change to the input message.

Figure 14-3. HAU block diagram

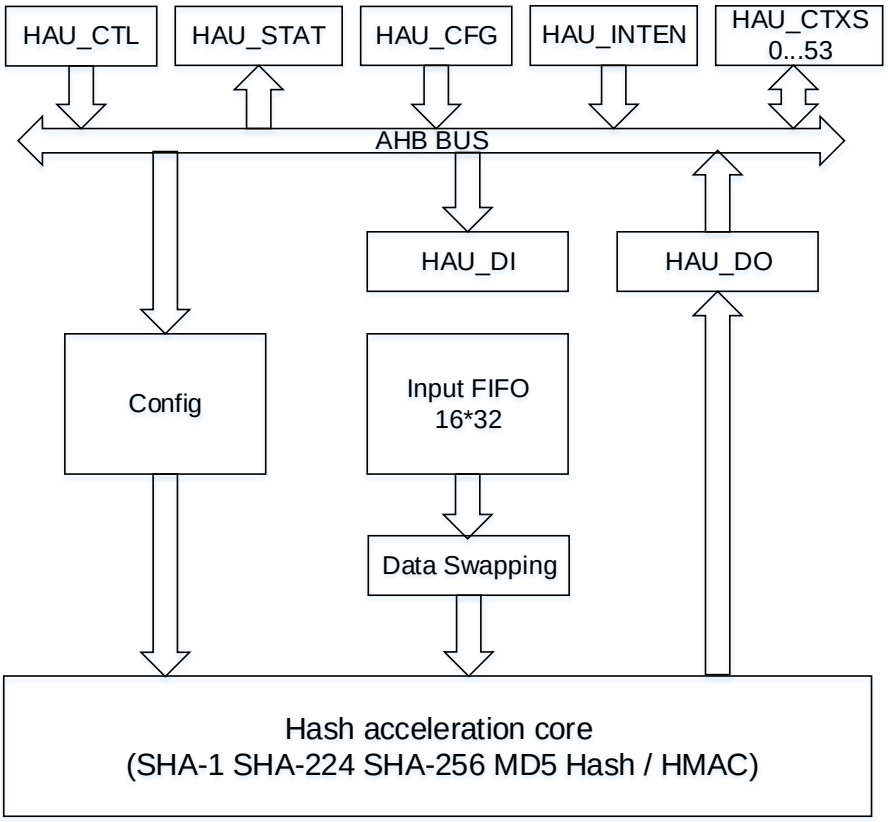

14.4.1. Automatic data padding

The input message should be padded first so that the number of bits in the input of the HAU core can be an integral multiple of 512. First of all, a “1” is added to follow the last bit of the input message, and then several “0” should be padded to ensure the result modulo 512 is 448, at last, a 64-bit length information of input is added.

After the message padding is correctly performed, the VBL bits in the HAU_CFG register is configured as the 64-bit length value above, and CALEN bit in the HAU_CFG register can be

set 1 to start the calculation of the digest of the last block.

Data Padding Example: The input message is “HAU”, which ASCII hexadecimal code is:

484155

Then the VBL bits in the HAU_CFG register is set as decimal 24 because of the valid bit length. A “1” is added at bit location 24 then, and several “0” are padded so that the result modulo 512 is 448, the hexadecimal result is as follows:

48415580 00000000 00000000 00000000

00000000 00000000 00000000 00000000

00000000 00000000 00000000 00000000

00000000 00000000

After that, a 64-bit length information of the input message is padded, which hexadecimal value is 18, and the final result will be:

48415580 00000000 00000000 00000000

00000000 00000000 00000000 00000000

00000000 00000000 00000000 00000000

00000000 00000000 00000000 00000018

14.4.2. Digest computing

After data padding, for each block calculation of HAU, 512 bits are written into the HAU core by DMA or CPU. To start the processing of the HAU core, the peripheral must obtain the information as to whether the HAU_DI register contains the last bits of the message or not. This can be confirmed with the status of the input FIFO and the HAU_DI register.

When DMA is used to transfer data:

The status of the block transfer is automatically interpreted with the information from the DMA controller. And padding and digest computation are performed automatically as if CALEN bit in the HAU_CFG register is set as 1.

Note: If hash message is large files and multiple DMA transfers are needed, then MDS bit should be set as 1. And the VBL bits need to be set before the transfer. The CALEN bit is not set automatically after an intermediate DMA transfer completed. Only when the last DMA transfer is processing, the MDS bit is cleared so that the CALEN bit is automatically set after data transferring.

Otherwise, the MDS bit is set as 0. And the CALEN bit is set automatically after a DMA transfer. Also, VBL bits need to set before the DMA transfer.

When CPU is used to transfer data without DMA:

- The intermediate block computing can be started when HAU_DI is filled with another new word of the next block.
- The last block computing can be started when CALEN bit in the HAU_CFG register is 1.

14.4.3. Hash mode

The hash mode is selected when the HMS bit in the HAU_CTL register is set as 0. A new digest calculation is started when the START bit in the HAU_CTL register is 1, and SHA-1, SHA-224, SHA-256 and MD5 mode computation is chosen by the ALGM bits in the HAU_CTL register.

After a message block of 512 bit has been received through the HAU_DI register and the input FIFO, the processor starts the calculation with the information from DMA or the status of the CALEN bit.

The results can be finally read from the HAU_DO0...7 registers.

14.4.4. HMAC mode

HMAC mode is used for message authentication with a unique key chosen by the user. More information about the HMAC specifications please refer to “HMAC: keyed-hashing for message authentication, H. Krawczyk, M. Bellare, R. Canetti, February 1997”.

The HMAC algorithm can be represented as:

HMAC(input) = HASH[((key | opad) XOR 0x5c) | HASH(((key | ipad) XOR 0x36) | input)]

where ipad and opad are used to extend the key to 512 bits with several ‘0’ and ‘1’ is the concatenation operator.

There are four different phases in the HMAC mode:

1. Configure the HMS bit in the HAU_CTL register as 1 and set the ALGM bits for the desired algorithm. If the key size is longer than 64 bytes, then the KLM bit in the HAU_CTL register should also be set. After that, start the HAU core by setting the START bit.
2. The key is used as the input message to complete the calculation in HASH mode.
3. The new key used for the inner hush function is elaborated when the last word is accessed and computation has started.
4. After the first hash round, HAU core starts to receive the key for the outer hash function, usually, the outer hash function uses the same new key as the inner hash function. And when the last word of the key is entered and computation starts, the results are available in the HAU_DO registers.

14.5. HAU suspended mode

It is possible to suspend HASH or HMAC operation to perform a high-prior task first, then after

the high-prior task is finished, resume the suspended operation.

When suspending the current task, it is necessary to save the context of the current task from registers to memory, and then the task can be resumed by restoring the context from memory to the HAU registers.

The following steps can be performed to complete the HAU process of the suspended data blocks.

14.5.1. Transfer data by CPU

1. Stop the current data transmission and calculation. Wait for BUSY = 0, and wait for DIF = 1 when NWIF[3:0] is larger than 0 (do not wait for DIF = 1 when NWIF[3:0] is 0).Only when no data block is processing, users can save context.
2. Save the configuration. Save the content of HAU_INTEN, HAU_CFG, HAU_CTL, HAU_CTXS0 to HAU_CTXS37 (HAU_CTXS0 to HAU_CTXS53 when HMAC operation is processing) registers to memory.
3. Configure and process the new message.
4. Restore the process before. Restore the content from memory to HAU_INTEN, HAU_CFG and HAU_CTL registers.
5. Resume the message calculation. Set START bit of HAU_CTL register to 1, to restart a new message digest calculation.
6. Resume the previous core state. Restore the content from memory to HAU_CTXS0 ~ HAU_CTXS37 (HAU_CTXS0 ~ HAU_CTXS53 when HMAC operation is to be resumed) registers.
7. Continue the operation from where it suspended before.

14.5.2. Transfer data by DMA

1. Wait for BUSY = 0, then if the CCF bit of HAU_STAT register is set, the proceeding context switch is no longer need, otherwise wait for BUSY = 1 again.
2. Stop the current data transfer. Disable DMA data transmission, then clear DMAE bit of HAU_CTL register to disable DMA request.
3. Save the current configuration. Wait for BUSY = 0, then if the CCF bit of HAU_STAT register is set, the proceeding context switch is no longer need, otherwise save the content of HAU_INTEN, HAU_CFG, HAU_CTL, HAU_CTXS0 to HAU_CTXS37 (HAU_CTXS0 to HAU_CTXS53 when HMAC operation is processing) registers to memory.
4. Configure and process the new message.
5. Restore the process before. Restore the content from memory to HAU_INTEN, HAU_CFG and HAU_CTL registers.
6. Resume DMA channel transmission. Reconfigure the DMA channel to transfer data.
7. Resume the message calculation. Set START bit of HAU_CTL register to 1, to restart a new message digest calculation.
8. Resume the previous core state. Restore the content from memory to HAU_CTXS0 ~

HAU_CTXS37 (HAU_CTXS0 ~ HAU_CTXS53 when HMAC operation is to be resumed) registers.

9. Set DMAE bit of HAU_CTL register to 1, continue the operation from where it suspended before.

Note: If the value of NWIF[3:0] bits of HAU_CTL register is 0, it means the context switch occurs between two data blocks, at the time when the previous block is completely processed, and the next block has not been pushed into input FIFO, so there is no need to save and restore HAU_CTXS22 ~ HAU_CTXS37 registers.

14.6. HAU interrupt

There are two types of interrupt registers in HAU, which are both in HAU_STAT register. In HAU, the interrupt is used to indicate the situation of the input FIFO and the status of whether the digest calculation is completed.

Any of interrupts can be enabled or disabled by configuring the HAU interrupt enable register HAU_INTEN. Value 1 of the register bits enable the interrupts.

14.6.1. Input FIFO interrupt

When the processing of data pushed in the input FIFO is completed, then DIF is asserted. If input FIFO interrupt is enabled, when DIF is asserted, input FIFO interrupt will be asserted.

14.6.2. Calculation completion interrupt

When the digest calculation is finished, then CCF is asserted. If calculation completion interrupt is enabled, when CCF is asserted, calculation completion interrupt will be asserted.

14.7. Register definition

HAU base address: 0x4802 1400

14.7.1. Control register (HAU_CTL)

Address offset: 0x00

Reset value: 0x0000 0000

This register has to be accessed by word (32-bit).

31	30	29	28	27	26	25	24	23	22	21	20	19	18	17	16
Reserved													ALGM[1]	Reserved	KLM
													rw		rw

15	14	13	12	11	10	9	8	7	6	5	4	3	2	1	0
Reserved		MDS	DINE	NWIF[3:0]				ALGM[0]	HMS	DATAM[1:0]		DMAE	START	Reserved	
		rw	r	r				rw	rw	rw		rw	w		

Bits	Fields	Descriptions
31:19	Reserved	Must be kept at reset value.
18	ALGM[1]	Algorithm selection bit 1
17	Reserved	Must be kept at reset value.
16	KLM	Key length mode 0: Key length ≤ 64 bytes 1: Key length > 64 bytes **Note:** This bit must be changed when no computation is processing.
15:14	Reserved	Must be kept at reset value.
13	MDS	Multiple DMA Selection Set this bit if hash message is large files and multiple DMA transfers are needed. 0: Single DMA transfers needed and CALEN bit is automatically set at the end of a DMA transfer 1: Multiple DMA transfers needed and CALEN bit is not automatically set at the end of a DMA transfer
12	DINE	DI register not empty 0: The DI register is empty 1: The DI register is not empty **Note:** This bit is cleared when START bit or CALEN bit is set as 1.
11:8	NWIF[3:0]	Number of words in the input FIFO **Note:** These bits are cleared when START bit set or a digest calculation starts (CALEN bit is set as 1, or DMA end of transfer)

7	ALGM[0]	Algorithm selection bit 0 This bit and bit 18 of CTL are written by software to select the SHA-1, SHA-224, SHA256 or the MD5 algorithm: 00: Select SHA-1 algorithm 01: Select MD5 algorithm 10: Select SHA224 algorithm 11: Select SHA256 algorithm
6	HMS	HAU mode selection, must be changed when no computation is processing 0: HASH mode selected 1: HMAC mode selected. If the key length is longer than 64 bytes, then KLM bit must also be set
5:4	DATAM[1:0]	Data type mode Defines the format of the data entered into the HAU_DI register: 00: No swapping. The data written to HAU_DI is direct write to FIFO without swapping. 01: Half-word swapping. The data written into HAU_DI need half-word swapping before write to FIFO. 10: Bytes swapping. The data written into HAU_DI need bytes swapping before write to FIFO. 11: Bit swapping. The data written into HAU_DI need bytes swapping before write to FIFO.
3	DMAE	DMA enable 0: DMA disabled 1: DMA enabled **Note:** 1. This bit is cleared when transferring the last data of the message, but not cleared because of START. 2. When DMA is transferring, writing 0 to this bit will not stop the current transfer until the transfer is completed or START is set as 1.
2	START	Start the digest calculation 1: Start the digest of a new message 0: No effect **Note:** Reading this bit always returns 0.
1:0	Reserved	Must be kept at reset value.

14.7.2. Data input register (HAU_DI)

Address offset: 0x04

Reset value: 0x0000 0000

The data input register is used to transfer message with 512-bit blocks into the input FIFO for processing. Any new write operation to this register will be extended while the digest calculation is in process until it has been finished.

This register has to be accessed by word (32-bit).

31	30	29	28	27	26	25	24	23	22	21	20	19	18	17	16
DI[31:16]															
rw															

15	14	13	12	11	10	9	8	7	6	5	4	3	2	1	0
DI[15:0]															
rw															

Bits	Fields	Descriptions
31:0	DI[31:0]	Message data input When write to these registers, the current content pushed to IN FIFO and new value updates. When read, returns the current content.

14.7.3. Configuration register (HAU_CFG)

Address offset: 0x08

Reset value: 0x0000 0000

This register has to be accessed by word (32-bit).

31	30	29	28	27	26	25	24	23	22	21	20	19	18	17	16
Reserved															

15	14	13	12	11	10	9	8	7	6	5	4	3	2	1	0
Reserved							CALEN	Reserved			VBL[4:0]				
							w				rw				

Bits	Fields	Descriptions
31:9	Reserved	Must be kept at reset value.
8	CALEN	Digest calculation enable 0: No calculation 1: Start data padding with VBL prepared previously. Start the calculation of the last digest **Note:** Reading this bit always returns 0.
7:5	Reserved	Must be kept at reset value.
4:0	VBL[4:0]	Valid bits length in the last word 0x00: All 32 bits of the last data written to HAU_DI after data swapping are valid 0x01: Only bit [31] of the last data written to HAU_DI after data swapping are valid 0x02: Only bits [31:30] of the last data written to HAU_DI after data swapping are valid 0x03: Only bits [31:29] of the last data written to HAU_DI after data swapping are valid ...

0x1F: Only bits [31:1] of the last data written to HAU_DI after data swapping are valid

Note: These bits must be configured before setting the CALEN bit.

14.7.4. Data output register (HAU_DO0..7)

Address offset: 0x0C
Reset value: 0x0000 0000

The data output registers are read only registers. They are used to receive results from the output FIFO. And they are reset by the START bit. Any read access when calculating will be extended until the calculation is completed.

In SHA-1 mode, HAU_DO0…4 are used.

In MD5 mode, HAU_DO0…3 are used.

In SHA-224 mode, HAU_DO0…6 are used.

In SHA-256 mode, HAU_DO0…7 are used.

HAU_DO0

Address offset: 0x0C and 0x310
Reset value: 0x0000 0000

These registers have to be accessed by word (32-bit).

31	30	29	28	27	26	25	24	23	22	21	20	19	18	17	16
DO0[31:16]															
r															

15	14	13	12	11	10	9	8	7	6	5	4	3	2	1	0
DO0[15:0]															
r															

HAU_DO1

Address offset: 0x10 and 0x314
Reset value: 0x0000 0000

These registers have to be accessed by word (32-bit).

31	30	29	28	27	26	25	24	23	22	21	20	19	18	17	16
DO1[31:16]															
r															

15	14	13	12	11	10	9	8	7	6	5	4	3	2	1	0
DO1[15:0]															
r															

HAU_DO2

Address offset: 0x14 and 0x318

Reset value: 0x0000 0000

These registers have to be accessed by word (32-bit).

31	30	29	28	27	26	25	24	23	22	21	20	19	18	17	16
DO2[31:16]															
r															

15	14	13	12	11	10	9	8	7	6	5	4	3	2	1	0
DO2[15:0]															
r															

HAU_DO3

Address offset: 0x18 and 0x31C

Reset value: 0x0000 0000

These registers have to be accessed by word (32-bit).

31	30	29	28	27	26	25	24	23	22	21	20	19	18	17	16
DO3[31:16]															
r															

15	14	13	12	11	10	9	8	7	6	5	4	3	2	1	0
DO3[15:0]															
r															

HAU_DO4

Address offset: 0x1C and 0x320

Reset value: 0x0000 0000

These registers have to be accessed by word (32-bit).

31	30	29	28	27	26	25	24	23	22	21	20	19	18	17	16
DO4[31:16]															
r															

15	14	13	12	11	10	9	8	7	6	5	4	3	2	1	0
DO4[15:0]															
r															

HAU_DO5

Address offset: 0x324

Reset value: 0x0000 0000

These registers have to be accessed by word (32-bit).

31	30	29	28	27	26	25	24	23	22	21	20	19	18	17	16
DO5[31:16]															
r															

15	14	13	12	11	10	9	8	7	6	5	4	3	2	1	0
DO5[15:0]															
r															

HAU_DO6

Address offset: 0x328

Reset value: 0x0000 0000

These registers have to be accessed by word (32-bit).

31	30	29	28	27	26	25	24	23	22	21	20	19	18	17	16
DO6[31:16]															
r															

15	14	13	12	11	10	9	8	7	6	5	4	3	2	1	0
DO6[15:0]															
r															

HAU_DO7

Address offset: 0x32C

Reset value: 0x0000 0000

These registers have to be accessed by word (32-bit).

31	30	29	28	27	26	25	24	23	22	21	20	19	18	17	16
DO7[31:16]															
r															

15	14	13	12	11	10	9	8	7	6	5	4	3	2	1	0
DO7[15:0]															
r															

Bits	Fields	Descriptions
31:0	DO0..7[31:0]	Message digest result of hash algorithm

14.7.5. Interrupt enable register (HAU_INTEN)

Address offset: 0x20

Reset value: 0x0000 0000

This register has to be accessed by word (32-bit).

31	30	29	28	27	26	25	24	23	22	21	20	19	18	17	16
Reserved															

15	14	13	12	11	10	9	8	7	6	5	4	3	2	1	0
Reserved														CCIE	DIIE
														rw	rw

Bits	Fields	Descriptions
31:2	Reserved	Must be kept at reset value.
1	CCIE	Calculation completion interrupt enable 0: Calculation completion interrupt is disabled 1: Calculation completion interrupt is enabled
0	DIIE	Data input interrupt enable 0: Data input interrupt is disabled 1: Data input interrupt is enabled

14.7.6. Status and flag register (HAU_STAT)

Address offset: 0x24

Reset value: 0x0000 0001

This register has to be accessed by word (32-bit).

31	30	29	28	27	26	25	24	23	22	21	20	19	18	17	16
Reserved															

15	14	13	12	11	10	9	8	7	6	5	4	3	2	1	0
Reserved												BUSY	DMAS	CCF	DIF
												r	r	rc_w0	rc_w0

Bits	Fields	Descriptions
31:4	Reserved	Must be kept at reset value.
3	BUSY	Busy bit 0: No processing 1: Data block is in process
2	DMAS	DMA status 0: DMA is disabled (DMAE = 0) and no transfer is processing 1: DMA is enabled (DMAE = 1) or a transfer is processing
1	CCF	Digest calculation completion flag 0: Digest calculation is not completed 1: Digest calculation is completed
0	DIF	Data input flag 0: A data is written to data input register 1: A data processing is completed (only the data in input FIFO will be processed)

14.7.7. Context switch register x (HAU_CTXSx) (x = 0...53)

Address offset: 0xF8 + 0x04 × x, (x = 0...53)

Reset value: 0x0000 0002 when x = 0, 0x0000 0000 when x = 1 to 53.

This register has to be accessed by word (32-bit).

31	30	29	28	27	26	25	24	23	22	21	20	19	18	17	16
CTXx[31:16]															
rw															

15	14	13	12	11	10	9	8	7	6	5	4	3	2	1	0
CTXx[15:0]															
rw															

Bits	Fields	Descriptions
31:0	CTXx[31:0]	The complete internal status of the HAU core. Read and save the register data when a high-priority task is coming to be processed, and restore the saved data back to the registers to resume the suspended processing.

15. Trigonometric Math Unit (TMU)

15.1. Overview

The Trigonometric Math Unit (TMU) is a fully configurable block that execute common trigonometric and arithmetic operations. The TMU can reduce the burden of CPU, and it is usually used in motor control, signal processing and many other applications.

The TMU can be used to calculate total 10 kinds of functions. The input / output data meet q1.31 or q1.15 fixed point format.

15.2. Characteristics

- 10 kinds of functions.
- Interrupt and DMA requests.
- The fixed point format is configurable.
- Programmable precision.
- CORDIC-algorithm core: circular system and hyperbolic system, rotation pattern and vectoring pattern.

15.3. Block diagram

Figure 15-1. TMU block diagram provides details of the internal configuration of the TMU.

Figure 15-1. TMU block diagram

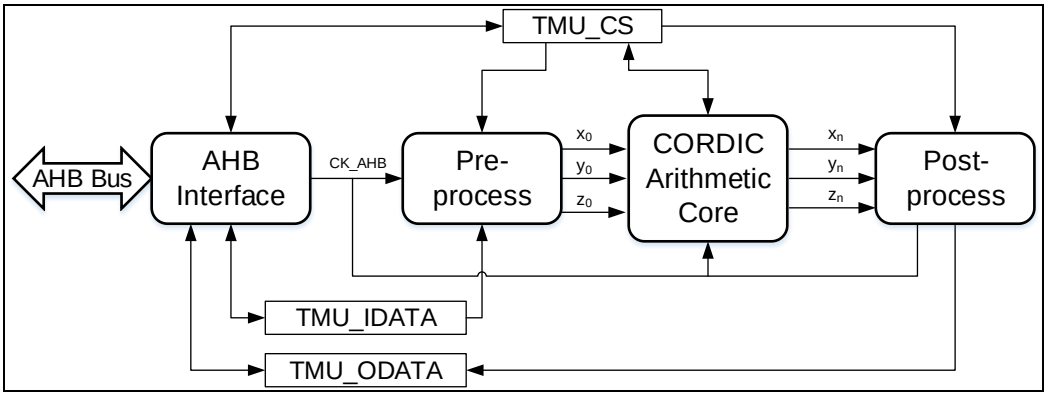

The Pre-process module converts the contents in the TMU_IDATA register to obtain the initial data (x_0,y_0,z_0) required by the CORDIC-arithmetic core. The contents of the TMU_IDATA register are in the format q1.31 or q1.15.

After the initial data (x_0,y_0,z_0) is input to the CORDIC-algorithm core, it is iterated and calculated to obtain the (x_n,y_n,z_n) . The CORDIC-algorithm core supports circular system and hyperbolic system, and each system supports rotation pattern and vectoring pattern.

The Post-process module converts and scales the data (x_n,y_n,z_n) and writes the processed results into TMU_ODATA register. The contents of the TMU_ODATA register are in q1.31 or q1.15 format.

15.4. Function overview

15.4.1. Data format and configuration

The input and output data of TMU module are fixed point signed integer format (q1.31 and q1.15 format).

In q1.31 format, the 31 bit is sign bit and 0~30 bits are fractional bits. The value range is [-1,1-2^{-31}], corresponding to [0x80000000,0x7FFFFFFF].

In q1.15 format, the 15 bit is sign bit and 0~14 bits are fractional bits. The value range is [-1,1-2^{-15}], corresponding to [0x8000,0x7FFF].

The IWITH bit in TMU_CS register is used to configure the fixed point format of the input data. Some modes (for example mode 0,m*sin(θ)) require two input datas, while some modes (for example mode 5, cosh(x)) require only one input data. The INUM bit in TMU_CS register is used to configure the number of input data. Detailed configuration refer to ***Table 15-1. Input data configuration***.

Note: When the input data is configured in q1.15 format, the TMU_IDATA register only needs to be written once, the first input data in the low half word, the second input data in the high half word. If the mode only needs one input data, only the low half word is used, and the high half word is not used.

Table 15-1. Input data configuration

IWIDTH bit	INUM bit	Fixed format	Write operation to TMU_IDATA
0	0	q1.31	Only one write operation
0	1	q1.31	Two successive write operation
1	0	q1.15	Only one write operation
1	1	q1.15	Not available

The OWITH bit in TMU_CS register is used to configure the fixed point format of the output data. Some modes (for example mode 0,m*sin(θ)) have two output datas, while some modes (for example mode 8, ln(x)) have only one output data. The ONUM bit in TMU_CS register is used to configure the number of output data. Detailed configuration refer to ***Table 15-2. Output data configuration***.

Note: When the output data is configured in q1.15 format, the TMU_IDATA register only needs to be read once, the first output data in the low half word, the second output data in the high half word. If the mode only needs one output data, only the low half word is used, and the high half word is not used.

Table 15-2. Output data configuration

OWIDTH bit	ONUM bit	Fixed format	read operation to TMU_ODATA
0	0	q1.31	Only one read operation
0	1	q1.31	Two successive read operation
1	0	q1.15	Only one read operation
1	1	q1.15	Not available

15.4.2. Mode configuration

The MODE[3:0] bit-field in TMU_CS register is used to configure the mode of the CORDIC-algorithm core. Different modes use different systems (circular or hyperbolic) and different patterns (rotation or vectoring). Detailed configuration refer to ***Table 15-3. TMU mode configuration***. Since the input and output data are in q1.31 or q1.15 format, some modes need to scale the actual input parameters. The FACTOR [2:0] bit-field in the TMU_CS register is used to configure the scaling factor.

Table 15-3. TMU mode configuration

Mode	The first input data	The second input data	The first output data	The second output data	System and Pattern
Mode 0	θ	m	m* cos(θ)	m*sin(θ)	Circular, Rotation
Mode 1	θ	m	m*sin(θ)	m* cos(θ)	Circular, Rotation
Mode 2	x	y	atan2 (y,x)	$\sqrt{x^2+y^2}$	Circular, Vectoring
Mode 3	x	y	$\sqrt{x^2+y^2}$	atan2 (y,x)	Circular, Vectoring
Mode 4	x	None	$\tan^{-1}(x)$	None	Circular, Vectoring
Mode 5	x	None	cosh (x)	sinh (x)	Hyperbolic, Rotation
Mode 6	x	None	sinh (x)	cosh (x)	Hyperbolic, Rotation
Mode 7	x	None	$\tanh^{-1}(x)$	None	Hyperbolic, Vectoring
Mode 8	x	None	ln (x)	None	Hyperbolic, Vectoring
Mode 9	x	None	$\sqrt{x}$	None	Hyperbolic, Vectoring

Although TMU algorithm can only calculate a small number of functions directly, more functions can be obtained indirectly. For example, $e^x = \sinh(x) + \cosh(x)$.

Mode 0: m* cos(θ)

Mode 0 calculates the cosine of an angle. This mode take two input datas and generate two ouput datas. Detailed information refer to ***Table 15-4. Mode 0 description***.

Table 15-4. Mode 0 description

Parameter	Range	Description
First input data	$\frac{\theta}{\pi} \in [-1,1)$	The angle θ in radians range from –π to π. The θ must be divide by π in software to convert it to the range [-1,1), and then it is written to TMU_IDATA register according to the format of q1.31 or q1.15.
Second input data	$m \in [0,1)$	If 0≤m<1, it is written to TMU_IDATA register according to the format of q1.31 or q1.15. if m≥1, a scaling must be applied in software to convert it to the range [-1,1), and then it is written to TMU_IDATA register according to the format of q1.31 or q1.15.
First output data	$m*\cos(\theta) \in [-1,1)$	If the previous software has shrunk m, the output data needs to be scaled up to obtain the real result.
Second output data	$m*\sin(\theta) \in [-1,1)$	If the previous software has shrunk m, the output data needs to be scaled up to obtain the real result.
FACTOR[2:0]	Not available	keep at reset value 3'b000.

Note: If $m > 1$, the scale is optional.

For example, calculating $100*\cos\left(\frac{\pi}{2}\right)$. The input and output are q1.15 format. The steps to calculate the function are as follows:

1. Software processes the first input parameter $\frac{\pi}{2}$. Angle $\frac{\pi}{2}$ is divided by π: $\frac{\frac{\pi}{2}}{\pi}$=0.5, 0.5 is 0x4000 in q1.15 format.
2. Software processes the second input parameter m. Modulus 100 is divided by 128: $\frac{100}{128}$=0.78125. 0.78125 is 0x6400 in q1.15 format.
3. The first input data 0x4000 is written into TMU_IDATA.
4. The second input data 0x6400 is written into TMU_IDATA. Then the TMU calculation starts.
5. When the ENDF flag is set to 1, reading the TMU_ODATA register can get the first output data: $y_1=\frac{100}{128}*\cos\left(\frac{\pi}{2}\right)$, reading the TMU_ODATA register again can get the second output data: $y_2=\frac{100}{128}*\sin\left(\frac{\pi}{2}\right)$. The output data is q1.15 format.
6. Software processes the result. Since the previous software has shrunk m by 128, the output data needs to be scaled up by 128 to obtain the real result: $100*\cos\left(\frac{\pi}{2}\right)=128*y_1$.

The scaling 128 is used for the input and output data in this example. Of course, other scaling, such as 101, can also be used.

Mode 1: m*sin(θ)

Mode 1 calculates the sine of an angle. This mode take two input datas and generate two ouput datas. Detailed information refer to ***Table 15-5. Mode 1 description***.

Table 15-5. Mode 1 description

Parameter	Range	Description
First input data	$\frac{\theta}{\pi} \in [-1,1)$	The angle θ in radians range from −π to π. The θ must be divide by π in software to convert it to the range [-1,1), and then it is written to TMU_IDATA register according to the format of q1.31 or q1.15.
Second input data	m ∈ [0,1)	If 0≤m<1, it is written to TMU_IDATA register according to the format of q1.31 or q1.15. if m≥1, a scaling must be applied in software to convert it to the range [-1,1), and then it is written to TMU_IDATA register according to the format of q1.31 or q1.15.
First output data	m* sin(θ) ∈[-1,1)	If the previous software has shrunk m, the output data needs to be scaled up to obtain the real result.
Second output data	m* $\cos(\theta)$ ∈[-1,1)	If the previous software has shrunk m, the output data needs to be scaled up to obtain the real result.
FACTOR[2:0]	Not available	keep at reset value 3'b000.

Note: If $m > 1$, the scale is optional.

For example, calculating $100 * \sin\left(\frac{\pi}{2}\right)$. The input and output are q1.15 format. The steps to calculate the function are as follows:

1. Software processes the first input parameter $\frac{\pi}{2}$. Angle $\frac{\pi}{2}$ is divided by π: $\frac{\frac{\pi}{2}}{\pi}$=0.5, 0.5 is 0x4000 in q1.15 format.
2. Software processes the second input parameter m. Modulus 100 is divided by 128: $\frac{100}{128}$=0.78125. 0.78125 is 0x6400 in q1.15 format.
3. The first input data 0x4000 is written into TMU_IDATA.
4. The second input data 0x6400 is written into TMU_IDATA. Then the TMU calculation starts.
5. When the ENDF flag is set to 1, reading the TMU_ODATA register can get the first output data: $y_1 = \frac{100}{128} * \sin\left(\frac{\pi}{2}\right)$, and reading the TMU_ODATA register again can get the second output data:$y_2 = \frac{100}{128} * \cos\left(\frac{\pi}{2}\right)$. The output data is q1.15 format.
6. Software processes the result. Since the previous software has shrunk m by 128, the output data needs to be scaled up by 128 to obtain the real result: $100 * \sin\left(\frac{\pi}{2}\right) = 128 * y_1$.

The scaling 128 is used for the input and output data in this example. Of course, other scaling, such as 101, can also be used.

Mode 2: phase= atan2 (y,x)

Mode 2 calculates the atan2(y,x) of a vector (x,y). This mode take two input datas and generate two ouput datas. Detailed information refer to ***Table 15-6. Mode 2 description***.

Table 15-6. Mode 2 description

Parameter	Range	Description
First input data	x∈[-1,1)	The abscissa value in Cartesian coordinate system. If x≥1 or x<-1, software scaling is required.
Second input data	y∈[-1,1)	The ordinate value in Cartesian coordinate system. If y≥1 or y<-1, software scaling is required.
First output data	θ∈[-1,1)	Angle, [-1,1) corresponding [-π,π). The output data is multiplied by π to get the real angle value.
Second output data	m∈[0,1)	Modulus, $m=\sqrt{x^2+y^2}$. If x and y have been scaled before, the modulus needs to be scaled equally.
FACTOR[2:0]	Not available	keep at reset value 3'b000.

Note:

1. As long as one of x and y is out of the range [-1,1), x and y need to be scaled at the same scale at the same time, not only one. In this way, the angle corresponding to the coordinates before and after scaling can be kept same.
2. When $\sqrt{x^2+y^2}\geq 1$, the modulus m is only saturated to the maximum value of the fixed-point format. Before scaling x and y in the same scale, the scaling factor should be considered to avoid saturation of modulus.

For example, calculating θ=atan(5,80). The input and output are q1.15 format. The steps to calculate the function are as follows:

1. Software processes the input parameters (5,80). (5,80) is divided by 128. The result is (0.0390625,0.625). The q1.15 format is (0x0500,0x5000).
2. The first input data 0x0500 is written into TMU_IDATA.
3. The second input data 0x5000 is written into TMU_IDATA. Then the TMU calculation starts.
4. When the ENDF flag is set to 1, reading the TMU_ODATA register can get the first output data θ, and reading the TMU_ODATA register again can get the second output data modulus m. The output data is q1.15 format.
5. Software processes the result. The first output data angle θ multiply π to get the real radian. Since the previous software has shrunk the input datas by 128, the second output data m needs to be scaled up by 128 to obtain the real modulus.

The scaling 128 is used for the input datas and the modulus in this example. Of course, other scaling, such as 81, can also be used.

Mode 3: modulus=$\sqrt{x^2+y^2}$

Mode 3 calculates the modulus $\sqrt{x^2+y^2}$ of a vector (x,y). This mode take two input datas and generate two ouput datas. Detailed information refer to ***Table 15-7. Mode 3 description***.

Table 15-7. Mode 3 description

Parameter	Range	Description
First input data	x∈[-1,1)	The abscissa value in Cartesian coordinate system. If x≥1 or x<-1, software scaling is required.
Second input data	y∈[-1,1)	The ordinate value in Cartesian coordinate system. If x≥1 or x<-1, software scaling is required.
First output data	m∈[0,1)	Modulus, m=$\sqrt{x^2+y^2}$. If x and y have been scaled before, the modulus needs to be scaled equally.
Second output data	θ∈[-1,1)	Angle, [-1,1) corresponding [-π,π). The output data is multiplied by π to get the real angle value.
FACTOR[2:0]	Not available	Keep at reset value 3'b000.

Note:

1. As long as one of x and y is out of the range [-1,1), x and y need to be scaled at the same scale at the same time, not only one. In this way, the angle corresponding to the coordinates before and after scaling can be kept same.
2. When $\sqrt{x^2+y^2}$≥1, the modulus m is only saturated to the maximum value of the fixed-point format($1-2^{-15}$ or $1-2^{-31}$). Before scaling x and y in the same scale, the scaling factor should be considered to avoid saturation of modulus.

For example, calculating $\sqrt{5^2+80^2}$. The input and output are q1.15 format. The steps to calculate the function are as follows:

1. Software processes the input parameters (5,80). (5,80) is divided by 128. The result is (0.0390625,0.625). The q1.15 format is (0x0500,0x5000).
2. The first input data 0x0500 is written into TMU_IDATA.
3. The second input data 0x5000 is written into TMU_IDATA. Then the TMU calculation starts.
4. When the ENDF flag is set to 1, reading the TMU_ODATA register can get the first output data modulus m, and reading the TMU_ODATA register again can get the second output data θ. The output data is q1.15 format.
5. Software processes the result. Since the previous software has shrunk the input datas by 128, the first output data m needs to be scaled up by 128 to obtain the real modulus. The second output data angle θ multiply π to get the real radian.

The scaling 128 is used for the input datas and the modulus in this example. Of course, other scaling, such as 81, can also be used.

Mode 4: $\tan^{-1}(x)$

Mode 4 calculates the $\tan^{-1}(x)$. This mode take one input data and generate one ouput data. Detailed information refer to ***Table 15-8. Mode 4 description***.

Table 15-8. Mode 4 description

Parameter	Range	Description
Input data	$\frac{x}{2^f} \in [-1,1)$	If $x \in [-1,1)$, the software does not need to process it, and the scaling factor is 2^0(FACTOR[2:0]=3'b000). If x is out of the range of [-1,1), it need to be scaled in software to ensure that $-1 \le \frac{x}{2^f} < 1$. Then write f to FACTOR[2:0] bit-field, and write the scaled data $\frac{x}{2^f}$ to TMU_IDATA in q1.15 or q1.31 format.
Output data	$\frac{\theta}{2^f} \in [-1,1)$	Angle, [-1,1) corresponding [-π,π). The output data is multiplied by π and 2^f to get the real angle value θ.
FACTOR[2:0]	$f \in [0,7]$	The bit-field FACTOR[2:0] is configured as f

For example, calculating $\tan^{-1}(100)$. The input and output are q1.15 format. The steps to calculate the function are as follows:

1. Software processes the input parameter 100. 100 is divided by 128 (f=7=3'b111). The result is 0.78125 and the q1.15 format is 0x6400.
2. The scaling factor f=3'b111 is written into FACTOR[2:0] bit-field in TMU_CS register.
3. The input data 0x6400 is written into TMU_IDATA. Then the TMU calculation starts.
4. When the ENDF flag is set to 1, reading the TMU_ODATA register can get the output data $\frac{\theta}{2^7}$. The output data is q1.15 format.
5. Software processes the result. The output data $\frac{\theta}{2^7}$ needs to be multiplied by π and 2^7 to get the real radian.

Mode 5: cosh (x)

Mode 5 calculates calculates the hyperbolic cosine of a hyperbolic angle x. This mode take one input data and generate two ouput datas. Detailed information refer to ***Table 15-9. Mode 5 description***.

Table 15-9. Mode 5 description

Parameter	Range	Description
Input data	$\frac{x}{2} \in [-0.559,0.559]$	$x \in [-1.118,1.118]$, a scaling factor $\frac{1}{2}$ is applied in softwate. Then write $\frac{x}{2}$ to TMU_IDATA in q1.15 or q1.31 format.
First output data	$\frac{\cosh(x)}{2} \in [0.5,0.846]$	The output data is multiplied 2 to get the real hyperbolic cosine of a hyperbolic angle x.

Parameter	Range	Description
Second output data	$\frac{\sinh(x)}{2} \in [-0.683, 0.683]$	The output data is multiplied 2 to get the real hyperbolic sine of a hyperbolic angle x.
FACTOR[2:0]	1	The bit-field FACTOR[2:0] is configured as 3'b001

Note: The scaling factor FACTOR[2:0] must be 1.

For example, calculating $\cosh(1.0)$. The input and output are q1.15 format. The steps to calculate the function are as follows:

1. Software processes the input parameter 1.0. 1.0 is divided by 2 (f=3'b001). The result is 0.5 and the q1.15 format is 0x4000.
2. The scaling factor (f=3'b001) is written into FACTOR[2:0] bit-field in TMU_CS register.
3. The input data 0x4000 is written into TMU_IDATA. Then the TMU calculation starts.
4. When the ENDF flag is set to 1, reading the TMU_ODATA register can get the first output data: $y_1 = \frac{\cosh 1.0)}{2}$, and reading the TMU_ODATA register again can get the second output data:$y_2 = \frac{\sinh(1.0)}{2}$. The output data is q1.15 format.
5. Software processes the result. The two output datas are multiplied 2 to get the real hyperbolic cosine and sine of a hyperbolic angle 1.0.

Mode 6: sinh (x)

Mode 6 calculates calculates the hyperbolic sine of a hyperbolic angle x. This mode take one input data and generate two ouput datas. Detailed information refer to ***Table 15-10. Mode 6 description***.

Table 15-10. Mode 6 description

Parameter	Range	Description
Input data	$\frac{x}{2} \in [-0.559, 0.559]$	x∈[-1.118,1.118], a scaling factor $\frac{1}{2}$ is applied in softwate. Then write $\frac{x}{2}$ to TMU_IDATA in q1.15 or q1.31 format.
First output data	$\frac{\sinh(x)}{2} \in [-0.683, 0.683]$	The output data is multiplied 2 to get the real hyperbolic sine of a hyperbolic angle x.
Second output data	$\frac{\cosh(x)}{2} \in [0.5, 0.846]$	The output data is multiplied 2 to get the real hyperbolic cosine of a hyperbolic angle x.
FACTOR[2:0]	1	The bit-field FACTOR[2:0] is configured as 3'b001

Note: The scaling factor FACTOR[2:0] must be 1.

For example, calculating $\sinh(1.0)$. The input and output are q1.15 format. The steps to calculate the function are as follows:

1. Software processes the input parameter 1.0. 1.0 is divided by 2 (f=3'b001). The result is 0.5 and the q1.15 format is 0x4000.

2. The scaling factor f=3'b001 is written into FACTOR[2:0] bit-field in TMU_CS register.
3. The input data 0x4000 is written into TMU_IDATA. Then the TMU calculation starts.
4. When the ENDF flag is set to 1, reading the TMU_ODATA register can get the first output data: $y_1=\frac{\sinh(1.0)}{2}$, and reading the TMU_ODATA register again can get the second output data:$y_2=\frac{\cosh(1.0)}{2}$. The output data is q1.15 format.
5. Software processes the result. The two output datas are multiplied 2 to get the real hyperbolic cosine and sine of a hyperbolic angle 1.0.

Mode 7: $\tanh^{-1}(x)$

Mode 7 calculates calculates the hyperbolic arctangent of a hyperbolic angle x. This mode take one input data and generate one ouput data. Detailed information refer to ***Table 15-11. Mode 7 description***.

Table 15-11. Mode 7 description

Parameter	Range	Description
Input data	$\frac{x}{2}\in[-0.403,0.403]$	x∈[-0.806,0.806], a scaling factor $\frac{1}{2}$ is applied in softwate. Then write $\frac{x}{2}$ to TMU_IDATA in q1.15 or q1.31 format.
Output data	$\frac{\tanh^{-1}(x)}{2}\in[-0.559,0.559]$	The output data is multiplied 2 to get the real hyperbolic arctangent of a hyperbolic angle x.
FACTOR[2:0]	1	The bit-field FACTOR[2:0] is configured as 3'b001

Note: The scaling factor FACTOR[2:0] must be 1.

For example, calculating $\tanh^{-1}(0.5)$. The input and output are q1.15 format. The steps to calculate the function are as follows:

1. Software processes the input parameter 0.5. 0.5 is divided by 2 (f=3'b001). The result is 0.25 and the q1.15 format is 0x2000.
2. The scaling factor f=3'b001 is written into FACTOR[2:0] bit-field in TMU_CS register.
3. The input data 0x2000 is written into TMU_IDATA. Then the TMU calculation starts.
4. When the ENDF flag is set to 1, reading the TMU_ODATA register can get the output data: $y_1=\frac{\tanh^{-1}(0.5)}{2}$. The output data is q1.15 format.
5. Software processes the result. The output data is multiplied 2 to get the real hyperbolic arctangent of a hyperbolic angle 0.5.

Mode 8: ln (x)

Mode 8 calculates calculates the natural logarithm of the input parameter x. This mode take one input data and generate one ouput data. Detailed information refer to ***Table 15-12. Mode***

8 description.

Table 15-12. Mode 8 description

Parameter	Range	Description
Input data	$\frac{x}{2^f} \in [0.0535,0.875]$	x∈[0.107,9.35], a scaling factor 2^{-f} is applied in softwate to ensure that $\frac{x}{2^f}<(1-\frac{1}{2^f})$. Then write $\frac{x}{2^f}$ to TMU_IDATA in q1.15 or q1.31 format.
Output data	$\frac{\ln(x)}{2^{(f+1)}} \in [-0.558,0.137]$	The output data is multiplied $2^{(f+1)}$ to get the real ln (x).
FACTOR[2:0]	f∈[1,4]	The bit-field FACTOR[2:0] is configured as f

For example, calculating ln (8). The input and output are q1.15 format. The steps to calculate the function are as follows:

1. Software processes the input parameter 8. 8 is divided by 16 (f=3'b100). The result is 0.5 and the q1.15 format is 0x4000.
2. The scaling factor f=3'b100 is written into FACTOR[2:0] bit-field in TMU_CS register.
3. The input data 0x4000 is written into TMU_IDATA. Then the TMU calculation starts.
4. When the ENDF flag is set to 1, reading the TMU_ODATA register can get the output data: $y_1=\frac{\ln(x)}{2^{(4+1)}}$. The output data is q1.15 format.
5. Software processes the result. The output data is multiplied $2^{(4+1)}$ to get the real the natural logarithm of 8.

In order to ensure the accuracy of calculation, it is recommended to use the scaling factors in *Table 15-13. Recommended scaling factors in mode 8* for different inputs.

Table 15-13. Recommended scaling factors in mode 8

Input Parameter x range	FACTOR[2:0]	Input data x range
0.107≤x<1	1	[0.0535,0.5)
1≤x<3	2	[0.25,0.75)
3≤x<7	3	[0.375,0.875)
7≤x<9.35	4	[0.4375,0.584)

Mode 9: $\sqrt{x}$

Mode 9 calculates calculates the square root of the input parameter x. This mode take one input data and generate one ouput data. Detailed information refer to *Table 15-14. Mode 9 description*.

Table 15-14. Mode 9 description

Parameter	Range	Description
Input data	$\frac{x}{2^f} \in [0.027,0.875]$	x∈[0.027,2.34], a scaling factor 2^{-f} is applied in

Parameter	Range	Description
		softwate to ensure that $\frac{x}{2^f}$<(1-$\frac{1}{2^{f+2}}$). Then write $\frac{x}{2^f}$ to TMU_IDATA in q1.15 or q1.31 format.
Output data	$\frac{\sqrt{x}}{2^f}\in[0.04,1]$	The output data is multiplied 2^f to get the real $\sqrt{x}$.
FACTOR[2:0]	f∈[0,2]	The bit-field FACTOR[2:0] is configured as f

For example, calculating $\sqrt{2}$. The input and output are q1.15 format. The steps to calculate the function are as follows:

1. Software processes the input parameter 2. 2 is divided by 4 ($f = 3'b010$). The result is 0.5 and the q1.15 format is 0x4000.
2. The scaling factor $f = 3'b010$ is written into FACTOR[2:0] bit-field in TMU_CS register.
3. The input data 0x4000 is written into TMU_IDATA. Then the TMU calculation starts.
4. When the ENDF flag is set to 1, reading the TMU_ODATA register can get the output data: $y_1=\frac{\sqrt{2}}{2^2}$. The output data is q1.15 format.
5. Software processes the result. The output data is multiplied 2^2 to get the real value of $\sqrt{2}$.

In order to ensure the accuracy of calculation, it is recommended to use the scaling factors in *Table 15-15. Recommended scaling factors in mode 9* for different inputs

Table 15-15. Recommended scaling factors in mode 9

Input Parameter x range	FACTOR[2:0]	Input data x range
0.027<x<0.75	0	[0.027,0.75)
0.75≤x<1.75	1	[0.375,0.875)
1.75≤x<2.341	2	[0.4375,0.585)

15.4.3. TMU precision

Table 15-16. Precision vs. number of iterations

Mode	Number of iterations	Number of cycles	Max residual error(1)	
			q1.31 format	q1.15 format
Mode 0, Mode 1, Mode(2) 2, Mode(2) 3, Mode(4) 4	4	1	2^{-3}	2^{-3}
	8	2	2^{-7}	2^{-7}
	12	3	2^{-11}	2^{-11}
	16	4	2^{-15}	2^{-15}
	20	5	2^{-18}	2^{-16}
	24	6	2^{-19}	2^{-16}
Mode 5, Mode 6, Mode 7, Mode(3) 8	4	1	2^{-2}	2^{-2}
	8	2	2^{-6}	2^{-6}
	12	3	2^{-10}	2^{-10}

Mode	Number of iterations	Number of cycles	Max residual error[1]	
			q1.31 format	q1.15 format
	16	4	2^{-13}	2^{-13}
	20	5	2^{-17}	2^{-15}
	24	6	2^{-18}	2^{-15}
Mode[4] 9	4	1	2^{-7}	2^{-7}
	8	2	2^{-14}	2^{-14}
	12	3	2^{-19}	2^{-15}

1. Max residual error is the maximum error remaining after the given number of iterations, compared to the identical calculation performed in double precision floating point. An additional rounding error may be incurred, of up to 2^{-16} for q15 format or 2^{-20} for q31 format.
2. When the (x,y) are close to (0,0), the precision will sharply decrease.
3. FACTOR[2:0] = 1. If a higher scaling factor is used, the achievable precision is reduced proportionally.
4. FACTOR[2:0] = 0. If a higher scaling factor is used, the achievable precision is reduced proportionally.

15.4.4. TMU operation pending

If the TMU operation is ongoing, the further the contents written into TMU_IDATA register will be suspended. When the TMU operation completes (the result is read and the ENDF flag is cleared), if the number of suspended input data meets the configuration (defined in the suspended TMU_CS register), the TMU module will start a new TMU operation according to the pending configuration and data.

For example, if the configured TMU mode requires two 32-bit input data (IWIDTH = 0, INUM = 1), the TMU operation is started as sonn as two input data are written into the TMU_IDATA. If the second input data does not change in the next TMU operation, the INUM bit can be set to 0 at this time. After the previous TMU operation is completed, only one input data is written into TMU_IDATA. The second input data still uses the previous value in the later TMU operation as long as the TMU mode does not change.

Note: After a reset, the second input data is +1 (0x7FFFFFFF).

While an TMU operation is pending, the further contents written into TMU_IDATA or TMU_CS register will cover the original contents. The new TMU contents will be suspended, and the suspension of the original contents will be invalid.

15.4.5. Zero-overhead mode

After a TMU operation starts, the output data register can be read directly. And the bus will automatically insert the waiting cycle before the result is returned. The following steps can be followed:

1. Configure TMU_CS register as needed.
2. Start the TMU operation by written the input data into TMU_IDATA.
3. Configure the next TMU mode as required and write the input data into TMU_IDATA.
4. Read the result from the TMU_ODATA register. The waiting cycles are automatically inserted into the bus. After reading TMU_ODATA operation is completed, the suspended TMU operation will start automatically.
5. Go to step3.

15.4.6. Interrupt and DMA requests

When ENDF flag is set to 1, if the RIE bit in TMU_CS register is set to 1, an interrupt request is generated. After the ENDF flag is cleared to 0, the interrupt request is also cleared.

If the WDEN bit in TMU_CS register is set to 1 and no TMU operation is pending, DMA request is generated. The number of DMA request is depends on the INUM bit in TMU_CS register. If INUM is 0, only one DMA request is generated. If INUM is 1, two DMA requests are generated.

When ENDF flag is set to 1, if the RDEN bit in TMU_CS register is set to 1, DMA request is generated. The number of DMA request is depends on the ONUM bit in TMU_CS register. If ONUM is 0, only one DMA request is generated. If ONUM is 1, two DMA requests are generated.

15.5. Registers definition

TMU base address: 0x4001 0000

15.5.1. Control and status register (TMU_CS)

Address offset: 0x00
Reset value: 0x0000 0050

This register can be accessed by word(32-bit).

31	30	29	28	27	26	25	24	23	22	21	20	19	18	17	16
ENDF	Reserved								IWIDTH	OWIDTH	INUM	ONUM	WDEN	RDEN	RIE
r									rw	rw	rw	rw	rw	rw	rw

15	14	13	12	11	10	9	8	7	6	5	4	3	2	1	0
Reserved					FACTOR[2:0]			ITRTNUM[3:0]				MODE[3:0]			
					rw			rw				rw			

Bits	Fields	Descriptions
31	ENDF	End of TMU operation flag 0: No TMU operation or TMU operation is ongoing 1: TMU operation ends and the output data has been written into TMU_ODATA

		register. This bit is set by hardware when TMU operation ends and the output data has been written into TMU_ODATA register. This bit is cleared by reading the TMU_ODATA register (ONUM + 1) times. **Note:** During this bit is set, no new TMU operation is started.
30:23	Reserved	Must be kept at reset value.
22	IWIDTH	Width of input data 0: 32-bit 1: 16-bit This bit decide the data format for input data. If 32-bit is configured, the input data in q1.31 format should be written into TMU_IDATA register. If 16-bit is configured, the input data in q1.15 format should be written into TMU_IDATA register. The first input data is written into the lower half-word of TMU_IDATA register, and the second input data is written into the upper half-word of TMU_IDATA register.
21	OWIDTH	Width of output data 0: 32-bit 1: 16-bit This bit decide the data format for the output data of TMU operation. If 32-bit is configured, the TMU_ODATA contains the output data of TMU operation in q1.31 format. If 16-bit is configured, the TMU_ODATA contains the output data of TMU operation in q1.15 format. The the lower half-word of TMU_IDATA register contains the first output data, and the the upper half-word of TMU_IDATA register contains the second output data.
20	INUM	The number of times that the TMU_IDATA needs to be written 0: One 32-bit write operation. To start a new TMU operation, one 32-bit input data must written into TMU_IDATA register. 1: Two 32-bit write operation. To start a new TMU operation, two 32-bit input data must written into TMU_IDATA register. **Note**: When the format of input data is q1.15 (IWIDTH=1) and the TMU mode need only one input data (INUM=0), the upper half-word of TMU_IDATA register is unused.
19	ONUM	The number of times that the TMU_ODATA needs to be read 0: One 32-bit read operation. When TMU operation completes, only one 32-bit result is transferred into TMU_ODATA register. Read the TMU_ODATA register once to clear ENDF flag. 1: Two 32-bit read operation. When TMU operation completes, two 32-bit results are transferred into TMU_ODATA register. Read the TMU_ODATA register twice to clear ENDF flag.

		Note: When OWIDTH=1 (the format of output data is q1.15), only one 32-bit read is needed(ONUM=1).
18	WDEN	Enable DMA request to write TMU_IDATA 0: disabled. No DMA request is generated to write TMU_IDATA. 1: enabled. When no TMU operation is pending, the DMA request is generated.
17	RDEN	Enable DMA request to read TMU_ODATA 0: disabled. No DMA request is generated to read TMU_ODATA. 1: enabled. When ENDF is set, the DMA request is generated.
16	RIE	Enable interrupt request to read TMU_ODATA 0: disabled. No interrupt request is generated to read TMU_ODATA. 1: enabled. When ENDF is set, the interrupt request is generated.
15:11	Reserved	Must be kept at reset value.
10:8	FACTOR[2:0]	Scaling factor This bit-field defines the scaling factor: $2^{FACTOR[2:0]}$. 000: 2^0 001: 2^1 010: 2^2 … 110: 2^6 111: 2^7 When the actual input parameter exceeds the specified the input data range [-1,1), it is need to be divide by $2^{FACTOR[2:0]}$ and the output data is need to be multiplied by $2^{FACTOR[2:0]}$ to get the actual output result, details as follows: TMU_IDATA = the actual input parameter/$2^{FACTOR[2:0]}$ the actual output result=TMU_ODATA*$2^{FACTOR[2:0]}$. **Note:** 1. For mode8 and mode9, this bit field recommends some configurations for different parameters. For mode0, mode1, mode2 and mode3, this bit field is recommended to be configured as 3'b000. For mode5, mode6, and mode7, this bit field is recommended to be configured as 3'b001. 2. The input data(TMU_IDATA) and the output data(TMU_ODATA) are q1.31 or q1.15 format.
7:4	ITRTNUM[3:0]	Number of iterations This bit-field defines the number of iterations: ITRTNUM[3:0]*4. 0000: Reserved 0001: 4 iteration steps 0010: 8 iteration steps … 0110: 24 iteration steps 0111~1111: Reserved

		Note: the higher the number of iterations, the higher the accuracy.
3:0	MODE[3:0]	Mode of TMU operation 0000: mode0,m* cos(θ) 0001: mode1, m*sin(θ) 0010: mode2, phase= atan2 (y,x) 0011: mode3, modulus=$\sqrt{x^2+y^2}$ 0100: mode4, $\tan^{-1}$ (x) 0101: mode5, cosh (x) 0110: mode6, sinh (x) 0111: mode7, $\tanh^{-1}$ (x) 1000: mode8, ln (x) 1001: mode9, $\sqrt{x}$ 1010~1111: reserved **Note:** x, θ: the first input data y, m: the second input data

15.5.2. Input data register (TMU_IDATA)

Address offset: 0x04

Reset value: 0xXXXX XXXX

This register can be accessed by word(32-bit).

31	30	29	28	27	26	25	24	23	22	21	20	19	18	17	16
IDATA[31:16]															
w															

15	14	13	12	11	10	9	8	7	6	5	4	3	2	1	0
IDATA[15:0]															
w															

Bits	Fields	Descriptions
31:0	IDATA[31:0]	The input data The input data is written into this register. For details, refer to ***Table 15-1. Input data configuration***. **Note:** 1. When no TMU operation is is ongoing and the required number of arguments has been written, a new operation will be started automatically. 2. When the TMU operation is ongoing, the written data is suspended until the end of the TMU operation and the output data is read. During this period, if new input data is written, the previous suspension will be cancelled, and the new data will overwrite the previous data and be suspended.

15.5.3. Output data register (TMU_ODATA)

Address offset: 0x08

Reset value: 0x0000 0000

This register can be accessed by word(32-bit).

31	30	29	28	27	26	25	24	23	22	21	20	19	18	17	16
ODATA[31:16]															
r															

15	14	13	12	11	10	9	8	7	6	5	4	3	2	1	0
ODATA[15:0]															
r															

Bits	Fields	Descriptions
31:0	ODATA[31:0]	The output data When TMU operation ends, the result is transferred into this register. For details, refer to ***Table 15-2. Output data configuration***. **Note:** 1. When the ENDF bit is 1, the result of TMU operation can be obtained by reading the register. 2. When the read operation meeting the configuration is completed, the ENDF bit is cleared.

16. Direct memory access controller (DMA)

16.1. Overview

The direct memory access (DMA) controller provides a hardware method of transferring data between peripherals and/or memory without intervention from the MCU, thereby increasing system performance by off-loading the MCU from copying large amounts of data and avoiding frequent interrupts to serve peripherals needing more data or having available data.

Two AHB master interfaces and eight four-word depth 32-bit width FIFOs are presented in each DMA controller, which achieves a high DMA transmission performance. There are 16 independent channels in the DMA controller (8 for DMA0 and 8 for DMA1). Each channel is assigned a specific or multiple target peripheral devices for memory access request management. Two arbiters respectively for memory and peripheral are implemented inside to handle the priority among DMA requests.

Both the DMA controller and the Cortex®-M7 core implement data access through the system bus. An arbitration mechanism is implemented to solve the competition between these two masters. When the same peripheral is targeted, the MCU access will be suspended for some specific bus cycles. A round-robin scheduling algorithm is utilized in the bus matrix to guaranty at least half the bandwidth to the MCU.

16.2. Characteristics

- Two AHB master interface for transferring data, and one AHB slave interface for programming DMA.
- 16 channels (8 for DMA0 and 8 for DMA1) and each channel are configurable.
- Support independent single, 4, 8, 16-beat incrementing burst memory and peripheral transfer.
- Support switch-buffer transmission between peripheral and memory.
- Software DMA channel priority (low, medium, high, ultra high) and hardware DMA channel priority (DMA channel 0 has the highest priority and DMA channel 7 has the lowest priority).
- Support independent 8, 16, 32-bit memory and peripheral transfer.
- Support independent fixed and increasing address generation algorithm of memory and peripheral.
- Support circular transfer mode.
- Support three transfer modes:
  - Read from memory and write to peripheral.
  - Read from peripheral and write to memory.
  - Read from memory and write to memory.
- Support two data processing modes by use of the four-word depth 32-bit width FIFOs:

- Multi-data mode: Pack/Unpack data when memory transfer width are different from peripheral transfer width.
- Single-data mode: Read data from source when FIFO is empty and wirte data to destination when one data has been pushed into FIFO.

- One separate interrupt per channel with five types of event flags.
- Support interrupt enable and clear.

16.3. Function overview

16.3.1. Block diagram

Figure 16-1. Block diagram of DMA

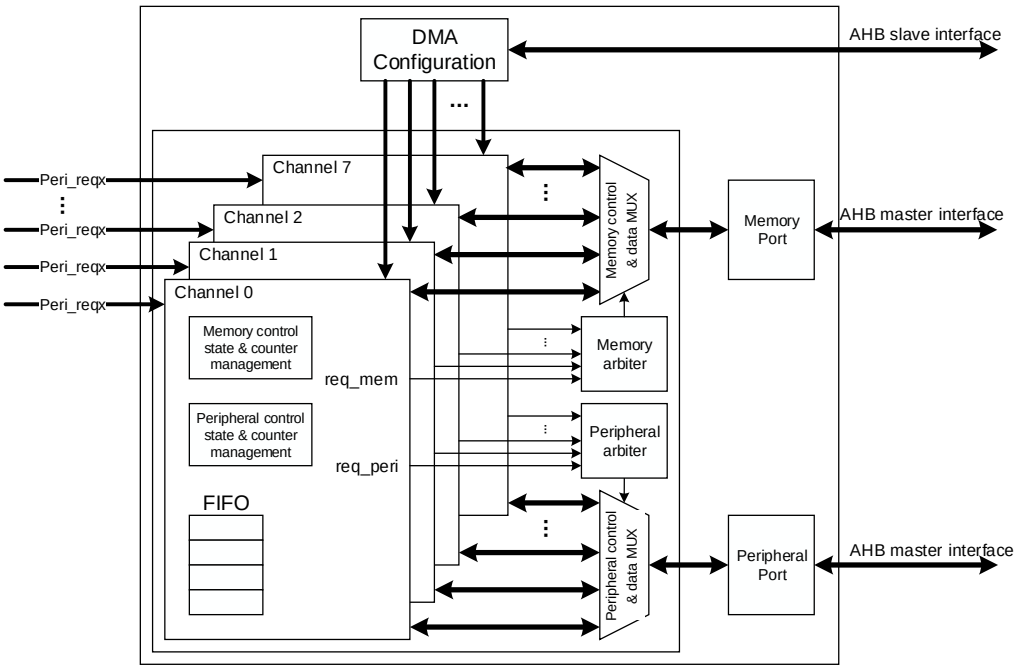

As shown in ***Figure 16-1. Block diagram of DMA***, a DMA controller consists of four main parts:

- DMA configuration through AHB slave interface.
- Data access through two AHB master interfaces respectively for memory access and peripheral access.
- Two arbiters inside to manage multiple peripheral requests coming at the same time.
- Channel data management to control data packing/unpacking and counting.

The DMA controller transfers data from one address to another without CPU intervention. It supports multiple data sizes, burst types, address generation algorithm, priority levels and several transfer modes to allow for flexible application by configuring the corresponding bits in DMA registers. All the DMA registers can be 32-bit configured through AHB slave interface.

Three transfer modes are supported, including peripheral-to-memory, memory-to-peripheral

and memory-to-memory, which is determined by the TM bits in the DMA_CHxCTL register, as listed in ***Table 16-1. Transfer mode***.

Table 16-1. Transfer mode

Transfer mode	TM[1:0]	Source	Destination
Peripheral to memory	00	DMA_CHxPADDR	DMA_CHxM0ADDR/ DMA_CHxM1ADDR
Memory to peripheral	01	DMA_CHxM0ADDR/ DMA_CHxM1ADDR	DMA_CHxPADDR
Memory to memory	10	DMA_CHxPADDR	DMA_CHxM0ADDR/ DMA_CHxM1ADDR

Note:

1. The MBS bit in DMA_CHxCTL register determines which is selected as the memory buffer address in DMA_CHxM0ADDR and DMA_CHxM1ADDR register. For more information, refer to section ***Switch-buffer mode***.

2. The TM bits in DMA_CHxCTL register are forbidden to configure to 0b11, or the channel will be automatically disabled.

Figure 16-2. Data stream for three transfer modes

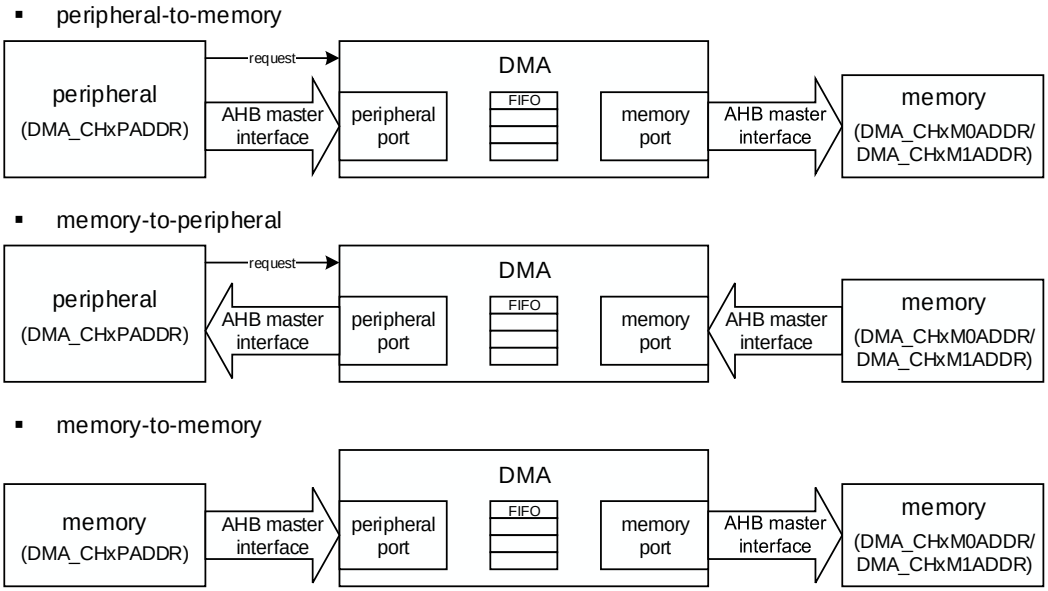

As shown in ***Figure 16-2. Data stream for three transfer modes***, two AHB master interfaces are implemented in each DMA respectively for memory and peripheral.

- Memory to peripheral: read data from memory through AHB master interface for memory, and write data to peripheral through AHB master interface for peripheral.
- Peripheral to memory: read data from peripheral through AHB master interface for peripheral, and write data to memory through AHB master interface for memory.
- Memory to memory: read data from memory through AHB master interface for peripheral, and write data to another memory through AHB master interface for memory.

16.3.2. Peripheral handshake

To ensure a well-organized and efficient data transfer, a handshake mechanism is introduced between the DMA and peripherals, including a request signal and a acknowledge signal:

- Request signal asserted by peripheral to DMA controller, indicating that the peripheral is ready to transmit or receive data.
- Acknowledge signal responded by DMA to peripheral, indicating that the DMA controller has initiated an AHB command to access the peripheral.

Figure 16-3. Handshake mechanism shows how the handshake mechanism works between the DMA controller and peripherals.

Figure 16-3. Handshake mechanism

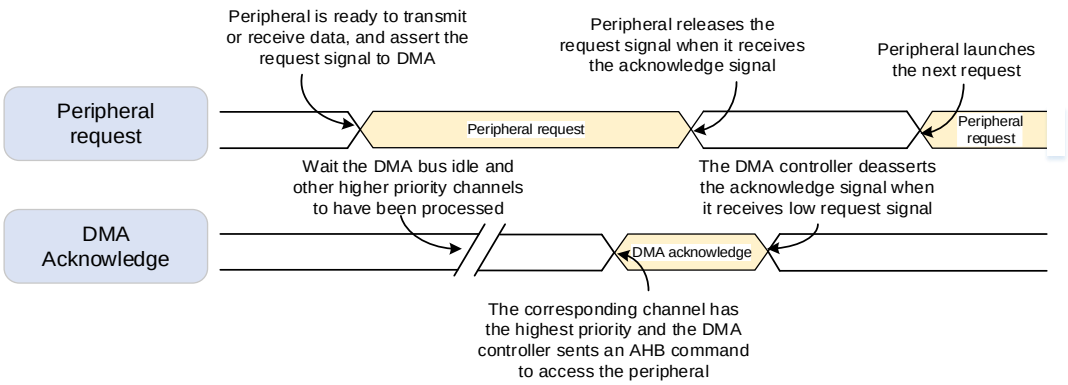

16.3.3. Data process

Arbitration

Two arbiters are implemented in each DMA respectively for memory and peripheral port. When two or more requests are received at the same time, the arbiter determines which channel is selected to respond according to the following priority rules:

- Software priority: Four levels, including low, medium, high and ultra high by configuring the PRIO bits in the DMA_CHxCTL register.
- Hardtware priority: For channels with equal software priority level, priority is given to the channel with lower channel number. For example, when channel 0 and channel 2 are configured with the same software priority, the priority of channel 0 is higher than that of channel 2.

Transfer width, burst and counter

Transfer width

PWIDTH and MWIDTH in the DMA_CHxCTL register indicate the data width of a peripheral and memory transfer seperately. The DMA supports 8-bit, 16-bit and 32-bit transfer width. In

multi-data mode, if PWIDTH is not equal to MWIDTH, the DMA can automatically packs/unpacks data to achieve an integrated and correct data transfer operation. In single-data mode, MWIDTH is automatically locked as PWIDTH by hardware immediately after enable the DMA channel.

Transfer burst type

PBURST and MBURST in the DMA_CHxCTL register indicate the burst type of a peripheral and memory transfer seperately. The DMA supports single burst, 4-beat, 8-beat and 16-beat incrementing burst for peripheral port and memory port. In single-data mode, only single burst type is supported and PBURST and MBURST are automatically locked as '00' by hardware immediately after enable the DMA channel.

In peripheral-to-memory or memory-to-peripheral mode, if PBURST is different from '00', DMA responses a increasing burst transfer of 4, 8, 16-beat based on the PBURST bits for each peripheral request. If the remaining bytes number of data item to be transferred is less than the bytes number needed for a burst transfer, the remaining data items are transferred in single transaction.

AMBA protocol specifies that bursts must not cross a 1KB address boundary, or a transfer error will be responsed to the master. In each DMA, the peripheral burst transfer crossing a 1KB address boundary is decomposed to 4, 8 or 16 single transactions depend on the PBURST bits, as the same as the memory burst transfer.

Transfer counter

The CNT bits in the DMA_CHxCNT register specifies how many data to be transmitted on the channel and must be configured before the CHEN bit is enabled. During the transmission, the CNT bits indicate the remaining number of data items to be transferred.

The CNT bits are related to peripheral transfer width, the number of data bytes to be transferred is the CNT bits multiplied by the byte number of the peripheral transfer width. For example, if the PWIDTH bits are equal to '10', and the number of data bytes to be transferred is CNT×4. The CNT bits is decreased by 1 when a single or a beat of the burst peripheral transfer (the source memory transfer in the memory-to-memory mode) has been completed even if the transfer mode is peripheral-to-memory or memory-to-memory.

When configuring the CNT bits, the following rules must be respected to guarantee a good DMA operation:

1. If the circular mode is disabled by clearing the CMEN bit in the DMA_CHxCTL register, the rules to configure the CNT bits in the DMA_CHxCNT register based on the transfer width are listed in the ***Table 16-2. CNT configuration***. The number of data bytes must be an integer multiple of the memory transfer width to guarantee an integrated single memory transfer.

Note: The number of data bytes does not need to be an interger multiple of the bytes number of a memory burst transfer or a peripheral burst number if the PBURST or/and MBURST bits are not equal to '00'. The remaining data that not enough for a burst transfer can be divided

into single transfer automatically.

Table 16-2. CNT configuration

PWIDTH	MWIDTH	CNT
8-bit	16-bit	Multiple of 2
8-bit	32-bit	Multiple of 4
16-bit	32-bit	Multiple of 2
Others		Any value

1. If the circular mode is enabled by setting the CMEN bit in the DMA_CHxCTL register. The number of data bytes must be an integer multiple of the byte number of a peripheral burst transfer and a memory burst transfer to gurantee an integrated memory and peripheral burst transfer:

- $CNT/PBURST_beats$ must be an integer.
- $(CNT \times PWIDTH_bytes)/(MBURST_beats \times MWIDTH_bytes)$ must be an integer.
  - PWIDTH_bytes is the byte number of the peripheral transfer width, 1 for 8-bit, 2 for 16-bit and 4 for 32-bit.
  - PBURST_beats is the beat number of a peripheral burst transfer, 1 for single burst, 4 for INCR4 (4-beat incrementing burst), 8 for INCR8 (8-beat incrementing burst) and 16 for INCR16 (16-beat incrementing burst).
  - MWIDTH_bytes is the byte number of the peripheral transfer width, 1 for 8-bit, 2 for 16-bit and 4 for 32-bit.
  - MBURST_beats is the beat number of a peripheral burst transfer, 1 for single burst, 4 for INCR4, 8 for INCR8 and 16 for INCR16.

For example:

1. If PWIDTH is 16-bit, PBURST is INCR4, MWIDTH is 8-bit and MBURST is INCR16, $CNT/4$ and $(CNT\times2)/(1\times16)$ must be an integer, so the CNT bits must be configured to the multiple of 8.
2. If the If PWIDTH is 8-bit, PBURST is INCR16, MWIDTH is 16-bit and MBURST is INCR4, $CNT/16$ and $(CNT\times1)/(2\times4)$ must be an integer, so the CNT bits must be configured to the multiple of 16.

Note: When the switch-buffer mode is enabled by setting the SBMEN bit in the DMA_CHxCTL register, the circular mode is enabled automatically by hardware, and the above rules must also be respected.

FIFO

A four-word depth FIFO is implemented as a data buffer for each DMA channel. Data reading from the source address is stored in the FIFO temporarily and transmitted to the destination through the destination port. Two data processing modes are supported depend on the FIFO

configuration, including single-data mode and multi-data mode. When the transfer mode is memory-to-memory, only multi-data mode is supported to implement the DMA data processing.

Multi-data mode

The multi-data mode is selected by configuring the MDMEN bit in the DMA_CHxFCTL register to '1'.

In this mode, the DMA responds the source request when there is enough FIFO space for a source transfer, pushing the data reading from the source address into the FIFO. If the destination is a peripheral, the DMA responds the peripheral request when there is enough FIFO data for a peripheral burst transfer. If the memory is configured as the destination, the FIFO counter critical value configured in the FCCV bits of the DMA_CHxFCTL register controls the memory data processing. Only when the FIFO counter is reached the critical value, the data in the FIFO are entirely poped and written into the memory address.

To gurantee a good DMA behavior, the FIFO counter critical value (FCCV bits in the DMA_CHxFCTL register) must be an integer multiple of a memory burst transfer to ensure there is enough data for memory burst transfers. The configuration rules of the FIFO counter critical value depending on memory transfer width and memory burst types are listed in ***Table 16-3. FIFO counter critical value configuration rules***.

Table 16-3. FIFO counter critical value configuration rules

MWIDTH	MBURST	FIFO counter critical value			
		1-word	2-word	3-word	4-word
8-bit	single	4 single transactions	8 single transactions	12 single transactions	16 single transactions
	INCR4	1 burst transaction	2 burst transactions	3 burst transactions	4 burst transactions
	INCR8	ERROR	1 burst transaction	ERROR	2 burst transactions
	INCR16	ERROR	ERROR	ERROR	1 burst transaction
16-bit	single	2 single transactions	4 single transactions	6 single transactions	8 single transactions
	INCR4	ERROR	1 burst transaction	ERROR	2 burst transactions
	INCR8	ERROR	ERROR	ERROR	1 burst transaction
	INCR16	ERROR	ERROR	ERROR	ERROR
32-bit	single	1 single transaction	2 single transactions	3 single transactions	4 single transactions
	INCR4	ERROR	ERROR	ERROR	1 burst transactions
	INCR8	ERROR	ERROR	ERROR	ERROR
	INCR16	ERROR	ERROR	ERROR	ERROR

Note: When the transfer mode is peripheral-to-memory, if the PBURST_beats×PWIDTH_bytes = 16, the FIFO counter critical value must not be equal to '2b10'. When receiving a peripheral request, DMA initiates a peripheral burst transfer to

entirely fill the FIFO. Then DMA lanches memory burst transfers to pop three words from the FIFO depending on the FIFO counter critical value and a word is still remained in the FIFO. There is no enough space for a peripheral burst transfer and the FIFO counter critical value is not reached, which makes DMA transfer frozen.

Single-data mode

The single-data mode is selected by configuring the MDMEN bit in the DMA_CHxFCTL register to '0'. In this mode, only single transfer is supported to implement the DMA data access, and the FIFO counter critical value configured in the FCCV bits of the DMA_CHxFCTL register has no meaning.

In single-data mode, DMA responds the source request only when the FIFO is empty, pushing the data reading from the source address into the FIFO whatever the source transfer width is. When the FIFO is not empty, DMA responds the destination request, poping the data from the FIFO and writing it to the destination address.

Pack/Unpack

In single-data mode, the MWIDTH bits are equal to the PWIDTH bits by force, data packing/unpacking is not needed.

In multi-data mode, the independent PWIDTH and MWIDTH bits configuration are supported for flexible DMA transfer. When the PWIDTH bits and the MWIDTH bits are not equal, DMA reading access and writing access are executed in different transfer width, and DMA packs/unpacks the data automatically. In DMA transfer operation, only little-endian addressing for both memory and peripheral is supported.

Suppose the CNT bits are 16, the PWIDTH bits are equal to '00', and both PNAGA and MNAGA are set. The DMA transfer operations for different MWIDTH are shown in the ***Figure 16-4. Data packing/unpacking when PWIDTH = '00'***.

Figure 16-4. Data packing/unpacking when PWIDTH = '00'

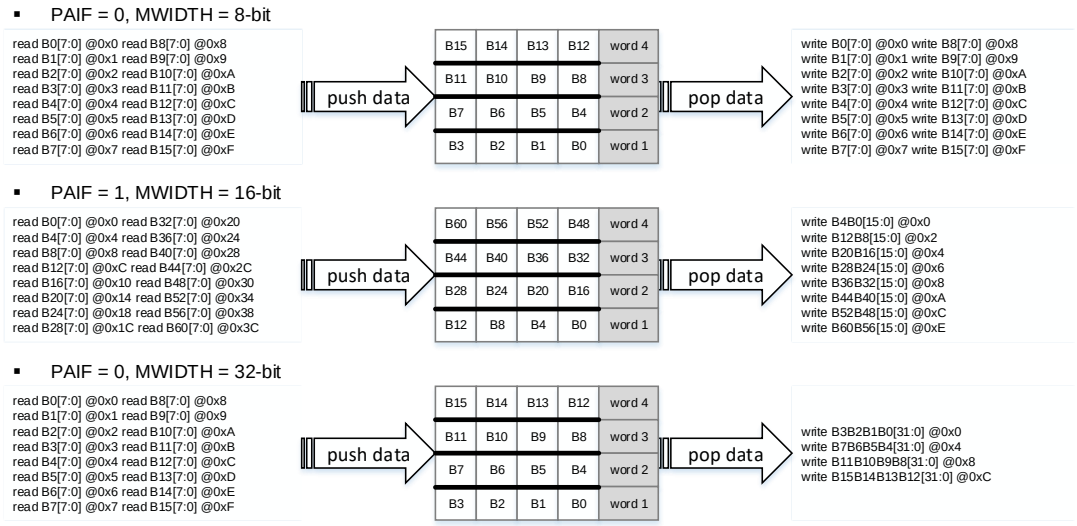

Suppose the CNT bits are 8, the PWIDTH bits are equal to '01', and both PNAGA and MNAGA are set. The DMA transfer operations for different MWIDTH are shown in the ***Figure 16-5. Data packing/unpacking when PWIDTH = '01'***.

Figure 16-5. Data packing/unpacking when PWIDTH = '01'

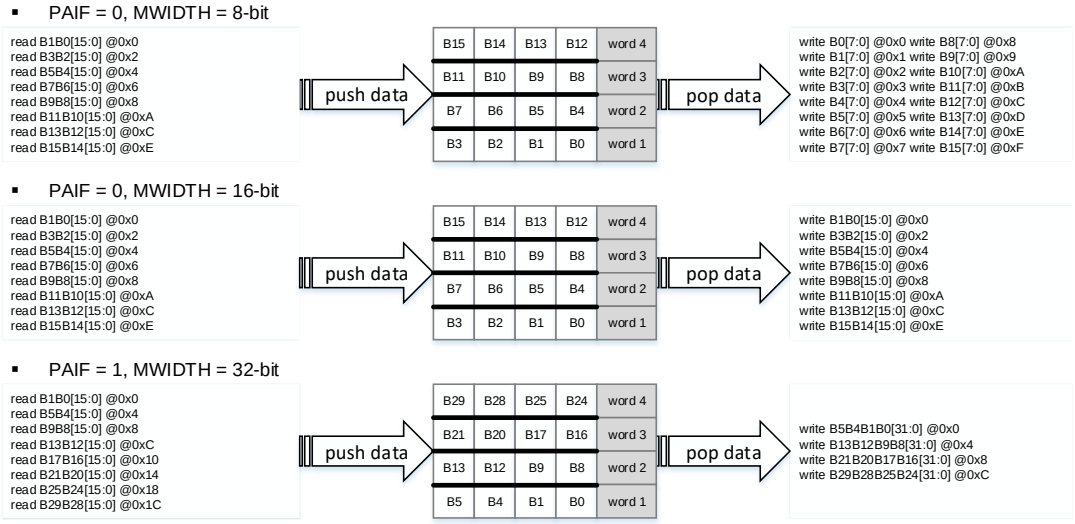

Suppose DMA_CHxCNT is 4, the PWIDTH bits are equal to '10', and both PNAGA and MNAGA are set. The DMA transfer operations for different MWIDTH are shown in the ***Figure 16-6. Data packing/unpacking when PWIDTH = '10'***.

Figure 16-6. Data packing/unpacking when PWIDTH = '10'

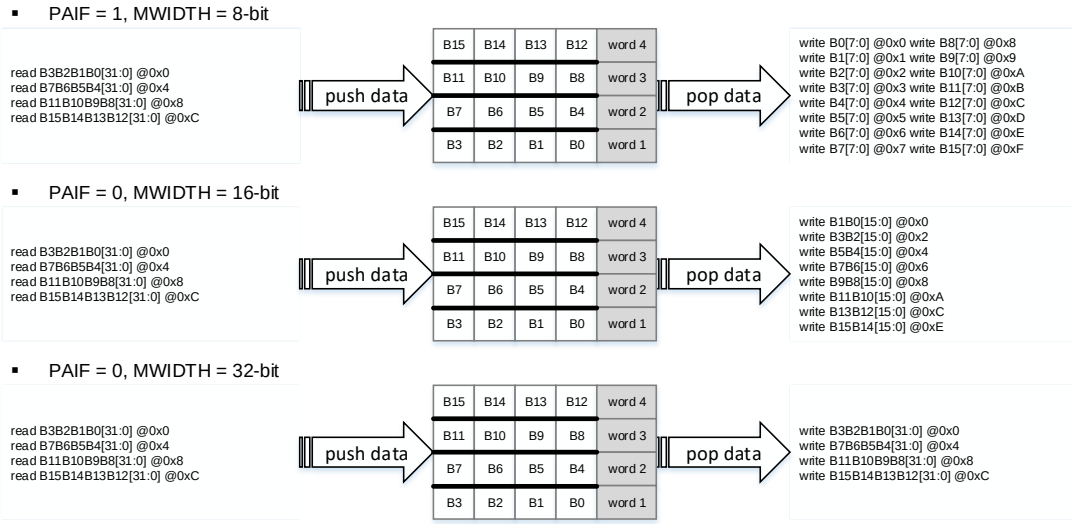

16.3.4. Address generation

Two kinds of address generation algorithm are implemented independently for memory and peripheral, including the fixed mode and the increased mode. The PNAGA and MNAGA bit in the DMA_CHxCTL register are used to configure the next address generation algorithm of peripheral and memory.

In the fixed mode, the next address is always equal to the base address configured in the

base address registers (DMA_CHxPADDR, DMA_CHxM0ADDR, and DMA_CHxM1ADDR).

In the increasing mode, the next address is euqal to the current address plus 1 or 2 or 4, depending on the transfer data width. In Multi-data mode with PBURST in the DMA_CHxCTL register is '00', if PAIF in the DMA_CHxCTL register is enabled, the next peripheral address increment is fixed to 4, and has nothing to do with the peripheral transfer data width. The PAIF has no meaning to the memory address generation.

Note: If PAIF in the DMA_CHxCTL register is enable, the peripheral base address configured in the DMA_CHxPADDR register must be 32-bit alignment.

16.3.5. Circular mode

Circular mode is implemented to handle continue peripheral requests. The CMEN bit in DMA_CHxCTL register is used to enable/disable the circular mode. Circular mode is available only when DMA controls the transfer flow.

In circular mode, the CNT bits are automatically reloaded with the pre-programmed value and the full transfer finish flag is asserted at the end of every DMA transfer. DMA can always respond the peripheral request until a transfer error is detected or the CHEN bit in the DMA_CHxCTL register is cleared.

16.3.6. Switch-buffer mode

Similar to circular mode, switch-buffer mode is also implemented to handle continues peripheral requests. The SBMEN bit in the DMA_CHxCTL register is used to enable/disable the switch-buffer mode. When the switch-buffer mode is enabled, the circular mode is automatically enabled immediately after the channel is enabled. Switch-buffer mode is only available when the transfer mode is peripheral-to-memory or memory-to-peripheral. When the transfer mode is memory-to-memory, the switch-buffer mode is automatically disabled immediately after the channel is enabled.

Switch-buffer mode is supported with two memory buffers and the base address of the two memory buffers are separately configured in the DMA_CHxM0ADDR and DMA_CHxM1ADDR register. In switch-buffer mode, the DMA memory pointer switches from the current memory buffer to another at the end of every DMA transfer. During the DMA transmission, the memory buffer not being processed by DMA can be accessed by other AHB masters. In switch-buffer mode, the base address of the memory buffer not accessed by DMA can be updated even if the channel is enabled.

The MBS bit in the DMA_CHxCTL register is configured to select which memory buffer is accessed by DMA at the first DMA transfer before the channel is enabled. In switch-buffer mode, this bit switches automatically between '0' and '1' at the end of every DMA transfer, and can be used as a flag indicating the current memory buffer accessed by DMA during the transmission. The DMA operation of switch-buffer mode are shown in ***Figure 16-7. DMA operation of switch-buffer mode***.

Figure 16-7. DMA operation of switch-buffer mode

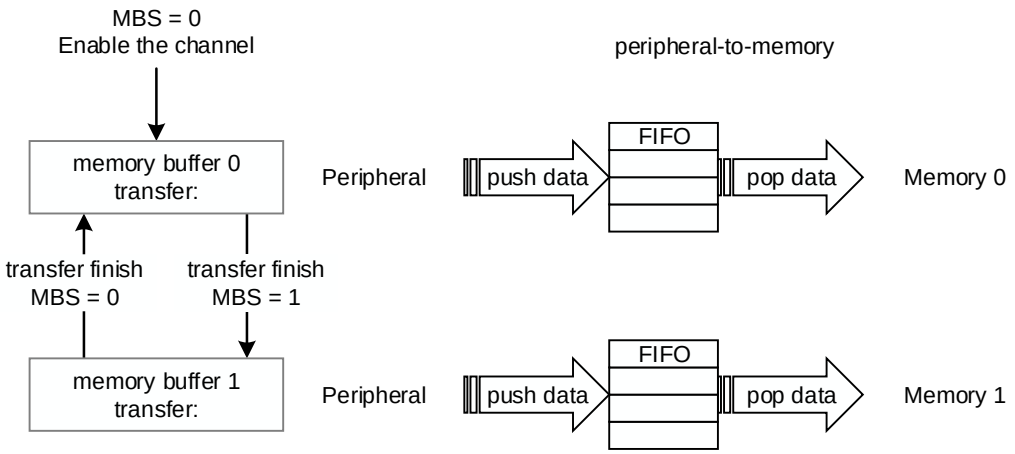

16.3.7. Transfer operation

Three transfer modes are supported to implement the data transfer, including peripheral-to-memory, memory-to-peripheral and memory-to-memory. Memory and peripheral can be configured as source and destination relatively.

Memory transfer

- Peripheral-to-memory mode:
  - In single-data mode, when the FIFO is not empty, DMA initiates a single memory transfer and writes data into the corresponding memory address.
  - In multi-data mode, when the FIFO counter reaches the critical value, DMA starts single or burst memory transfers to entirely fetch the FIFO data and write to the memory.
- Memory-to-peripheral mode:
  - In single-data mode, when the channel is enabled, DMA starts a single memory transfer and pushes the reading data into the FIFO immediately. During the transmission, the memory transfer is initiated only when the FIFO is empty.
  - In multi-data mode, when the channel is enabled, DMA starts several single or burst transfers to fill up the FIFO whether the peripheral request is asserted or not. During the transmission, the memory transfer is initiated once when there is enough space for it in the FIFO.
- Memory-to-memory mode: When the FIFO counter reaches the critical value, DMA starts single or burst memory transfers to entirely fetch the FIFO data and write to the memory.

Peripheral transfer

- Peripheral-to-memory mode: When receiving a peripheral request and there is enough space in the FIFO for a peripheral transfer, DMA starts a peripheral transfer and pushes the reading data into the FIFO.
- Memory-to-peripheral mode: When receiving a peripheral request and there is enough data in the FIFO for a peripheral transfer, DMA starts a peripheral transfers to fetch the

FIFO data and write to the peripheral.

16.3.8. Transfer finish

The DMA transfer is finished automatically and the FTFIFx bit in the DMA_INTF0 or DMA_INTF1 register is set when one of the following situations occurs:

- Transfer completion.
- Software clear.
- Error detection.

Transfer completion

When enabled, the DMA begins to transfer data between peripheral and memory. After the pre-programmed number of data items has been transferred successfully, the DMA transfer is completed and the CHEN bit is automatically cleared in the DMA_CHxCTL register.

- Peripheral-to-memory mode: When the CNT bits reach to zero and the contents of the FIFO have been entirely transferred into the memory, an end of transfer is generated.
- Memory-to-peripheral mode: When the CNT bits reach to zero, an end of transfer is achieved.
- Memory-to-memory: When the CNT bits reach to zero and the contents of the FIFO have been entirely transferred into the memory, an end of transfer is generated.

Software clear

The DMA transfer can be stopped by clearing the CHEN bit in the DMA_CHxCTL register by software. After the software cleared operation, the CHEN bit is still read as 1 to indicate that there are memory or peripheral transfers still active or the remaining data in the FIFO need to be transferred.

- Peripheral-to-memory: After the software cleared operation, the peripheral transfer is stopped when the current single or burst transfer is completed. To ensure that the data had been read from peripheral can be entirely transferred into the memory, the memory transfer continues to be active until the FIFO is empty. If the remaining byte number in the FIFO is not enough for a burst memory transfer, these data items are transferred in single transaction. If the remaining byte number is less than the memory transfer width, these data items are still written in memory transfer width with MSBs filled with zero. The software can read the CNT bits to calculate the number of valid data items in the memory. After the contents of the FIFO has been entirely transferred into the memory, the CHEN bit is cleared automatically by hardware and the FTFIFx bit in the DMA_INTF0 or DMA_INTF1 register is set.
- Memory-to-peripheral: After the software cleared operation, the DMA transfer is stopped when the current memory and peripheral transfer are completed. Then the CHEN bit is cleared automatically by hardware and the FTFIFx bit in the DMA_INTF0 or DMA_INTF1 register is set.

- Memory-to-memory: The same as the peripheral-to-memory mode with the source memory transfer is implemented through the peripheral port.

Error detection

Three types error can disable the DMA transfer:

- FIFO error: When a wrong FIFO configuration is detected, the DMA channel is disabled immediately without starting any transfers. In this situation, the FTFIFx is not asserted. For more information about the FIFO error, refer to section ***Error***.
- Bus error: When the memory or peripheral port attempts to access an address beyond the access scope, a bus error is detected and the DMA transfer is stopped immediately without setting the FTFIFx. If this error is aroused by the peripheral port, the CNT bits are still decreased by 1. For more information about the bus error, refer to section ***Error***.
- Register access error: In switch-buffer mode, an access error is detected when a write command is active on the memory base address register which is being accessed by DMA. When this error occurs, the DMA operation is the same as it after the CHEN bit software cleared. For more information about the register access error, refer to section ***Error***.

16.3.9. Channel configuration

When starting a new DMA transfer, it is recommended to respect the following steps:

1. Read the CHEN bit and judge whether the channel is enabled or not. If the channel is enabled, clear the CHEN bit by software or wait the current DMA transfer finished. When the CHEN bit is read as ‘0’, configuring and starting a new DMA transfer is allowed.
2. Clear the FTFIFx bit in the DMA_INTF0 or DMA_INTF1 register, or a new DMA transfer can not be re-enabled.
3. Configure the TM bits in the DMA_CHxCTL register to set the transfer mode.
4. Configure the memory and peripheral burst types, the target memory buffer, switch-buffer mode, priority of the channel, memory and peripheral transfer width, memory and peripheral address generation algorithm, circular mode in the DMA_CHxCTL register.
5. Configure multi-data mode, and the FCCV bits to set the FIFO counter critical value if multi-data mode is enabled in the DMA_CHxFCTL register.
6. Configure the enable bit for full transfer finish interrupt, half transfer finish interrupt, transfer access error interrupt, single-data mode exception interrupt in the DMA_CHxCTL register and the enable bit for FIFO error and exception interrupt in the DMA_CHxFCTL register.
7. Configure the DMA_CHxPADDR register for setting the peripheral base address.
8. If the switch-buffer mode is enabled, configure the memory base address in DMA_CHxM0ADDR and DMA_CHxM1ADDR register . If only one memory buffer is to

be used, configure the DMA_CHxM0ADDR or DMA_CHxM1ADDR corresponding with the MBS bit in the DMA_CHxCTL register.

9. Configure the DMA_CHxCNT register to set the total transfer data number.
10. Configure the CHEN bit with '1' in the DMA_CHxCTL register to enable the channel.

When restarting the suspended DMA transfer, it is recommended to respect the following steps:

1. Read the CHEN bit and ensure the DMA suspend operation has been completed. When the CHEN bit is read as '0', DMA is idle, restarting the DMA transfer is allowed.
2. Clear the FTFIFx bit in the DMA_INTF0 or DMA_INTF1 register, or the DMA transfer can not be re-enabled.
3. Read the DMA_CHxCNT register to obtain the number of the remaining data items and calculate the number of the data items had already been transferred.
4. Configure the DMA_CHxPADDR register to update the peripheral address pointer.
5. Configure the DMA_CHxM0ADDR or the DMA_CHxM1ADDR register to update the memory address pointer.
6. Configure the DMA_CHxCNT with the number of the remaining data items.
7. Configure the CHEN bit with '1' in the DMA_CHxCTL register to restart the channel.

16.4. Interrupts

Each DMA channel has a dedicated interrupt. There are five interrupt events connected to each interrupt, including full transfer finish interrupt, half transfer finish interrupt, transfer access error interrupt, single-data mode exception interrupt, and FIFO error and exception interrupt. A DMA channel interrupt may be produced when any interrupt event occurs on the channel.

Each interrupt event has a dedicated flag bit in the DMA_INTF0 or DMA_INTF1 register, a dedicated clear bit in the DMA_INTC0 and DMA_INTC1 register, and a dedicated enable bit in the DMA_CHxCTL and CHxFCTL register, as described in the ***Table 16-4. DMA interrupt events***.

Table 16-4. DMA interrupt events

Interrupt event	Flag bit	Enable bit	Clear bit
	DMA_INTF0 or DMA_INTF1	DMA_CHxCTL or DMA_CHxFCTL	DMA_INTC0 or DMA_INTC1
Full transfer finish	FTFIF	FTFIE	FTFIFC
Half transfer finish	HTFIF	HTFIE	HTFIFC
Transfer access error	TAEIF	TAEIE	TAEIFC
Single-data mode	SDEIF	SDEIE	SDEIFC

Interrupt event	Flag bit	Enable bit	Clear bit
	DMA_INTF0 or DMA_INTF1	DMA_CHxCTL or DMA_CHxFCTL	DMA_INTC0 or DMA_INTC1
exception			
FIFO error and exception	FEEIF	FEEIE	FEEIFC

These five events can be divided into three types:

- Flag: Full transfer finish flag and half transfer finish flag.
- Exception: Single-data mode exception and FIFO exception.
- Error: Transfer access error and FIFO error.

When the exception events occur, the DMA transmission is not affected and continues transferring normally. When the error events are detected, the DMA transmission is stopped. These three types of event are described in detail in the following sections.

16.4.1. Flag

Two flag events are supported, including full transfer finish flag and half transfer finish flag.

The full transfer finish flag is asserted, when one of the following situations occurs:

- The CNT bits reach to zero.
- When the channel is disabled by software before the end of the transfer, the current memory and peripheral is completed and the contents of the FIFO are entirely written into the memory in peripheral-to-memory or memory-to-memory mode.
- When the channel is disabled because of register access error before the end of the transfer, the current memory and peripheral is completed and the contents of the FIFO are entirely written into the memory in peripheral-to-memory or memory-to-memory mode.

When the full transfer finish flag is asserted and the enabled bit for the full transfer finish interrupt is set, an interrupt is generated.

The half transfer finish flag is asserted, only when DMA is the transfer flow controller and half of the CNT bits are transferred. If peripheral is the transfer flow controller, DMA does not know when half of data items has been transferred and the half transfer finish flag will stay zero.

When the half transfer finish flag is asserted and the enabled bit for the half transfer finish interrupt is set, an interrupt is generated.

16.4.2. Exception

Two exception events are supported, including single-data mode exception and FIFO exception. These exceptions have no effect on the DMA transmission.

Single-data mode exception

This exception can be detected only when the single-data mode is enabled and the transfer mode is peripheral-to-memory. When a peripheral request is valid and the FIFO is not empty, there are two or more data items stored in the FIFO after responding the peripheral request, which could be a problem for the subsequent processing of the data and the single-data mode exception bit SDEIFx will be set.

When the single-data mode exception is asserted and the enabled bit for the single-data mode exception interrupt is set, an interrupt is generated.

FIFO exception

When a FIFO underrun or a FIFO overrun condition occurs, the FIFO exception is asserted. This exception can be detected only when the transmission is between peripheral and memory.

In peripheral-to-memory mode, when a peripheral request is valid and there is not enough space in the FIFO for the single or burst peripheral transfer, a FIFO overrun condition is detected. This peripheral request is not responded until the FIFO space is enough, and the accuracy of the data transmission will not be destroyed.

In memory-to-peripheral mode, when a peripheral request is valid and there is not enough data in the FIFO for the single or burst peripheral, a FIFO underrun condition is detected. This peripheral request is not responded until the data number in the FIFO is enough, and the accuracy of the data transmission will not be destroyed.

When the FIFO exception is asserted and the enabled bit for the FIFO error and exception interrupt is set, an interrupt is generated.

16.4.3. Error

FIFO error and transfer access error (including the register access error and bus error) can be detected during the DMA transmission, and the transmission can be stopped when one of the errors occurs.

FIFO error

For a DMA operation, when the multi-data mode is enabled, the right and wrong configurations of the FIFO counter critical value corresponding with the memory transfer width and memory burst types are listed in ***Table 16-3. FIFO counter critical value configuration rules***.

If a wrong configuration is detected after enable the channel, a FIFO error is generated and the channel is disabled immediately without starting any transfers.

When the FIFO error is asserted and the enabled bit for the FIFO error and exception interrupt is set, an interrupt is generated.

Register access error

The register access error is detected only when the switch-buffer is enabled. If the software attempts to update a memory address register currently accessed by the DMA controller, a register access error is detected. For example, when the memory 0 buffer is the current source or destination, a write access on the DMA_CHxM0ADDR register could produce a register access error. When a register access error occurs, the DMA transmission is stopped when the current memory and peripheral transfer are completed and the valid FIFO data are entirely drained into the memory if needed.

When the register access error is asserted and the enabled bit for the transfer access error and exception interrupt is set, an interrupt is generated.

Bus error

When the address accessed by the DMA controller is beyond the allowed area, a response error will be received and the channel is disabled immediately. The allowed and forbidden access region for DMA0 and DMA1 are shown in ***Figure 16-8. System connection of DMA0 and DMA1***. When the bus error is asserted and the enabled bit for the transfer access error

and exception interrupt is set, an interrupt is generated.

Figure 16-8. System connection of DMA0 and DMA1

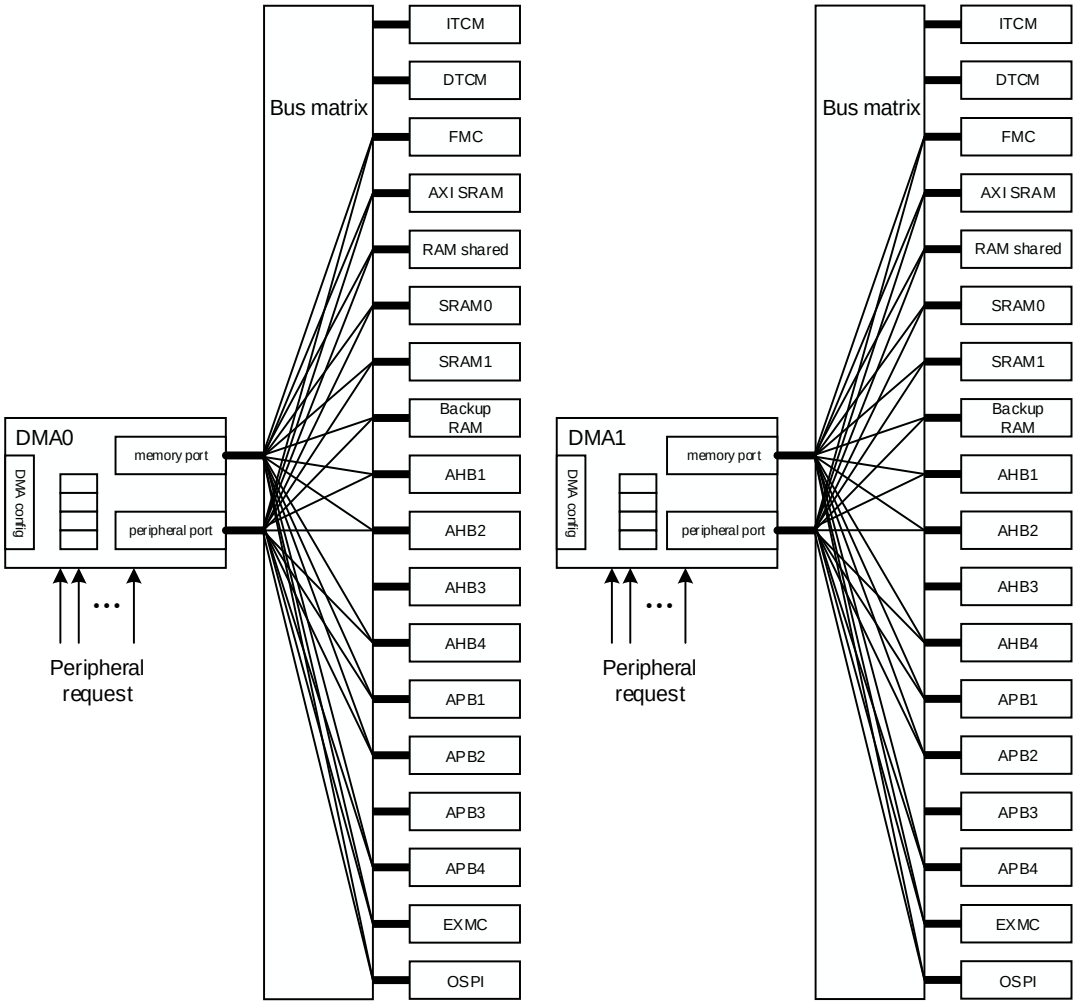

16.4.4. DMA request mapping

The DMA requests of a channel are coming from the AHB/APB peripherals through the corresponding channel output of DMAMUX request multiplexer, refers to ***Table 18-2. Request multiplexer input mapping***.

16.5. Register definition

DMA0 base address: 0x4002 0000

DMA1 base address: 0x4002 0400

16.5.1. Interrupt flag register 0 (DMA_INTF0)

Address offset: 0x00

Reset value: 0x0000 0000

This register has to be accessed by word (32-bit).

31	30	29	28	27	26	25	24	23	22	21	20	19	18	17	16
Reserved				FTFIF3	HTFIF3	TAEIF3	SDEIF3	Reserved	FEEIF3	FTFIF2	HTFIF2	TAEIF2	SDEIF2	Reserved	FEEIF2
				r	r	r	r		r	r	r	r	r		r

15	14	13	12	11	10	9	8	7	6	5	4	3	2	1	0
Reserved				FTFIF1	HTFIF1	TAEIF1	SDEIF1	Reserved	FEEIF1	FTFIF0	HTFIF0	TAEIF0	SDEIF0	Reserved	FEEIF0
				r	r	r	r		r	r	r	r	r		r

Bits	Fields	Descriptions
31:28	Reserved	Must be kept at reset value.
27/21/11/5	FTFIFx	Full Transfer finish flag of channel x (x=0…3) Hardware set and software cleared by writing 1 to the corresponding bit in DMA_INTC0 register. 0: Transfer has not finished on channel x 1: Transfer has finished on channel x
26/20/10/4	HTFIFx	Half transfer finish flag of channel x (x=0…3) Hardware set and software cleared by writing 1 to the corresponding bit in DMA_INTC0 register. 0: Half number of transfer has not finished on channel x 1: Half number of transfer has finished on channel x
25/19/9/3	TAEIFx	Transfer access error flag of channel x (x=0…3) Hardware set and software cleared by writing 1 to the corresponding bit in DMA_INTC0 register. 0: Transfer access error has not occurred on channel x 1: Transfer access error has occurred on channel x
24/18/8/2	SDEIFx	Single data mode exception of channel x (x=0…3) Hardware set and software cleared by writing 1 to the corresponding bit in DMA_INTC0 register. 0: Single data mode exception has not occurred on channel x 1: Single data mode exception has occurred on channel x

23/17/7/1	Reserved	Must be kept at reset value.
22/16/6/0	FEEIFx	FIFO error and exception of channel x (x=0…3) Hardware set and software cleared by writing 1 to the corresponding bit in DMA_INTC0 register. 0: FIFO error or exception has not occurred on channel x 1: FIFO error or exception has occurred on channel x

16.5.2. Interrupt flag register 1 (DMA_INTF1)

Address offset: 0x04

Reset value: 0x0000 0000

This register has to be accessed by word (32-bit).

31	30	29	28	27	26	25	24	23	22	21	20	19	18	17	16
Reserved				FTFIF7	HTFIF7	TAEIF7	SDEIF7	Reserved	FEEIF7	FTFIF6	HTFIF6	TAEIF6	SDEIF6	Reserved	FEEIF6
				r	r	r	r		r	r	r	r	r		r

15	14	13	12	11	10	9	8	7	6	5	4	3	2	1	0
Reserved				FTFIF5	HTFIF5	TAEIF5	SDEIF5	Reserved	FEEIF5	FTFIF4	HTFIF4	TAEIF4	SDEIF4	Reserved	FEEIF4
				r	r	r	r		r	r	r	r	r		r

Bits	Fields	Descriptions
31:28	Reserved	Must be kept at reset value.
27/21/11/5	FTFIFx	Full Transfer finish flag of channel x (x=4…7) Hardware set and software cleared by writing 1 to the corresponding bit in DMA_INTC1 register. 0: Transfer has not finished on channel x 1: Transfer has finished on channel x
26/20/10/4	HTFIFx	Half transfer finish flag of channel x (x=4…7) Hardware set and software cleared by writing 1 to the corresponding bit in DMA_INTC1 register. 0: Half number of transfer has not finished on channel x 1: Half number of transfer has finished on channel x
25/19/9/3	TAEIFx	Transfer access error flag of channel x (x=4…7) Hardware set and software cleared by writing 1 to the corresponding bit in DMA_INTC1 register. 0: Transfer access error has not occurred on channel x 1: Transfer access error has occurred on channel x
24/18/8/2	SDEIFx	Single data mode exception of channel x (x=4…7) Hardware set and software cleared by writing 1 to the corresponding bit in DMA_INTC1 register. 0: Single data mode exception has not occurred on channel x

		1: Single data mode exception has occurred on channel x
23/17/7/1	Reserved	Must be kept at reset value.
22/16/6/0	FEEIFx	FIFO error and exception of channel x (x=4…7) Hardware set and software cleared by writing 1 to the corresponding bit in DMA_INTC1 register. 0: FIFO error or exception has not occurred on channel x 1: FIFO error or exception has occurred on channel x

16.5.3. Interrupt flag clear register 0 (DMA_INTC0)

Address offset: 0x08

Reset value: 0x0000 0000

This register has to be accessed by word (32-bit).

31	30	29	28	27	26	25	24	23	22	21	20	19	18	17	16
Reserved				FTFIFC3	HTFIFC3	TAEIFC3	SDEIFC3	Reserved	FEEIFC3	FTFIFC2	HTFIFC2	TAEIFC2	SDEIFC2	Reserved	FEEIFC2
				w	w	w	w		w	w	w	w	w		w

15	14	13	12	11	10	9	8	7	6	5	4	3	2	1	0
Reserved				FTFIFC1	HTFIFC1	TAEIFC1	SDEIFC1	Reserved	FEEIFC1	FTFIFC0	HTFIFC0	TAEIFC0	SDEIFC0	Reserved	FEEIFC0
				w	w	w	w		w	w	w	w	w		w

Bits	Fields	Descriptions
31:28	Reserved	Must be kept at reset value.
27/21/11/5	FTFIFCx	Clear bit for Full transfer finish flag of channel x (x=0…3) 0: No effect 1: Clear full transfer finish flag
26/20/10/4	HTFIFCx	Clear bit for half transfer finish flag of channel x (x=0…3) 0: No effect 1: Clear half transfer finish flag
25/19/9/3	TAEIFCx	Clear bit for ransfer access error flag of channel x (x=0…3) 0: No effect 1: Clear transfer access error flag
24/18/8/2	SDEIFCx	Clear bit for single data mode exception of channel x (x=0…3) 0: No effect 1: Clear single data mode exception flag
23/17/7/1	Reserved	Must be kept at reset value.
22/16/6/0	FEEIFCx	Clear bit for FIFO error and exception of channel x (x=0…3) 0: No effect 1: Clear FIFO error and exception flag

16.5.4. Interrupt flag clear register 1 (DMA_INTC1)

Address offset: 0x0C

Reset value: 0x0000 0000

This register has to be accessed by word (32-bit).

31	30	29	28	27	26	25	24	23	22	21	20	19	18	17	16
Reserved				FTFIFC7	HTFIFC7	TAEIFC7	SDEIFC7	Reserved	FEEIFC7	FTFIFC6	HTFIFC6	TAEIFC6	SDEIFC6	Reserved	FEEIFC6
				w	w	w	w		w	w	w	w	w		w

15	14	13	12	11	10	9	8	7	6	5	4	3	2	1	0
Reserved				FTFIFC5	HTFIFC5	TAEIFC5	SDEIFC5	Reserved	FEEIFC5	FTFIFC4	HTFIFC4	TAEIFC4	SDEIFC4	Reserved	FEEIFC4
				w	w	w	w		w	w	w	w	w		w

Bits	Fields	Descriptions
31:28	Reserved	Must be kept at reset value.
27/21/11/5	FTFIFCx	Clear bit for full transfer finish flag of channel x (x=4…7) 0: No effect 1: Clear full transfer finish flag
26/20/10/4	HTFIFCx	Clear bit for half transfer finish flag of channel x (x=4…7) 0: No effect 1: Clear half transfer finish flag
25/19/9/3	TAEIFCx	Clear bit for transfer access error flag of channel x (x=4…7) 0: No effect 1: Clear transfer access error flag
24/18/8/2	SDEIFCx	Clear bit for single data mode exception of channel x (x=4…7) 0: No effect 1: Clear single data mode exception flag
23/17/7/1	Reserved	Must be kept at reset value.
22/16/6/0	FEEIFCx	Clear bit for FIFO error and exception of channel x (x=4…7) 0: No effect 1: Clear FIFO error and exception flag

16.5.5. Channel x control register (DMA_CHxCTL)

x = 0...7, where x is a channel number

Address offset: 0x10 + 0x18 × x

Reset value: 0x0000 0000

This register has to be accessed by word (32-bit).

31	30	29	28	27	26	25	24	23	22	21	20	19	18	17	16
Reserved							MBURST[1:0]		PBURST[1:0]		Reserved	MBS	SBMEN	PRIO[1:0]	

								rw		rw		rw	rw		rw
15	14	13	12	11	10	9	8	7	6	5	4	3	2	1	0
PAIF	MWIDTH[1:0]		PWIDTH[1:0]		MNAGA	PNAGA	CMEN	TM[1:0]		Reserved	FTFIE	HTFIE	TAEIE	SDEIE	CHEN
rw	rw		rw		rw	rw	rw	rw			rw	rw	rw	rw	rw

Bits	Fields	Descriptions
31:25	Reserved	Must be kept at reset value.
24:23	MBURST[1:0]	Transfer burst type of memory Software set and clear. 00: single burst 01: INCR4 (4-beat incrementing burst) 10: INCR8 (8-beat incrementing burst) 11: INCR16 (16-beat incrementing burst) These bits can not be written when CHEN is ‘1’. These bits are automatically locked as ‘00’ by hardware immdiately after enable CHEN if MDMEN in the DMA_CHxFCTL register is configured to ‘0’.
22:21	PBURST[1:0]	Transfer burst type of peripheral Software set and clear 00: single burst 01: INCR4 (4-beat incrementing burst) 10: INCR8 (8-beat incrementing burst) 11: INCR16 (16-beat incrementing burst) These bits can not be written when CHEN is ‘1’. These bits are automatically locked as ‘00’ by hardware immediately after enable CHEN if MDMEN in the DMA_CHxFCTL register is configured to ‘0’.
20	Reserved	Must be kept at reset value.
19	MBS	Memory buffer select Hardware and software set, hardware and software clear. 0: Memory 0 is selected as memory transfer area 1: Memory 1 is selected as memory transfer area This bit can not be written when CHEN is ‘1’. During the transmission, this bit can be set and cleared by hardware at the end of transfer to indicate which memory buffer is being accessed by DMA.
18	SBMEN	Switch-buffer mode enable Software set and clear. 0: Disable switch-buffer mode 1: Enable switch-buffer mode This bit can not be written when CHEN is ‘1’.
17:16	PRIO[1:0]	Priority level Software set and clear.

		00: Low 01: Medium 10: High 11: Ultra high These bits can not be written when CHEN is ‘1’.
15	PAIF	Peripheral address increment fixed Software set and clear. 0: The peripheral address increment is determined by PWIDTH 1: The peripheral address increment is fixed to 4 This bit can not be written when CHEN is ‘1’. During the transmission, when PNAGA is configured to ‘0’, this bit has no effect. These bits are automatically locked as ‘0’ by hardware immediately after enable CHEN if MDMEN in the DMA_CHxFCTL register is configured to ‘0’ or PBURST are not equal to ‘00’.
14:13	MWIDTH[1:0]	Transfer width of memory Software set and clear. 00: 8-bit 01: 16-bit 10: 32-bit 11: Reserved These bits can not be written when CHEN is ‘1’. These bits are automatically locked as PWIDTH by hardware immediately after enable CHEN if MDMEN in the DMA_CHxFCTL register is configured to ‘0’.
12:11	PWIDTH[1:0]	Transfer width of peripheral Software set and clear. 00: 8-bit 01: 16-bit 10: 32-bit 11: Reserved These bits can not be written when CHEN is ‘1’.
10	MNAGA	Next address generation algorithm of memory Software set and clear 0: Fixed address mode 1: Increasing address mode This bit can not be written when CHEN is ‘1’.
9	PNAGA	Next address generation algorithm of peripheral Software set and clear 0: Fixed address mode 1: Increasing address mode This bit can not be written when CHEN is ‘1’.
8	CMEN	Circular mode enable

		Software set and clear. 0: Disable circular mode. 1: Enable circular mode This bit can not be written when CHEN is ‘1’. This bit is automatically locked as ‘1’ by hardware immediately after enable CHEN if SBMEN is configured to ‘1’.
7:6	TM[1:0]	Transfer mode Software set and clear. 00: Read from peripheral and write to memory 01: Read from memory and write to peripheral 10: Read from memory and write to memory 11: Reserved These bits can not be written when CHEN is ‘1’.
5	Reserved	Must be kept at reset value.
4	FTFIE	Enable bit for full transfer finish interrupt Software set and clear. 0:Disable full transfer finish interrupt 1:Enable full transfer finish interrupt
3	HTFIE	Enable bit for half transfer finish interrupt Software set and clear. 0: Disable half transfer finish interrupt 1: Enable half transfer finish interrupt
2	TAEIE	Enable bit for tranfer access error interrupt Software set and clear. 0: Disable tranfer access error interrupt 1: Enable tranfer access error interrupt
1	SDEIE	Enable bit for single data mode exception interrupt Software set and clear. 0: Disable single data mode exception interrupt 1: Enable single data mode exception interrupt
0	CHEN	Channel enable Software set, hardware clear. 0: Disable channel 1: Enable channel When this bit is asserted, the DMA transfer is started. This bit is automaticly cleared when one of the following situations occurs: When the transfer of channel is fully finished. When a wrong FIFO configuration or a transfer access error is detected. After a software clear operation, this bit is still read as 1 to indicate that there are memory or peripheral transfers still active until hardware has terminated all activity,

at which point this bit is read as 0. Software can therefore poll this bit to determine when this channel is free for a new DMA transfer.

16.5.6. Channel x counter register (DMA_CHxCNT)

x = 0...7, where x is a channel number

Address offset: 0x14 + 0x18 × x

Reset value: 0x0000 0000

This register has to be accessed by word (32-bit).

31	30	29	28	27	26	25	24	23	22	21	20	19	18	17	16
Reserved															

15	14	13	12	11	10	9	8	7	6	5	4	3	2	1	0
CNT[15:0]															
rw															

Bits	Fields	Descriptions
31:16	Reserved	Must be kept at reset value.
15:0	CNT[15:0]	Transfer counter These bits can not be written when CHEN in the DMA_CHxCTL register is ‘1’. These bits are related to PWIDTH. During the transmission, These bits signify the number of remaining data to be transferred. After each DMA peripheral transfer, CNT is decreamented by 1. If CMEN or SBMEN in the DMA_CHxCTL register is configured to ‘1’, CNT can be reloaded automatically to the original value at the end of transfer.

16.5.7. Channel x peripheral base address register (DMA_CHxPADDR)

x = 0...7, where x is a channel number

Address offset: 0x18 + 0x18 × x

Reset value: 0x0000 0000

This register has to be accessed by word (32-bit).

31	30	29	28	27	26	25	24	23	22	21	20	19	18	17	16
PADDR[31:16]															
rw															

15	14	13	12	11	10	9	8	7	6	5	4	3	2	1	0
PADDR[15:0]															
rw															

Bits	Fields	Descriptions
31:0	PADDR[31:0]	Peripheral base address

These bits can not be written when CHEN in the DMA_CHxCTL register is '1'.
When PWIDTH is 01 (16-bit), the LSB of these bits is ignored. Access is automatically aligned to a half word address.
When PWIDTH is 10 (32-bit), the two LSBs of these bits are ignored. Access is automatically aligned to a word address.
Note: If PAIF in the DMA_CHxCTL register is enable, these bits must be configured to 32-bit alignment.

16.5.8. Channel x memory 0 base address register (DMA_CHxM0ADDR)

x = 0...7, where x is a channel number
Address offset: 0x1C + 0x18 × x
Reset value: 0x0000 0000

This register has to be accessed by word (32-bit).

31	30	29	28	27	26	25	24	23	22	21	20	19	18	17	16
M0ADDR[31:16]															
rw															

15	14	13	12	11	10	9	8	7	6	5	4	3	2	1	0
M0ADDR[15:0]															
rw															

Bits	Fields	Descriptions
31:0	M0ADDR[31:0]	Memory 0 base address When MBS in the DMA_CHxCTL register is read as to '0', these bits specific the memory base address accessed by DMA during the transmission. These bits can not be written when CHEN in the DMA_CHxCTL register is '1' and MBS in the DMA_CHxCTL register is read as '0'. When memory 0 is selected as memory transfer area and MWIDTH in the DMA_CHxCTL register is 01 (16-bit), the LSB of these bits is ignored. Access is automatically aligned to a half word address. When memory 0 is selected as memory transfer area and MWIDTH in the DMA_CHxCTL register is 10 (32-bit), the two LSBs of these bits are ignored. Access is automatically aligned to a word address.

16.5.9. Channel x memory 1 base address register (DMA_CHxM1ADDR)

x = 0...7, where x is a channel number
Address offset: 0x20 + 0x18 × x
Reset value: 0x0000 0000

This register has to be accessed by word (32-bit).

31	30	29	28	27	26	25	24	23	22	21	20	19	18	17	16
M1ADDR[31:16]															

rw

15	14	13	12	11	10	9	8	7	6	5	4	3	2	1	0
M1ADDR[15:0]															

rw

Bits	Fields	Descriptions
31:0	M1ADDR[31:0]	Memory 1 base address When MBS in the DMA_CHxCTL register is read as to ‘1’, these bits specific the memory base address accessed by DMA during the transmission. These bits can not be written when CHEN in the DMA_CHxCTL register is ‘1’ and MBS in the DMA_CHxCTL register is read as ‘1’. When memorty 1 is selected as memory tranfer area and MWIDTH in the DMA_CHxCTL register is 01 (16-bit), the LSB of these bits is ignored. Access is automatically aligned to a half word address. When memorty 1 is selected as memory tranfer area and MWIDTH in the DMA_CHxCTL register is 10 (32-bit), the two LSBs of these bits are ignored. Access is automatically aligned to a word address.

16.5.10. Channel x FIFO control register (DMA_CHxFCTL)

x = 0...7, where x is a channel number

Address offset: 0x24 + 0x18 × x

Reset value: 0x0000 0000

This register has to be accessed by word (32-bit).

31	30	29	28	27	26	25	24	23	22	21	20	19	18	17	16
Reserved															

15	14	13	12	11	10	9	8	7	6	5	4	3	2	1	0
Reserved								FEEIE	Reserved	FCNT[2:0]			MDMEN	FCCV[1:0]	
								rw		r			rw	rw	

Bits	Fields	Descriptions
31:8	Reserved	Must be kept at reset value.
7	FEEIE	Enable bit for FIFO error and exception interrupt Software set and clear. 0: Disable FIFO error and exception interrupt 1: Enable FIFO error and exception interrupt
6	Reserved	Must be kept at reset value.
5:3	FCNT[2:0]	FIFO counter Hardware set and clear. 000: No data

		001: One word 010: Two words 011: Three words 100: Empty 101: Full 110~111: Reserved These bits specific the number of data stored in FIFO during the transmission. When MDMEN is configured to ‘0’, these bits has no meaning.
2	MDMEN	Multi-data mode enable Software set and clear. 0: Disable Multi-data mode 1: Enable Multi-data mode These bits can not be written when CHEN in the DMA_CHxCTL register is ‘1’. These bits are automatically locked as ‘1’ by hardware immediately after enable CHEN in the DMA_CHxCTL register if TM in the DMA_CHxCTL register is configured to ‘10’.
1:0	FCCV[1:0]	FIFO counter critical value Software set and clear 00: One word 01: Two Words 10: Three Words 11: Four Words These bits can not be written when CHEN in the DMA_CHxCTL register is ‘1’. When MDMEN is configured to ‘0’, these bits has no meaning.

17. Master direct memory access controller (MDMA)

17.1. Overview

The master direct memory access (MDMA) controller provides a hardware method of transferring data between peripherals and/or memory without intervention from the MCU, thereby increasing system performance by off-loading the MCU from copying large amounts of data and avoiding frequent interrupts to serve peripherals needing more data or having available data.

An AXI master interface, an AHB master interface and two 16 depth 64-bit width FIFOs are presented in MDMA controller, which achieves a high MDMA transmission performance. The AXI interface is used for main memory and peripheral register access (system access port), and the AHB interface is used for Cortex®-M7 TCM memory access (TCM access port). MDMA can be used in combination with a DMA controller (DMA0 or DMA1). The MDMA can provide up to 16 channels. Each channel request can be selected among any request source. The built-in arbiter is used to handle priority among MDMA requests.

17.2. Characteristics

- AXI / AHB master interfaces, the AXI bus interface is used for transferring data between peripherals and memory, and the AHB bus interface is used for accessing Cortex®-M7 TCM memory.
- 16 channels and each channel supports software triggering and requests can be selected among any request source.
- Support independent single, 2, 4, 8, 16, 32, 64, 128-beat incrementing burst source and destination transfer.
- Software MDMA channel priority (low, medium, high, ultra high) and hardware MDMA channel priority (the lower the channel number, the higher the priority).
- Support independent 8, 16, 32, 64-bit source and destination transfer.
- Support independent fixed, increasing and decreasing address generation algorithm of source and destination.
- The data length and address increment of the source and destination can be configured.
- Support three transfer modes:
  - Read from memory and write to memory (software triggered).
  - Read from peripheral and write to memory (or memory mapped peripherals).
  - Read from memory (or memory mapped peripherals) and write to peripheral.
- Automatic pack / unpack of data to optimize bandwidth when the data width of the source and destination are different.
- 34 hardware trigger sources, all channels can be connected to any hardware trigger source
- Two FIFOs of 16 double word depth to maximize data bandwidth and bus utilization.

- The AHB bus interface is used to access Cortex®-M7 TCM memory. And only when the increment and data size are identical and lower than or equal to 32-bit, burst access is allowed. When the increment and data size is larger than 32 bits, burst access is prohibited.
- Five types of event flags and independent interrupts for each channel that can be enabled and cleared.

17.3. Function overview

Figure 17-1. Block diagram of MDMA

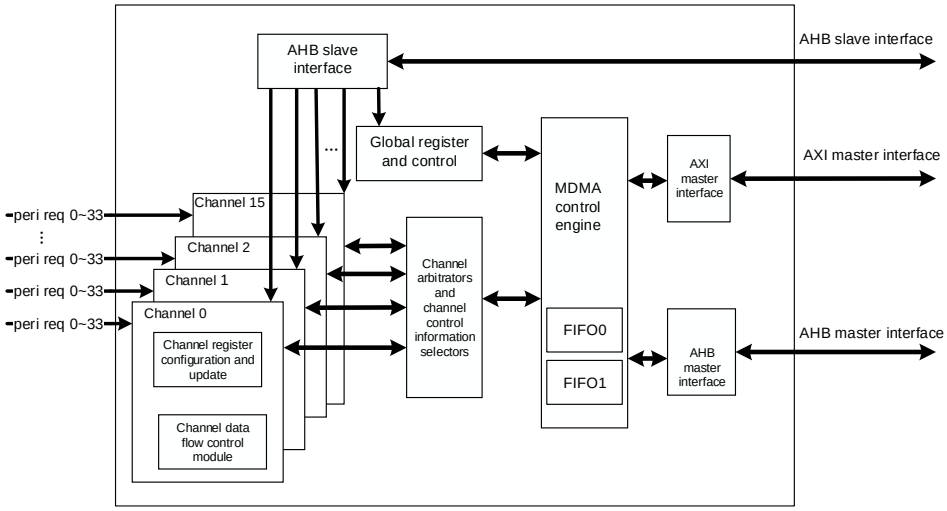

As is shown in ***Figure 17-1. Block diagram of MDMA***, MDMA controller consists of four parts:

- AHB slave interface for MDMA configuration.
- An AXI master interface and an AHB master interface for data transmission.
- Arbiter inside to manage requests coming at the same time.
- Data processing and counting.

The MDMA controller transfers data from one address to another without CPU intervention. It supports multiple data sizes, burst types, address generation algorithm, priority levels and several transfer modes to allow for flexible application by configuring the corresponding bits in MDMA registers. All the MDMA registers can be 32-bit configured through AHB slave interface.

TRIGMOD[1:0] in the MDMA_CHxCFG register determines the data transfer mode of MDMA, as shown in ***Table 17-1. Transfer mode***.

Table 17-1. Transfer mode

Transfer mode	TRIGMOD[1:0]
Buffer transfer	00
Block transfer	01

Transfer mode	TRIGMOD[1:0]
Multi-block transfer	10
Link transfer	11

- Buffer transfer can transmit up to 128 bytes at a time.
- Block transfer can transmit a maximum of 64KB at a time. The number of bytes to be transferred can be configured by TBNUM[16:0] in the MDMA_CHxBTCFG register. The transfer process is automatically split into multiple buffer transfers by the hardware.
- Multi-block transfer includes multiple block transfers. The number of blocks to be transferred can be configured by BRNUM[11:0] in the MDMA_CHxBTCFG register.
- Link transfer contains multiple multi-block/block transfers and the link address can be configured in the MDMA_CHxLADDR register.

The connections of the four modes is shown in ***Figure 17-2. Connections of the four modes***.

Figure 17-2. Connections of the four modes

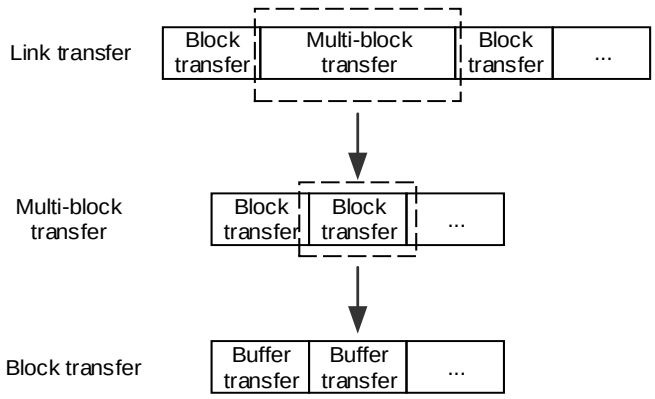

The MDMA controller has 16 channels, each channel supports software triggering and can be selected between any of the request sources shown in ***Table 17-2. MDMA hardware request sources***. The channel x hardware trigger source can be selected by configuring the TRIGSEL[5:0] bit field in the MDMA_CHxCTL1 register.

Table 17-2. MDMA hardware request sources

request sources TRIGSEL[5:0]	source
0	DMA0_CH0_TRIG
1	DMA0_CH1_TRIG
2	DMA0_CH2_TRIG
3	DMA0_CH3_TRIG
4	DMA0_CH4_TRIG
5	DMA0_CH5_TRIG
6	DMA0_CH6_TRIG
7	DMA0_CH7_TRIG
8	DMA1_CH0_TRIG
9	DMA1_CH1_TRIG

request sources TRIGSEL[5:0]	source
10	DMA1_CH2_TRIG
11	DMA1_CH3_TRIG
12	DMA1_CH4_TRIG
13	DMA1_CH5_TRIG
14	DMA1_CH6_TRIG
15	DMA1_CH7_TRIG
16	TLI_INT
17	Reserved
18	Reserved
19	Reserved
20	Reserved
21	Reserved
22	OSPI0_FT
23	OSPI0_TC
24	IPA_CLUT_TRIG
25	IPA_TC_TRIG
26	IPA_TWM_TRIG
27	Reserved
28	Reserved
29	SDIO0_DATA_END
30	SDIO0_BUF_END
31	SDIO0_CMD_END
32	OSPI1_FT
33	OSPI1_TC

17.3.1. Data process

Arbitration

MDMA manages requests based on channel request priority through an arbiter. When more than one requests are received at the same time, the arbiter determines which channel is selected to respond according to the following priority rules:

- Software priority: Four levels, including low, medium, high and ultra high by configuring the PRIO[1:0] bits in the MDMA_CHxCTL0 register.
- Hardware priority: For channels with equal software priority level, priority is given to the channel with lower channel number. For example, if channel 0 and channel 2 are configured with the same software priority, the priority of channel 0 is higher than that of channel 2.

Data type

The word, halfword, and byte exchange operations on the target data can be configured by the WES/HWES/BES bits in the MDMA_CHxCTL0 register. The data exchange process is shown in ***Figure 17-3. Word, halfword, byte order exchange***.

Figure 17-3. Word, halfword, byte order exchange

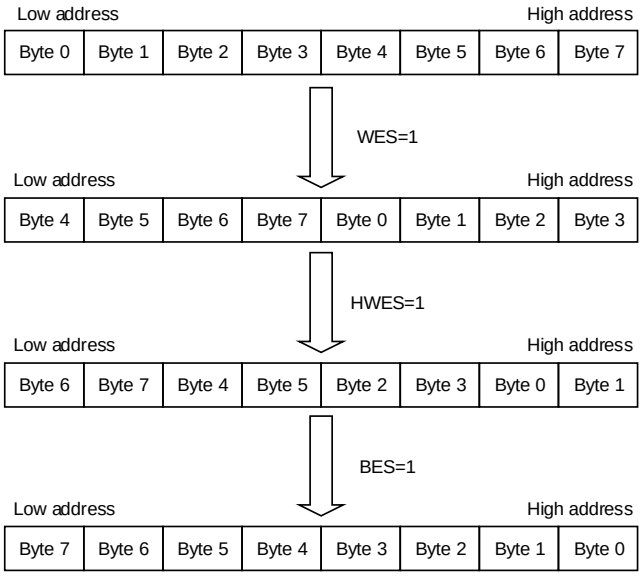

Transfer width

The SWIDTH[1:0] and DWIDTH[1:0] bit fields of MDMA_CHxCFG register determine the data width of source and destination respectively. MDMA controller supports data widths of 8, 16, 32 and 64 bits. When PKEN is enabled and the data width SWIDTH[1:0] and DWIDTH[1:0] are not equal, MDMA packs/unpacks data automatically for data transmission in order to optimize the bandwidth. When PKEN is disabled and the data width SWIDTH[1:0] and DWIDTH[1:0] are not equal, the padding and alignment mode can be selected by configuring PAMOD[1:0] bits in the MDMA_CHxCFG register.

For example, when SWIDTH[1:0] = 10 (32 bits) and DWIDTH[1:0] = 00 (8 bits), the padding and alignment methods are shown in ***Figure 17-4. Data padding and alignment (source greater than destination)***.

Figure 17-4. Data padding and alignment (source greater than destination)

Suppose the MSB of B0 and B3 is 1, and the MSB of B1 and B2 is 0, when SWIDTH[1:0] = 00 (8 bits) and DWIDTH[1:0] = 10 (32 bits), the padding and alignment methods are shown in ***Figure 17-5. Data padding and alignment (source less than destination)***.

Figure 17-5. Data padding and alignment (source less than destination)

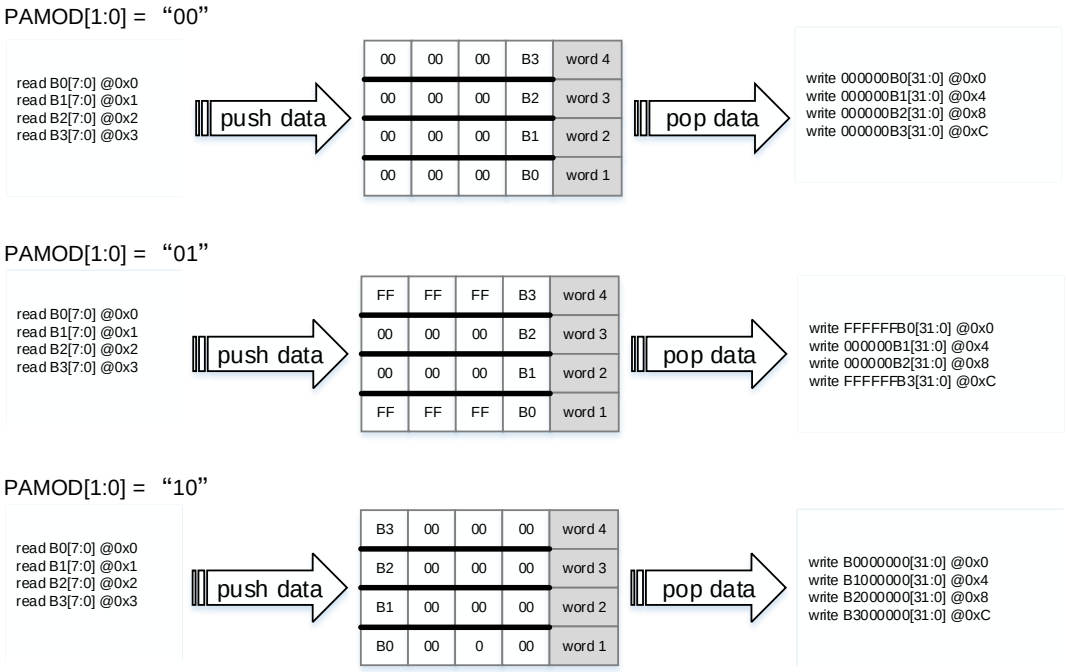

Pack / unpack

In MDMA transmission, the data size of source SWIDTH and the data size of destination DWIDTH are independent of each other, and the configuration is more flexible. When SWIDTH and DWIDTH are not equal, read/write transmission width of MDMA is different, MDMA will pack / unpack the data automatically. If the PKEN bit in MDMA_CHxCFG register is configured as 1, the source data will be packed / unpacked to match the data size of destination. When packing/unpacking data, the little endian mode is used. For example, when

SWIDTH[1:0] = 00, DWIDTH[1:0] = 10, the unpacking process is shown in ***Figure 17-6. Data packing / unpacking***.

Figure 17-6. Data packing / unpacking

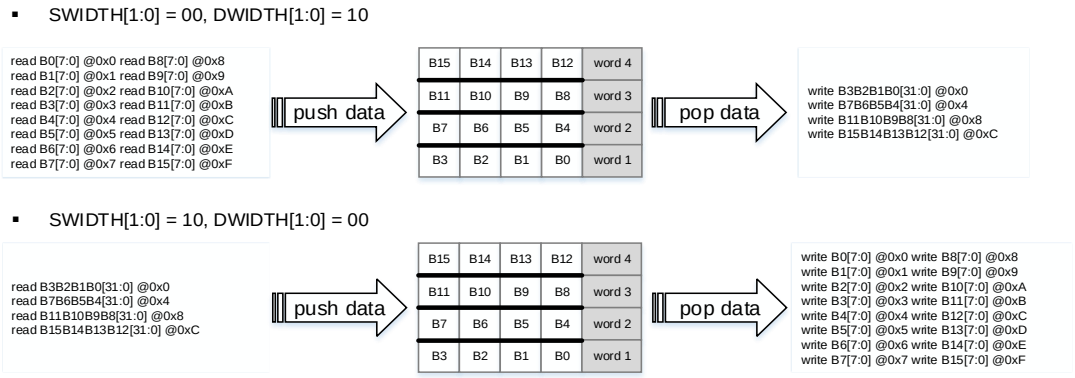

Burst transmission

The SBURST[2:0] and DBURST[2:0] bits in MDMA_CHxCFG register determine the burst transmission mode of the source and destination. Both the source and destination of the MDMA supports single burst, 2-beat, 4-beat, 8-beat, 16-beat, 32-beat, 64-beat and 128-beat incrementing burst. For the single data transmission mode, SBURST[2:0] and DBURST[2:0] automatically locked as '00' by hardware immediately after the MDMA channel is enabled.

Note: The values of SBURST[2:0] and DBURST[2:0] must be programmed to ensure that the burst size is less than the transmission length, otherwise the results will be unpredictable.

FIFO

The MDMA controller provides a 256 bytes buffer that is divided into two FIFOs with a depth of 16 doulbe word, and shared by all channels. The FIFOs are used to store the source data before writing it to the destination temporarily.

FIFO0 is used to store the data to be transferred of the current buffer. When the amount of data in FIFO0 meets the destination burst, MDMA will start the write operation immediately. When all the data to be transferred in the buffer has been read to FIFO0, the arbitrator begins to arbitrate the channel priority and writes the data to be transferred of the next buffer to FIFO1.

If an error occurred during the buffer transfer, the channel will be disabled and the data in FIFO0 and FIFO1 will be discarded.

17.3.2. Address generation

Both source and destination support three address generation algorithms: fixed mode, increasing mode, and decreasing mode independently. The DIMOD[1:0] and SIMOD[1:0] bits in MDMA_CHxCFG register are used to configure the address generation algorithm for the destination and source respectively, as is shown in ***Table 17-3. Source and destination***

address generation configuration.

Table 17-3. Source and destination address generation configuration

SIMOD[1:0]		DIMOD[1:0]	
00	No increment	00	No increment
10	Increment of the source is SIOS	10	Increment of the destination is DIOS
11	decrement of the source is SIOS	11	decrement of the destination is DIOS

In fixed mode, SIMOD[1:0] or DIMOD[1:0] is configured as “00”, the address of the source and destination is always the original base address (MDMA_CHxSADDR and MDMA_CHxDADDR).

In increasing mode or decreasing mode, the source and destination address of the next transfer is the current address plus/minus 1 (or 2,4,8), depending on the configuration of SIOS[1:0] or DIOS[1:0] in MDMA_CHxCFG.

The increment and data size can be programmed independently to optimize pack operations.

17.3.3. Transfer modes

Buffer transfer mode

MDMA supports single, 2-beat, 4-beat, 8-beat, 16-beat, 32-beat, 64-beat and 128-beat incrementing burst transmission. The burst transmission mode of the source and destination can be configured by SBURST[2:0] and DBURST[2:0] bits in MDMA_CHxCFG register. A buffer transfer is a single or burst transfer of data. SWIDTH[1:0] and DWIDTH[1:0] in MDMA_CHxCFG register are used for configuring the data width of source and destination.

When MDMA receives a request, the arbitrator manages it based on the MDMA channel request priority. If the MDMA_CHxMADDR register is not 0, the request is acknowledged when the mask data is written to the address specified by MADDR[31:0]. Or else, writing data to or reading data from the requesting peripheral will reset the request. If the request is completed by the target peripheral, BWMOD in the MDMA_CHxCFG register must be cleared to avoid wrong new MDMA requests.

If TRIGMOD[1:0] in the MDMA_CHxCFG register is 00 and the buffer transfer has completed, MDMA will wait for another request on the same channel (such as channel A).

- If another channel (such as channel B) is requested before the next request has occurred on channel A, the request from channel B will be responded regardless of whether channel B has a higher priority than channel A.
- If the next request is detected after the completion of a buffer transfer on channel A, and at the same time a request occurs on another channel (channel C), the arbitrator will manage the request event based on MDMA channel request priority.

When the buffer transfer is completed, the TCF bit in MDMA_CHxSTAT0 register will be set. The TCF bit can be cleared by writing 1 to the TCFC bit in MDMA_CHxSTATC register

If TRIGMOD[1:0] is not 00 and the total number of data to be transferred is greater than 128 bytes, then the arbitrator manages the request event based on the MDMA channel request priority after each buffer transfer. If there is no other request of higher priority, the next buffer transfer continues. If there are other requests with higher priorities, MDMA will process the higher priority requests first.

Block transfer mode

In block transfer mode, the block size is configured by the TBNUM[16:0] in MDMA_CHxBTCFG register, and the maximum number of bytes to be transferred in the block is 64KB. When TBNUM[16:0] counts to 0, the block transfer is completed, and TCF bit, BTCF bit and CHTCF bit in MDMA_CHxSTAT0 register will be set. The CHEN bit in the MDMA_CHxCTL0 register will be cleared by the hardware and the channel will not continue to accept MDMA requests.

In the multi-block transfer mode, if the current block is not the last block, the hardware will reload the length of the first block transfer automatically after the completion of the current block transfer, and calculate the new source address and destination address according to the values of DADDRUV and SADDRUV in MDMA_CHxMBADDRU register and SADDRUM bit and DADDRUM bit in MDMA_CHxBTCFG register, then MDMA will start the next block transfer. If the current block is the last block, when TBNUM[16:0] counts to 0 and the block transfer is complete, the TCF bit, BTCF bit, MBTCF bit and CHTCF bit in MDMA_CHxSTAT0 register will be set. The CHEN bit in the MDMA_CHxCTL0 register will be cleared by the hardware and the channel will not continue to accept MDMA requests.

In link mode, if the current block is a block transfer or the last block of multi-block transfer and MDMA_CHxLADDR is not 0, the new block configuration information is loaded according to the address specified by LADDR in the MDMA_CHxLADDR register after the current block transfer is completed, and the new block / multi-block transfer starts. If the current block is a block transfer or the last block of multi-block transfer and MDMA_CHxLADDR is 0, the TCF bit, MBTCF / BTCF bit and CHTCF bit in the MDMA_CHxSTAT0 register will be set. The CHEN bit in the MDMA_CHxCTL0 register will be cleared by the hardware and the channel will not continue to accept MDMA requests.

If the block size is not an integer multiple of the source or destination data size, the BZERR bit in MDMA_CHxSTAT1 register will be set by hardware. The BZERR bit can be cleared by writing 1 to the ERRC bit in MDMA_CHxSTATC register.

The TCF bit, BTCF bit, MBTCF bit and CHTCF bit can be cleared by writing 1 to the TCFC bit, the BTCFC bit, MBTCFC and CHTCFC bit in MDMA_CHxSTATC register respectively.

Multi-block transfer mode

The number of blocks to be transferred can be configured by BRNUM[11:0] in the

MDMA_CHxBTCFG register. When BRNUM[11:0] is not 0, the multi-block transfer mode is enabled. BRNUM[11:0] can be configured from 0 to 4095. When a block transfer is completed, the BRNUM value is reduced by 1. The source address and the destination address of the next block transfer will be update in MDMA_CHxSADDR register and MDMA_CHxDADDR register according to the update mode configured by the SADDRUM bit and DADDRUM bit in the MDMA_CHxBTCFG register. The update mode of source and destination address is shown in ***Table 17-4. Update mode of source and destination address***. TBNUM[16:0] in MDMA_CHxBTCFG register will reload the value of the first block transfer. When the last block transfer is completed, the TCF bit, BTCF bit, MBTCF bit, and CHTCF bit in the MDMA_CHxSTAT0 register will be set, the CHEN bit in MDMA_CHxCTL0 register will be will be cleared by the hardware and the channel will not continue to accept MDMA requests. The TCF bit, BTCF bit, MBTCF bit and CHTCF bit can be cleared by writing 1 to the TCFC bit, the BTCFC bit, MBTCFC and CHTCFC bit in MDMA_CHxSTATC register respectively.

Table 17-4. Update mode of source and destination address

Source / destination address	Update mode configuration	Updated source and destination address
SADDR	SADDRUM = 0	SADDR = SADDR + SADDRUV
	SADDRUM = 1	SADDR = SADDR - SADDRUV
DADDR	DADDRUM = 0	DADDR = DADDR + DADDRUV
	DADDRUM = 1	DADDR = DADDR - DADDRUV

Note: When the BRNUM[11:0] is 0, the last block transfer is treated as a single block transfer.

Link transfer mode

In link mode, after multi-block/block transmission, the configuration register of the current channel includes MDMA_CHxCFG, MDMA_CHxBTCFG, MDMA_CHxSADDR, MDMA_CHxDADDR, MDMA_CHxMBADDRU, MDMA_CHxLADDR, MDMA_CHxCTL1, MDMA_CHxMADDR and MDMA_CHxMDATA will be load with the data structure at the address LADDR[31:0] defined in the MDMA_CHxLADDR register. As is shown in ***Table 17-5. Register link address***. If TRIGMOD[1:0] in MDMA_CHxCFG register is "11", the channel will accept new requests or continue transmission after the configuration register is loaded.

Table 17-5. Register link address

Register	Link address
MDMA_CHxCFG	LADDR[31:0] + 0x00
MDMA_CHxBTCFG	LADDR[31:0] + 0x04
MDMA_CHxSADDR	LADDR[31:0] + 0x08
MDMA_CHxDADDR	LADDR[31:0] + 0x0C
MDMA_CHxMBADDRU	LADDR[31:0] + 0x10
MDMA_CHxLADDR	LADDR[31:0] + 0x14
MDMA_CHxCTL1	LADDR[31:0] + 0x18
MDMA_CHxMADDR	LADDR[31:0] + 0x20
MDMA_CHxMDATA	LADDR[31:0] + 0x24

If the TRIGSEL[5:0] in the MDMA_CHxCTL1 register changes while loading the channel configuration register, the trigger source will be changed by hardware automatically.

Note: In link transfer mode, the SWREQMOD bit and TRIGMOD[1:0] in the MDMA_CHxCFG register cannot be modified.

17.3.4. Transfer status

Transfer complete

When TBNUM[16:0] in MDMA_CHxBTCFG register, BRNUM[11:0] and LADDR[31:0] in MDMA_CHxLADDR register are all 0, or the channel is disabled (CHEN=0) before the end of transmission, and the remaining data in FIFO are all transferred to the destination, the CHTCF bit in the MDMA_CHxSTAT0 register will be set after the channel transmission is completed.

Transfer interrupt

Transfer interrupt means that the CHEN in the MDMA_CHxCTL0 register is disabled (CHEN=0) during transmission, and the last data transmission is not continued when the channel is enabled again. After the channel is disabled, CHTCF bit in MDMA_CHxSTAT0 register will be set when all the remaining data in FIFO are transferred to the destination. The number of bytes or blocks not transferred can be viewed in TBNUM[16:0], BRNUM[11:0] in the MDMA_CHxBTCFG register.

Transfer pause

Before the TBNUM[16:0] in the MDMA_CHxBTCFG register counts to 0, the CHEN in MDMA_CHxCTL0 register can be cleared to pause the channel transfer. When the CHTCF bit in the MDMA_CHxSTAT0 register is set to 1, it indicates that the remaining data in the FIFO has been transmitted. If the values of MDMA_CHxBTCFG register, MDMA_CHxSADDR register and MDMA_CHxDADDR register are not modified by software, clear the CHTCF bit in MDMA_CHxSTAT0 register and enable the CHEN bit again, then the transmission continues.

Note: When TRIGMOD[1:0] is 11, it is recommended to configure the LADDR field in data structure of the next node as 0 to pause the channel transfer. If the channel transfer is paused by clearing the CHEN in MDMA_CHxCTL0 register, the result will not be guaranteed.

17.3.5. MDMA interrupts and errors

MDMA error flags are shown in *Table 17-6. MDMA error flags*.

Table 17-6. MDMA error flags

Error name	Description
BZERR	Block size error flag
ASERR	Address and size error flag

Error name	Description
MDTERR	Mask data transmission error flag
LDTERR	Link data error flag
ERR	Transmission error flag

The transmission error flag (ERR) will be set when the following occurs:

- A bus error occurred during MDMA read or write access.
- The location of address alignment does not match the size of the data.
- The block size is not a multiple of the data size (source and/or target).

For each MDMA channel, there are five types of interrupt events: channel transfer complete, buffer transfer complete, block transfer complete, multi-block transfer complete, and transfer error.

MDMA_CHxSTAT0 contains the flag bit for each interrupt event, register MDMA_CHxSTATC contains the flag clear bit for each interrupt event, register MDMA_CHxCTL0 contains the enable bit for each interrupt event. As is shown in ***Table 17-7. MDMA interrupt events***.

Table 17-7. MDMA interrupt events

interrupt events	Flag bit	Enable bit	Clear bit
	MDMA_CHxSTAT0	MDMA_CHxCTL0	MDMA_CHxSTATC
channel transfer complete	CHTCF	CHTCIE	CHTCFC
buffer transfer complete	TCF	TCIE	TCFC
block transfer complete	BTCF	BTCIE	BTCFC
multi-block transfer complete	MBTCF	MBTCIE	MBTCFC
transfer error	ERR	ERRIE	ERRC

If at least one of BTCF / MBTCF / CHTCF / ERR / TCF of channel x is set and the corresponding interrupt (BTCIE / MBTCIE / CHTCIE / ERRIE / TCIE) has been enabled, the GIFx in the MDMA_GINTF register will be set. If MDMA interrupt is enabled in the NVIC, an interrupt will be generated.

MDMA interrupt logic is shown in ***Figure 17-7. MDMA interrupt logic***. When any of the interrupt is enabled, and the corresponding interrupt event will generate an interrupt.

Figure 17-7. MDMA interrupt logic

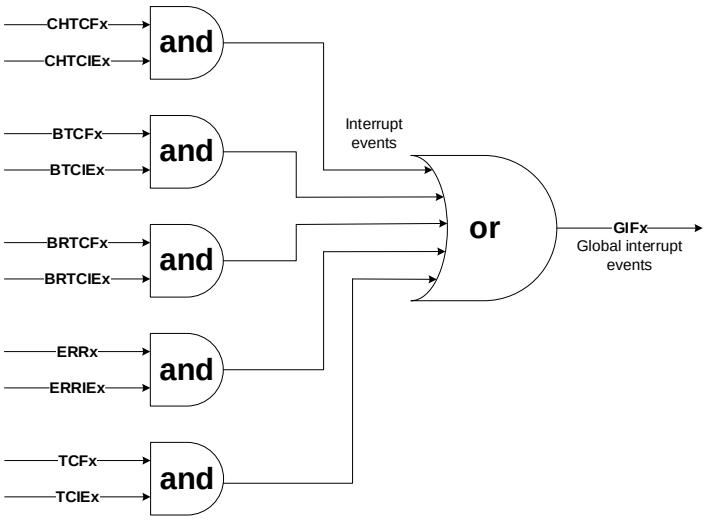

Note: "x" represents the the number of channels (corresponding to x=0...15).

17.4. Register definition

MDMA base address: 0x52000000

17.4.1. Global interrupt flag register (MDMA_GINTF)

Address offset: 0x00

Reset value: 0x0000 0000

This register has to be accessed by byte (8-bit), half-word (16-bit), word (32-bit).

31	30	29	28	27	26	25	24	23	22	21	20	19	18	17	16
Reserved															

15	14	13	12	11	10	9	8	7	6	5	4	3	2	1	0
GIF15	GIF14	GIF13	GIF12	GIF11	GIF10	GIF9	GIF8	GIF7	GIF6	GIF5	GIF4	GIF3	GIF2	GIF1	GIF0
r	r	r	r	r	r	r	r	r	r	r	r	r	r	r	r

Bits	Fields	Descriptions
31:16	Reserved	Must be kept at reset value.
15:0	GIFx	Global interrupt flag of channel x (x=0…15) 0: None flag of BTCF / MBTCF / CHTCF / ERR / TCF of the channel x is set, or the flag bit is set but its corresponding interrupt is disabled. 1: At least one of BTCF / MBTCF / CHTCF / ERR / TCF bit of channel x is set and the corresponding interrupt (BTCIE / MBTCIE / CHTCIE / ERRIE / TCIE) has been enabled.

17.4.2. Channel x status register 0 (MDMA_CHxSTAT0)

x = 0...15, where x is a channel number

Address offset: 0x40 + 0x40 × x

Reset value: 0x0000 0000

This register has to be accessed by byte (8-bit), half-word (16-bit), word (32-bit).

31	30	29	28	27	26	25	24	23	22	21	20	19	18	17	16
Reserved															REQAF
															r

15	14	13	12	11	10	9	8	7	6	5	4	3	2	1	0
Reserved											TCF	BTCF	MBTCF	CHTCF	ERR
											r	r	r	r	r

Bits	Fields	Descriptions
31:17	Reserved	Must be kept at reset value.

16	REQAF	Channel x request active flag If the SWREQ bit in MDMA_CHxCTL0 is set, and CHEN is enabled, this bit will be set. When the request of channel x is completed, this bit is cleared by hardware. 0: Transmission of MDMA channel x is not actived. 1: Transmission of MDMA channel x is actived.
15:5	Reserved	Must be kept at reset value.
4	TCF	Channel x buffer transfer complete flag This bit is set by hardware, and cleared by writing 1 to the corresponding bit in MDMA_CHxSTATC register. 0: Buffer transfer of channel x is not completed. 1: Buffer transfer of channel x is completed.
3	BTCF	Channel x block transfer complete flag This bit is set by hardware, and cleared by writing 1 to the corresponding bit in MDMA_CHxSTATC register. 0: Block transfer of channel x is not completed. 1: Block transfer of channel x is completed.
2	MBTCF	Channel x multi-block transfer complete flag This bit is set by hardware, and cleared by writing 1 to the corresponding bit in MDMA_CHxSTATC register. 0: Multi-block transfer of channel x is not completed. 1: Multi-block transfer of channel x is completed.
1	CHTCF	Channel x channel transfer complete flag This bit is set by hardware, and cleared by writing 1 to the corresponding bit in MDMA_CHxSTATC register. 0: Channel transfer of channel x is not completed. 1: Channel transfer of channel x is completed.
0	ERR	Channel x transfer error flag This bit is set by hardware, and cleared by writing 1 to the corresponding bit in MDMA_CHxSTATC register. 0: No transmission error occurred on channel x. 1: Transmission error occurred on channel x.

17.4.3. Channel x status clear register (MDMA_CHxSTATC)

x = 0...15, where x is a channel number

Address offset: 0x44 + 0x40 × x

Reset value: 0x0000 0000

This register has to be accessed by byte (8-bit), half-word (16-bit), word (32-bit).

31	30	29	28	27	26	25	24	23	22	21	20	19	18	17	16
Reserved															

15	14	13	12	11	10	9	8	7	6	5	4	3	2	1	0
Reserved											TCFC	BTCFC	MBTCFC	CHTCFC	ERRC
											w	w	w	w	w

Bits	Fields	Descriptions
31:5	Reserved	Must be kept at reset value.
4	TCFC	Channel x buffer transfer complete flag clear 0: No effect. 1: Clear the TCF bit in the MDMA_CHxSTAT0 register by writing 1 to this bit.
3	BTCFC	Channel x buffer block transfer complete flag clear 0: No effect. 1: Clear the BTCF bit in the MDMA_CHxSTAT0 register by writing 1 to this bit.
2	MBTCFC	Channel x buffer multi-block transfer complete flag clear 0: No effect. 1: Clear the MBTCF bit in the MDMA_CHxSTAT0 register by writing 1 to this bit.
1	CHTCFC	Channel x channel transfer complete flag clear 0: No effect. 1: Clear the CHTCF bit in the MDMA_CHxSTAT0 register by writing 1 to this bit.
0	ERRC	Channel x transfer error flag clear 0: No effect. 1: Clear the ERR bit in the MDMA_CHxSTAT0 register by writing 1 to this bit.

17.4.4. Channel x status register 1 (MDMA_CHxSTAT1)

x = 0...15, where x is a channel number

Address offset: 0x48 + 0x40 × x

Reset value: 0x0000 0000

This register has to be accessed by byte (8-bit), half-word (16-bit), word (32-bit).

31	30	29	28	27	26	25	24	23	22	21	20	19	18	17	16
Reserved															

15	14	13	12	11	10	9	8	7	6	5	4	3	2	1	0
Reserved				BZERR	ASERR	MDTERR	LDTERR	TERRD	ERRADDR[6:0]						
				r	r	r	r	r				r			

Bits	Fields	Descriptions
31:12	Reserved	Must be kept at reset value.
11	BZERR	Block size error flag

		When the block size is not an integer multiple of the source or destination data size, this bit will be set by hardware. And this bit is cleared by writing 1 to ERRC bit in MDMA_CHxSTATC register. 0: No block size error is occurred. 1: Block size error is occurred.
10	ASERR	Address and size error flag If the address does not match the data size, the bit will be set by hardware. And this bit is cleared by writing 1 to ERRC bit in MDMA_CHxSTATC register. 0: No address and size error is occurred. 1: Address and size error is occurred.
9	MDTERR	Mask data error flag This bit is set by the hardware when an error occurs while writing the mask data. And this bit is cleared by writing 1 to ERRC bit in MDMA_CHxSTATC register. 0: No mask data error is occurred. 1: Mask data error is occurred.
8	LDTERR	Link data transfer error flag in the last transfer of the channel The bit is set by hardware when an error occurrs while reading the link data structure. And this bit is cleared by writing 1 to ERRC bit in MDMA_CHxSTATC register. 0: No link data error is occurred. 1: Link data error is occurred.
7	TERRD	Transfer error direction This bit is set by the hardware when a transmission error occurs on the channel due to write access. 0: Read access error. 1: Write access error.
6:0	ERRADDR[6:0]	Transfer error address When a transfer error occurs, these bits store the low 7 bits of the error address. And the absolute error address is ERRADDR + SADDR/DADDR. **Note:** These bits are ignored when link data error is occurred.

17.4.5. Channel x control register 0 (MDMA_CHxCTL0)

x = 0...15, where x is a channel number

Address offset: 0x4C + 0x40 × x

Reset value: 0x0000 0000

This register has to be accessed by byte (8-bit), half-word (16-bit), word (32-bit).

31	30	29	28	27	26	25	24	23	22	21	20	19	18	17	16
Reserved															SWREQ
															w

15	14	13	12	11	10	9	8	7	6	5	4	3	2	1	0
Reserved	WES	HWES	BES	Reserved			SMODEN	PRIO[1:0]		TCIE	BTCIE	MBTCIE	CHTCIE	ERRIE	CHEN
	rw	rw	rw				rw	rw		rw	rw	rw	rw	rw	rw

Bits	Fields	Descriptions
31:17	Reserved	Must be kept at reset value.
16	SWREQ	Software request When the channel is enabled, request for channel x can be activated by setting this bit. And the REQAF bit in the MDMA_CHxSTAT0 register will be set.
15	Reserved	Must be kept at reset value.
14	WES	Word endianess swapping in double word 0: The order of the words is not exchanged in a double word, preserving the little endian order. 1: Exchange the order of the words in a double word. **Note:** If the destination is not a double word, the bit is ignored. When the channel is enabled (CHEN=1), this bit cannot be modified.
13	HWES	Half word endianess swapping in word 0: The order of the half-words is not exchanged in a word, preserving the little endian order. 1: Exchange the order of the half-words in a word. **Note:** If the destination is not a word or double word, the bit is ignored. When the channel is enabled (CHEN=1), this bit cannot be modified.
12	BES	Byte endianess swapping in half word 0: The order of the bytes is not exchanged in a half-word, preserving the little endian order. 1: Exchange the order of the bytes in a half-word. **Note:** If the destination is not a half-word, word or double word, the bit is ignored. When the channel is enabled (CHEN=1), this bit cannot be modified.
11:9	Reserved	Must be kept at reset value.
8	SMODEN	Secure mode enable 0: Secure mode disable 1: Secure mode enable This bit can only be written when the AHB slave port is in secure mode. If SMODEN is 0, all registers of the current channel can be written. If SMODEN is 1, all registers of the current channel are write protected. **Note:** When the channel is enabled (CHEN=1), this bit cannot be modified.
7:6	PRIO[1:0]	Priority level Software set and cleared 00: Low

		01: Medium 10: High 11: Ultra high **Note:** When the channel is enabled (CHEN=1), these bits cannot be modified.
5	TCIE	Buffer transfer complete interrupt enable This bit is set and cleared by software. 0: Buffer transfer complete interrupt disable. 1: Buffer transfer complete interrupt enable.
4	BTCIE	Block transfer complete interrupt enable This bit is set and cleared by software. 0: Block transfer complete interrupt disable. 1: Block transfer complete interrupt enable.
3	MBTCIE	Multi-block transfer complete interrupt enable This bit is set and cleared by software. 0: Multi-block transfer complete interrupt disable. 1: Multi-block transfer complete interrupt enable.
2	CHTCIE	Channel transfer complete interrupt enable This bit is set and cleared by software. 0: Channel transfer complete interrupt disable. 1: Channel transfer complete interrupt enable.
1	ERRIE	Transfer error interrupt enable This bit is set and cleared by software. 0: Transfer error interrupt disable. 1: Transfer error interrupt enable.
0	CHEN	Channel enable This bit is set and cleared by software. 0: channel disable 1: channel enable **Note:** This bit will be cleared by hardware when the MDMA transfer is completed, or AHB/AXI bus error, BZERR or ASERR is occurred.

17.4.6. Channel x configure register (MDMA_CHxCFG)

x = 0...15, where x is a channel number

Address offset: 0x50 + 0x40 × x

Reset value: 0x0000 0000

This register has to be accessed by byte (8-bit), half-word (16-bit), word (32-bit).

31	30	29	28	27	26	25	24	23	22	21	20	19	18	17	16
BWMOD	SWREQ MOD	TRIGMOD[1:0]		PAMOD[1:0]		PKEN	BTLEN[6:0]							DBURST[2:1]	

rw	rw	rw	rw	rw	rw	rw	rw
15	14 13 12	11 10	9 8	7 6	5 4	3 2	1 0
DBURST[0]	SBURST[2:0]	DIOS[1:0]	SIOS[1:0]	DWIDTH[1:0]	SWIDTH[1:0]	DIMOD[1:0]	SIMOD[1:0]
rw	rw	rw	rw	rw	rw	rw	rw

Bits	Fields	Descriptions
31	BWMOD	Bufferable write mode This bit is set and cleared by software. 0: Bufferable write mode disable. 1: Bufferable write mode enable. **Note:** When the channel is enabled (CHEN=1), this bit cannot be modified.
30	SWREQMOD	Software request mode This bit is set and cleared by software. 0: Responds to software requests and hardware requests. 1: Responds to software requests. **Note:** Changing this bit will take effect after the current transmission is completed.
29:28	TRIGMOD[1:0]	Trigger mode This bit is set and cleared by software. 00: A software request or a hardware request triggers a buffer transfer. 01: A software request or a hardware request triggers a block transfer. 10: A software request or a hardware request triggers a multi-block transfer. 11: A software request or a hardware request triggers a complete data transfer (for example, link mode). **Note:** When the channel is enabled (CHEN=1), these bits cannot be modified.
27:26	PAMOD[1:0]	Padding and alignement mode This bit is set and cleared by software.

size of the source data is larger than that of the destination data		size of the source data is less than that of the destination data	
00	Right aligned, write the low byte of the source to the destination address, and the high byte is discarded.	00	Right aligned, zero for the missing bits.
01	Reserved	01	Right aligned, symbol extension.
10	Reserved Left aligned, the high byte of the source is written to the target address, and the low byte is discarded.	10	Left aligned, zero for the missing bits.

11	Reserved	11	Reserved

Note: When the packet is enabled (PKEN=1) or the source data size is equal to the destination data size, these bits is invalid. When the channel is enabled (CHEN=1), these bits cannot be modified.

25 PKEN

Pack enable

This bit is set and cleared by software.

0: The source data is written to the destination address according to the configuration of PAMOD[1:0].

1: Pack/unpack the source data to match the destination data size.

Note: When the channel is enabled (CHEN=1), this bit cannot be modified.

24:18 BTLEN[6:0]

Buffer transfer length

This bit is set and cleared by software.

The number of bytes to be transferred at a time is BTLEN+1.

Note: BTLEN must be a multiple of DWIDTH and SWIDTH.

17:15 DBURST[2:0]

Transfer burst type of destination

This bit is set and cleared by software.

000: single burst.

001: 2-beat incrementing burst.

010: 4-beat incrementing burst.

011: 8-beat incrementing burst.

100: 16-beat incrementing burst.

101: 32-beat incrementing burst.

110: 64-beat incrementing burst.

111: 128-beat incrementing burst.

Note: When the channel is enabled (CHEN=1), these bits cannot be modified.

14:12 SBURST[2:0]

Transfer burst type of source

These bits are set and cleared by software.

000: single burst.

001: 2-beat incrementing burst.

010: 4-beat incrementing burst.

011: 8-beat incrementing burst.

100: 16-beat incrementing burst.

101: 32-beat incrementing burst.

110: 64-beat incrementing burst.

111: 128-beat incrementing burst.

Note: When the channel is enabled (CHEN=1), these bits cannot be modified.

11:10 DIOS[1:0]

Offset size of destination increment

These bits are set and cleared by software.

00: 8-bit

01: 16-bit

10: 32-bit

		11: 64-bit **Note:** When the channel is enabled (CHEN=1), these bits cannot be modified. If DIOS < DWIDTH and DIMOD is not 00, the result will be unpredictable.
9:8	SIOS[1:0]	Offset size of source increment These bits are set and cleared by software. 00: 8-bit 01: 16-bit 10: 32-bit 11: 64-bit **Note:** When the channel is enabled (CHEN=1), these bits cannot be modified. If SIOS < SWIDTH and SIMOD is not 00, the result will be unpredictable.
7:6	DWIDTH[1:0]	Data size of destination These bits are set and cleared by software. 00: 8-bit 01: 16-bit 10: 32-bit 11: 64-bit **Note:** When the channel is enabled (CHEN=1), these bits cannot be modified.
5:4	SWIDTH[1:0]	Data size of source These bits are set and cleared by software. 00: 8-bit 01: 16-bit 10: 32-bit 11: 64-bit **Note:** When the channel is enabled (CHEN=1), these bits cannot be modified.
3:2	DIMOD[1:0]	Destination increment mode These bits are set and cleared by software. 00: No increment. 01: Reserved. 10: The increment of destination address is DIOS. 11: The decrement of destination address is DIOS. **Note:** When the channel is enabled (CHEN=1), these bits cannot be modified.
1:0	SIMOD[1:0]	Source increment mode These bits are set and cleared by software. 00: No increment. 01: Reserved. 10: The increment of source address is SIOS. 11: The decrement of source address is SIOS. **Note:** When the channel is enabled (CHEN=1), these bits cannot be modified.

17.4.7. Channel x block transfer configure register (MDMA_CHxBTCFG)

x = 0...15, where x is a channel number

Address offset: 0x54 + 0x40 × x

Reset value: 0x0000 0000

This register has to be accessed by byte (8-bit), half-word (16-bit), word (32-bit).

31	30	29	28	27	26	25	24	23	22	21	20	19	18	17	16
BRNUM[11:0]												DADDRUM	SADDRUM	Reserved	TBNUM[16]
rw												rw	rw		rw

15	14	13	12	11	10	9	8	7	6	5	4	3	2	1	0
TBNUM[15:0]															
rw															

Bits	Fields	Descriptions
31:20	BRNUM[11:0]	Multi-block number **Note:** When the channel is enabled (CHEN=1), these bits cannot be modified.
19	DADDRUM	Multi-block destination address update mode 0: DADDR = DADDR + DADDRUV 1: DADDR = DADDR – DADDRUV **Note:** When the channel is enabled (CHEN=1), this bit cannot be modified.
18	SADDRUM	Multi-block source address update mode 0: SADDR = SADDR + SADDRUV 1: SADDR = SADDR - SADDRUV **Note:** When the channel is enabled (CHEN=1), this bit cannot be modified.
17	Reserved	Must be kept at reset value.
16:0	TBNUM[16:0]	Transfer byte number in block Number of bytes for the current block to be transferred (0-65536). In Multi-block mode, when the block transfer is completed, these bits will be reloaded with the value of the first transfer automatically. **Note:** When the channel is enabled (CHEN=1), these bits cannot be modified. TBNUM must be an integer multiple of the source and target data sizes.

17.4.8. Channel x source address register (MDMA_CHxSADDR)

x = 0...15, where x is a channel number

Address offset: 0x58 + 0x40 × x

Reset value: 0x0000 0000

This register has to be accessed by byte (8-bit), half-word (16-bit), word (32-bit).

31	30	29	28	27	26	25	24	23	22	21	20	19	18	17	16

SADDR[31:16]
rw

15	14	13	12	11	10	9	8	7	6	5	4	3	2	1	0
SADDR[15:0]															
rw															

Bits	Fields	Descriptions
31:0	SADDR[31:0]	Source address

17.4.9. Channel x destination address register (MDMA_CHxDADDR)

x = 0...15, where x is a channel number

Address offset: 0x5C + 0x40 × x

Reset value: 0x0000 0000

This register has to be accessed by byte (8-bit), half-word (16-bit), word (32-bit).

31	30	29	28	27	26	25	24	23	22	21	20	19	18	17	16
DADDR[31:16]															
rw															

15	14	13	12	11	10	9	8	7	6	5	4	3	2	1	0
DADDR[15:0]															
rw															

Bits	Fields	Descriptions
31:0	DADDR[31:0]	Destination address

17.4.10. Channel x multi-block address update register (MDMA_CHxMBADDRU)

x = 0...15, where x is a channel number

Address offset: 0x60 + 0x40 × x

Reset value: 0x0000 0000

This register has to be accessed by byte (8-bit), half-word (16-bit), word (32-bit).

31	30	29	28	27	26	25	24	23	22	21	20	19	18	17	16
DADDRUV[15:0]															
rw															

15	14	13	12	11	10	9	8	7	6	5	4	3	2	1	0
SADDRUV[15:0]															
rw															

Bits	Fields	Descriptions
31:16	DADDRUV[15:0]	Destination address update value These bits are used to configure the increment or decrement of the destination address after the block transfer is completed. To align DADDR with DWIDTH, the

		value of these bits must be an integer multiple of DWIDTH. When BRNUM=0, these bits are invalid. **Note:** When the channel is enabled (CHEN=1), these bits cannot be modified.
15:0	SADDRUV[15:0]	Source address update value These bits are used to configure the increment or decrement of the source address after the block transfer is completed. To align SADDR with SWIDTH, the value of these bits must be an integer multiple of SWIDTH. When BRNUM=0, these bits are invalid. **Note:** When the channel is enabled (CHEN=1), these bits cannot be modified.

17.4.11. Channel x link address register (MDMA_CHxLADDR)

x = 0...15, where x is a channel number

Address offset: 0x64 + 0x40 × x

Reset value: 0x0000 0000

This register has to be accessed by byte (8-bit), half-word (16-bit), word (32-bit).

31	30	29	28	27	26	25	24	23	22	21	20	19	18	17	16
LADDR[31:16]															
rw															

15	14	13	12	11	10	9	8	7	6	5	4	3	2	1	0
LADDR[15:0]															
rw															

Bits	Fields	Descriptions
31:0	LADDR[31:0]	Link address If the value of these bits is not 0, after multi-block/block transmission, the configuration register of the current channel includes MDMA_CHxCFG, MDMA_CHxBTCFG, MDMA_CHxSADDR, MDMA_CHxDADDR, MDMA_CHxMBADDRU, MDMA_CHxLADDR, MDMA_CHxCTL1, MDMA_CHxMADDR and MDMA_CHxMDATA will be load with the data structure at the address LADDR[31:0] defined in the MDMA_CHxLADDR register. If the value of these bits is 0, CHTCF bit in MDMA_CHxSTAT0 register will be set, and the CHEN bit will be cleared by hardware. **Note:** 1. When the channel is enabled (CHEN=1), these bits cannot be modified. 2. LADDR[31:0] must be double word aligned.

17.4.12. Channel x control register 1 (MDMA_CHxCTL1)

x = 0...15, where x is a channel number

Address offset: 0x68 + 0x40 × x

Reset value: 0x0000 0000

This register has to be accessed by byte (8-bit), half-word (16-bit), word (32-bit).

31	30	29	28	27	26	25	24	23	22	21	20	19	18	17	16
Reserved														DBSEL	SBSEL
														rw	rw

15	14	13	12	11	10	9	8	7	6	5	4	3	2	1	0
Reserved										TRIGSEL[5:0]					
												rw			

Bits	Fields	Descriptions
31:18	Reserved	Must be kept at reset value.
17	DBSEL	Destination bus select This bit is used to configure the destination bus for the selected channel x during write operations. 0: The destination bus of channel x is the system bus or AXI bus. 1: The destination bus of channel x is AHB bus or TCM. **Note:** When the channel is enabled (CHEN=1), this bit cannot be modified.
16	SBSEL	Source bus select This bit is used to configure the source bus for the selected channel x during write operations. 0: The source bus of channel x is the system bus or AXI bus. 1: The source bus of channel x is AHB bus or TCM. **Note:** When the channel is enabled (CHEN=1), this bit cannot be modified.
15:6	Reserved	Must be kept at reset value.
5:0	TRIGSEL[5:0]	Trigger select This bit field is used to select the hardware trigger source for channel x. If the SWREQMOD bit is 1, this bit is ignored. **Note:** When the channel is enabled (CHEN=1), this bit cannot be modified.

17.4.13. Channel x mask address register (MDMA_CHxMADDR)

x = 0...15, where x is a channel number

Address offset: 0x70 + 0x40 × x

Reset value: 0x0000 0000

This register has to be accessed by byte (8-bit), half-word (16-bit), word (32-bit).

31	30	29	28	27	26	25	24	23	22	21	20	19	18	17	16
MADDR[31:16]															
rw															

15	14	13	12	11	10	9	8	7	6	5	4	3	2	1	0
MADDR[15:0]															
rw															

Bits	Fields	Descriptions

31:0	MADDR[31:0]	Mask address When the bit field is not 0, the DMA request is acknowledged by writing the MDATA value in the MDMA_CHxMDATA register to the address specified by MADDR.

17.4.14. Channel x mask data register (MDMA_CHxMDATA)

x = 0...15, where x is a channel number

Address offset: 0x74 + 0x40 × x

Reset value: 0x0000 0000

This register has to be accessed by byte (8-bit), half-word (16-bit), word (32-bit).

31	30	29	28	27	26	25	24	23	22	21	20	19	18	17	16
MDATA[31:16]															
rw															

15	14	13	12	11	10	9	8	7	6	5	4	3	2	1	0
MDATA[15:0]															
rw															

Bits	Fields	Descriptions
31:0	MDATA[31:0]	Mask data

18. DMA request multiplexer (DMAMUX)

18.1. Overview

DMAMUX is a transmission scheduler for DMA requests. The DMAMUX request multiplexer is used for routing a DMA request line between the peripherals / generated DMA request (from the DMAMUX request generator) and the DMA controller. Each DMAMUX request multiplexer channel selects a unique DMA request line, unconditionally or synchronously with events from its DMAMUX synchronization inputs. The DMA request is pending until it is served by the DMA controller which generates a DMA acknowledge signal (the DMA request signal is de-asserted).

18.2. Characteristics

- 16 channels for DMAMUX request multiplexer.
- 8 channels for DMAMUX request generator.
- Support 35 trigger inputs.
- Support 29 synchronization inputs.
- Each DMAMUX request generator channel has a DMA request trigger input selector, a DMAMUX request generator counter, and the trigger overrun flag.
- Each DMAMUX request multiplexer channel has 189 input DMA request lines from peripherals, a synchronization input selector, one DMA request line output, one channel event output for DMA request chaining, a DMAMUX request multiplexer counter, and the synchronization overrun flag.

18.3. Block diagram

Figure 18-1. Block diagram of DMAMUX

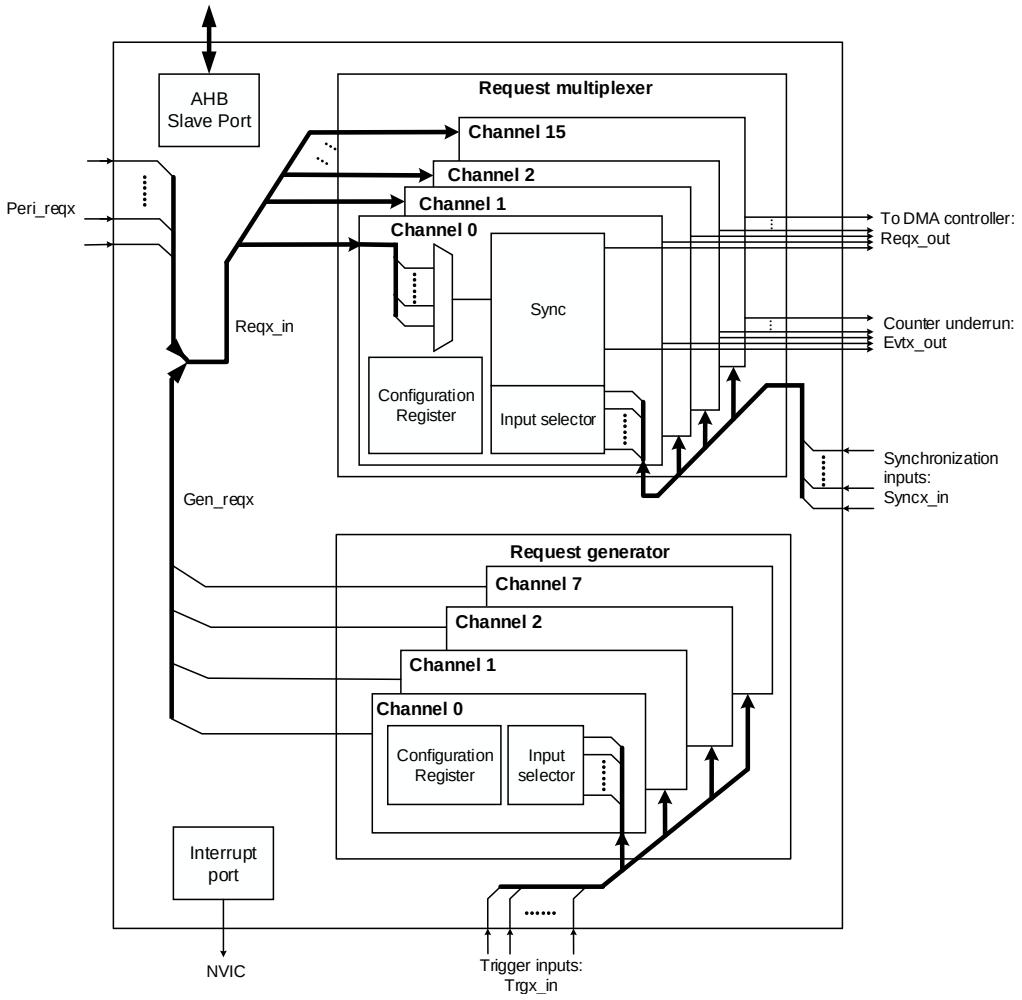

18.4. Signal description

The DMAMUX signals are described as follows:

- Reqx_in: DMAMUX request multiplexer inputs from peripheral requests and request generator channels.
- Peri_reqx: DMAMUX DMA request line inputs from peripherals.
- Gen_reqx: DMAMUX generated DMA request from request generator.
- Reqx_out: DMAMUX requests outputs to DMA controller.
- Trgx_in: DMAMUX DMA request triggers inputs to request generator.
- Syncx_in: DMAMUX synchronization inputs to request multiplexer.
- Evtx_out: DMAMUX request multiplexer counter underrun event outputs.

18.5. Function overview

As shown in ***Figure 18-1. Block diagram of DMAMUX***, DMAMUX includes two sub-blocks:

- DMAMUX request multiplexer.
  DMAMUX request multiplexer inputs (Reqx_in) source from:
  - Peripherals (Peri_reqx).
  - DMAMUX request generator outputs (Gen_reqx).

  DMAMUX request multiplexer outputs (Reqx_out) is connected to channels of DMA controller.
  Synchronization inputs (Syncx_in) source from internal or external signals.
- DMAMUX request generator.
  Trigger inputs (Trgx_in) source from internal or external signals.

18.5.1. DMAMUX request multiplexer

The DMAMUX request multiplexer enables routing a DMA request line between the peripherals / generated DMA request and the DMA controllers of the product. Its component unit is the request multiplexer channels. DMA request lines are connected in parallel to all request multiplexer channels. There is a synchronization unit for each request multiplexer channel. The synchronization inputs are connected in parallel to all synchronization unit of request multiplexer channels. And there is a built-in DMAMUX request multiplexer counter for each request multiplexer channel.

Request multiplexer channel

A DMA request input for the DMAMUX request multiplexer channel x is configured by the MUXID[7:0] bits in the DMAMUX_RM_CHxCFG register, sourced either from the peripherals or from the DMAMUX request generator, the sources can refer to ***Table 18-2. Request multiplexer input mapping***. A DMAMUX request multiplexer channel is connected and dedicated to one single channel of the DMA controller.

Note: The value 0 of MUXID[7:0] bits corresponds to no DMA request line is selected. It is not allowed to configure the same DMA request line (same non-null MUXID[7:0]) to two different request multiplexer channels.

When synchronization mode is disabled

Each time the connected DMAMUX request is served by the DMA controller, the served DMA request is de-asserted, and the built-in DMAMUX request multiplexer counter is decremented. At the request multiplexer counter underrun, the built-in DMAMUX request multiplexer counter is automatically loaded with the value in NBR[4:0] bits of the DMAMUX_RM_CHxCFG register. If the channel event generation is enabled by setting EVGEN bit, the number of DMA requests before an output event generation is NBR[4:0] + 1.

Note: The NBR[4:0] bits value shall only be written by software when both synchronization enable bit SYNCEN and event generation enable EVGEN bit of the corresponding request multiplexer channel x are disabled.

When synchronization mode is enabled

A channel x in synchronization mode, when a rising/falling edge on the selected synchronization input is detected, the pending selected input DMA request line is routed to the multiplexer channel x output. Each time the connected DMAMUX request is served by the DMA controller, the served DMA request is de-asserted, and the built-in DMAMUX request multiplexer counter is decremented. At the request multiplexer counter underrun, the input DMA request line is disconnected from the request multiplexer channel x output, and the built-in DMAMUX request multiplexer counter is automatically loaded with the value in NBR[4:0] bits of the DMAMUX_RM_CHxCFG register. The number of DMA requests transferred to the request multiplexer channel x output following a detected synchronization event is NBR[4:0] + 1.

Figure 18-2. Synchronization mode shows an example when NBR[4:0]=4, SYNCEN=1, EVGEN=1, SYNCP[1:0]=01.

Figure 18-2. Synchronization mode

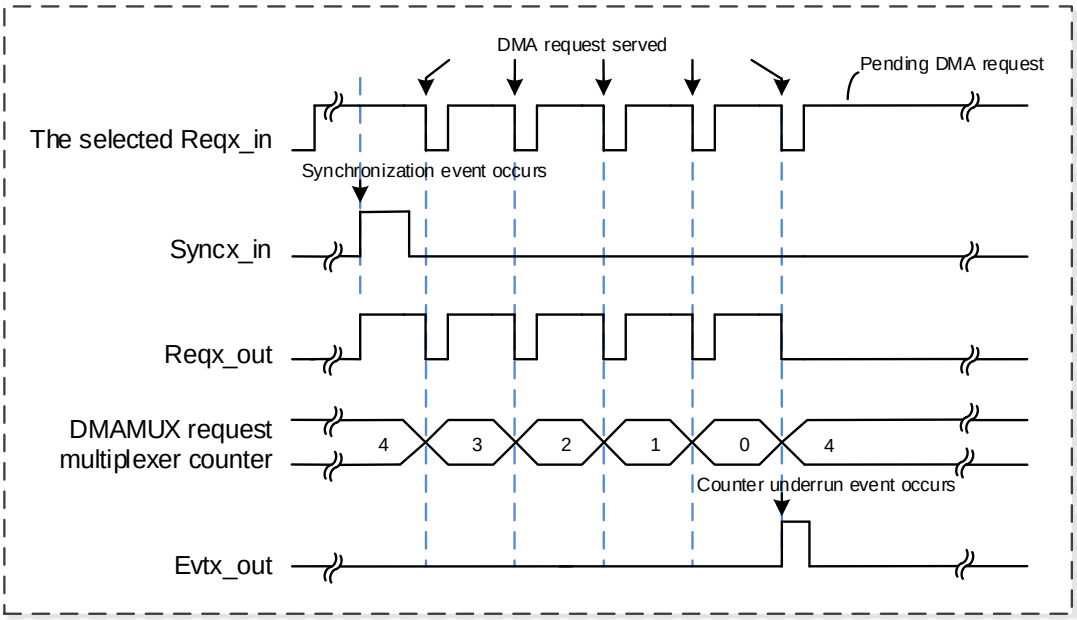

DMAMUX request multiplexer channel x can be synchronized by setting the synchronization enable bit SYNCEN in the DMAMUX_RM_CHxCFG register. The synchronization input is selected by SYNCID[4:0] bits in the DMAMUX_RM_CHxCFG register, the sources can refer to ***Table 18-4. Synchronization input mapping***. The synchronization input valid edge is configured by the SYNCP[1:0] bits of the DMAMUX_RM_CHxCFG register.

Note: If a synchronization input event occurs when there is no pending selected input DMA request line, the input event is discarded. The following asserted input request lines will not

be routed to the DMAMUX multiplexer channel output until a synchronization input event occurs again.

Channel event generation

Each DMA request line multiplexer channel has an event output called Evtx_out, which is the DMA request multiplexer counter underrun event. Signals Evt0_out ~ Evt3_out can be used for DMA request chaining. If event generation bit EVGEN in the DMAMUX_RM_CHxCFG register is enabled on the channel x output, when its DMA request multiplexer counter is automatically reloaded with the value of the programmed NBR[4:0] field, the multiplexer channel generates a channel event, as a pulse of one AHB clock cycle.

Figure 18-3. Event generation shows an example when NBR[4:0]=4, SYNCEN=0, EVGEN=1.

Figure 18-3. Event generation

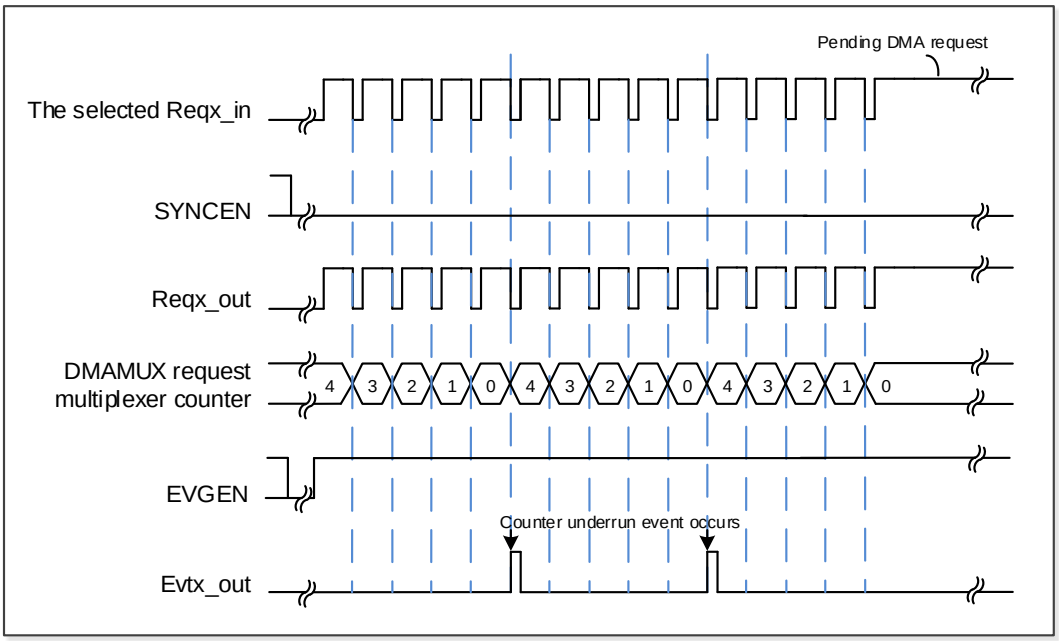

Note: If EVGEN = 1 and NBR[4:0] = 0, an event is generated after each served DMA request.

Synchronization overrun

If a new synchronization event occurs before the built-in DMAMUX request multiplexer counter underrun, the synchronization overrun flag bit SOIFx is set in the DMAMUX_RM_INTF register.

Note: The synchronization mode of request multiplexer channel x shall be disabled by resetting SYNCEN bit in DMAMUX_RM_CHxCFG register at the completion of the use of the related channel of the DMA controller. Otherwise, when a new synchronization event occurs, there will be a synchronization overrun due to the absence of a DMA acknowledge (that is, no served request) received from the DMA controller.

18.5.2. DMAMUX request generator

The DMAMUX request generator produces DMA requests upon trigger input event. Its component unit is the request generator channels. DMA request trigger inputs are connected in parallel to all request generator channels. And there is a built-in DMAMUX request generator counter for each request generator channel.

The active edge of trigger input events is selected through the RGTP[1:0] bits in DMAMUX_RG_CHxCFG register. The DMA request trigger input for the DMAMUX request generator channel x is selected through the TID[5:0] bits in DMAMUX_RG_CHxCFG register, the sources can refer to ***Table 18-3. Trigger input mapping***. DMAMUX request generator channel x can be enabled by setting RGEN to 1 in DMAMUX_RG_CHxCFG register.

Request generator channel

Upon the trigger input event, the corresponding request generator channel starts generating DMA requests on its output, and the output goes to the input of the DMAMUX request multiplexer. Each time the DMAMUX generated request is served by the connected DMA controller, the served request will be de-asserted, and the built-in DMAMUX request generator counter of the request generator channel is decremented. At the request generator counter underrun, the request generator channel stops generating DMA requests. The built-in DMAMUX request generator counter will be automatically reloaded to its programmed value upon the next trigger input event, the built-in counter is programmed by the NBRG[4:0] bits of the DMAMUX_RG_CHxCFG register.

Note: The number of generated DMA requests after the trigger input event is NBRG[4:0] + 1. The NBRG[4:0] value shall only be written by software when the RGEN bit of the corresponding generator channel x is disabled.

Trigger overrun

If a request generator channel x was enabled by RGEN bit, when a new DMA request trigger event for the request generator channel x occurs before the DMAMUX request generator counter underrun, then the request trigger overrun event flag bit TOIFx is set by hardware in the DMAMUX_RG_INTF register.

Note: The request generator channel x shall be disabled by resetting RGEN bit in DMAMUX_RG_CHxCFG register at the completion of the usage of the related channel of the DMA controller. Otherwise, when a new detected trigger event occurs, there will be a trigger overrun due to the absence of an acknowledge (that is, no served request) received from the DMA.

18.5.3. Channel configurations

The following sequence should be followed to configure a DMAMUX channel y and the related DMA channel x:

1. Set and configure the DMA channel x completely, except enabling the channel x.
2. Set and configure the related DMAMUX channel y completely.
3. Configure the CHEN bit with '1' in the DMA_CHxCTL register to enable the DMA channel x.

18.5.4. Interrupt

There are two types of interrupt event, including synchronization overrun event on each DMAMUX request multiplexer channel, and trigger overrun event on each DMAMUX request generator channel.

Each interrupt event has a dedicated flag bit, a dedicated clear bit, and a dedicated enable bit. The relationship is described in the following ***Table 18-1. Interrupt events***.

Table 18-1. Interrupt events

Interrupt event	Flag bit	Clear bit	Enable bit
Synchronization overrun event on DMAMUX request multiplexer channel x	SOIFx in DMAMUX_RM_INTF register	SOIFCx in DMAMUX_RM_INTC register	SOIE in DMAMUX_RM_CHxCFG register
Trigger overrun event on DMAMUX request generator channel y	TOIFy in DMAMUX_RG_INTF register	TOIFCy in DMAMUX_RG_INTC register	TOIE in DMAMUX_RG_CHxCFG register

Trigger overrun interrupt

When the DMAMUX request trigger overrun flag TOIFx is set, and the trigger overrun interrupt is enabled by setting TOIE bit, a trigger overrun interrupt will be generated. The overrun flag TOIFx is reset by writing 1 to the corresponding clear bit of overrun flag TOIFCx in the DMAMUX_RG_INTC register.

Synchronization overrun interrupt

When the synchronization overrun flag SOIFx is set, and the synchronization overrun interrupt is enabled by setting SOIE bit, a synchronization overrun interrupt will be generated. The overrun flag SOIFx is reset by writing 1 to the corresponding clear bit of synchronization overrun flag bit SOIFCx in the DMAMUX_RM_INTC register.

18.5.5. DMAMUX mapping

DMAMUX is used with DMA0 and DMA1. Channel 0 to 7 of DMAMUX are connected to channel 0 to 7 of DMA0, channel 8 to 15 of DMAMUX are connected to channel 0 to 7 of DMA1.

Request multiplexer input mapping

A DMA request is sourced either from the peripherals or from the DMAMUX request generator, the sources can refer to ***Table 18-2. Request multiplexer input mapping***, configured by the MUXID[7:0] bits in the DMAMUX_RM_CHxCFG register for the DMAMUX request multiplexer channel x.

Table 18-2. Request multiplexer input mapping

Request multiplexer channel input identification MUXID[7:0]	Source
1	Gen_req0
2	Gen_req1
3	Gen_req2
4	Gen_req3
5	Gen_req4
6	Gen_req5
7	Gen_req6
8	Gen_req7
9	ADC0
10	ADC1
11	TIMER0_CH0
12	TIMER0_CH1
13	TIMER0_CH2
14	TIMER0_CH3
15	TIMER0_MCH0
16	TIMER0_MCH1
17	TIMER0_MCH2
18	TIMER0_MCH3
19	TIMER0_UP
20	TIMER0_TRG
21	TIMER0_CMT
22	TIMER1_CH0
23	TIMER1_CH1
24	TIMER1_CH2
25	TIMER1_CH3
26	TIMER1_UP
27	TIMER1_TRG
28	Reserved
29	TIMER2_CH0
30	TIMER2_CH1
31	TIMER2_CH2
32	TIMER2_CH3

Request multiplexer channel input identification MUXID[7:0]	Source
33	TIMER2_UP
34	Reserved
35	TIMER2_TRG
36	TIMER3_CH0
37	TIMER3_CH1
38	TIMER3_CH2
39	TIMER3_CH3
40	Reserved
41	TIMER3_TRG
42	TIMER3_UP
43	I2C0_RX
44	I2C0_TX
45	I2C1_RX
46	I2C1_TX
47	SPI0_RX
48	SPI0_TX
49	SPI1_RX
50	SPI1_TX
51	USART0_RX
52	USART0_TX
53	USART1_RX
54	USART1_TX
55	USART2_RX
56	USART2_TX
57	TIMER7_CH0
58	TIMER7_CH1
59	TIMER7_CH2
60	TIMER7_CH3
61	TIMER7_MCH0
62	TIMER7_MCH1
63	TIMER7_MCH2
64	TIMER7_MCH3
65	TIMER7_UP
66	TIMER7_TRG
67	TIMER7_CMT
68	TIMER4_CH0
69	TIMER4_CH1
70	TIMER4_CH2
71	TIMER4_CH3

Request multiplexer channel input identification MUXID[7:0]	Source
72	TIMER4_UP
73	Reserved
74	TIMER4_TRG
75	SPI2_RX
76	SPI2_TX
77	UART3_RX
78	UART3_TX
79	UART4_RX
80	UART4_TX
81	DAC_CH0
82	DAC_CH1
83	TIMER5_UP
84	TIMER6_UP
85	USART5_RX
86	USART5_TX
87	I2C2_RX
88	I2C2_TX
89	DCI
90	CAU_IN
91	CAU_OUT
92	HAU_IN
93	UART6_RX
94	UART6_TX
95	UART7_RX
96	UART7_TX
97	SPI3_RX
98	SPI3_TX
99	SPI4_RX
100	SPI4_TX
101	SAI0_B0
102	SAI0_B1
103	RSPDIF_DATA
104	RSPDIF_CS
105	HPDF_FLT0
106	HPDF_FLT1
107	HPDF_FLT2
108	HPDF_FLT3
109	TIMER14_CH0
110	TIMER14_CH1

Request multiplexer channel input identification MUXID[7:0]	Source
111	TIMER14_MCH0
112	TIMER14_UP
113	TIMER14_TRG
114	TIMER14_CMT
115	TIMER15_CH0
116	TIMER15_MCH0
117	Reserved
118	TIMER15_UP
119	TIMER16_CH0
120	TIMER16_MCH0
121	Reserved
122	TIMER16_UP
123	ADC2
124	FAC_READ
125	FAC_WRITE
126	TMU_READ
127	TMU_WRITE
128	TIMER22_CH0
129	TIMER22_CH1
130	TIMER22_CH2
131	TIMER22_CH3
132	TIMER22_UP
133	Reserved
134	TIMER22_TRG
135	TIMER23_CH0
136	TIMER23_CH1
137	TIMER23_CH2
138	TIMER23_CH3
139	TIMER23_UP
140	Reserved
141	TIMER23_TRG
142	TIMER30_CH0
143	TIMER30_CH1
144	TIMER30_CH2
145	TIMER30_CH3
146	TIMER30_UP
147	Reserved
148	TIMER30_TRG
149	TIMER31_CH0

Request multiplexer channel input identification MUXID[7:0]	Source
150	TIMER31_CH1
151	TIMER31_CH2
152	TIMER31_CH3
153	Reserved
154	TIMER31_UP
155	TIMER31_TRG
156	TIMER40_CH0
157	TIMER40_MCH0
158	TIMER40_CMT
159	TIMER40_UP
160	TIMER41_CH0
161	TIMER41_MCH0
162	TIMER41_CMT
163	TIMER41_UP
164	TIMER42_CH0
165	TIMER42_MCH0
166	TIMER42_CMT
167	TIMER42_UP
168	TIMER43_CH0
169	TIMER43_MCH0
170	TIMER43_CMT
171	TIMER43_UP
172	TIMER44_CH0
173	TIMER44_MCH0
174	TIMER44_CMT
175	TIMER44_UP
176	TIMER50_UP
177	TIMER51_UP
178	SAI1_B0
179	SAI1_B1
180	SAI2_B0
181	SAI2_B1
182	SPI5_RX
183	SPI5_TX
184	I2C3_RX
185	I2C3_TX
186	CAN0
187	CAN1
188	CAN2

Request multiplexer channel input identification MUXID[7:0]	Source
189	TIMER40_CH1
190	TIMER40_TRG
191	TIMER41_CH1
192	TIMER41_TRG
193	TIMER42_CH1
194	TIMER42_TRG
195	TIMER43_CH1
196	TIMER43_TRG
197	TIMER44_CH1
198	TIMER44_TRG

Trigger input mapping

The DMA request trigger input for the DMAMUX request generator channel x is selected through the TID[5:0] bits in DMAMUX_RG_CHxCFG register, the sources can refer to ***Table 18-3. Trigger input mapping***.

Table 18-3. Trigger input mapping

Trigger input identification TID[5:0]	Source
0	Evt0_out
1	Evt1_out
2	Evt2_out
3	Evt3_out
4	Evt4_out
5	Evt5_out
6	Evt6_out
7	EXTI_0
8	EXTI_1
9	EXTI_2
10	EXTI_3
11	EXTI_4
12	EXTI_5
13	EXTI_6
14	EXTI_7
15	EXTI_8
16	EXTI_9
17	EXTI_10
18	EXTI_11
19	EXTI_12

Trigger input identification TID[5:0]	Source
20	EXTI_13
21	EXTI_14
22	EXTI_15
23	RTC_WAKEUP
24	CMP0_OUTPUT
25	CMP1_OUTPUT
26	I2C0_WAKEUP
27	I2C1_WAKEUP
28	I2C2_WAKEUP
29	I2C3_WAKEUP
30	I2C0_INT_EVENT
31	I2C1_INT_EVENT
32	I2C2_INT_EVENT
33	I2C3_INT_EVENT
34	ADC2_INT

Synchronization input mapping

The synchronization input is selected by SYNCID[4:0] bits in the DMAMUX_RM_CHxCFG register, the sources can refer to ***Table 18-4. Synchronization input mapping***.

Table 18-4. Synchronization input mapping

Synchronization input identification SYNCID[4:0]	Source
0	Evt0_out
1	Evt1_out
2	Evt2_out
3	Evt3_out
4	Evt4_out
5	Evt5_out
6	Evt6_out
7	EXTI_0
8	EXTI_1
9	EXTI_2
10	EXTI_3
11	EXTI_4
12	EXTI_5
13	EXTI_6
14	EXTI_7
15	EXTI_8
16	EXTI_9

Synchronization input identification SYNCID[4:0]	Source
17	EXTI_10
18	EXTI_11
19	EXTI_12
20	EXTI_13
21	EXTI_14
22	EXTI_15
23	RTC_WAKEUP
24	CMP0_OUTPUT
25	I2C0_WAKEUP
26	I2C1_WAKEUP
27	I2C2_WAKEUP
28	I2C3_WAKEUP

18.6. Register definition

DMAMUX base address: 0x4002 0800

18.6.1. Request multiplexer channel x configuration register (DMAMUX_RM_CHxCFG)

x = 0...15, where x is a channel number

Address offset: 0x00 + 0x04 * x

Reset value: 0x0000 0000

This register has to be accessed by word (32-bit).

31	30	29	28	27	26	25	24	23	22	21	20	19	18	17	16
Reserved			SYNCID[4:0]					NBR[4:0]					SYNCP[1:0]		SYNCEN
			rw					rw					rw		rw

15	14	13	12	11	10	9	8	7	6	5	4	3	2	1	0
Reserved						EVGEN	SOIE	MUXID[7:0]							
						rw	rw	rw							

Bits	Fields	Descriptions
31:29	Reserved	Must be kept at reset value.
28:24	SYNCID[4:0]	Synchronization input identification Selects the synchronization input source.
23:19	NBR[4:0]	Number of DMA requests to forward The the number of DMA requests to forward to the DMA controller after a synchronization event / before an output event is generated equals to NBR[4:0] + 1. These bits shall only be written when both SYNCEN and EVGEN bits are disabled.
18:17	SYNCP[1:0]	Synchronization input polarity 00: No event detection 01: Rising edge 10: Falling edge 11: Rising and falling edges
16	SYNCEN	Synchronization enable 0: Disable synchronization 1: Enable synchronization
15:10	Reserved	Must be kept at reset value.
9	EVGEN	Event generation enable 0: Disable event generation

		1: Enable event generation
8	SOIE	Synchronization overrun interrupt enable 0: Disable interrupt 1: Enable interrupt
7:0	MUXID[7:0]	Multiplexer input identification Selects the input DMA request in multiplexer input sources.

18.6.2. Request multiplexer channel interrupt flag register (DMAMUX_RM_INTF)

Address offset: 0x80

Reset value: 0x0000 0000

This register has to be accessed by word (32-bit).

31	30	29	28	27	26	25	24	23	22	21	20	19	18	17	16
Reserved															

15	14	13	12	11	10	9	8	7	6	5	4	3	2	1	0
SOIF15	SOIF14	SOIF13	SOIF12	SOIF11	SOIF10	SOIF9	SOIF8	SOIF7	SOIF6	SOIF5	SOIF4	SOIF3	SOIF2	SOIF1	SOIF0
r	r	r	r	r	r	r	r	r	r	r	r	r	r	r	r

Bits	Fields	Descriptions
31:16	Reserved	Must be kept at reset value.
15:0	SOIFx	Synchronization overrun event flag of request multiplexer channel x If a synchronization event occurs when the DMAMUX request counter value is lower than NBR[4:0], the flag is set. It is cleared by writing 1 to the corresponding SOIFCx bit in DMAMUX_RM_INTC register.

18.6.3. Request multiplexer channel interrupt flag clear register (DMAMUX_RM_INTC)

Address offset: 0x84

Reset value: 0x0000 0000

This register has to be accessed by word (32-bit).

31	30	29	28	27	26	25	24	23	22	21	20	19	18	17	16
Reserved															

15	14	13	12	11	10	9	8	7	6	5	4	3	2	1	0
SOIFC15	SOIFC14	SOIFC13	SOIFC12	SOIFC11	SOIFC10	SOIFC9	SOIFC8	SOIFC7	SOIFC6	SOIFC5	SOIFC4	SOIFC3	SOIFC2	SOIFC1	SOIFC0
w	w	w	w	w	w	w	w	w	w	w	w	w	w	w	w

Bits	Fields	Descriptions
31:16	Reserved	Must be kept at reset value.
15:0	SOIFCx	Clear bit for synchronization overrun event flag of request multiplexer channel x. Writing 1 clears the corresponding overrun flag SOIFx in the DMAMUX_RM_INTF register.

18.6.4. Request generator channel x configuration register (DMAMUX_RG_CHxCFG)

x = 0...7, where x is a channel number

Address offset: 0x100 + 0x04 * x
Reset value: 0x0000 0000

This register has to be accessed by word (32-bit).

31	30	29	28	27	26	25	24	23	22	21	20	19	18	17	16
Reserved								NBRG[4:0]					RGTP[1:0]		RGEN
										rw			rw		rw

15	14	13	12	11	10	9	8	7	6	5	4	3	2	1	0
Reserved							TOIE	Reserved		TID[5:0]					
							rw			rw					

Bits	Fields	Descriptions
31:24	Reserved	Must be kept at reset value.
23:19	NBRG[4:0]	Number of DMA requests to be generated The number of DMA requests to be generated after a trigger event equals to NBRG[4:0] + 1. **Note:** These bits shall only be written when RGEN bit is disabled.
18:17	RGTP[1:0]	DMAMUX request generator trigger polarity 00: No event trigger detection 01: Rising edge 10: Falling edge 11: Rising and falling edges
16	RGEN	DMAMUX request generator channel x enable 0: Disable DMAMUX request generator channel x 1: Enable DMAMUX request generator channel x
15:9	Reserved	Must be kept at reset value.
8	TOIE	Trigger overrun interrupt enable 0: Disable interrupt 1: Enable interrupt

7:6	Reserved	Must be kept at reset value.
5:0	TID[5:0]	Trigger input identification Selects the DMA request trigger input source.

18.6.5. Request generator channel interrupt flag register (DMAMUX_RG_INTF)

Address offset: 0x140

Reset value: 0x0000 0000

This register has to be accessed by word (32-bit).

31	30	29	28	27	26	25	24	23	22	21	20	19	18	17	16
Reserved															

15	14	13	12	11	10	9	8	7	6	5	4	3	2	1	0
Reserved								TOIF7	TOIF6	TOIF5	TOIF4	TOIF3	TOIF2	TOIF1	TOIF0
								r	r	r	r	r	r	r	r

Bits	Fields	Descriptions
31:8	Reserved	Must be kept at reset value.
7:0	TOIFx	Trigger overrun event flag of request generator channel x. If a new trigger event occurs before the request generator counter underrun, the flag is set. It is cleared by writing 1 to the corresponding TOIFCx bit in the DMAMUX_RG_INTC register.

18.6.6. Rquest generator channel interrupt flag clear register (DMAMUX_RG_INTC)

Address offset: 0x144

Reset value: 0x0000 0000

This register has to be accessed by word (32-bit).

31	30	29	28	27	26	25	24	23	22	21	20	19	18	17	16
Reserved															

15	14	13	12	11	10	9	8	7	6	5	4	3	2	1	0
Reserved								TOIFC7	TOIFC6	TOIFC5	TOIFC4	TOIFC3	TOIFC2	TOIFC1	TOIFC0
								w	w	w	w	w	w	w	w

Bits	Fields	Descriptions
31:8	Reserved	Must be kept at reset value.
7:0	TOIFCx	Clear bit for trigger overrun event flag of request generator channel x.

Writing 1 clears the corresponding trigger overrun flag TOIFx in the DMAMUX_RG_INTF register.

19. Debug (DBG)

19.1. Overview

The GD32H7xx series provide a large variety of debug, trace and test features. They are implemented with a standard configuration of the Arm® CoreSight™ module together with a daisy chained standard TAP controller. Debug and trace functions are integrated into the ARM® Cortex®-M7. The debug system supports serial wire debug (SWD) and trace functions in addition to standard JTAG debug. The debug and trace functions refer to the following documents:

- Cortex®-M7 Technical Reference Manual
- ARM® Debug Interface v5 Architecture Specification

The DBG hold unit helps debugger to debug in power saving mode. When corresponding bit is set, debug module provide clock when in power saving mode or hold the state for TIMER, WWDGT, FWDGT, I2C, RTC or CAN.

19.2. JTAG / SW function overview

Debug capabilities can be accessed by a debug tool via serial wire (SW - Debug Port) or JTAG interface (JTAG - Debug Port).

19.2.1. Switch JTAG or SW interface

By default, the SWD interface is active. The JTAG and SWD debug interface switching is realized through the JTAGNSW bit of the EFUSE_USER_CTL register.

19.2.2. Pin assignment

The JTAG interface provides 5-pin standard JTAG, known as JTAG clock (JTCK), JTAG mode selection (JTMS), JTAG data input (JTDI), JTAG data output (JTDO) and JTAG reset (NJTRST, active low). The serial wire debug (SWD) provide 2-pin SW interface, known as SW data input/output (SWDIO) and SW clock (SWCLK). The two SW pin are multiplexed with two of five JTAG pin, which is SWDIO multiplexed with JTMS, SWCLK multiplexed with JTCK. The JTDO is also used as trace async data output (TRACESWO) when async trace enabled.

Table 19-1. Pin assignment

Pin	Debug interface
PA15	JTDI
PA14	JTCK/SWCLK
PA13	JTMS/SWDIO
PB4	NJTRST

PB3	JTDO

By default, 5-pin standard JTAG debug mode is chosen after reset. Users can also use JTAG function without NJTRST pin, then the PB3 can be used to other GPIO functions (NJTRST tied to 1 by hardware). If switch to SW debug mode, the PA15/PB3/PB4 are released to other GPIO functions. If JTAG and SW not used, all 5-pin can be released to other GPIO functions.

19.2.3. JTAG

Figure 19-1. Block diagram of JTAG unit

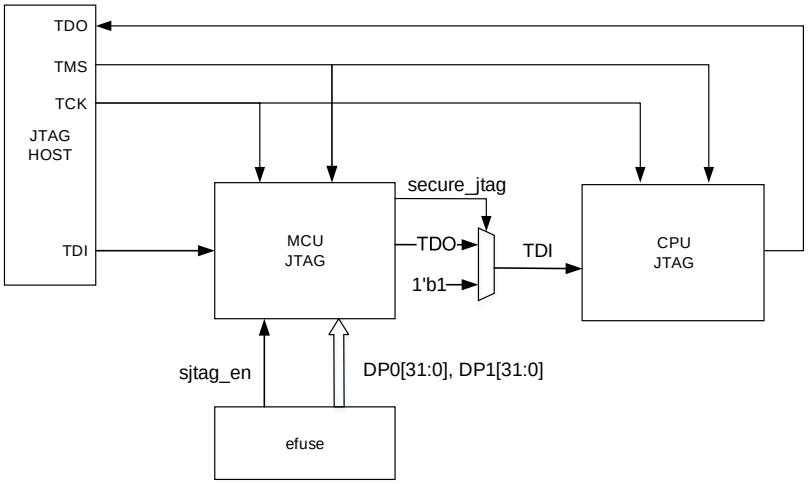

JTAG daisy chained structure

The Cortex®-M7 JTAG TAP (CPU JTAG) is connected to a boundary-scan (BSD) JTAG TAP (MCU JTAG). The BSD JTAG IR is 5-bit width, while the Cortex®-M7 JTAG IR is 4-bit width. So when JTAG in IR shift step, it first shift 5-bit BYPASS instruction (5'b 11111) for BSD JTAG, and then shift normal 4-bit instruction for Cortext-M7 JTAG. Because of the data shift under BSD JTAG BYPASS mode, adding 1 extra bit to the data chain is needed.

The BSD JTAG IDCODE is 0x000717A3.

Secure JTAG

1. Secure JTAG only supports JTAG but not SW

2. EFUSE configuration:

EFUSE related bits: JTAGNSW, NDBG[1:0], DPx[31:0](x=0,1)

Mode	Register configuration
No debug	NDBG[1:0] = 2b'10 or 2b'11 JTAGNSW: Don't care

	DP0[31:0], DP1[31:0]: Don't care
SW	NDBG[1:0] = 2b'00 or 2b'01 JTAGNSW = 1b'0 DP0[31:0], DP1[31:0]: Don't care
Normal JTAG	NDBG[1:0] = 2b'00 JTAGNSW = 1b'1 DP0[31:0], DP1[31:0]: Don't care
Secure JTAG	NDBG[1:0] = 2b'01 JTAGNSW = 1b'1 DP0[31:0], DP1[31:0]: Efuse debug password value

3. Using Secure JTAG

a) Configure EFUSE for secure JTAG mode: Configure DPx[31:0] as the JTAG secure password. JTAGNSW=1b'1, NDBG[1:0]= 2b'01.

b) Power reset: After the power is reset, the JTAG is in a secure state, and secure_jtag is "1". At this time, the CPU cannot be operated through JTAG.

c) Deactivate Secure JTAG: The JTAG host sequentially writes the following two passwords to the MCU JTAG to release the security mode. At this time, secure_jtag is 0, and the CPU can be operated through JTAG.

Write 5'b10101 to IR, Write DP0[31:0] to DR

Write 5'b10110 to IR, Write DP1[31:0] to DR

Note: 1. If the password is entered incorrectly, a power reset is required.

2. Any wrong input sequence occurrs, a power reset is required to re-decrypt.

3. Entering the correct password to open debug is limited to SPC_L and below, and will not open ROM, Flash secure mode and SPC_H.

d) Get written value and JTAG status:

Get the written value and JTAG status via JTAG:

Write 5'b11000 to IR, Read value from DR: It can be judged whether the read IR value is the written 5'b11000

Write 5'b11001 to IR, Read value from DR: It can be judged whether the read IR value is the written 5'b10110.

Write 5'b11010 to IR, Read value from DR: {30'b0, wrong_seq, secure_jtag}, Among them, secure_jtag indicates the JTAG status. "1": The CPU cannot be operated via JTAG "0": The CPU can be operated via JTAG. wrong_seq indicates the decryption process error flag,"1": An error occurred in the decryption, "0": Decryption process without errors.

19.2.4. Debug reset

The JTAG-DP and SW-DP registers are in the power on reset domain. The system reset initializes the majority of the Cortex®-M7, excluding NVIC and debug logic, (FPB, DWT, and ITM). The NJTRST reset can reset JTAG TAP controller only. So, it can perform debug feature under system reset. Such as, halt-after-reset, which is the debugger sets halt under system reset, and the core halts immediately after the system reset is released.

19.2.5. JEDEC-106 ID code

The Cortex®-M7 integrates JEDEC-106 ID code, which is located in ROM table and mapped on the address of 0xE00FF000_0xE00FFFFF.

19.3. Debug hold function overview

19.3.1. Debug support for power saving mode

When STB_HOLD bit in DBG control register (DBG_CTL0) is set and entering the standby mode, the clock of AHB bus and system clock remain the same, and the debugger can debug in standby mode. When exit the standby mode, a system reset generated.

When DSLP_HOLD bit in DBG control register (DBG_CTL0) is set and entering the deep-sleep mode, the clock of AHB bus and system clock remain the same, and the debugger can debug in deep-sleep mode. When exit the deep-sleep mode, PLL is off, system clock switches to IRC64M or LPIRC4M.

When SLP_HOLD bit in DBG control register (DBG_CTL0) is set and entering the sleep mode, the clock of AHB bus for CPU is not closed, and the debugger can debug in sleep mode.

19.3.2. Debug support for TIMER, I2C, WWDGT, FWDGT, RTC and CAN

When the core halted and the corresponding bit in DBG control register x (DBG_CTLx, x=1,2,3,4) is set, the following behaved.

For TIMER, the timer counters stopped and hold for debug.

For I2C, SMBUS timeout hold for debug.

For WWDGT or FWDGT, the counter clock stopped for debug.

For RTC, the counter clock stopped for debug.

For CAN, the receive register stopped counting for debug.

19.4. Register definition

DBG base address: 0xE00E1000

19.4.1. ID code register (DBG_ID)

Address offset: 0x00

Read only

This register has to be accessed by word (32-bit).

31	30	29	28	27	26	25	24	23	22	21	20	19	18	17	16
ID_CODE[31:16]															
r															

15	14	13	12	11	10	9	8	7	6	5	4	3	2	1	0
ID_CODE[15:0]															
r															

Bits	Fields	Descriptions
31:0	ID_CODE[31:0]	DBG ID code register These bits read by software. These bits are unchanged constant.

19.4.2. Control register0 (DBG_CTL0)

Address offset: 0x04

Reset value: 0x0000 0000

This register has to be accessed by word (32-bit).

31	30	29	28	27	26	25	24	23	22	21	20	19	18	17	16
Reserved											TRACECLKEN	TRACE_MODE[1:0]		Reserved	
											rw	rw			

15	14	13	12	11	10	9	8	7	6	5	4	3	2	1	0
Reserved													STB_HOLD	DSLP_HOLD	SLP_HOLD
													rw	rw	rw

Bits	Fields	Descriptions
31:21	Reserved	Must be kept at reset value.
20	TRACECLKEN	Trace port clock enable 0: trace port clock disable 1: trace port clock enable.
19:18	TRACE_MODE[1:0]	Trace pin allocation mode This bit is set and reset by software 00: Trace pin used in asynchronous mode

		01: Trace pin used in synchronous mode and the data length is 1 10: Trace pin used in synchronous mode and the data length is 2 11: Trace pin used in synchronous mode and the data length is 4.
17:3	Reserved	Must be kept at reset value.
2	STB_HOLD	Standby mode hold bit This bit is set and reset by software. 0: no effect 1: In the standby mode, all active clocks continue to run, the debugger can debug in standby mode.
1	DSLP_HOLD	Deep-sleep mode hold bit This bit is set and reset by software. 0: no effect 1:. In the deep-sleep mode, all active clocks continue to run, the debugger can debug in deep-sleep mode.
0	SLP_HOLD	Sleep mode hold bit This bit is set and reset by software. 0: no effect 1: In the seep mode, all active clocks and oscillators continue to run, the debugger can debug in deep-sleep mode.

19.4.3. Control register1 (DBG_CTL1)

Address offset: 0x34

Reset value: 0x0000 0000

This register has to be accessed by word (32-bit).

31	30	29	28	27	26	25	24	23	22	21	20	19	18	17	16
Reserved															

15	14	13	12	11	10	9	8	7	6	5	4	3	2	1	0
Reserved									WWDGT_HOLD	Reserved					
									rw						

Bits	Fields	Descriptions
31:7	Reserved	Must be kept at reset value.
6	WWDGT_HOLD	WWDGT hold bit This bit is set and reset by software. 0: no effect 1: Hold the WWDGT counter clock for debug when core halted.
5:0	Reserved	Must be kept at reset value.

19.4.4. Control register2 (DBG_CTL2)

Address offset: 0x3C

Reset value: 0x0000 0000

This register has to be accessed by word (32-bit).

31	30	29	28	27	26	25	24	23	22	21	20	19	18	17	16
Reserved							I2C3_HOLD	I2C2_HOLD	I2C1_HOLD	I2C0_HOLD	Reserved				
							rw	rw	rw	rw					

15	14	13	12	11	10	9	8	7	6	5	4	3	2	1	0
Reserved				TIMER51_HOLD	TIMER50_HOLD	TIMER31_HOLD	TIMER30_HOLD	TIMER23_HOLD	TIMER22_HOLD	TIMER6_HOLD	TIMER5_HOLD	TIMER4_HOLD	TIMER3_HOLD	TIMER2_HOLD	TIMER1_HOLD
				rw	rw	rw	rw	rw	rw	rw	rw	rw	rw	rw	rw

Bits	Fields	Descriptions
31:25	Reserved	Must be kept at reset value.
24	I2C3_HOLD	I2C3 hold bit This bit is set and reset by software. 0: no effect 1: Hold the I2C3 SMBUS timeout for debug when core halted.
23	I2C2_HOLD	I2C2 hold bit This bit is set and reset by software. 0: no effect 1: Hold the I2C2 SMBUS timeout for debug when core halted.
22	I2C1_HOLD	I2C1 hold bit This bit is set and reset by software. 0: no effect 1: Hold the I2C1 SMBUS timeout for debug when core halted.
21	I2C0_HOLD	I2C0 hold bit This bit is set and reset by software. 0: no effect 1: Hold the I2C0 SMBUS timeout for debug when core halted.
20:12	Reserved	Must be kept at reset value.
11	TIMER51_HOLD	TIMER51 hold bit This bit is set and reset by software. 0: no effect 1: Hold the TIMER51 counter for debug when core halted.
10	TIMER50_HOLD	TIMER50 hold bit This bit is set and reset by software. 0: no effect

		1: Hold the TIMER50 counter for debug when core halted.
9	TIMER31_HOLD	TIMER31 hold bit This bit is set and reset by software. 0: no effect 1: Hold the TIMER31 counter for debug when core halted.
8	TIMER30_HOLD	TIMER30 hold bit This bit is set and reset by software. 0: no effect 1: Hold the TIMER30 counter for debug when core halted.
7	TIMER23_HOLD	TIMER23 hold bit This bit is set and reset by software. 0: no effect 1: Hold the TIMER23 counter for debug when core halted.
6	TIMER22_HOLD	TIMER22 hold bit This bit is set and reset by software. 0: no effect 1: Hold the TIMER22 counter for debug when core halted.
5	TIMER6_HOLD	TIMER6 hold bit This bit is set and reset by software. 0: no effect 1: Hold the TIMER6 counter for debug when core halted.
4	TIMER5_HOLD	TIMER5 hold bit This bit is set and reset by software. 0: no effect 1: Hold the TIMER5 counter for debug when core halted.
3	TIMER4_HOLD	TIMER4 hold bit This bit is set and reset by software. 0: no effect 1: Hold the TIMER4 counter for debug when core halted.
2	TIMER3_HOLD	TIMER3 hold bit This bit is set and reset by software. 0: no effect 1: Hold the TIMER3 counter for debug when core halted.
1	TIMER2_HOLD	TIMER2 hold bit This bit is set and reset by software. 0: no effect 1: Hold the TIMER2 counter for debug when core halted.
0	TIMER1_HOLD	TIMER1 hold bit This bit is set and reset by software.

0: no effect

1: Hold the TIMER1 counter for debug when core halted.

19.4.5. Control register3 (DBG_CTL3)

Address offset: 0x4C

Reset value: 0x0000 0000

This register has to be accessed by word (32-bit).

31	30	29	28	27	26	25	24	23	22	21	20	19	18	17	16
Reserved								TIMER44_HOLD	TIMER43_HOLD	TIMER42_HOLD	TIMER41_HOLD	TIMER40_HOLD	TIMER16_HOLD	TIMER15_HOLD	TIMER14_HOLD
								rw	rw	rw	rw	rw	rw	rw	rw

15	14	13	12	11	10	9	8	7	6	5	4	3	2	1	0
Reserved											CAN2_HOLD	CAN1_HOLD	CAN0_HOLD	TIMER7_HOLD	TIMER0_HOLD
											rw	rw	rw	rw	rw

Bits	Fields	Descriptions
31:24	Reserved	Must be kept at reset value.
23	TIMER44_HOLD	TIMER44 hold bit This bit is set and reset by software. 0: no effect 1: Hold the TIMER44 counter for debug when core halted.
22	TIMER43_HOLD	TIMER43 hold bit This bit is set and reset by software. 0: no effect 1: Hold the TIMER43 counter for debug when core halted.
21	TIMER42_HOLD	TIMER42 hold bit This bit is set and reset by software. 0: no effect 1: Hold the TIMER42 counter for debug when core halted.
20	TIMER41_HOLD	TIMER41 hold bit This bit is set and reset by software. 0: no effect 1: Hold the TIMER41 counter for debug when core halted.
19	TIMER40_HOLD	TIMER40 hold bit This bit is set and reset by software. 0: no effect 1: Hold the TIMER40 counter for debug when core halted.
18	TIMER16_HOLD	TIMER16 hold bit

		This bit is set and reset by software. 0: no effect 1: Hold the TIMER16 counter for debug when core halted.
17	TIMER15_HOLD	TIMER15 hold bit This bit is set and reset by software. 0: no effect 1: Hold the TIMER15 counter for debug when core halted.
16	TIMER14_HOLD	TIMER14 hold bit This bit is set and reset by software. 0: no effect 1: Hold the TIMER14 counter for debug when core halted.
15:5	Reserved	Must be kept at reset value.
4	CAN2_HOLD	CAN2 hold bit This bit is set and reset by software. 0: no effect 1: Hold the CAN2 for debug when core halted.
3	CAN1_HOLD	CAN1 hold bit This bit is set and reset by software. 0: no effect 1: Hold the CAN1 for debug when core halted.
2	CAN0_HOLD	CAN0 hold bit This bit is set and reset by software. 0: no effect 1: Hold the CAN0 for debug when core halted.
1	TIMER7_HOLD	TIMER7 hold bit This bit is set and reset by software. 0: no effect 1: Hold the TIMER7 counter for debug when core halted.
0	TIMER0_HOLD	TIMER0 hold bit This bit is set and reset by software. 0: no effect 1: Hold the TIMER0 counter for debug when core halted.

19.4.6. Control register4 (DBG_CTL4)

Address offset: 0x54

Reset value: 0x0000 0000

This register has to be accessed by word (32-bit).

31	30	29	28	27	26	25	24	23	22	21	20	19	18	17	16

Reserved	FWDGT_HOLD	Reserved	RTC_HOLD
	rw		rw

15	14	13	12	11	10	9	8	7	6	5	4	3	2	1	0
Reserved															

Bits	Fields	Descriptions
31:19	Reserved	Must be kept at reset value.
18	FWDGT_HOLD	FWDGT hold bit This bit is set and reset by software. 0: no effect 1: Hold the FWDGT counter clock for debug when core halted.
17	Reserved	Must be kept at reset value.
16	RTC_HOLD	RTC hold bit This bit is set and reset by software. 0: no effect 1: Hold the RTC counter clock for debug when core halted.
15:0	Reserved	Must be kept at reset value.

20. Analog-to-digital converter (ADC)

20.1. Overview

A 12 / 14-bit successive approximation analog-to-digital converter module(ADC) is integrated on the MCU chip. ADC0 has 20 external channels, 1 internal channel(DAC0_OUT0 channel), ADC1 has 18 external channels, 3 internal channels(the battery voltage, V_{REFINT} inputs channel and DAC0_OUT1 channel), ADC2 has 17 external channels, 4 internal channels(the battery voltage, V_{REFINT} inputs channel, tempeture sensor and high-precision tempeture sensor). After sampling and conversion, the conversion results can be stored in the corresponding data registers according to the least significant bit(LSB) alignment or the most significant(MSB) bit alignment(ADC0 / 1 are 32-bit data register, ADC2 is 16-bit data register). An on-chip hardware oversample scheme improves performances and reduces the computational burden of MCU.

20.2. Characteristics

- High performance:
  - ADC sampling rsolution:ADC0 and ADC1, 14-bit,12-bit, 10-bit or 8-bit configurable resolution. ADC2, 12-bit, 10-bit, 8-bit or 6-bit configurable resolution.
  - ADC0 and ADC1 sampling rate: 4MSPs for 14-bit resolution, 4.5 MSPs for 12-bit resolution, 5.14MSPs for 10-bit resolution, 6MSPs for 8-bit resolution, faster sampling rate can be obtained by lowering the resolution.
  - ADC2 sampling rate: 5.3 MSPs for 12-bit resolution, 6.15 MSPs for 10-bit resolution, 7.27 MSPs for 8-bit resolution, 8.89 MSPs for 6-bit resolution, faster sampling rate can be obtained by lowering the resolution.
  - Self-calibration time: ADC0 and ADC1 are 1082 ADC clock periods, ADC2 is 46 ADC clock periods.
  - Programmable sampling time.
  - Data storage mode: the most significant bit and the least significant bit
  - DMA support.
- Analog input channels:
  - 20 external analog inputs in ADC0，18 external analog inputs in ADC1，17 external analog inputs in ADC2.
  - Internal temperature sensor (V_{SENSE}).
  - Internal reference voltage (V_{REFINT}).
  - External battery power supply pin (V_{BAT}).
  - Internal high-precision temperature sensor (V_{SENSE2}).
  - Connection to DAC internal channels.
- Start-of-conversion can be initiated:
  - By software.

- By TRIGSEL.

- Operation modes:
  - Converts a single channel or scans a sequence of channels.
  - Single operation mode converts selected inputs once per trigger.
  - Continuous operation mode converts selected inputs continuously.
  - Discontinuous operation mode.
  - SYNC mode (the device with two ADCs).
- Conversion result threshold monitor function: analog watchdog.
- Interrupt generation at the end of routine conversions, in case of analog watchdog event and overflow event.
- Oversampler:
  - 32-bit data register in ADC0 and ADC1, 16-bit data register in ADC2.
  - In ADC0 and ADC1, Oversampling ratio arbitrarily adjustable from 2x to 1024x, In ADC2, Oversampling ratio arbitrarily adjustable from 2x to 256x.
  - In ADC0 and ADC1, Programmable data shift up to 11-bit, In ADC2, Programmable data shift up to 8-bit.
- ADC0 and ADC1 supply requirements: 1.8V to 3.6V, and typical power supply voltage is 3.3V, ADC2 supply requirements: 1.71V to 3.6V, and typical power supply voltage is 3.3V.
- Channel input range: $V_{REFN} \leq V_{IN} \leq V_{REFP}$.
- Data can be routed to HPDF for post processing.

20.3. Pins and internal signals

Figure 20-1. ADC module block diagram shows the ADC block diagram. *Table 20-1. ADC internal input signals* and *Table 20-2. ADC input pins definition* give the ADC internal signals and pins description.

Table 20-1. ADC internal input signals

Internal signal name	Description
V_{SENSE}	Internal temperature sensor output voltage
V_{SENSE2}	Internal high-precision temperature sensor2 output voltage
V_{REFINT}	Internal voltage reference output voltage
V_{BAT}	External battery voltage

Table 20-2. ADC input pins definition

Name	Description
V_{DDA}	Analog power supply equal to V_{DD} and 1.8 V ≤ V_{DDA}≤ 3.6 V(ADC0 and ADC1), 1.71 V ≤ V_{DDA}≤ 3.6 V(ADC2)
V_{SSA}	Ground for analog power supply equal to V_{SS}
V_{REFP}	The positive reference voltage for the ADC, 1.8 V ≤V_{REFP}≤ V_{DDA}(ADC0 and ADC1), 1.71

Name	Description
	V ≤V_{REFP}≤ V_{DDA}(ADC2)
V_{REFN}	The negative reference voltage for the ADC,V_{REFN} = V_{SSA}
ADCx_IN[19:0]	Up to 20 external channels

Note: V_{DDA} and V_{SSA} have to be connected to V_{DD} and V_{SS}, respectively.

20.4. Function overview

Figure 20-1. ADC module block diagram

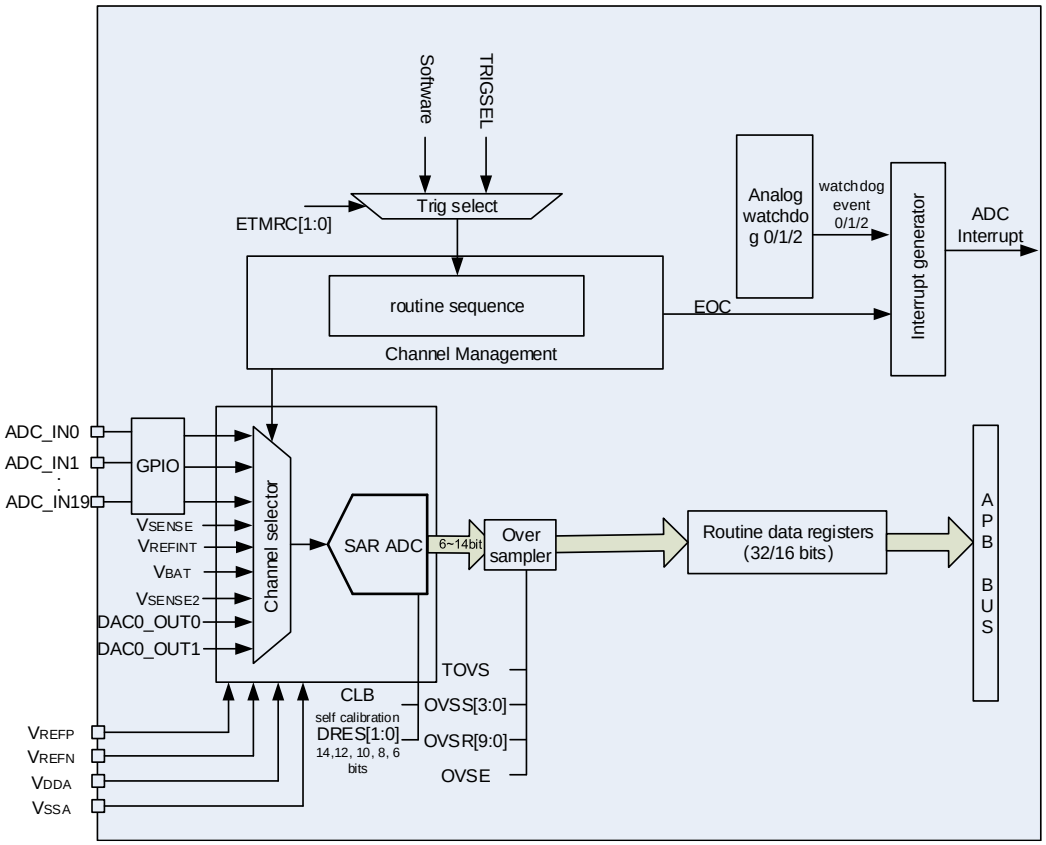

20.4.1. Foreground calibration function

During the foreground calibration procedure, the ADC calculates a calibration factor which is internally applied to the ADC until the next ADC power-off. The application must not use the ADC during calibration and must wait until it is completed. Calibration should be performed before starting A/D conversion. The calibration is initiated by software by setting bit CLB=1. CLB bit stays at 1 during all the calibration sequence. It is then cleared by hardware as soon as the calibration is completed.

The calibration mode is divided into offset + mismatch and offset(only for ADC0/1), which can be modified by setting the CALMOD bit of the ADC_CTL1 register, and the offset mode is

recommended.

When the ADC operating conditions change (such as supply power voltage V_{DDA}, positive reference voltage V_{REFP}, temperature and so on), it is recommended to re-run a calibration cycle.

The internal analog calibration can be reset by setting the RSTCLB bit in ADC_CTL1 register.

Calibration software procedure:

1. Ensure that ADCON=1.
2. Delay 14 CK_ADC to wait for ADC stability.
3. Set RSTCLB (optional).
4. Set CLB=1.
5. Wait until CLB=0.

20.4.2. Dual clock domain architecture

The CK_ADC clock provided by the clock controller is synchronous with the AHB clock. In this mode, ADCSCK[2:0] in ADC_SYNCCTL should be set different from 000.The divide factor can be 2, 4, 6, 8, 10, 12, 14,16. Thus the maximum frequency is 72 MHz for ADC0 and ADC1, 80 MHz for ADC2.

The CK_ADC can also be feed by CK_PLL1P, CK_PLL2R or CK_PER, which can be asynchronous and independent from the AHB clock. In this mode, ADCSCK[2:0] in ADC_SYNCCTL should be set to 000. The divide factor can be configured through to ADCCK[3:0] of ADC_SYNCCTL.

The RCU controller has a dedicated programmable prescaler for the ADC clock.

Note: The ADC1 clock shares the ADC0 clock. When using the ADC1, ADC0 clock needs to be opened, and the clock frequency division can only be configured through ADC0.

20.4.3. ADC enable

The ADCON bit on the ADC_CTL1 register is the enable switch of the ADC module. The ADC module will keep in reset state if this bit is 0. For power saving, when this bit is reset, the analog sub-module will be put into power off mode. After ADC is enabled, you need delay t_{SU} time for sampling, the value of t_{SU} please refer to the device datasheet.

20.4.4. Single-enden and differential input channels

By writing to bits DIFCTL[21:0] in the ADC_DIFCTL register, the user can configure channels as differential input or single-ended input, and the ADC must be disabled (ADCON = 0) when the user configurate these bits.

The channel n voltage is the difference between positive input and negative input. The positive input is external voltage V_{INn}, and there is a difference of the negative input between

single-ended mode and differential input mode. In single-ended input mode, the negative input is V_{REFN}, in differential input mode, the negative input is V_{INm}. And therefore, channel m is no longer usable in single-ended mode or in differential mode and must never be configured to be converted. Differential channel pin shown in ***Table 20-3. ADC differential channel pin matching***.

Table 20-3. ADC differential channel pin matching

Differential channel n number	ADC0		ADC1		ADC2	
	V_{INn}	V_{INm}	V_{INn}	V_{INm}	V_{INn}	V_{INm}
0	PA0_C	PA1_C	PA0_C	PA1_C	PC2_C	PC3_C
1	PA1_C	PA0_C	PA1_C	PA0_C	PC3_C	PC2_C
2	PF11	PF12	PF13	PF14	PF9	PF10
3	PA6	PA7	PA6	PA7	PF7	PF8
4	PC4	PC5	PC4	PC5	PF5	PF6
5	PB1	PB0	PB1	PB0	PF3	PF4
6	PF12	PF11	PF14	PF13	PF10	PF9
7	PA7	PA6	PA7	PA6	PF8	PF7
8	PC5	PC4	PC5	PC4	PF6	PF5
9	PB0	PB1	PB0	PB1	PF4	PF3
10	PC0	PC1	PC0	PC1	PC0	PC1
11	PC1	PC2	PC1	PC2	PC1	PC2
12	PC2	PC3	PC2	PC3	PC2	PC1
13	PC3	PC2	PC3	PC2	PH2	PH3
14	PA2	PA3	PA2	PA3	PH3	PH4
15	PA3	PA2	PA3	PA2	PH4	PH5
16	PA0	PA1	null	null	PH5	PH4
17	PA1	PA0	null	null	null	null
18	PA4	PA5	PA4	PA5	null	null
19	PA5	PA4	PA5	PA4	null	null
20	null	null	null	null	null	null
21	null	null	null	null	null	null

When the channel is used in differential input mode, the input voltages should be differential signals (common mode voltage is V_{REFP}/ 2), and the input ranges are still (V_{REFN} ~ V_{REFP}).

Taking the right-aligned, 12-bit resolution as an example:

1) When V_{INn} is V_{REFP} and V_{INm} is V_{REFN}, the conversion result of channel n is 0x0FFF;
2) When V_{INn} is V_{REFN} and V_{INm} is V_{REFP}, The conversion result of channel n is 0x0000;
3) When V_{INn} is V_{REFP} / 2 and V_{INm} is V_{REFP} / 2, the conversion result of channel n is 0x07FF.

D_{out} is the conversion result of channel n, then the differential voltage is:

$$V_{INn}-V_{INm} = V_{REFP}*(2*D_{out}/4095-1) \quad (20\text{-}1)$$

20.4.5. Routine sequence

The channel management circuit can organize the sampling conversion channels into a sequence: routine sequence. The routine sequence supports up to 21 channels, and each channel is called routine channel.

The ADC_RSQ0~ADC_RSQ8 registers specify the selected channels of the routine sequence. The RL[3:0] bits in the ADC_RSQ0 register specify the total conversion sequence length.

Note: Although the ADC supports 21 multiplexed channels, the maximum length of the sequence is only 16.

20.4.6. Operation modes

Single operation mode

In the single operation mode, the ADC performs conversion on the channel specified in the RSQ0[4:0] bits of ADC_RSQ8 register at a routine trigger. When the ADCON has been set high, the ADC samples and converts a single channel, once the corresponding software trigger or TRIGSEL trigger is active.

Figure 20-2. Single operation mode

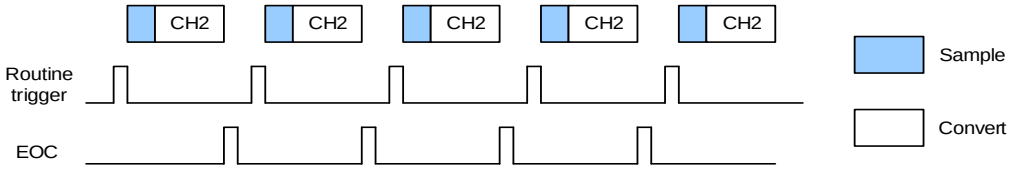

After conversion of a single routine channel, the conversion data will be stored in the ADC_RDATA register, the EOC will be set. An interrupt will be generated if the EOCIE bit is set.

Software procedure for a single operation mode of a routine channel:

1. Make sure the DISRC, SM in the ADC_CTL0 register and CTN bit in the ADC_CTL1 register are reset.
2. Configure RSQ0 with the analog channel number.
3. Configure ADC_RSQx register.
4. Configure ETMRC[1:0] bits in the ADC_CTL1 register if in need.
5. Set the SWRCST bit, or generate an TRIGSEL trigger for the routine sequence.
6. Wait the EOC flag to be set.
7. Read the converted data in the ADC_RDATA register.
8. Clear the EOC flag by writing 0 to it.

Continuous operation mode

The continuous operation mode will be enabled when CTN bit in the ADC_CTL1 register is

set. In this mode, the ADC performs conversion on the channel specified in the RSQ0. When the ADCON has been set high, the ADC samples and converts specified channel, once the corresponding software trigger or TRIGSEL trigger is active. The conversion data will be stored in the ADC_RDATA register.

Figure 20-3. Continuous operation mode

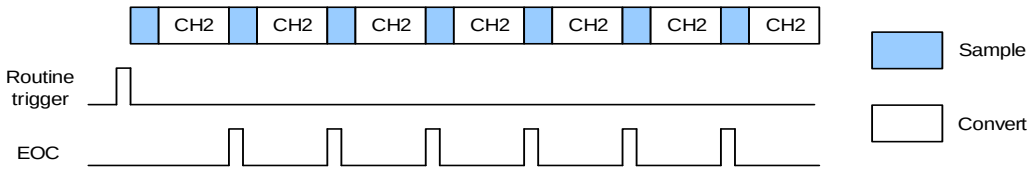

Software procedure for continuous operation mode on a routine channel:

1. Set the CTN bit in the ADC_CTL1 register.
2. Configure RSQ0 with the analog channel number.
3. Configure ADC_RSQx register.
4. Configure ETMRC[1:0] bits in the ADC_CTL1 register if in need.
5. Set the SWRCST bit, or generate an TRIGSEL trigger for the routine sequence.
6. Wait the EOC flag to be set.
7. Read the converted data in the ADC_RDATA register.
8. Clear the EOC flag by writing 0 to it.
9. Repeat steps 6~8 as soon as the conversion is in need.

To get rid of checking, DMA can be used to transfer the converted data:

1. Set the CTN and DMA bit in the ADC_CTL1 register.
2. Configure RSQ0 with the analog channel number.
3. Configure ADC_RSQx register.
4. Configure ETMRC[1:0] bits in the ADC_CTL1 register if in need.
5. Prepare the DMA module to transfer data from the ADC_RDATA (refer to the spec of the DMA module).
6. Set the SWRCST bit, or generate an TRIGSEL trigger for the routine sequence.

Scan operation mode

The scan operation mode will be enabled when SM bit in the ADC_CTL0 register is set. In this mode, the ADC performs conversion on all channels with a specific routine sequence specified in the ADC_RSQ0~ADC_RSQ8 registers. When the ADCON has been set high, the ADC samples and converts specified channels one by one in the routine sequence till the end of the sequence, once the corresponding software trigger or TRIGSEL trigger is active. The conversion data will be stored in the ADC_RDATA register. After conversion of the routine sequence, the EOC will be set. An interrupt will be generated if the EOCIE bit is set. The DMA bit in ADC_CTL1 register must be set when the routine sequence works in scan mode.

After conversion of a routine sequence, the conversion can be restarted automatically if the CTN bit in the ADC_CTL1 register is set.

Figure 20-4. Scan operation mode, continuous disable

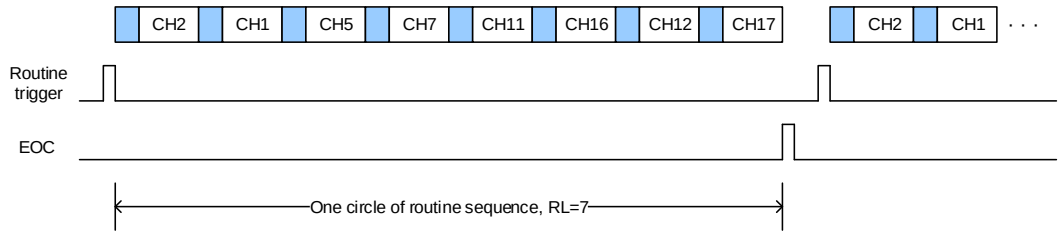

Software procedure for scan operation mode on a routine sequence:

1. Set the SM bit in the ADC_CTL0 register and the DMA bit in the ADC_CTL1 register
2. Configure ADC_RSQx registers.
3. Configure ETMRC[1:0] bits in the ADC_CTL1 register if in need.
4. Prepare the DMA module to transfer data from the ADC_RDATA (refer to the spec of the DMA module).
5. Set the SWRCST bit, or generate an TRIGSEL trigger for the routine sequence.
6. Wait the EOC flag to be set.
7. Clear the EOC flag by writing 0 to it.

Figure 20-5. Scan operation mode, continuous enable

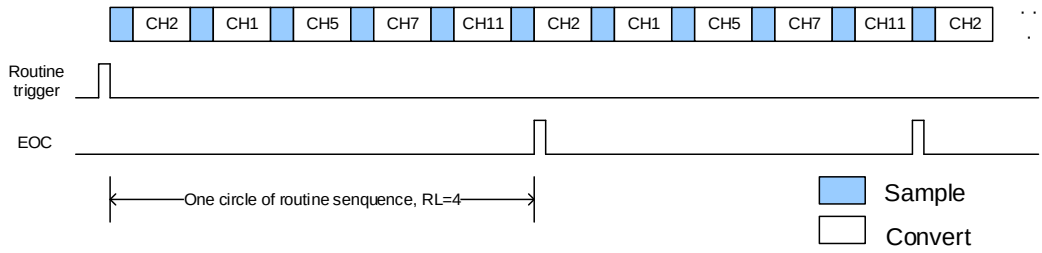

Discontinuous operation mode

The discontinuous operation mode will be enabled when DISRC bit in the ADC_CTL0 register is set. In this mode, the ADC performs a short sequence of n conversions (n does not exceed 8) which is a part of the sequence selected in the ADC_RSQ0~ADC_RSQ8 registers. The value of n is configured by the DISNUM[2:0] bits in the ADC_CTL0 register. When the corresponding software trigger or TRIGSEL trigger is active, the ADC samples and converts the next n channels configured in the ADC_RSQ0~ADC_RSQ8 registers until all the channels of routine sequence are done. The EOC will be set after every circle of the routine sequence. An interrupt will be generated if the EOCIE bit is set.

Figure 20-6. Discontinuous operation mode

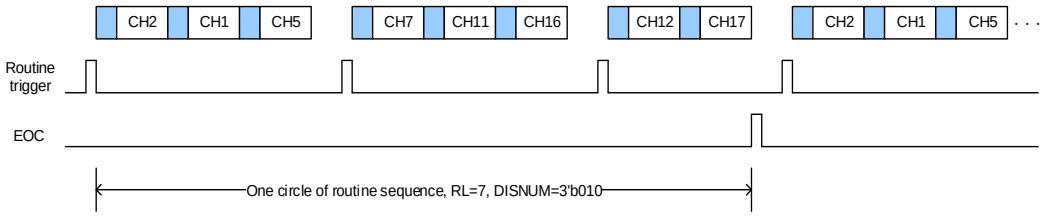

Software procedure for discontinuous operation mode on a routine sequence:

1. Set the DISRC bit in the ADC_CTL0 register and the DMA bit in the ADC_CTL1 register.
2. Configure DISNUM[2:0] bits in the ADC_CTL0 register.
3. Configure ADC_RSQx registers.
4. Configure ETMRC[1:0] bits in the ADC_CTL1 register if in need.
5. Prepare the DMA module to transfer data from the ADC_RDATA (refer to the spec of the DMA module).
6. Set the SWRCST bit, or generate an TRIGSEL trigger for the routine sequence.
7. Repeat step6 if in need.
8. Wait the EOC flag to be set.
9. Clear the EOC flag by writing 0 to it.

20.4.7. Conversion result threshold monitor function

Analog watchdog 0

The analog watchdog 0 is enabled when the RWD0EN bit in the ADC_CTL0 register is set for routine sequence. This function is used to monitor whether the conversion result exceeds the set thresholds, and when the analog voltage converted by the ADC is below a low threshold or above a high threshold, the WDE0 bit in ADC_STAT register will be set. An interrupt will be generated if the WDE0IE bit is set. The ADC_WDHT0 and ADC_WDLT0 registers are used to specify the high and low threshold. The comparison is done before the alignment, so the threshold values are independent of the alignment, which is specified by the DAL bit in the ADC_CTL1 register. One or more channels, which are select by the RWD0EN, WD0SC and WD0CHSEL[4:0] bits in ADC_CTL0 register, can be monitored by the analog watchdog 0.

Analog watchdog 1/2

The analog watchdog 1/2 are more flexible, and can configure the watchdog function of single or serveral channels.

The analog watchdog 1 function can be enabled by configuring the corresponding bits in the AWD1CS [21: 0] bits in the ADC_WD1SR register. Similarly, the watchdog 2 function can be configured. The high / low threshold of the analog watchdog 1/2 can be configured in the ADC_WDLT1, ADC_WDHT1, ADC_WDLT2 and ADC_WDHT2 registers.

Note: For ADC0/1, if OVSEN = 1, analog watchdog 0/1/2 can compare the analog voltage converted (after oversample) with a low threshold or a high threshold. If OVSEN = 0, analog watchdog 0/1/2 can compare the analog voltage converted (before oversample) with a low threshold or a high threshold.

20.4.8. Data storage mode

The alignment of data stored after conversion can be specified by DAL bit in the ADC_CTL1 register.

Figure 20-7. 14-bit Data storage mode

Routine channel data

0	0	D13	D12	D11	D10	D9	D8	D7	D6	D5	D4	D3	D2	D1	D0

DAL=0

Routine channel data

D13	D12	D11	D10	D9	D8	D7	D6	D5	D4	D3	D2	D1	D0	0	0

DAL=1

Figure 20-8. 12-bit Data storage mode

Routine channel data

0	0	0	0	D11	D10	D9	D8	D7	D6	D5	D4	D3	D2	D1	D0

DAL=0

Routine channel data

D11	D10	D9	D8	D7	D6	D5	D4	D3	D2	D1	D0	0	0	0	0

DAL=1

6-bit resolution data storage mode is different from 14-bit/12-bit/10-bit/8-bit resolution data storage mode, shown as ***Figure 20-9. 6-bit data storage mode***.

Figure 20-9. 6-bit data storage mode

Routine channel data

0	0	0	0	0	0	0	0	0	0	D5	D4	D3	D2	D1	D0

DAL=0

Routine channel data

0	0	0	0	0	0	0	0	D5	D4	D3	D2	D1	D0	0	0

DAL=1

NOTE: When OVSEN bit in the ADC_OVSAMPCTL register is set, the DAL bit value in the ADC_CTL1 register is ignored and the ADC only support LSB storage mode.

20.4.9. Sample time configuration

The number of CK_ADC cycles which is used to sample the input voltage can be specified by the RSMPn[9:0] bits in the ADC_RSQ0~ ADC_RSQ8 registers or ISMPn[9:0] bits in the ADC_ISQ0~ ADC_ISQ2. A different sample time can be specified for each sequence. For 12-bits resolution, the total sampling and conversion time is “sampling time + 12.5” CK_ADC cycles.

Example:

CK_ADC = 40MHz and sample time is 3.5 cycles, the total conversion time is “3.5+12.5” CK_ADC cycles, that means 0.4 us.

20.4.10. External trigger configuration

The conversion of routine sequence can be triggered by rising edge of TRIGSEL or software. The trigger source of routine sequence is controlled by the ETMRC[1:0] bits in the ADC_CTL1 register.

Table 20-4. Trigger source for routine channels for ADC0/ADC1/ADC2

ETMRC[1:0]	Trigger Source	Trigger Type
01, 10, 11	TRIGSEL	Signal from TRIGSEL
00	SWRCST	Software trigger

20.4.11. DMA request

The DMA request, which is enabled by the DMA bit of ADC_CTL1 register, is used to transfer data of routine sequence for conversion of more than one channel. The ADC generates a DMA request at the end of conversion of a routine channel. When this request is received, the DMA will transfer the converted data from the ADC_RDATA register to the destination location which is specified by the user.

20.4.12. Overflow detection

Overflow detection is enabled when DMA is enabled or EOCM bit in ADC_CTL1 is set. An overflow event occurs when a routine conversion is done before the prior routine data has been read out. The ROVF bit of the ADC_STAT is set. Overflow interrupt is generated if the ROVFIE bit in the ADC_CTL0 is set.

It is recommended to reinitialize the DMA module to recover the ADC from ROVF state. To ensure the routine converted data are transferred correctly, the internal state machine is reset. The ADC conversion will be stalled until the ROVF bit is cleared.

Software procedure for recovering the ADC from ROVF state:

1. Clear DMA bit of ADC_CTL1 to 0.
2. Clear ADCON bit of ADC_CTL1 to 0.
3. Clear CHEN bit of DMA_CHxCTL to 0 with reinit DMA module.
4. Clear ROVF bit of ADC_STAT to 0.
5. Set CHEN bit of DMA_CHxCTL to 1.
6. Set DMA bit of ADC_CTL1 to 1.
7. Set ADCON bit of ADC_CTL1 to 1.
8. Wait T(setup).
9. Start conversion with software or trigger.

20.4.13. ADC internal channels

When the TSVEN1 bit of ADC_CTL1 register is set, the temperature sensor channel (ADC2_CH18) is enabled. When the TSVEN2 bit of ADC_CTL1 register is set, the high-precison temperature sensor channel (ADC2_CH20) is enabled when the INREFEN bit of ADC_CTL1 register is set, the VREFINT channel (ADC1_CH17/ADC2_CH19) is enabled. The temperature sensor can be used to measure the ambient temperature of the device. The sensor output voltage can be converted into a digital value by ADC. The sampling time for the temperature sensor is recommended to be set to at least t_{s_temp} μs (please refer to the datasheet). When this sensor is not in use, it can be put in power down mode by resetting the

TSVEN1 or TSVEN2 bit.

The output voltage of the temperature sensor (only for normal temperature sensor) changes linearly with temperature. Because there is an offset, which is up to 45 °C and varies from chip to chip due to the chip production variation, the internal temperature sensor is more appropriate to detect temperature variations instead of absolute temperature. When it is used to detect accurate temperature, an external temperature sensor part should be used to calibrate the offset error.

The internal voltage reference (V_{REFINT}) provides a stable (bandgap) voltage output for the ADC and Comparators. V_{REFINT} is internally connected to the ADC1_CH17/ADC2_CH19 input channel.

To use the temperature sensor:

1. Configure the conversion sequence (ADC2_IN18) and the sampling time(t_{s_temp} μs) for the channel.
2. Enable the temperature sensor by setting the TSVEN1 bit in the ADC control register 1 (ADC_CTL1).
3. Start the ADC conversion by setting the ADCON bit or by the triggers.
4. Read the temperature data($V_{temperature}$) in the ADC data register, and get the temperature with the following equation.

   $$\text{Temperature (°C)} = \{(V_{25} - V_{temperature}) / \text{Avg_Slope}\} + 25.$$

   V_{25}: internal temperature sensor output voltage at 25°C, the typical value and factory calibration value address please refer to the datasheet (in the temperature sensor characteristics chapter).

   Avg_Slope: Average Slope for curve between Temperature vs. internal temperature sensor output voltage, the typical value please refer to the datasheet (in the temperature sensor characteristics chapter).

To use the high precison temperature sensor:

1. Configure the ADC clock(not greater than 5MHz).
2. Configure the conversion sequence (ADC2_CH20) and the sampling time(t_{s_temp} μs) for the channel.
3. Enable the temperature sensor by setting the TSVEN2 bit in the ADC control register 1 (ADC_CTL1).
4. Start the ADC conversion by setting the ADCON bit or by the triggers.
5. Read the temperature data($V_{temperature}$) in the ADC data register, and get the temperature with the following equation.

   $$\text{Temperature (°C)} = \{(V_{temperature} - V_{25}) / \text{Avg_Slope}\} + 25.$$

   V_{25}: internal temperature sensor output voltage at 25°C, the typical value and factory calibration value address please refer to the datasheet (in the high-precision temperature sensor characteristics chapter).

   Avg_Slope: Average Slope for curve between Temperature vs. Vtemperature, the typical

value please refer to the datasheet (in the high-precision temperature sensor characteristics chapter).

Note:

1) After the high precison temperature sensor is enabled, it is necessary to wait for at least 3 ADC sampling cycles before the ADC conversion code value is considered valid, and the first 3 conversion data should be discarded;
2) The sampling accuracy of high precison temperature sensor can be improved by means of hardware on chip over sampling or software averaging.

20.4.14. Battery voltage monitoring

The V_{BAT} channel can be used to measure the backup battery voltage on the V_{BAT} pin. When the VBATEN bit in ADC_CTL1 register is set, V_{BAT} channel (ADC1_IN16 / ADC2_IN17) is enabled and a bridge divider by 4 integrated on the V_{BAT} pin is also enabled automatically with it. As V_{BAT} may be higher than V_{DDA}, this bridge is used to ensure the ADC correct operation. And it connects V_{BAT} / 4 to the ADC1_IN16 / ADC2_IN17 input channel. So, the converted digital value is V_{BAT} / 4. In order to prevent unnecessary battery energy consumption, it is recommended that the bridge will be enabled only when it is required.

20.4.15. Using HPDF to managing the conversion results

High-Performance Digital Filter (HPDF)can be used to manage the ADC conversion results. In this situation, The HPDFCFG bit must be set to 1 and DMA bit must be cleared to 0. The ADC transfers 16 least significant bits of the routine data register data to the HPDF, which in turns will reset the EOC flag once the transfer is complete. As shown in ***Figure 20-10. Schematic diagram of handshake signal between HPDF and ADC module***.

Figure 20-10. Schematic diagram of handshake signal between HPDF and ADC module

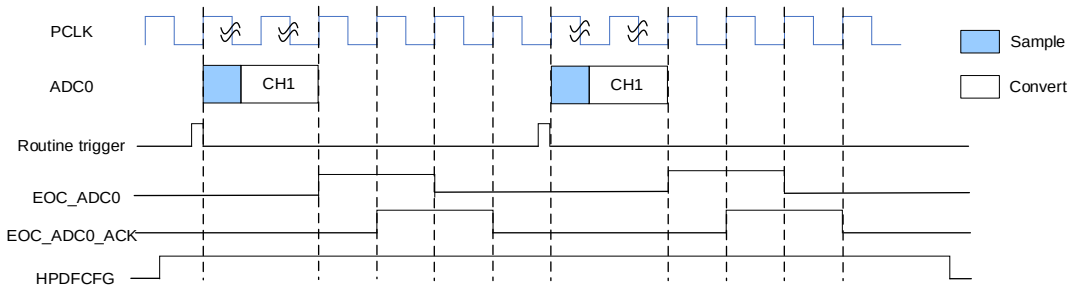

20.4.16. Programmable resolution (DRES)

The resolution can be configured to be either 14, 12, 10, 8, or 6 bits by programming the DRES[1:0] bits in the ADC_CTL0 register. For applications that do not require high data accuracy, lower resolution allows faster conversion time. The DRES[1:0] bits must only be changed when the ADCON bit is reset. Lower resolution reduces the conversion time needed for the successive approximation steps as shown in ***Table 20-5. tCONV timings depending on resolution for ADC0 and ADC1***, ***Table 20-6. tCONV timings depending on resolution***

for ADC2.

Table 20-5. t_{CONV} timings depending on resolution for ADC0 and ADC1

DRES[1:0] bits	t_{CONV} (ADC clock cycles)	t_{CONV}(ns) at f_{ADC}=72MHz	t_{SMPL}(min) (ADC clock cycles)	t_{ADC} (ADC clock cycles)	t_{ADC}(us) at f_{ADC}=72MHz
14	14.5	201.39 ns	3.5	18	250 ns
12	12.5	173.61 ns	3.5	16	222.22 ns
10	10.5	145.83 ns	3.5	14	194.5 ns
8	8	118.06 ns	3.5	12	166.67 ns

Table 20-6. t_{CONV} timings depending on resolution for ADC2

DRES[1:0] bits	t_{CONV} (ADC clock cycles)	t_{CONV}(ns) at f_{ADC}=80MHz	t_{SMPL}(min) (ADC clock cycles)	t_{ADC} (ADC clock cycles)	t_{ADC}(us) at f_{ADC}=80MHz
12	12.5	156.25 ns	2.5	15	187.5 ns
10	10.5	121.25 ns	2.5	13	162.5 ns
8	8.5	106.25ns	2.5	11	137.5ns
6	6.5	81.25 ns	2.5	9	112.5ns

20.4.17. On-chip hardware oversampling

The on-chip hardware oversampling circuit performs data preprocessing to offload the CPU. It can handle multiple conversions and average them into a single data with increased data width, up to 32-bit in ADC0 and ADC1, up to 16-bit in ADC2.The on-chip hardware oversampling circuit is enabled by OVSEN bit in the ADC_OVSAMPCTL register. It provides a result with the following form, where N and M can be adjusted, and Dout(n) is the n-th output digital signal of the ADC:

$$\text{Result}=\frac{1}{M}*\sum_{n=0}^{N-1} D_{out}(n) \qquad (20\text{-}2)$$

For 14bit-ADC, the on-chip hardware oversampling circuit performs the following functions: summing and bit right shifting. The oversampling ratio N is defined by the OVSR[9:0] bits in the ADC_OVSAMPCTL register. It can range from 2x to1024x. The division coefficient M means bit right shifting up to 11-bit. It is configured through the OVSS[3:0] bits in the ADC_OVSAMPCTL register.

For 14bit-ADC, summation units can produce up to 24 bits (1024 x 14bit), which is first shifted right. Then store the data into register.

For 12bit-ADC, the on-chip hardware oversampling circuit performs the following functions: summing and bit right shifting. The oversampling ratio N is defined by the OVSR[7:0] bits in the ADC_OVSAMPCTL register. It can range from 2x to 256x. The division coefficient M means bit right shifting up to 8-bit. It is configured through the OVSS[3:0] bits in the ADC_OVSAMPCTL register.

For 12bit-ADC, summation units can produce up to 20 bits (256 x 12-bit), which is first shifted right. The upper bits of the result are then truncated, keeping only the 16 least significant bits rounded to the nearest value using the least significant bits left apart by the shifting, before being finally transferred into the data register.

Figure 20-11. 20-bit to 16-bit result truncation (for 12bit ADC)

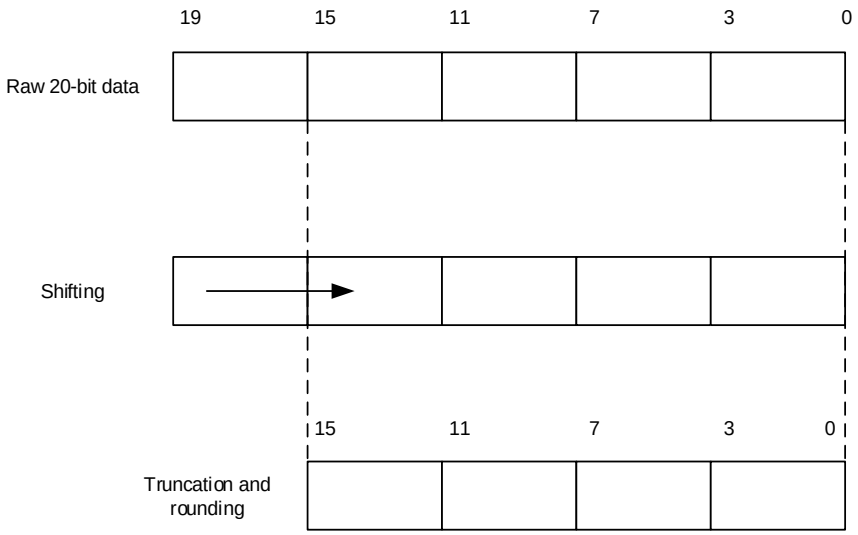

Note: If the intermediate result after the shifting exceeds 16 bits, the upper bits of the result are simply truncated.

*Figure 20-11. 20-bit to 16-bit result truncation (for 12bit ADC)*shows a numerical example of the processing, from a raw 20-bit accumulated data to the final 16-bit result.

Figure 20-12. Numerical example with 5-bits shift and rounding (for 12bit ADC)

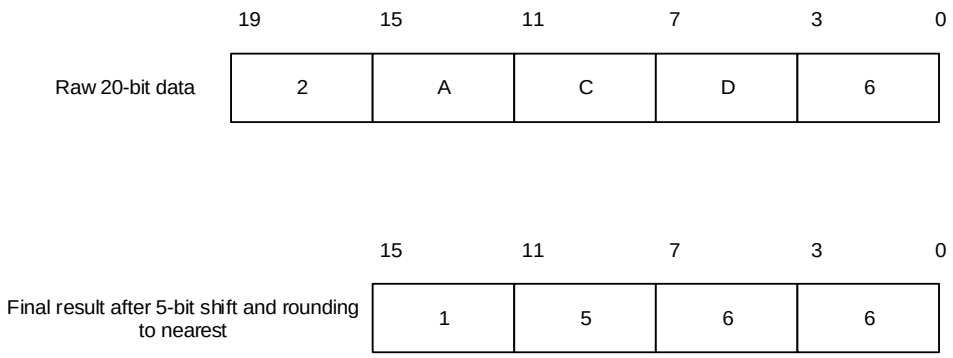

Figure 20-13. 14bit ADC oversampling with 10bits right shift

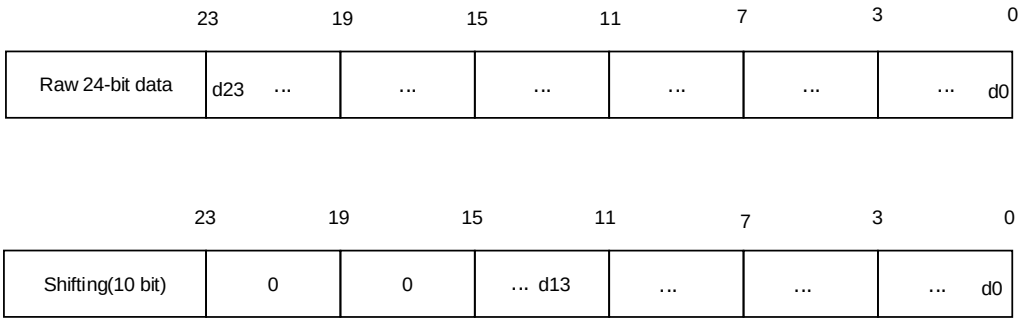

Figure 20-14. Numerical example for 14bit ADC oversampling with 10bits right shift

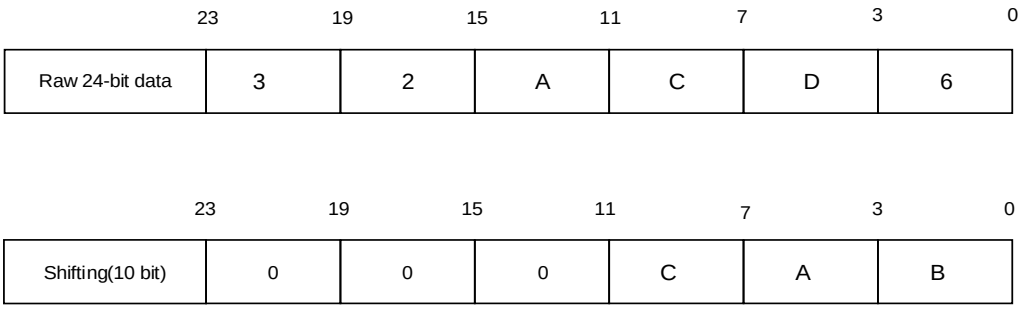

The ***Table 20-7. Some examples show the maximum output results for N and M combimations (grayed values indicates truncation，for 12bit ADC)*** below gives the data format for the various N and M combination, for a raw conversion data equal to 0xFFF.

Table 20-7. Some examples show the maximum output results for N and M combimations (grayed values indicates truncation，for 12bit ADC)

Oversampling ratio	Max Raw data	No-shift OVSS=0000	1-bit shift OVSS=0001	2-bit shift OVSS=0010	3-bit shift OVSS=0011	4-bit shift OVSS=0100	5-bit shift OVSS=0101	6-bit shift OVSS=0110	7-bit shift OVSS=0111	8-bit shift OVSS=1000
2x	0x1FFE	0x1FFE	0x0FFF	0x07FF	0x03FF	0x01FF	0x00FF	0x007F	0x003F	0x001F
4x	0x3FFC	0x3FFC	0x1FFE	0x0FFF	0x07FF	0x03FF	0x01FF	0x00FF	0x007F	0x003F
8x	0x7FF8	0x7FF8	0x3FFC	0x1FFE	0x0FFF	0x07FF	0x03FF	0x01FF	0x00FF	0x007F
16x	0xFFF0	0xFFF0	0x7FF8	0x3FFC	0x1FFE	0x0FFF	0x07FF	0x03FF	0x01FF	0x00FF
32x	0x1FFE0	0xFFE0	0xFFF0	0x7FF8	0x3FFC	0x1FFE	0x0FFF	0x07FF	0x03FF	0x01FF
64x	0x3FFC0	0xFFC0	0xFFE0	0xFFF0	0x7FF8	0x3FFC	0x1FFE	0x0FFF	0x07FF	0x03FF
128x	0x7FF80	0xFF80	0xFFC0	0xFFE0	0xFFF0	0x7FF8	0x3FFC	0x1FFE	0x0FFF	0x07FF
256x	0xFFF00	0xFF00	0xFF80	0xFFC0	0xFFE0	0xFFF0	0x7FF8	0x3FFC	0x1FFE	0x0FFF
512x	0x1FFE00	0xFE00	0xFF00	0xFF80	0xFFC0	0xFFE0	0xFFF0	0x7FF8	0x3FFC	0x1FFE
1024x	0x3FFC00	0xFC00	0xFE00	0xFF00	0xFF80	0xFFC0	0xFFE0	0xFFF0	0x7FF8	0x3FFC

When compared to standard conversion mode, the conversion timings of oversampling mode do not change, and the sampling time is maintained the same as that of standard conversion mode during the whole oversampling sequence. New data is supplied every N conversions,

and the equivalent delay is equal to:

$$N \times t_{ADC} = N \times (t_{SMPL} + t_{CONV}) \quad (20\text{-}3)$$

20.5. ADC sync mode

In devices with two ADCs, the ADC sync mode can be used.

In ADC sync mode, the conversion of ADC1 are synchronized by the triggers of ADC0. The two ADCs convert parallelly or rotately, according to the mode selected by the SYNCM[3:0] bits in ADC_SYNCCTL register.

In ADC sync mode, when the conversion is configured to be triggered by an external event, the external trigger must be disabled for ADC1. The converted data of routine sequence is stored in the ADC sync routine data register (ADC_SYNCDATA0 or ADC_SYNCDATA1).

The following modes can be configured in ***Table 20-8. ADC sync mode table***.

Table 20-8. ADC sync mode table

SYNCM[3: 0]	mode
0000	Free mode
0110	Routine parallel mode
0111	Routine follow-up mode

When the ADCs are in a sync mode other than free mode, they shold be configured to free mode before being configured to another sync mode.

The ADC sync scheme is shown in ***Figure 20-15. ADC sync block diagram*** .

Figure 20-15. ADC sync block diagram

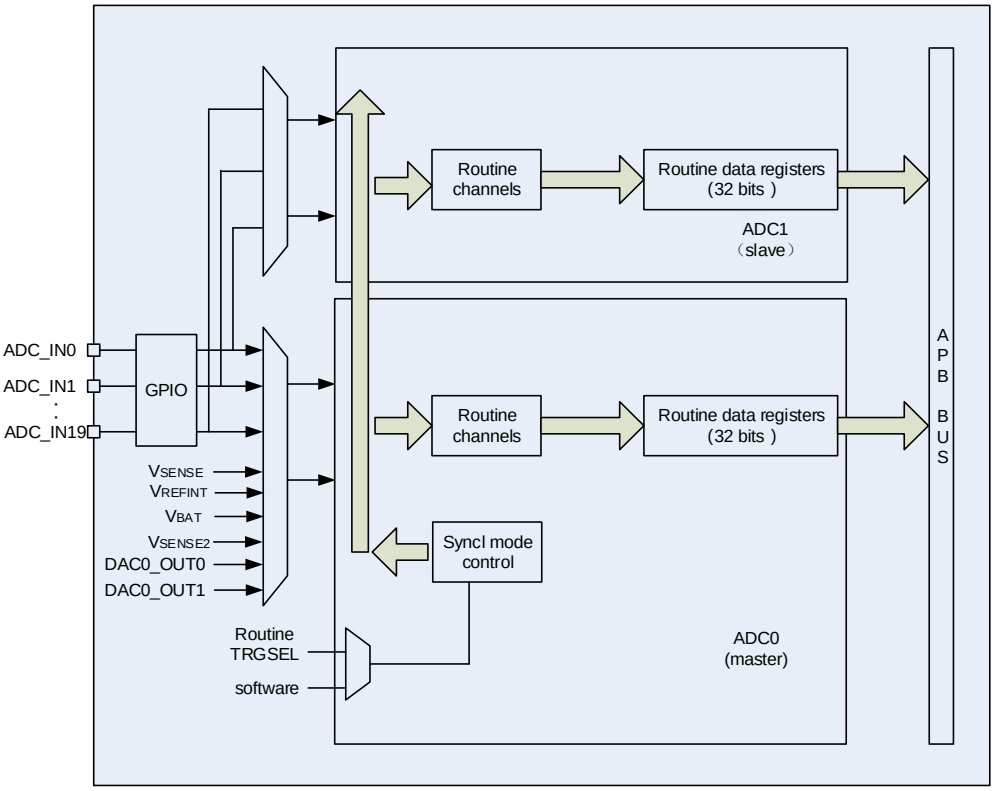

20.5.1. Free mode

In this mode, the ADC synchronization is bypassed, and each ADC works freely.

20.5.2. Routine parallel mode

The routine parallel mode is enabled by setting the SYNCM[3:0] bits in the ADC_SYNCCTL register to 0110. In the routine parallel mode, all of the ADCs convert the routine sequence at the selected external trigger of ADC0. The triggers is selected by configuring the ETMRC[1:0] bits in the ADC_CTL1 register of ADC0.

EOC interrupts (if enabled on the ADC interfaces) are generated at the end of conversion events according to the EOCM bit in the ADC_CTL1 register. The behavior of routine parallel mode is shown in the ***Figure 20-16. Routine parallel mode on 16 channels*** .

Figure 20-16. Routine parallel mode on 16 channels

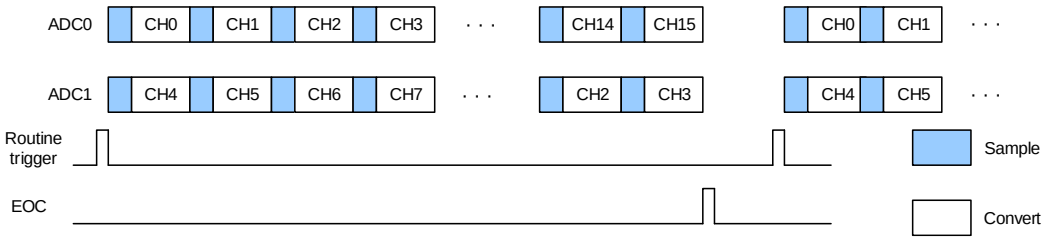

Note:

1. Do not convert the same channel on two ADCs at a given time (no overlapping sampling times for the ADCs when converting the same channel).
2. Make sure to trigger the ADCs when none of them is converting (do not trigger ADC0 when some of the conversions are not finished).

20.5.3. Routine follow-up mode

The routine follow-up mode is enabled by setting the SYNCM[3:0] bits in the ADC_SYNCCTL register to 0111. In the follow-up mode, ADC0 converts the routine channel at the selected external trigger. The triggers are selected by configuring the ETMRC[1:0] bits in the ADC_CTL1 register of ADC0. After a delay time, ADC1 converts the routine channel. The routine channel in above descriptions only includes one routine channel.

The delay time between two consecutive sample phase is configured by the SYNCDLY[3:0] bits in the ADC_SYNCCTL register. To prevent more than one ADCs from sampling the same channel at a given time, if the delay time configured by the SYNCDLY bits is shorter than the sample time, the delay time of (sample time + 2) CK_ADC cycles will be used.

If the CNT bit in ADC_CTL1 register is set, the selected routine channels are continuously converted. EOC interrupts (if enabled on the ADC interfaces) are generated at the end of conversion events according to the EOCM bit in the ADC_CTL1 register. The behavior of follow-up mode is shown in the ***Figure 20-17. Routine follow-up mode on 1 channel in continuous operation*** **mode** .

Figure 20-17. Routine follow-up mode on 1 channel in continuous operation mode

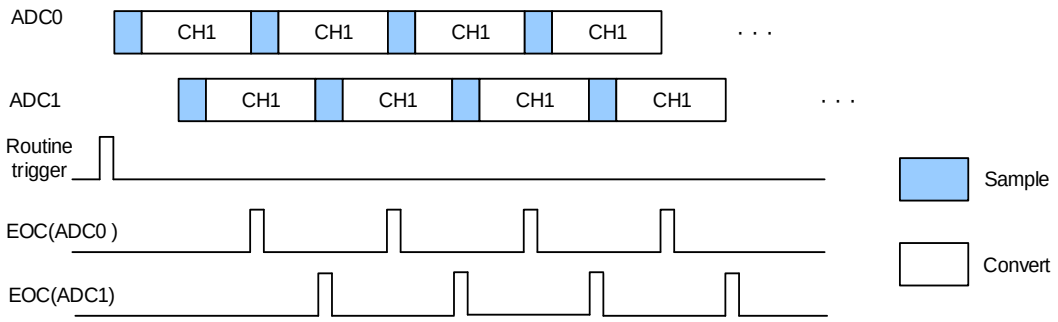

Note:

1. Do not convert the same channel on two ADCs at a given time (no overlapping sampling times for the two ADCs when converting the same channel).
2. Make sure to trigger the ADCs when none of them is converting (do not trigger ADC0 when some of the conversions are not finished).

20.5.4. Use DMA in ADC sync mode

In ADC sync mode, the converted data of routine channels are stored in the ADC sync routine data register (ADC_SYNCDATA0 or ADC_SYNCDATA1). DMA can be used to transfer data

from ADC_SYNCDATA0 or ADC_SYNCDATA1 register. There are two DMA work modes, which can work well with the various ADC sync modes.

ADC sync DMA mode 0

In ADC sync DMA mode 0, the bitwidth of DMA transfer is 32. One DMA request transfers one data, which is selected from the routine data of the ADCs in turn. For every request, the source address of the DMA channel should be fixed to the ADC_SYNCDATA1 register, while the content of the ADC_SYNCDATA changes to the data that is to be transferred. When ADC0 and ADC1 work in SYNC mode, the transfer sequence is ADC0_RDATA[31:0] -> ADC1_RDATA[31:0] -> ADC0_RDATA[31:0] -> ADC1_RDATA[31:0].

The ADC Sync DMA mode 0 is properly for:

- ADC0 and ADC1 work in routine parallel mode (SYNCM=0110).

ADC sync DMA mode 1

In ADC sync DMA mode 1, the bitwidth of DMA transfer is 32. One DMA request transfers two data, which are selected from the routine data of the ADCs in turn. For every request, the source address of the DMA channel should be fixed to the ADC_SYNCDATA0 register, while the content of the ADC_SYNCDATA changes to the data that is to be transferred. When ADC0 and ADC1 works in SYNC mode, the transfer data are always {ADC1_RDATA[15:0], ADC0_RDATA[15:0]}.

The ADC Sync DMA mode 1 is properly for:

- ADC0 and ADC1 work in routine parallel mode (SYNCM=0110).
- ADC0 and ADC1 work in routine follow-up mode (SYNCM=0111).

20.6. ADC interrupts

The interrupt can be produced on one of the events:

- End of conversion for routine sequence.
- The analog watchdog event.
- Overflow event.

The interrupts of ADC0, ADC1 and ADC2 are mapped into the same interrupt vector IRQ18.

20.7. Register definition

ADC0 base address: 0x4001 2400

ADC1 base address: 0x4001 2800

ADC2 base address: 0x4001 2C00

20.7.1. Status register (ADC_STAT)

Address offset: 0x00
Reset value: 0x0000 0000

This register has to be accessed by word (32-bit).

31	30	29	28	27	26	25	24	23	22	21	20	19	18	17	16
WDE2	WDE1	Reserved													
rc_w0	rc_w0														

15	14	13	12	11	10	9	8	7	6	5	4	3	2	1	0
Reserved										ROVF	STRC	Reserved		EOC	WDE0
										rc_w0	rc_w0			rc_w0	rc_w0

Bits	Fields	Descriptions
31	WDE2	Analog watchdog 2 event flag 0: No analog watchdog 2 event 1: Analog watchdog 2 event Set by hardware when the converted voltage crosses the values programmed in the ADC_WDLT2 and ADC_WDLT2 register. Cleared by software writing 0 to it.
30	WDE1	Analog watchdog 1 event flag 0: No analog watchdog 1 event 1: Analog watchdog 1 event Set by hardware when the converted voltage crosses the values programmed in the ADC_WDLT1 and ADC_WDLT1 register. Cleared by software writing 0 to it.
29:6	Reserved	Must be kept at reset value.
5	ROVF	Routine sequence data register overflow 0: Routine sequence data register not overflow 1: Routine sequence data register overflow This bit is set by hardware when the routine sequence data registers are overflow, in single mode or multi mode. This flag is only set when DMA is enabled or end of conversion mode is set to 1(EOCM=1). The recent routine sequence data is lost when this bit is set. Cleared by software writing 0 to it.
4	STRC	Start flag of routine sequence conversion

		0: Conversion is not started 1: Conversion is started Set by hardware when routine sequence conversion starts. Cleared by software writing 0 to it.
3:2	Reserved	Must be kept at reset value.
1	EOC	End flag of routine sequence conversion 0: No end of routine sequence conversion 1: End ofroutine sequence conversion Set by hardware at the end of a routine sequence conversion. Cleared by software writing 0 to it or by reading the ADC_RDATA register.
0	WDE0	Analog watchdog 0 event flag 0: No analog watchdog 0 event 1: Analog watchdog 0 event Set by hardware when the converted voltage crosses the values programmed in the ADC_WDLT and ADC_WDHT registers. Cleared by software writing 0 to it.

20.7.2. Control register 0 (ADC_CTL0)

Address offset: 0x04

Reset value: 0x0000 0000

This register has to be accessed by word (32-bit).

31	30	29	28	27	26	25	24	23	22	21	20	19	18	17	16
WDE2IE	WDE1IE	Reserved			ROVFIE	DRES[1:0]		RWD0EN	Reserved						
rw	rw				rw	rw		rw							

15	14	13	12	11	10	9	8	7	6	5	4	3	2	1	0
DISNUM[2:0]			Reserved	DISRC	Reserved	WD0SC	SM	Reserved	WDE0IE	EOCIE	WD0CHSEL[4:0]				
rw				rw		rw	rw		rw	rw	rw				

Bits	Fields	Descriptions
31	WDE2IE	Interrupt enable for WDE2 0: WDE2 interrupt disable 1: WDE2 interrupt enable
30	WDE1IE	Interrupt enable for WDE1 0: WDE1 interrupt disable 1: WDE1 interrupt enable
29:27	Reserved	Must be kept at reset value.
26	ROVFIE	Interrupt enable for ROVF 0: ROVF interrupt disable 1: ROVF interrupt enable

25:24	DRES[1:0]	ADC data resolution for ADC0/ADC1 00: 14bit 01: 12bit 10: 10bit 11: 8bit ADC data resolution for ADC2 00: 12bit 01: 10bit 10: 8bit 11: 6bit
23	RWD0EN	Routine channel analog watchdog 0 enable 0: Routine channel analog watchdog 0 disable 1: Routine channel analog watchdog 0 enable
22:16	Reserved	Must be kept at reset value.
15:13	DISNUM[2:0]	Number of conversions in discontinuous mode The number of channels to be converted after a trigger will be DISNUM+1
12	Reserved	Must be kept at reset value.
11	DISRC	Discontinuous mode on routine sequence 0: Discontinuous operation mode disable 1: Discontinuous operation mode enable
10	Reserved	Must be kept at reset value.
9	WD0SC	When in scan mode, analog watchdog 0 is effective on a single channel 0: Analog watchdog 0 is effective on all channels 1: Analog watchdog 0 is effective on a single channel
8	SM	Scan mode 0: Scan operation mode disable 1: Scan operation mode enable
7	Reserved	Must be kept at reset value.
6	WDE0IE	Interrupt enable for WDE0 0: Interrupt disable 1: Interrupt enable
5	EOCIE	Interrupt enable for EOC 00: Interrupt disable 1: Interrupt enable
4:0	WD0CHSEL[4:0]	Analog watchdog 0 channel select 00000: ADC channel0 00001: ADC channel1 00010: ADC channel2

00011: ADC channel 3
00100: ADC channel 4
00101: ADC channel 5
00110: ADC channel 6
00111: ADC channel 7
01000: ADC channel 8
01001: ADC channel 9
01010: ADC channel 10
01011: ADC channel 11
01100: ADC channel 12
01101: ADC channel 13
01110: ADC channel 14
01111: ADC channel15
10000: ADC channel16
10001: ADC channel17
10010: ADC channel18
10011: ADC channel19
10100: ADC channel20
Other values are reserved.

Note: ADC0 analog inputs Channel20 is internally connected to DAC0_OUT0. ADC1 analog inputs Channel16、Channel17、Channel20 are internally connected to the battery、V_{REFINT} inputs and DAC0_OUT1. ADC2 analog inputs Channel17、Channel18、Channel Channel19、Channel20 are internally connected to the battery、tempeture sensor、V_{REFINT} inputs and high-precision tempeture sensor.

20.7.3. Control register 1 (ADC_CTL1)

Address offset: 0x08
Reset value: 0x0000 0000

This register has to be accessed by word (32-bit).

31	30	29	28	27	26	25	24	23	22	21	20	19	18	17	16
TSVEN2	SWRCST	ETMRC[1:0]		CALMOD	Reserved	VBATEN	INREFEN	TSVEN1	Reserved						
rw	rw	rw		rw		rw	rw	rw							

15	14	13	12	11	10	9	8	7	6	5	4	3	2	1	0
Reserved			HPDFCFG	DAL	EOCM	DDM	DMA	Reserved	CALNUM[2:0]			RSTCLB	CLB	CTN	ADCON
			rw	rw	rw	rw	rw		rw			rw	rw	rw	rw

Bits	Fields	Descriptions
31	TSVEN2	This bit can be set or cleared by software in ADC2. Channel 20(high-precision temperature sensor) enable of ADC2. 0: high-precision temperature sensor Channel disable

		1: high-precision temperature sensor Channel enable
30	SWRCST	Software start conversion of routine sequence . Setting 1 on this bit starts a conversion of a routine sequence channels. It is set by software and cleared by software or by hardware immediately after the conversion starts.
29:28	ETMRC[1:0]	External trigger mode for routine sequence 00: External trigger for routine sequence disable 01: Rising edge of external trigger for routine sequence enable 10: Falling edge of external trigger for routine sequence enable 11: Rising and falling edge of external trigger for routine sequence enable
27	CALMOD	ADC calibration mode (for ADC0/1) 0: offset、mismatch mode 1: offset mode
26	Reserved	Must be kept at reset value.
25	VBATEN	This bit can be set or cleared by software in ADC2. Channel 16 (1/4 voltage of external battery) enable of ADC1 Channel 17 (1/4 voltage of external battery) enable of ADC2 0: 1/4 voltage of external battery Channel disable 1: 1/4 voltage of external battery Channel enable
24	INREFEN	This bit can be set or cleared by software in ADC2. Channel 17 (internal reference voltage) enable of ADC1. Channel 19 (internal reference voltage) enable of ADC2. 0: internal reference voltage Channel disable 1: internal reference voltage Channel enable
23	TSVEN1	This bit can be set or cleared by software in ADC2. Channel 18(temperature sensor) enable of ADC2. 0: temperature sensor Channel disable 1: temperature sensor Channel enable
22:13	Reserved	Must be kept at reset value.
12	HPDFCFG	HPDF mode configuration To enable the HPDF mode, this bit is set and cleared by software. It is only valid when DMA=0. 0: HPDF mode disabled 1: HPDF mode enabled
11	DAL	Data alignment 0: LSB alignment 1: MSB alignment
10	EOCM	End of conversion mode

		0: Only at the end of a routine sequence conversions, the EOC bit is set. Overflow detection is disabled unless DMA=1. 1: At the end of each routine sequence conversion, the EOC bit is set. Overflow is detected automatically
9	DDM	DMA disable mode This bit configure the DMA disable mode for single ADC mode 0: The DMA engine is disabled after the end of transfer signal from DMA controller is detected. 1: When DMA=1, the DMA engine issues a request at end of each routine sequence conversion.
8	DMA	DMA request enable. 0: DMA request disable 1: DMA request enable
7	Reserved	Must be kept at reset value.
6:4	CALNUM[2:0]	Calibration Times These bits define the calibration times for ADC. 000:1 time 001:2 times 010:4times 011:8times 100:16times 101:32times(only for 12-bit ADC) Others:reserved.
3	RSTCLB	Reset calibration This bit is set by software and cleared by hardware after the calibration registers are initialized. 0: Calibration register initialize done. 1: Initialize calibration register start
2	CLB	ADC calibration 0: Calibration done 1: Calibration start
1	CTN	Continuous mode 0: Continuous operation mode disable 1: Continuous operation mode enable
0	ADCON	ADC ON. The ADC will be wake up when this bit is changed from low to high and take a stabilization time. For power saving, when this bit is reset, the analog submodule will be put into powerdown mode. 0: ADC disable and power down 1: ADC enable

20.7.4. Watchdog high threshold register0 (ADC_WDHT0)

Address offset: 0x1C

Reset value: 0x00FF FFFF

This register has to be accessed by word (32-bit).

31	30	29	28	27	26	25	24	23	22	21	20	19	18	17	16
Reserved								WDHT0[23:16]							
								rw							

15	14	13	12	11	10	9	8	7	6	5	4	3	2	1	0
WDHT0[15:0]															
rw															

Bits	Fields	Descriptions
31:24	Reserved	Must be kept at reset value.
23:0	WDHT0[23:0]	High threshold for analog watchdog 0, For ADC0/ADC1 are WDHT0[23:0], for ADC2 is WDHT0[11:0]. These bits define the high threshold for the analog watchdog 0.

20.7.5. Watchdog low threshold register0 (ADC_WDLT0)

Address offset: 0x20

Reset value: 0x0000 0000

This register has to be accessed by word (32-bit).

31	30	29	28	27	26	25	24	23	22	21	20	19	18	17	16
Reserved								WDLT0[23:16]							
								rw							

15	14	13	12	11	10	9	8	7	6	5	4	3	2	1	0
WDLT0[15:0]															
rw															

Bits	Fields	Descriptions
31:24	Reserved	Must be kept at reset value.
23:0	WDLT0[23:0]	Low threshold for analog watchdog 0. For ADC0/ADC1 are WDLT0[23:0], for ADC2 is WDLT0[11:0]. These bits define the low threshold for the analog watchdog.

20.7.6. Routine sequence register 0 (ADC_RSQ0)

Address offset: 0x24

Reset value: 0x0000 0000

This register has to be accessed by word (32-bit).

31	30	29	28	27	26	25	24	23	22	21	20	19	18	17	16
Reserved								RL[3:0]				Reserved			
								rw							

15	14	13	12	11	10	9	8	7	6	5	4	3	2	1	0
Reserved	RSMP15[9:0]										RSQ15[4:0]				
	rw										rw				

Bits	Fields	Descriptions
31:24	Reserved	Must be kept at reset value.
23:20	RL[3:0]	Routine channel length. The total number of conversion in routine sequence equals to RL[3:0]+1.
19:15	Reserved	Must be kept at reset value.
14:5	RSMP15[9:0]	Routine sequence sample time 10’d0: For ADC0/1 is 3.5 cycles, For ADC2 is 2.5 cycles 10’d1: For ADC0/1 is 4.5 cycles, For ADC2 is 3.5 cycles 10’d2: For ADC0/1 is 5.5 cycles, For ADC2 is 4.5 cycles 10’d3: For ADC0/1 is 6.5 cycles, For ADC2 is 5.5 cycles 10’d4: For ADC0/1 is 7.5 cycles, For ADC2 is 6.5 cycles …… 10’d638: For ADC0/1 is 641.5 cycles, For ADC2 is 640.5 cycles 10’d639: Only for ADC0/1 is 642.5 cycles …… 10’d807: Only for ADC0/1 is 810.5 cycles
4:0	RSQ15[4:0]	refer to RSQ0[4:0] description

20.7.7. Routine sequence register 1 (ADC_RSQ1)

Address offset: 0x28

Reset value: 0x0000 0000

This register has to be accessed by word (32-bit).

31	30	29	28	27	26	25	24	23	22	21	20	19	18	17	16
Reserved	RSMP14[9:0]										RSQ14[4:0]				
	rw										rw				

15	14	13	12	11	10	9	8	7	6	5	4	3	2	1	0
Reserved	RSMP13[9:0]										RSQ13[4:0]				
	rw										rw				

Bits	Fields	Descriptions
31	Reserved	Must be kept at reset value.
30:21	RSMP14[9:0]	Routine sequence sample time

		10’d0: For ADC0/1 is 3.5 cycles, For ADC2 is 2.5 cycles 10’d1: For ADC0/1 is 4.5 cycles, For ADC2 is 3.5 cycles 10’d2: For ADC0/1 is 5.5 cycles, For ADC2 is 4.5 cycles 10’d3: For ADC0/1 is 6.5 cycles, For ADC2 is 5.5 cycles 10’d4: For ADC0/1 is 7.5 cycles, For ADC2 is 6.5 cycles …… 10’d638: For ADC0/1 is 641.5 cycles, For ADC2 is 640.5 cycles 10’d639: Only for ADC0/1 is 642.5 cycles …… 10’d807: Only for ADC0/1 is 810.5 cycles
20:16	RSQ14[4:0]	refer to RSQ0[4:0] description
15	Reserved	Must be kept at reset value.
14:5	RSMP13[9:0]	Routine sequence sample time 10’d0: For ADC0/1 is 3.5 cycles, For ADC2 is 2.5 cycles 10’d1: For ADC0/1 is 4.5 cycles, For ADC2 is 3.5 cycles 10’d2: For ADC0/1 is 5.5 cycles, For ADC2 is 4.5 cycles 10’d3: For ADC0/1 is 6.5 cycles, For ADC2 is 5.5 cycles 10’d4: For ADC0/1 is 7.5 cycles, For ADC2 is 6.5 cycles …… 10’d638: For ADC0/1 is 641.5 cycles, For ADC2 is 640.5 cycles 10’d639: Only for ADC0/1 is 642.5 cycles …… 10’d807: Only for ADC0/1 is 810.5 cycles
4:0	RSQ13[4:0]	refer to RSQ0[4:0] description

20.7.8. Routine sequence register 2 (ADC_RSQ2)

Address offset: 0x2C

Reset value: 0x0000 0000

This register has to be accessed by word (32-bit).

31	30	29	28	27	26	25	24	23	22	21	20	19	18	17	16
Reserved	RSMP12[9:0]										RSQ12[4:0]				
	rw										rw				

15	14	13	12	11	10	9	8	7	6	5	4	3	2	1	0
Reserved	RSMP11[9:0]										RSQ11[4:0]				
	rw										rw				

Bits	Fields	Descriptions
31	Reserved	Must be kept at reset value.
30:21	RSMP12[9:0]	Routine sequence sample time

		10’d0: For ADC0/1 is 3.5 cycles, For ADC2 is 2.5 cycles 10’d1: For ADC0/1 is 4.5 cycles, For ADC2 is 3.5 cycles 10’d2: For ADC0/1 is 5.5 cycles, For ADC2 is 4.5 cycles 10’d3: For ADC0/1 is 6.5 cycles, For ADC2 is 5.5 cycles 10’d4: For ADC0/1 is 7.5 cycles, For ADC2 is 6.5 cycles …… 10’d638: For ADC0/1 is 641.5 cycles, For ADC2 is 640.5 cycles 10’d639: Only for ADC0/1 is 642.5 cycles …… 10’d807: Only for ADC0/1 is 810.5 cycles
20:16	RSQ12[4:0]	refer to RSQ0[4:0] description
15	Reserved	Must be kept at reset value.
14:5	RSMP11[9:0]	Routine sequence sample time 10’d0: For ADC0/1 is 3.5 cycles, For ADC2 is 2.5 cycles 10’d1: For ADC0/1 is 4.5 cycles, For ADC2 is 3.5 cycles 10’d2: For ADC0/1 is 5.5 cycles, For ADC2 is 4.5 cycles 10’d3: For ADC0/1 is 6.5 cycles, For ADC2 is 5.5 cycles 10’d4: For ADC0/1 is 7.5 cycles, For ADC2 is 6.5 cycles …… 10’d638: For ADC0/1 is 641.5 cycles, For ADC2 is 640.5 cycles 10’d639: Only for ADC0/1 is 642.5 cycles …… 10’d807: Only for ADC0/1 is 810.5 cycles
4:0	RSQ11[4:0]	refer to RSQ0[4:0] description

20.7.9. Routine sequence register 3 (ADC_RSQ3)

Address offset: 0x30

Reset value: 0x0000 0000

This register has to be accessed by word (32-bit).

31	30	29	28	27	26	25	24	23	22	21	20	19	18	17	16
Reserved	RSMP10[9:0]										RSQ10[4:0]				
	rw										rw				

15	14	13	12	11	10	9	8	7	6	5	4	3	2	1	0
Reserved	RSMP9[9:0]										RSQ9[4:0]				
	rw										rw				

Bits	Fields	Descriptions
31	Reserved	Must be kept at reset value.
30:21	RSMP10[9:0]	Routine sequence sample time

		10’d0: For ADC0/1 is 3.5 cycles, For ADC2 is 2.5 cycles 10’d1: For ADC0/1 is 4.5 cycles, For ADC2 is 3.5 cycles 10’d2: For ADC0/1 is 5.5 cycles, For ADC2 is 4.5 cycles 10’d3: For ADC0/1 is 6.5 cycles, For ADC2 is 5.5 cycles 10’d4: For ADC0/1 is 7.5 cycles, For ADC2 is 6.5 cycles …… 10’d638: For ADC0/1 is 641.5 cycles, For ADC2 is 640.5 cycles 10’d639: Only for ADC0/1 is 642.5 cycles …… 10’d807: Only for ADC0/1 is 810.5 cycles
20:16	RSQ10[4:0]	refer to RSQ0[4:0] description
15	Reserved	Must be kept at reset value.
14:5	RSMP9[9:0]	Routine sequence sample time 10’d0: For ADC0/1 is 3.5 cycles, For ADC2 is 2.5 cycles 10’d1: For ADC0/1 is 4.5 cycles, For ADC2 is 3.5 cycles 10’d2: For ADC0/1 is 5.5 cycles, For ADC2 is 4.5 cycles 10’d3: For ADC0/1 is 6.5 cycles, For ADC2 is 5.5 cycles 10’d4: For ADC0/1 is 7.5 cycles, For ADC2 is 6.5 cycles …… 10’d638: For ADC0/1 is 641.5 cycles, For ADC2 is 640.5 cycles 10’d639: Only for ADC0/1 is 642.5 cycles …… 10’d807: Only for ADC0/1 is 810.5 cycles
4:0	RSQ9[4:0]	refer to RSQ0[4:0] description

20.7.10. Routine sequence register 4 (ADC_RSQ4)

Address offset: 0x34

Reset value: 0x0000 0000

This register has to be accessed by word (32-bit).

31	30	29	28	27	26	25	24	23	22	21	20	19	18	17	16
Reserved	RSMP8[9:0]										RSQ8[4:0]				
	rw										rw				

15	14	13	12	11	10	9	8	7	6	5	4	3	2	1	0
Reserved	RSMP7[9:0]										RSQ7[4:0]				
	rw										rw				

Bits	Fields	Descriptions
31	Reserved	Must be kept at reset value.
30:21	RSMP8[9:0]	Routine sequence sample time

		10’d0: For ADC0/1 is 3.5 cycles, For ADC2 is 2.5 cycles 10’d1: For ADC0/1 is 4.5 cycles, For ADC2 is 3.5 cycles 10’d2: For ADC0/1 is 5.5 cycles, For ADC2 is 4.5 cycles 10’d3: For ADC0/1 is 6.5 cycles, For ADC2 is 5.5 cycles 10’d4: For ADC0/1 is 7.5 cycles, For ADC2 is 6.5 cycles …… 10’d638: For ADC0/1 is 641.5 cycles, For ADC2 is 640.5 cycles 10’d639: Only for ADC0/1 is 642.5 cycles …… 10’d807: Only for ADC0/1 is 810.5 cycles
20:16	RSQ8[4:0]	refer to RSQ0[4:0] description
15	Reserved	Must be kept at reset value.
14:5	RSMP7[9:0]	Routine sequence sample time 10’d0: For ADC0/1 is 3.5 cycles, For ADC2 is 2.5 cycles 10’d1: For ADC0/1 is 4.5 cycles, For ADC2 is 3.5 cycles 10’d2: For ADC0/1 is 5.5 cycles, For ADC2 is 4.5 cycles 10’d3: For ADC0/1 is 6.5 cycles, For ADC2 is 5.5 cycles 10’d4: For ADC0/1 is 7.5 cycles, For ADC2 is 6.5 cycles …… 10’d638: For ADC0/1 is 641.5 cycles, For ADC2 is 640.5 cycles 10’d639: Only for ADC0/1 is 642.5 cycles …… 10’d807: Only for ADC0/1 is 810.5 cycles
4:0	RSQ7[4:0]	refer to RSQ0[4:0] description

20.7.11. Routine sequence register 5 (ADC_RSQ5)

Address offset: 0x38

Reset value: 0x0000 0000

This register has to be accessed by word (32-bit).

31	30	29	28	27	26	25	24	23	22	21	20	19	18	17	16
Reserved	RSMP6[9:0]										RSQ6[4:0]				
	rw										rw				

15	14	13	12	11	10	9	8	7	6	5	4	3	2	1	0
Reserved	RSMP5[9:0]										RSQ5[4:0]				
	rw										rw				

Bits	Fields	Descriptions
31	Reserved	Must be kept at reset value.
30:21	RSMP6[9:0]	Routine sequence sample time

		10’d0: For ADC0/1 is 3.5 cycles, For ADC2 is 2.5 cycles 10’d1: For ADC0/1 is 4.5 cycles, For ADC2 is 3.5 cycles 10’d2: For ADC0/1 is 5.5 cycles, For ADC2 is 4.5 cycles 10’d3: For ADC0/1 is 6.5 cycles, For ADC2 is 5.5 cycles 10’d4: For ADC0/1 is 7.5 cycles, For ADC2 is 6.5 cycles …… 10’d638: For ADC0/1 is 641.5 cycles, For ADC2 is 640.5 cycles 10’d639: Only for ADC0/1 is 642.5 cycles …… 10’d807: Only for ADC0/1 is 810.5 cycles
20:16	RSQ6[4:0]	refer to RSQ0[4:0] description
15	Reserved	Must be kept at reset value.
14:5	RSMP5[9:0]	Routine sequence sample time 10’d0: For ADC0/1 is 3.5 cycles, For ADC2 is 2.5 cycles 10’d1: For ADC0/1 is 4.5 cycles, For ADC2 is 3.5 cycles 10’d2: For ADC0/1 is 5.5 cycles, For ADC2 is 4.5 cycles 10’d3: For ADC0/1 is 6.5 cycles, For ADC2 is 5.5 cycles 10’d4: For ADC0/1 is 7.5 cycles, For ADC2 is 6.5 cycles …… 10’d638: For ADC0/1 is 641.5 cycles, For ADC2 is 640.5 cycles 10’d639: Only for ADC0/1 is 642.5 cycles …… 10’d807: Only for ADC0/1 is 810.5 cycles
4:0	RSQ5[4:0]	refer to RSQ0[4:0] description

20.7.12. Routine sequence register 6 (ADC_RSQ6)

Address offset: 0x3C

Reset value: 0x0000 0000

This register has to be accessed by word (32-bit).

31	30	29	28	27	26	25	24	23	22	21	20	19	18	17	16
Reserved	RSMP4[9:0]										RSQ4[4:0]				
	rw										rw				

15	14	13	12	11	10	9	8	7	6	5	4	3	2	1	0
Reserved	RSMP3[9:0]										RSQ3[4:0]				
	rw										rw				

Bits	Fields	Descriptions
31	Reserved	Must be kept at reset value.
30:21	RSMP4[9:0]	Routine sequence sample time

		10’d0: For ADC0/1 is 3.5 cycles, For ADC2 is 2.5 cycles 10’d1: For ADC0/1 is 4.5 cycles, For ADC2 is 3.5 cycles 10’d2: For ADC0/1 is 5.5 cycles, For ADC2 is 4.5 cycles 10’d3: For ADC0/1 is 6.5 cycles, For ADC2 is 5.5 cycles 10’d4: For ADC0/1 is 7.5 cycles, For ADC2 is 6.5 cycles …… 10’d638: For ADC0/1 is 641.5 cycles, For ADC2 is 640.5 cycles 10’d639: Only for ADC0/1 is 642.5 cycles …… 10’d807: Only for ADC0/1 is 810.5 cycles
20:16	RSQ4[4:0]	refer to RSQ0[4:0] description
15	Reserved	Must be kept at reset value.
14:5	RSMP3[9:0]	Routine sequence sample time 10’d0: For ADC0/1 is 3.5 cycles, For ADC2 is 2.5 cycles 10’d1: For ADC0/1 is 4.5 cycles, For ADC2 is 3.5 cycles 10’d2: For ADC0/1 is 5.5 cycles, For ADC2 is 4.5 cycles 10’d3: For ADC0/1 is 6.5 cycles, For ADC2 is 5.5 cycles 10’d4: For ADC0/1 is 7.5 cycles, For ADC2 is 6.5 cycles …… 10’d638: For ADC0/1 is 641.5 cycles, For ADC2 is 640.5 cycles 10’d639: Only for ADC0/1 is 642.5 cycles …… 10’d807: Only for ADC0/1 is 810.5 cycles
4:0	RSQ3[4:0]	refer to RSQ0[4:0] description

20.7.13. Routine sequence register 7 (ADC_RSQ7)

Address offset: 0x40

Reset value: 0x0000 0000

This register has to be accessed by word (32-bit).

31	30	29	28	27	26	25	24	23	22	21	20	19	18	17	16
Reserved	RSMP2[9:0]										RSQ2[4:0]				
	rw										rw				

15	14	13	12	11	10	9	8	7	6	5	4	3	2	1	0
Reserved	RSMP1 [9:0]										RSQ1[4:0]				
	rw										rw				

Bits	Fields	Descriptions
31	Reserved	Must be kept at reset value.
30:21	RSMP2[9:0]	Routine sequence sample time

		10’d0: For ADC0/1 is 3.5 cycles, For ADC2 is 2.5 cycles 10’d1: For ADC0/1 is 4.5 cycles, For ADC2 is 3.5 cycles 10’d2: For ADC0/1 is 5.5 cycles, For ADC2 is 4.5 cycles 10’d3: For ADC0/1 is 6.5 cycles, For ADC2 is 5.5 cycles 10’d4: For ADC0/1 is 7.5 cycles, For ADC2 is 6.5 cycles …… 10’d638: For ADC0/1 is 641.5 cycles, For ADC2 is 640.5 cycles 10’d639: Only for ADC0/1 is 642.5 cycles …… 10’d807: Only for ADC0/1 is 810.5 cycles
20:16	RSQ2[4:0]	refer to RSQ0[4:0] description
15	Reserved	Must be kept at reset value.
14:5	RSMP1[9:0]	Routine sequence sample time 10’d0: For ADC0/1 is 3.5 cycles, For ADC2 is 2.5 cycles 10’d1: For ADC0/1 is 4.5 cycles, For ADC2 is 3.5 cycles 10’d2: For ADC0/1 is 5.5 cycles, For ADC2 is 4.5 cycles 10’d3: For ADC0/1 is 6.5 cycles, For ADC2 is 5.5 cycles 10’d4: For ADC0/1 is 7.5 cycles, For ADC2 is 6.5 cycles …… 10’d638: For ADC0/1 is 641.5 cycles, For ADC2 is 640.5 cycles 10’d639: Only for ADC0/1 is 642.5 cycles …… 10’d807: Only for ADC0/1 is 810.5 cycles
4:0	RSQ1[4:0]	refer to RSQ0[4:0] description

20.7.14. Routine sequence register 8 (ADC_RSQ8)

Address offset: 0x44

Reset value: 0x0000 0000

This register has to be accessed by word (32-bit).

31	30	29	28	27	26	25	24	23	22	21	20	19	18	17	16
Reserved															

15	14	13	12	11	10	9	8	7	6	5	4	3	2	1	0
Reserved	RSMP0[9:0]										RSQ0[4:0]				
	rw										rw				

Bits	Fields	Descriptions
31:15	Reserved	Must be kept at reset value.
14:5	RSMP0[9:0]	Routine sequence sample time

		10’d0: For ADC0/1 is 3.5 cycles, For ADC2 is 2.5 cycles 10’d1: For ADC0/1 is 4.5 cycles, For ADC2 is 3.5 cycles 10’d2: For ADC0/1 is 5.5 cycles, For ADC2 is 4.5 cycles 10’d3: For ADC0/1 is 6.5 cycles, For ADC2 is 5.5 cycles 10’d4: For ADC0/1 is 7.5 cycles, For ADC2 is 6.5 cycles …… 10’d638: For ADC0/1 is 641.5 cycles, For ADC2 is 640.5 cycles 10’d639: Only for ADC0/1 is 642.5 cycles …… 10’d807: Only for ADC0/1 is 810.5 cycles
4:0	RSQ0[4:0]	The channel number (0..20) is written to these bits to select a channel as the nth conversion in the routine sequence.

20.7.15. Routine data register (ADC_RDATA)

Address offset: 0x64

Reset value: 0x0000 0000

This register has to be accessed by word (32-bit).

31	30	29	28	27	26	25	24	23	22	21	20	19	18	17	16
RDATA[31:16]															
														r	

15	14	13	12	11	10	9	8	7	6	5	4	3	2	1	0
RDATA[15:0]															
								r							

Bits	Fields	Descriptions
31:0	RDATA[31:0]	Routinel data. For ADC0/ADC1, RDATA is [31:0], for ADC2, RDATA is [15:0]. These bits contain the conversion result from routine sequence, which is read only.

20.7.16. Oversample control register (ADC_OVSAMPCTL)

Address offset: 0x80

Reset value: 0x0000 0000

This register has to be accessed by word (32-bit).

31	30	29	28	27	26	25	24	23	22	21	20	19	18	17	16
Reserved						OVSR[9:0]									
											rw				

15	14	13	12	11	10	9	8	7	6	5	4	3	2	1	0
Reserved						TOVS	OVSS[3:0]				Reserved				OVSEN
						rw	rw								rw

Bits	Fields	Descriptions
31:26	Reserved	Must be kept at reset value.
25:16	OVSR[9:0]	Oversampling ratio This bit filed defines the number of oversampling ratio. ADC0/1 is 1x~1024x. ADC2 is 1X~256X. 10'd0: 1x(no oversampling) 10'd1: 2x 10'd2: 3x …… 10'd1023:1024x **Note:** The software allows this bit to be written only when ADCON = 0 (this ensures that no conversion is in progress).
15:10	Reserved	Must be kept at reset value.
9	TOVS	Triggered Oversampling This bit is set and cleared by software. 0: All oversampled conversions for a channel are done consecutively after a trigger 1: Each conversion needs a trigger for a oversampled channel and the number of triggers is determined by the oversampling ratio(OVSR[9:0]). **Note:** The software allows this bit to be written only when ADCON = 0 (this ensures that no conversion is in progress).
8:5	OVSS[3:0]	Oversampling shift This bit is set and cleared by software. For ADC0/1, OVSS change from 0000~1101. For ADC2, OVSS change from 0000~1000. 0000: No shift 0001: Shift 1-bit 0010: Shift 2-bits 0011: Shift 3-bits 0100: Shift 4-bits 0101: Shift 5-bits 0110: Shift 6-bits 0111: Shift 7-bits 1000: Shift 8-bits 1001: Shift 9-bits 1010: Shift 10-bits 1011: Shift 11-bits Other codes reserved **Note:** The software allows this bit to be written only when ADCON = 0 (this ensures that no conversion is in progress).
4:1	Reserved	Must be kept at reset value.
0	OVSEN	Oversampler Enable

This bit is set and cleared by software.

0: Oversampler disabled

1: Oversampler enabled

Note: The software allows this bit to be written only when ADCON = 0 (this ensures that no conversion is in progress).

20.7.17. Watchdog 1 Channel Selection Register (ADC_WD1SR)

Address offset: 0xA0

Reset value: 0x00000000

This register has to be accessed by word (32-bit).

31	30	29	28	27	26	25	24	23	22	21	20	19	18	17	16
Reserved											AWD1CS[20:16]				
											rw				

15	14	13	12	11	10	9	8	7	6	5	4	3	2	1	0
AWD1CS[15:0]															
rw															

Bits	Fields	Descriptions
31:21	Reserved	Must be kept at reset value.
20:0	AWD1CS[20:0]	Analog watchdog 1 channel selection These bits are set and cleared by software. They enable and select the input channels to be guarded by the analog watchdog 1. AWD1CS[n] = 0: ADC analog input channel n is not monitored by analog watchdog 1. AWD1CS[n] = 1: ADC analog input channel n is monitored by analog watchdog 1. When AWD1CS[20:0] = 000..0, the analog Watchdog 1 is disabled **Note:** 1) The channels selected by AWD1CS must be also selected into the ADC_RSQn or ADC_ISQ registers. 2) Software is allowed to write these bits only when the ADC is disabled (ADCON =0).

20.7.18. Watchdog 2 Channel Selection Register (ADC_WD2SR)

Address offset: 0xA4

Reset value: 0x00000000

This register has to be accessed by word (32-bit).

31	30	29	28	27	26	25	24	23	22	21	20	19	18	17	16
Reserved											AWD2CS[20:16]				
											rw				

15	14	13	12	11	10	9	8	7	6	5	4	3	2	1	0
AWD2CS[15:0]															
rw															

Bits	Fields	Descriptions
31:21	Reserved	Must be kept at reset value.
20:0	AWD2CS[20:0]	Analog watchdog 2 channel selection These bits are set and cleared by software. They enable and select the input channels to be guarded by the analog watchdog 2. AWD2CS[n] = 0: ADC analog input channel n is not monitored by analog watchdog 2. AWD2CS[n] = 1: ADC analog input channel n is monitored by Analog watchdog 2. When AWD2CS[20:0] = 000..0, the analog Watchdog 2 is disabled **Note:** 1) The channels selected by AWD2CS must be also selected into the ADC_RSQn or ADC_ISQ registers. 2) Software is allowed to write these bits only when the ADC is disabled (ADCON =0).

20.7.19. Watchdog high threshold register1 (ADC_WDHT1)

Address offset: 0xA8

Reset value: 0x00FF FFFF

This register has to be accessed by word (32-bit).

31	30	29	28	27	26	25	24	23	22	21	20	19	18	17	16
Reserved								WDHT1[23:16]							
								rw							

15	14	13	12	11	10	9	8	7	6	5	4	3	2	1	0
WDHT1[15:0]															
rw															

Bits	Fields	Descriptions
31:24	Reserved	Must be kept at reset value.
23:0	WDHT1[23:0]	High threshold for analog watchdog 1. For ADC0/1 are WDHT1[23:0], for ADC2 is WDHT1[7:0]. These bits define the high threshold for the analog watchdog 1. **Note:** Software is allowed to write these bits only when the ADC is disabled (ADCON =0).

20.7.20. Watchdog low threshold register1 (ADC_WDLT1)

Address offset: 0xAC

Reset value: 0x0000 0000

This register has to be accessed by word (32-bit).

31	30	29	28	27	26	25	24	23	22	21	20	19	18	17	16
Reserved								WDLT1[23:16]							
												rw			

15	14	13	12	11	10	9	8	7	6	5	4	3	2	1	0
WDLT1[15:0]															
								rw							

Bits	Fields	Descriptions
31:24	Reserved	Must be kept at reset value.
23:0	WDLT1[23:0]	Low threshold for analog watchdog 1. For ADC0/1 are WDLT1[23:0], for ADC2 is WDLT1[7:0]. These bits define the high threshold for the analog watchdog 1. **Note:** Software is allowed to write these bits only when the ADC is disabled (ADCON =0).

20.7.21. Watchdog high threshold register2 (ADC_WDHT2)

Address offset: 0xB0

Reset value: 0x00FF FFFF

This register has to be accessed by word (32-bit).

31	30	29	28	27	26	25	24	23	22	21	20	19	18	17	16
Reserved								WDHT2[23:16]							
												rw			

15	14	13	12	11	10	9	8	7	6	5	4	3	2	1	0
WDHT2[15:0]															
								rw							

Bits	Fields	Descriptions
31:24	Reserved	Must be kept at reset value.
23:0	WDHT2[23:0]	High threshold for analog watchdog 2. For ADC0/1 are WDHT2[23:0], for ADC2 is WDHT2[7:0]. These bits define the high threshold for the analog watchdog 2. **Note:** Software is allowed to write these bits only when the ADC is disabled (ADCON =0).

20.7.22. Watchdog low threshold register2 (ADC_WDLT2)

Address offset: 0xB4

Reset value: 0x0000 0000

This register has to be accessed by word (32-bit).

31	30	29	28	27	26	25	24	23	22	21	20	19	18	17	16
Reserved								WDLT2[23:16]							
											rw				

15	14	13	12	11	10	9	8	7	6	5	4	3	2	1	0
WDLT2[15:0]															
rw															

Bits	Fields	Descriptions
31:24	Reserved	Must be kept at reset value.
23:0	WDLT2[23:0]	Low threshold for analog watchdog 2. For ADC0/1 are WDLT2[23:0], for ADC2 is WDLT2[7:0]. These bits define the high threshold for the analog watchdog 2. **Note:** Software is allowed to write these bits only when the ADC is disabled (ADCON =0).

20.7.23. Differential mode control register (ADC_DIFCTL)

Address offset: 0XB8

Reset value: 0x0000 0000

This register has to be accessed by word (32-bit).

31	30	29	28	27	26	25	24	23	22	21	20	19	18	17	16
Reserved										DIFCTL[21:16]					
												rw			

15	14	13	12	11	10	9	8	7	6	5	4	3	2	1	0
DIFCTL[15:0]															
rw															

Bits	Fields	Descriptions
31:22	Reserved	Must be kept at reset value.
21:0	DIFCTL[21:0]	Differential mode for channel 21..0. These bits are configured to select whether a channel is in single-ended or differential mode. DIFCTL[i] = 0: ADC analog input channel-i is configured in single-ended mode DIFCTL[i] = 1: ADC analog input channel-i is configured in differential mode **Note:** Software is allowed to write these bits only when the ADC is disabled (ADCON =0).

20.7.24. Summary status register (ADC_SSTAT)

Address offset: 0x300 (for ADC0 base address)

Reset value: 0x0000 0000

This register is read only and provides a summary of the three ADCs. This register is not available in ADC1 and ADC2.

This register has to be accessed by word (32-bit).

31	30	29	28	27	26	25	24	23	22	21	20	19	18	17	16
Reserved								ADC2_ROVF	ADC2_STRC	Reserved		ADC2_EOC	ADC2_WDE2	ADC2_WDE1	ADC2_WDE0
								r	r			r	r	r	r

15	14	13	12	11	10	9	8	7	6	5	4	3	2	1	0
ADC1_ROVF	ADC1_STRC	Reserved		ADC1_EOC	ADC1_WDE2	ADC1_WDE1	ADC1_WDE0	ADC0_ROVF	ADC0_STRC	Reserved		ADC0_EOC	ADC0_WDE2	ADC0_WDE1	ADC0_WDE0
r	r			r	r	r	r	r	r			r	r	r	r

Bits	Fields	Descriptions
31:24	Reserved	Must be kept at reset value.
23	ADC2_ROVF	This bit is the mirror image of the ROVF bit of ADC2
22	ADC2_STRC	This bit is the mirror image of the STRC bit of ADC2
21:20	Reserved	Must be kept at reset value.
19	ADC2_EOC	This bit is the mirror image of the EOC bit of ADC2
18	ADC2_WDE2	This bit is the mirror image of the WDE2 bit of ADC2
17	ADC2_WDE1	This bit is the mirror image of the WDE1 bit of ADC2
16	ADC2_WDE0	This bit is the mirror image of the WDE0 bit of ADC2
15	ADC1_ROVF	This bit is the mirror image of the ROVF bit of ADC1
14	ADC1_STRC	This bit is the mirror image of the STRC bit of ADC1
13:12	Reserved	Must be kept at reset value.
11	ADC1_EOC	This bit is the mirror image of the EOC bit of ADC1
10	ADC1_WDE2	This bit is the mirror image of the WDE2 bit of ADC1
9	ADC1_WDE1	This bit is the mirror image of the WDE1 bit of ADC1
8	ADC1_WDE0	This bit is the mirror image of the WDE0 bit of ADC1
7	ADC0_ROVF	This bit is the mirror image of the ROVF bit of ADC0
6	ADC0_STRC	This bit is the mirror image of the STRC bit of ADC0
5:4	Reserved	Must be kept at reset value.
3	ADC0_EOC	This bit is the mirror image of the EOC bit of ADC0

2	ADC0_WDE2	This bit is the mirror image of the WDE2 bit of ADC0
1	ADC0_WDE1	This bit is the mirror image of the WDE1 bit of ADC0
0	ADC0_WDE0	This bit is the mirror image of the WDE0 bit of ADC0

20.7.25. Sync control register (ADC_SYNCCTL)

Address offset: 0x304 (for ADC0 / ADC2 base address)
Reset value: 0x0000 0000

This register is not available in ADC1.

This register has to be accessed by word (32-bit).

31	30	29	28	27	26	25	24	23	22	21	20	19	18	17	16
Reserved								ADCCK[3:0]				ADCSCK[3:0]			
								rw				rw			

15	14	13	12	11	10	9	8	7	6	5	4	3	2	1	0
SYNCDMA[1:0]		SYNCDDM	Reserved	SYNCDLY[3:0]				Reserved				SYNCM[3:0]			
rw		rw		rw								rw			

Bits	Fields	Descriptions
31:24	Reserved	Must be kept at reset value.
23:20	ADCCK[3:0]	ADC clock prescaler. ADC Prescaler These bits are set and cleared by by software to select the frequency of the ADC clock. All ADCs are common. 4'b0000: ADC clock div1 4'b0001: ADC clock div2 4'b0010: ADC clock div4 4'b0011: ADC clock div6 4'b0100: ADC clock div8 4'b0101: ADC clock div10 4'b0110: ADC clock div12 4'b0111: ADC clock div16 4'b1000: ADC clock div32 4'b1001: ADC clock div64 4'b1010: ADC clock div128 4'b1011: ADC clock div256 All other values are reserved.
19:16	ADCSCK[3:0]	ADC sync clock mode These bits are set and cleared by by software to define the ADC sync clock mode. All ADCs are common. 4'b0000: CLK_ADC(async clock mode)

		4'b1000:HCLK div2(sync clock mode) 4'b1001:HCLK div4(sync clock mode) 4'b1010:HCLK div6(sync clock mode) 4'b1011:HCLK div8(sync clock mode) 4'b1100:HCLK div10(sync clock mode) 4'b1101:HCLK div12(sync clock mode) 4'b1110:HCLK div14(sync clock mode) 4'b1111:HCLK div16(sync clock mode) All other values are reserved.
15:14	SYNCDMA[1:0]	ADC sync DMA mode selection 00: ADC sync DMA disabled 01: ADC sync DMA mode 0 10: ADC sync DMA mode 1 11: reserved
13	SYNCDDM	ADC sync DMA disable mode This bit configures the DMA disable mode for ADC sync mode 0: The DMA engine is disabled after the end of transfer signal from DMA controller is detected. 1: When SYNCDMA is not equal to 2'b00, the DMA engine issues requests according to the SYNCDMA bits.
12	Reserved	Must be kept at reset value.
11:8	SYNCDLY[3:0]	ADC sync delay These bits are used to configure the delay between 2 sampling phases in ADC sync modes to (5+SYNCDLY) ADC clock cycles.
7:4	Reserved	Must be kept at reset value.
3:0	SYNCM[3:0]	ADC sync mode When ADC sync mode is enabled these bits should be set to 0000 firstly before change to another value. 0000: ADC sync mode disabled. All the ADCs work independently. 0110: ADC0 and ADC1 work in routine parallel mode. 0111: ADC0 and ADC1 work in follow-up mode. All other values are reserved.

20.7.26. Sync routine data register0 (ADC_SYNCDATA0)

Address offset: 0x308 (for ADC0 base address)
Reset value: 0x0000 0000

This register is not available in ADC1 and ADC2.

This register has to be accessed by word (32-bit).

31	30	29	28	27	26	25	24	23	22	21	20	19	18	17	16
SYNCDATA1[15:0]															
r															

15	14	13	12	11	10	9	8	7	6	5	4	3	2	1	0
SYNCDATA0[15:0]															
r															

Bits	Fields	Descriptions
31:16	SYNCDATA1[15:0]	Routine data1(slave adc routine data) in ADC sync mode. SYNCDMA[1:0] must be 2’b10.
15:0	SYNCDATA0[15:0]	Routine data0 (master adc routine data) in ADC sync mode. SYNCDMA[1:0] must be 2’b10,

20.7.27. Sync routine data register1 (ADC_SYNCDATA1)

Address offset: 0x30C (for ADC0 base address)
Reset value: 0x0000 0000

This register is not available in ADC1 and ADC2.

This register has to be accessed by word (32-bit).

31	30	29	28	27	26	25	24	23	22	21	20	19	18	17	16
SYNCDATA [31:16]															
r															

15	14	13	12	11	10	9	8	7	6	5	4	3	2	1	0
SYNCDATA [15:0]															
r															

Bits	Fields	Descriptions
31:0	SYNCDATA[31:0]	SYNCDMA[1:0]=2’b01, which is selected from the routine data (master / slave) of the ADCs in turn.

21. Digital-to-analog converter (DAC)

21.1. Overview

The Digital-to-analog converter converts 12-bit digital data to a voltage on the external pins. The digital data can be configured to 8-bit or 12-bit mode, left-aligned or right-aligned mode. DMA can be used to update the digital data on external triggers.

The output voltage can be optionally buffered for higher drive capability, and DAC output buffer can be calibrated to improve output accuracy.

The sample and keep mode can reduce the power consumption of DAC.

The DAC channels can work independently or concurrently.

21.2. Characteristics

The main features of DAC are as follows:

- 8-bit or 12-bit resolution.
- Left or right data alignment.
- DMA capability for each channel and underrun function.
- Conversion update synchronously.
- Conversion triggered by external triggers.
- Configurable internal buffer.
- Extern voltage reference, V_{REFP}.
- Output buffer calibration.
- Using sample and keep mode to reduce the power consumption.
- Noise wave generation (LFSR noise mode and Triangle noise mode).
- Two DAC channels in concurrent mode.

Figure 21-1. DAC block diagram and *Table 21-1. DAC I/O description* show the block diagram of DAC and the pin description of DAC, respectively.

Figure 21-1. DAC block diagram

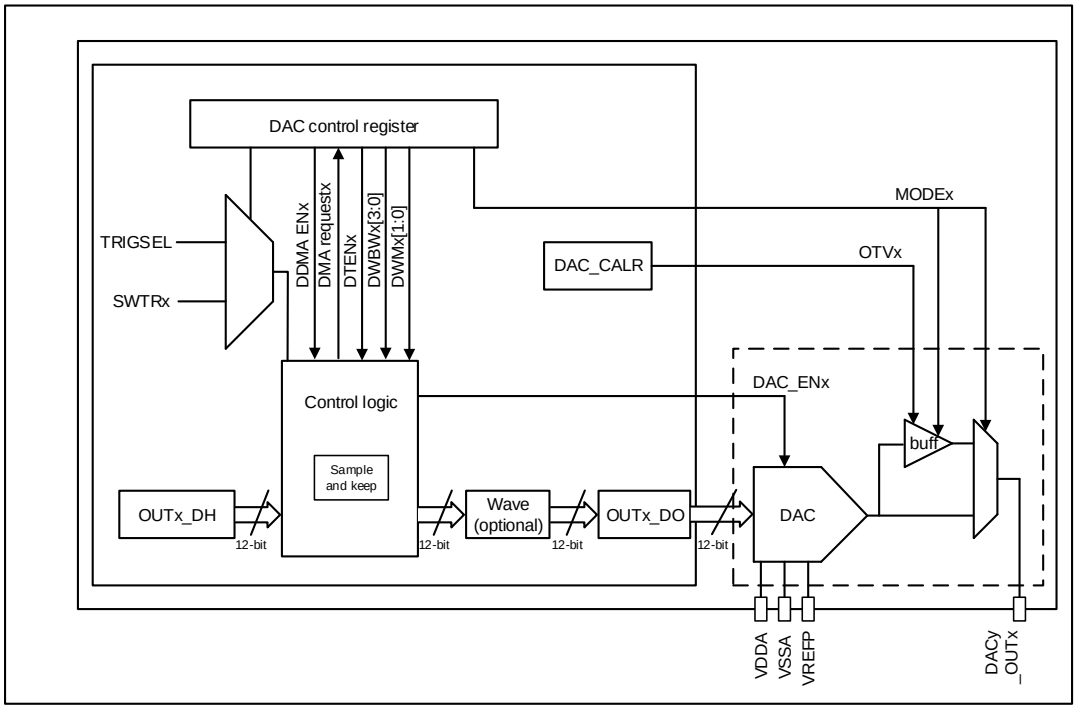

Table 21-1. DAC I/O description

Name	Description	Signal type
V_{DDA}	Analog power supply	Input, analog supply
V_{SSA}	Ground for analog power supply	Input, analog supply ground
V_{REFP}	Positive reference voltage of DAC	Input, analog positive reference
DACy_OUTx	DAC analog output	Analog output signal

The below table details the triggers and outputs of the DAC.

Table 21-2. DAC triggers and outputs summary

	DAC0	
Channel	**Channel0**	**Channel1**
DAC outputs connected to I / Os	PA4	PA5
DAC output buffer	●	●
DAC trigger signals from TRIGSEL	●	
DAC software trigger	●	

Note: The GPIO pins should be configured to analog mode before enable the DAC module.

21.3. Function description

21.3.1. DAC enable

The DAC can be turned on by setting the DENx bit in the DAC_CTL0 register. A t_{WAKEUP} time is needed to startup the analog DAC submodule.

21.3.2. DAC output buffer

For reducing output impedance and driving external loads without an external operational amplifier, an output buffer is integrated inside each DAC module.

The output buffer, which is turned on by default to reduce the output impedance and improve the driving capability, can be turned off by setting the DBOFFx bit in the DAC_CTL0 register.

21.3.3. DAC data configuration

The 12-bit DAC holding data (OUTx_DH) can be configured by writing any one of the OUTx_R12DH, OUTx_L12DH and OUTx_R8DH registers. When the data is loaded by OUTx_R8DH register, only the MSB 8 bits are configurable, the LSB 4 bits are forced to 4′b0000.

21.3.4. DAC trigger

The DAC conversion can be triggered by software or rising edge of external trigger source. The DAC external trigger is enabled by setting the DTENx bits in the DAC_CTL0 register. The DAC external triggers are selected by the DTSELx bits in the DAC_CTL0 register, which is shown as ***Table 21-3. Triggers of DAC***.

Table 21-3. Triggers of DAC

DTSELx[1:0]	Trigger Source	Trigger Type
2b’00	TRIGSEL	Hardware trigger
2b’01	SWTR	Software trigger
2b’10	Reserved	Reserved
2b’11		

The external trigger is generated from the TRIGSEL, while the software trigger can be generated by setting the SWTRx bits in the DAC_SWT register.

21.3.5. DAC conversion

If the external trigger is enabled by setting the DTENx bit in DAC_CTL0 register, the DAC holding data is transferred to the DAC output data (OUTx_DO) register when the selected trigger event happened. When the external trigger is disabled, the transfer is performed

automatically.

When the DAC holding data (OUTx_DH) is loaded into the OUTx_DO register, after the time $t_{SETTLING}$ which is determined by the analog output load and the power supply voltage, the analog output is valid.

21.3.6. DAC noise wave

There are two methods of adding noise wave to the DAC output data: LFSR noise wave mode and Triangle wave mode. The noise wave mode can be selected by the DWMx bits in the DAC_CTL0 register. The amplitude of the noise can be configured by the DAC noise wave bit width (DWBWx) bits in the DAC_CTL0 register.

LFSR noise wave mode: there is a Linear Feedback Shift Register (LFSR) in the DAC control logic, it controls the LFSR noise signal which is added to the OUTx_DH value, and then the result is stored into the OUTx_DO register. When the configured DAC noise wave bit width is less than 12, the noise signal equals to the LSB DWBWx bits of the LFSR register, while the MSB bits are masked.

Figure 21-2. DAC LFSR algorithm

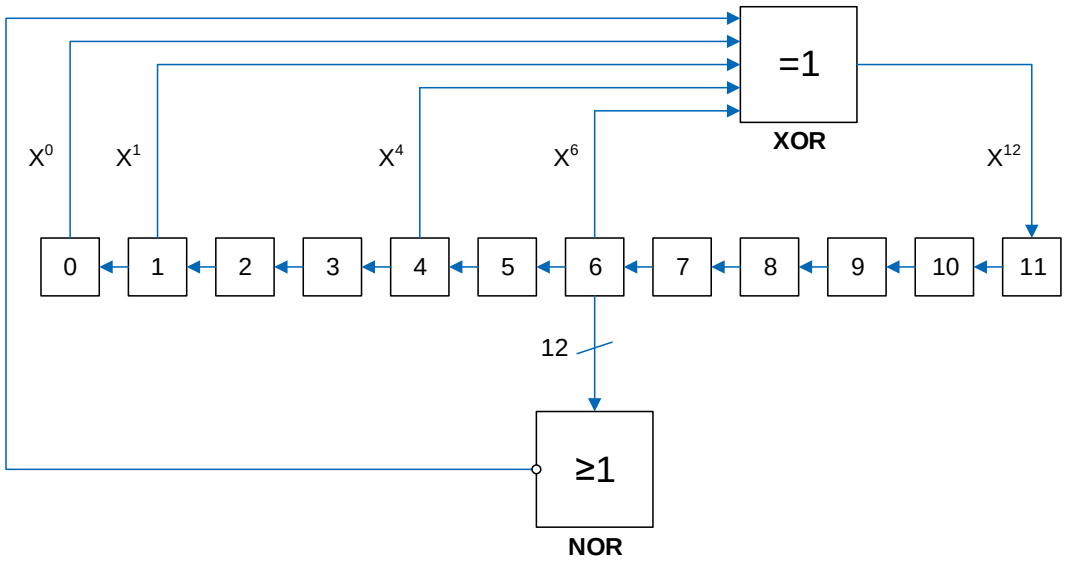

Triangle noise mode: a triangle signal is added to the OUTx_DH value, and then the result is stored into the OUTx_DO register. The minimum value of the triangle signal is 0, while the maximum value of the triangle signal is (2 << DWBWx) - 1.

Figure 21-3. DAC triangle noise wave

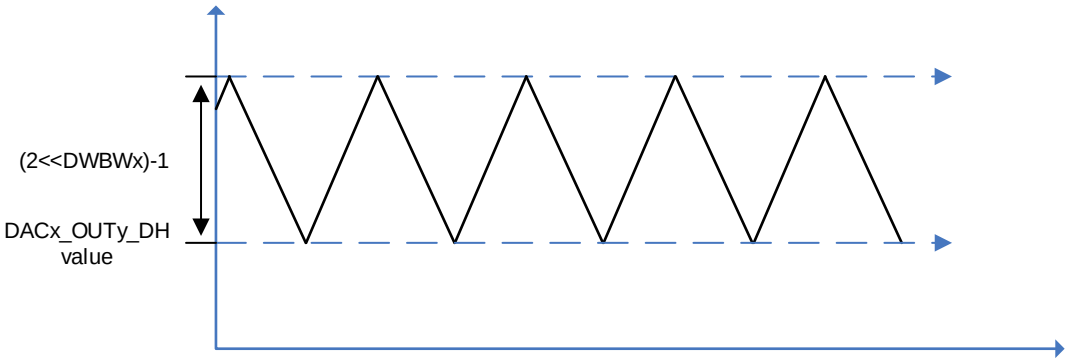

21.3.7. DAC output voltage

The following equation determines the analog output voltage on the DAC pin.

$$V_{DAC_OUT}=V_{REFP}*OUTx_DO/4096 \quad (4\text{-}1)$$

The digital input is linearly converted to an analog output voltage, its range is 0 to V_{REFP}

21.3.8. DMA request

When the external trigger is enabled, the DMA request is enabled by setting the DDMAENx bit of the DAC_CTL0 register. A DMA request will be generated when an external hardware trigger (not a software trigger) occurs.

If the second external trigger arrives before confirming the previous request, the new request will not be serviced, and an underrun error event occurs. The DDUDRx bit in the DAC_STAT0 register is set, an interrupt will be generated if the DDUDRIEx bit in the DAC_CTL0 register is set. The DMA request will be stalled until the DDUDRx bit is cleared.

21.3.9. DAC concurrent conversion

When the two output channels work at the same time, for maximum bus bandwidth utilization in specific applications, two output channels can be configured in concurrent mode. In concurrent mode, the OUTx_DH and OUTx_DO value will be updated at the same time.

There are three concurrent registers that can be used to load the OUTx_DH value: DACC_R8DH, DACC_R12DH and DACC_L12DH. User just need to access a unique register to realize driving two DAC channels at the same time.

When external trigger is enabled, please ensure both DTENx bits be set, DTSEL0/DTSEL1 bits be same to guarantee the simultaneous trigger.

When DMA is enabled, please ensure any DDMAENx bit in one DAC be set.

The noise mode and noise bit width can be configured either the same or different, depending

on the application scenario.

21.3.10. DAC output buffer calibration

The output voltage may be offset when DAC use buffer, so it is necessary to compensate output voltage.

The DAC calibration transfer function is:

$$V_{out}=(D/2^{N-1})*G*V_{REFP}+V_{of} \quad (21\text{-}2)$$

Where N is the significant digit of the DAC, D is the digital input of the DAC, and G is the gain, V_{REFP} is the positive reference voltage of the DAC, V_{of} is the offset voltage. The G is 1 and V_{of} is 0 for an ideal DAC.

Calibration will be effective when buffer is enable. During the calibration:

- Buffer disconnect from external pin and on chip peripherals, and enter tri-stated.
- The buffer will be used as a comparator to detect the intermediate code value 0x800,and compare it with $V_{REFP}/2$ through the internal bridge. The CALFx bit in DAC_STAT0 register will be changed to 0 or 1 according to the comparison result.

Two calibration techniques are available:

- Factory calibration(always enable)
  - DAC buffer offset is adjusted at the factory. And the default value of OTVx[4:0] bits in DAC_CALR register is loaded when DAC reset.
- User calibration
  - When the operating conditions are different from the nominal factory calibration conditions, especially when the VDDA, V_{REFP} or temperature change, the user can calibrate at any point in the application process through the software.

The contents of OTVx[4:0] bits can be calculated in a faster way by using successive approximation or dichotomy techniques. The following process is successive approximation method:

- Writing 0 to DENx bit in DAC_CTL0 register to disable DAC output.
- Writing 1 to CALENx bit in DAC_CTL0 register to enable DAC calibration.
- process of calibration algorithm
  - Writing a code (staring by 0x00000b) into OTVx[4:0].
  - Waiting for T_{cal} delay.
  - Checking the flag CALFx in DAC_STAT0 register.
  - If the CALFx set to 1, it proves that the correct calibration value has been found; otherwise, add 1 to the code until the correct calibration value is found.

Note: CALENx should write back to 0 after the calibration process, and then wirte DENx to 1 to use DAC at normal mode. It is forbidden to set DENx and CALENx to 1 at the same time.

21.3.11. DAC modes

DAC can be set to normal mode or sample and keep mode. The DAC out can be connected to external pin or on chip peripherals.

Normal mode

When the MODEx[2] bit in the DAC_MDCR register is 0, DAC is in normal mode.

Sample and keep mode

When the MODEx[2] bit in the DAC_MDCR register is 1, DAC is in sample and keep mode, the DAC core converts the data after triggering the conversion, and then keeps the converted voltage on the capacitor in sample and keep mode. The DAC core is closed between the two samples. Without converting, the DAC output is tri-stated, so the overall power consumption can be reduced. In this mode, LXTAL and IRC32K drive all the corresponding logic and the DAC core and registers, so that DAC can be used in Deep-sleep mode.

The operation of sample and keep mode can be divided into three stages:

Sample stage

The sample and keep element is charged to the required voltage. The charging time is determined by the capacitance value. The sampling time is configured by the TSAMPx[9:0] bits in DAC_SKSTRx register. The BWTx bit in DAC_SATA0 is set to 1 when writing the TSAMPx[9:0] bits which indicates the synchronization between AHB clock and IRC32K/LXTAL and the TSAMPx[9:0] bits can be changed by software during DAC out operation.

Keep stage

At this stage, the DAC core is closed due to reduced power consumption. The keep time is configured by the TKEEPx[9:0] bits in DAC_SKKTR register. DAC out is tri-stated.

Refresh stage

In this stage, DAC core is turn on again to charge the declined voltage to target value.The refresh time is determined by the TREFx[7: 0] bits in DAC_SKRTR register.

When a new OUTx_DH is updated(a trigger when DTENx=1 or update when DTENx = 0), the operation stage will go to sample stage and the DAC core converts the new data to the required voltage. In sample and keep mode, it should take more than 3 cycles of IRC32K between two continuous data update operation for synchronous.

Time calculation

The calculation of the time for the three stages above are based on LXTAL/IRC32K clock periods. To configure enough sample and refresh time, refer to the following formula:

Table 21-4. Formula of sample and refresh time

Buffer State	t_{sample}	$t_{refresh}$	t_{keep}
ON	$t_{wakeup} + R_{BON}*C_{SK}*\ln(2^{N+1})$	$t_{wakeup} + R_{BON}*C_{SK}*\ln(2*N_{LSB})$	$(V_{REFP}/2^N)*N_{LSB}*C_{SK}/I_{leak}$
OFF	$t_{wakeup} + R_{BOFF}*C_{SK}*\ln(2^{N+1})$	$t_{wakeup} + R_{BOFF}*C_{SK}*\ln(2*N_{LSB})$	$(V_{REFP}/2^N)*N_{LSB}*C_{SK}/I_{leak}$

Note:

(1) In the above formula, the t_{wakeup} is wakeup time from off state to the DAC output reaches final value, the charge time is calculated with 1/2 LSB error accuracy to desired output voltage.

(2) R_{BON}/R_{BOFF} is the output impedence when buffer on or off, C_{SK} is the sample and keep capacitor (internal or external). When MODEx[2:0] bits in DAC_MDCR register are 3'b111, the internal capacitor is used to keep the DAC output voltage for on-chip peripherals.

(3) The keep time depends on the tolerance voltage drop during keep stage due to the capacitor discharging with the output leakage current. The number of LSBs N_{LSB} represents the voltage drop, and I_{leak} is the leakage current.

(4) The value of R_{BON}, R_{BOFF}, C_{SK} and t_{wakeup} please refer to device datasheet.

The sample and keep mode stage diagram is shown as below.

Figure 21-4. DAC sample and keep

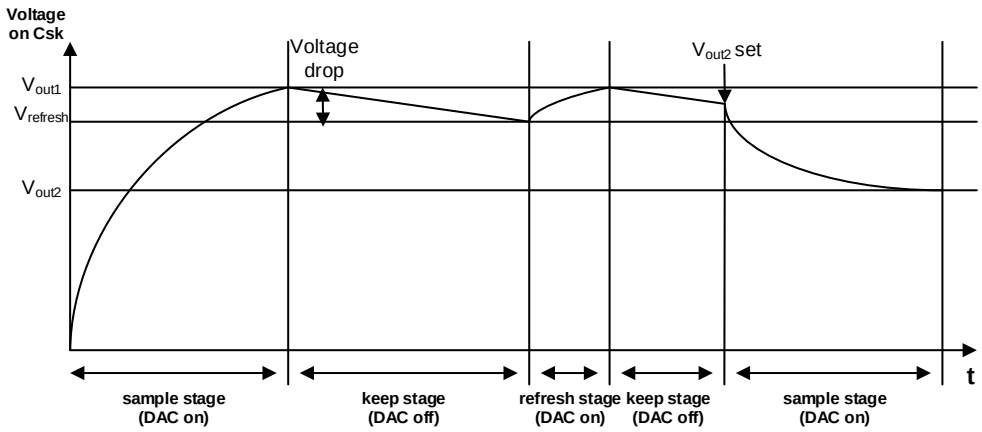

21.3.12. DAC low-power modes

Sleep mode

In Sleep mode, DAC can work normally, and can be used with DMA.

Deep-sleep mode

In Deep-sleep mode, if sample and keep mode is enabled before entering Deep-sleep mode, DAC can still hold the static output, otherwise DAC stops working.

Standby mode

In Standby mode, DAC stops working. When exting from the standby mode, the DAC need to be reinitialized to work again.

21.4. DAC register

DAC0 base address: 0x4000 7400

21.4.1. DACx control register 0 (DAC_CTL0)

Address offset: 0x00

Reset value: 0x0000 0000

This register has to be accessed by word (32-bit).

31	30	29	28	27	26	25	24	23	22	21	20	19	18	17	16
Reserved	CALEN1	DDUDRIE1	DDMAEN1	DWBW1[3:0]				DWM1[1:0]		Reserved		DTSEL1[1:0]		DTEN1	DEN1
	rw	rw	rw	rw				rw				rw		rw	rw

15	14	13	12	11	10	9	8	7	6	5	4	3	2	1	0
Reserved	CALEN0	DDUDRIE0	DDMAEN0	DWBW0[3:0]				DWM0[1:0]		Reserved		DTSEL0[1:0]		DTEN0	DEN0
	rw	rw	rw	rw				rw				rw		rw	rw

Bits	Fields	Descriptions
31	Reserved	Must be kept at reset value.
30	CALEN1	DACx_OUT1 calibration enable 0: DACx_OUT1 calibration mode disabled 1: DACx_OUT1 calibration mode enabled CALEN1 can be written to 1 only when DEN1 is 0
29	DDUDRIE1	DACx_OUT1 DMA underrun interrupt enable 0: DACx_OUT1 DMA underrun interrupt disabled 1: DACx_OUT1 DMA underrun interrupt enabled
28	DDMAEN1	DACx_OUT1 DMA enable 0: DACx_OUT1 DMA mode disabled 1: DACx_OUT1 DMA mode enabled
27:24	DWBW1[3:0]	DACx_OUT1 noise wave bit width These bits specify bit width of the noise wave signal of DACx_OUT1. These bits indicate that unmask LFSR bit [n-1, 0] in LFSR noise mode or the amplitude of the triangle is ((2 << (n-1)) - 1) in triangle noise mode, where n is the bit width of wave. 0000: The bit width of the wave signal is 1 0001: The bit width of the wave signal is 2 0010: The bit width of the wave signal is 3 0011: The bit width of the wave signal is 4 0100: The bit width of the wave signal is 5 0101: The bit width of the wave signal is 6

		0110: The bit width of the wave signal is 7 0111: The bit width of the wave signal is 8 1000: The bit width of the wave signal is 9 1001: The bit width of the wave signal is 10 1010: The bit width of the wave signal is 11 ≥1011: The bit width of the wave signal is 12
23:22	DWM1[1:0]	DACx_OUT1 noise wave mode These bits specify the mode selection of the noise wave signal of DACx_OUT1 when external trigger of DACx_OUT1 is enabled (DTEN1=1). 00: wave disabled 01: LFSR noise mode 1x: Triangle noise mode
21:20	Reserved	Must be kept at reset value.
19:18	DTSEL1[1:0]	DACx_OUT1 trigger selection These bits are only used if bit DTEN = 1 and select the external event used to trigger DAC. 00: EXTRIG(external trigger from TRIGSEL). 01: Software trigger. All other values: reserved.
17	DTEN1	DACx_OUT1 trigger enable 0: DACx_OUT1 trigger disabled 1: DACx_OUT1 trigger enabled
16	DEN1	DACx_OUT1 enable 0: DACx_OUT1 disabled 1: DACx_OUT1 enabled
15	Reserved	Must be kept at reset value.
14	CALEN0	DACx_OUT0 calibration enable 0: DACx_OUT0 calibration mode disabled 1: DACx_OUT0 calibration mode enabled CALEN0 can be written to 1 only when DEN0 is 0.
13	DDUDRIE0	DACx_OUT0 DMA underrun interrupt enable 0: DACx_OUT0 DMA underrun interrupt disabled 1: DACx_OUT0 DMA underrun interrupt enabled
12	DDMAEN0	DACx_OUT0 DMA enable 0: DACx_OUT0 DMA mode disabled 1: DACx_OUT0 DMA mode enabled
11:8	DWBW0[3:0]	DACx_OUT0 noise wave bit width These bits specify bit width of the noise wave signal of DACx_OUT0. These bits indicate that unmask LFSR bit [n-1, 0] in LFSR noise mode or the amplitude of the

		triangle is ((2<<(n-1))-1) in triangle noise mode, where n is the bit width of wave. 0000: The bit width of the wave signal is 1 0001: The bit width of the wave signal is 2 0010: The bit width of the wave signal is 3 0011: The bit width of the wave signal is 4 0100: The bit width of the wave signal is 5 0101: The bit width of the wave signal is 6 0110: The bit width of the wave signal is 7 0111: The bit width of the wave signal is 8 1000: The bit width of the wave signal is 9 1001: The bit width of the wave signal is 10 1010: The bit width of the wave signal is 11 ≥1011: The bit width of the wave signal is 12
7:6	DWM0[1:0]	DACx_OUT0 noise wave mode These bits specify the mode selection of the noise wave signal of DACx_OUT0 when external trigger of DACx_OUT0 is enabled (DTEN0=1). 00: Wave disabled 01: LFSR noise mode 1x: Triangle noise mode
5:4	Reserved	Must be kept at reset value.
3:2	DTSEL0[1:0]	DACx_OUT0 trigger selection These bits are only used if bit DTEN = 1 and select the external event used to trigger DAC. 00: EXTRIG(external trigger from TRIGSEL). 01: Software trigger. All other values: reserved.
1	DTEN0	DACx_OUT0 trigger enable 0: DACx_OUT0 trigger disabled 1: DACx_OUT0 trigger enabled
0	DEN0	DACx_OUT0 enable 0: DACx_OUT0 disabled 1: DACx_OUT0 enabled

21.4.2. DACx software trigger register (DAC_SWT)

Address offset: 0x04

Reset value: 0x0000 0000

This register has to be accessed by word(32-bit).

31	30	29	28	27	26	25	24	23	22	21	20	19	18	17	16
Reserved															

15	14	13	12	11	10	9	8	7	6	5	4	3	2	1	0
Reserved														SWTR1	SWTR0
														w	w

Bits	Fields	Descriptions
31:2	Reserved	Must be kept at reset value.
1	SWTR1	DACx_OUT1 software trigger, cleared by hardware. 0: Software trigger disabled 1: Software trigger enabled
0	SWTR0	DACx_OUT0 software trigger, cleared by hardware. 0: Software trigger disabled 1: Software trigger enabled

21.4.3. DACx_OUT0 12-bit right-aligned data holding register (DAC_OUT0_R12DH)

Address offset: 0x08

Reset value: 0x0000 0000

This register has to be accessed by word(32-bit).

31	30	29	28	27	26	25	24	23	22	21	20	19	18	17	16
Reserved															

15	14	13	12	11	10	9	8	7	6	5	4	3	2	1	0
Reserved				OUT0_DH[11:0]											
				rw											

Bits	Fields	Descriptions
31:12	Reserved	Must be kept at reset value.
11:0	OUT0_DH[11:0]	DACx_OUT0 12-bit right-aligned data. These bits specify the data that is to be converted by DACx_OUT0.

21.4.4. DACx_OUT0 12-bit left-aligned data holding register (DAC_OUT0_L12DH)

Address offset: 0x0C

Reset value: 0x0000 0000

This register has to be accessed by word(32-bit).

31	30	29	28	27	26	25	24	23	22	21	20	19	18	17	16

Reserved

15	14	13	12	11	10	9	8	7	6	5	4	3	2	1	0
OUT0_DH[11:0]												Reserved			
rw															

Bits	Fields	Descriptions
31:16	Reserved	Must be kept at reset value.
15:4	OUT0_DH[11:0]	DACx_OUT0 12-bit left-aligned data. These bits specify the data that is to be converted by DACx_OUT0.
3:0	Reserved	Must be kept at reset value.

21.4.5. DACx_OUT0 8-bit right-aligned data holding register (DAC_OUT0_R8DH)

Address offset: 0x10

Reset value: 0x0000 0000

This register has to be accessed by word(32-bit).

31	30	29	28	27	26	25	24	23	22	21	20	19	18	17	16
Reserved															

15	14	13	12	11	10	9	8	7	6	5	4	3	2	1	0
Reserved								OUT0_DH[7:0]							
								rw							

Bits	Fields	Descriptions
31:8	Reserved	Must be kept at reset value.
7:0	OUT0_DH[7:0]	DACx_OUT0 8-bit right-aligned data. These bits specify the MSB 8-bit of the data that is to be converted by DACx_OUT0.

21.4.6. DACx_OUT1 12-bit right-aligned data holding register (DAC_OUT1_R12DH)

Address offset: 0x14

Reset value: 0x0000 0000

This register has to be accessed by word(32-bit).

31	30	29	28	27	26	25	24	23	22	21	20	19	18	17	16
Reserved															

15	14	13	12	11	10	9	8	7	6	5	4	3	2	1	0

Reserved	OUT1_DH[11:0]
	rw

Bits	Fields	Descriptions
31:12	Reserved	Must be kept at reset value.
11:0	OUT1_DH[11:0]	DACx_OUT1 12-bit right-aligned data. These bits specify the data that is to be converted by DACx_OUT1.

21.4.7. DACx_OUT1 12-bit left-aligned data holding register (DAC_OUT1_L12DH)

Address offset: 0x18

Reset value: 0x0000 0000

This register has to be accessed by word(32-bit).

31	30	29	28	27	26	25	24	23	22	21	20	19	18	17	16
Reserved															

15	14	13	12	11	10	9	8	7	6	5	4	3	2	1	0
OUT1_DH[11:0]												Reserved			
rw															

Bits	Fields	Descriptions
31:16	Reserved	Must be kept at reset value.
15:4	OUT1_DH[11:0]	DACx_OUT1 12-bit left-aligned data. These bits specify the data that is to be converted by DACx_OUT1.
3:0	Reserved	Must be kept at reset value.

21.4.8. DACx_OUT1 8-bit right-aligned data holding register (DAC_OUT1_R8DH)

Address offset: 0x1C

Reset value: 0x0000 0000

This register has to be accessed by word(32-bit).

31	30	29	28	27	26	25	24	23	22	21	20	19	18	17	16
Reserved															

15	14	13	12	11	10	9	8	7	6	5	4	3	2	1	0
Reserved								OUT1_DH[7:0]							
								rw							

Bits	Fields	Descriptions
31:8	Reserved	Must be kept at reset value.
7:0	OUT1_DH[7:0]	DACx_OUT1 8-bit right-aligned data These bits specify the MSB 8-bit of the data that is to be converted by DACx_OUT1.

21.4.9. DACx concurrent mode 12-bit right-aligned data holding register (DACC_R12DH)

Address offset: 0x20

Reset value: 0x0000 0000

This register has to be accessed by word(32-bit).

31	30	29	28	27	26	25	24	23	22	21	20	19	18	17	16
Reserved				OUT1_DH[11:0]											
				rw											

15	14	13	12	11	10	9	8	7	6	5	4	3	2	1	0
Reserved				OUT0_DH[11:0]											
				rw											

Bits	Fields	Descriptions
31:28	Reserved	Must be kept at reset value.
27:16	OUT1_DH[11:0]	DACx_OUT1 12-bit right-aligned data These bits specify the data that is to be converted by DACx_OUT1.
15:12	Reserved	Must be kept at reset value.
11:0	OUT0_DH[11:0]	DACx_OUT0 12-bit right-aligned data These bits specify the data that is to be converted by DACx_OUT0.

21.4.10. DACx concurrent mode 12-bit left-aligned data holding register (DACC_L12DH)

Address offset: 0x24

Reset value: 0x0000 0000

This register has to be accessed by word(32-bit)

31	30	29	28	27	26	25	24	23	22	21	20	19	18	17	16
OUT1_DH[11:0]												Reserved			
					rw										

15	14	13	12	11	10	9	8	7	6	5	4	3	2	1	0
OUT0_DH[11:0]												Reserved			
					rw										

Bits	Fields	Descriptions
31:20	OUT1_DH[11:0]	DACx_OUT1 12-bit left-aligned data These bits specify the data that is to be converted by DACx_OUT1.
19:16	Reserved	Must be kept at reset value.
15:4	OUT0_DH[11:0]	DACx_OUT0 12-bit left-aligned data These bits specify the data that is to be converted by DACx_OUT0.
3:0	Reserved	Must be kept at reset value.

21.4.11. DACx concurrent mode 8-bit right-aligned data holding register (DACC_R8DH)

Address offset: 0x28

Reset value: 0x0000 0000

This register has to be accessed by word(32-bit).

31	30	29	28	27	26	25	24	23	22	21	20	19	18	17	16
Reserved															

15	14	13	12	11	10	9	8	7	6	5	4	3	2	1	0
OUT1_DH [7:0]								OUT0_DH [7:0]							
rw								rw							

Bits	Fields	Descriptions
31:16	Reserved	Must be kept at reset value.
15:8	OUT1_DH[7:0]	DACx_OUT1 8-bit right-aligned data These bits specify the MSB 8-bit of the data that is to be converted by DACx_OUT1.
7:0	OUT0_DH[7:0]	DACx_OUT0 8-bit right-aligned data These bits specify the MSB 8-bit of the data that is to be converted by DACx_OUT0.

21.4.12. DACx_OUT0 data output register (DAC_OUT0_DO)

Address offset: 0x2C

Reset value: 0x0000 0000

This register has to be accessed by word(32-bit).

31	30	29	28	27	26	25	24	23	22	21	20	19	18	17	16
Reserved															

15	14	13	12	11	10	9	8	7	6	5	4	3	2	1	0
Reserved				OUT0_DO [11:0]											
				r											

Bits	Fields	Descriptions
31:12	Reserved	Must be kept at reset value.
11:0	OUT0_DO [11:0]	DACx_OUT0 12-bit output data These bits, which are read only, storage the data that is being converted by DACx_OUT0.

21.4.13. DACx_OUT1 data output register (DAC_OUT1_DO)

Address offset: 0x30

Reset value: 0x0000 0000

This register has to be accessed by word(32-bit).

31	30	29	28	27	26	25	24	23	22	21	20	19	18	17	16
Reserved															

15	14	13	12	11	10	9	8	7	6	5	4	3	2	1	0
Reserved				OUT1_DO [11:0]											
				r											

Bits	Fields	Descriptions
31:12	Reserved	Must be kept at reset value.
11:0	OUT1_DO [11:0]	DACx_OUT1 12-bit output data These bits, which are read only, storage the data that is being converted by DACx_OUT1.

21.4.14. DACx status register 0 (DAC_STAT0)

Address offset: 0x34

Reset value: 0x0000 0000

This register has to be accessed by word(32-bit).

31	30	29	28	27	26	25	24	23	22	21	20	19	18	17	16
BWT1	CALF1	DDUDR1	Reserved												
r	r	rc_w1													

15	14	13	12	11	10	9	8	7	6	5	4	3	2	1	0
BWT0	CALF0	DDUDR0	Reserved												
r	r	rc_w1													

Bits	Fields	Descriptions

31	BWT1	DACx_OUT1 SKSTR1 writing flag. This bit is set by the system when the sample and keep mode is enabled. When the DACx_SKSTR1 is writing,the bit is set, when the write operation is complete, the bit is cleared by hardware. 0: There is no writing operation of DACx_SKSTR1. 1: There is a writing operation of DACx_SKSTR1.
30	CALF1	DACx_OUT1 calibration offset flag. This bit is set and cleared by hardware. 0: The offset correction value is higher than or equal to the calibration value. 1: The offset correction value is lower than or equal to the calibration value.
29	DDUDR1	DACx_OUT1 DMA underrun flag. This bit is set by hardware and cleared by software (by writing it to 1). 0: no underrun occurred. 1: underrun occurred (Speed of DAC trigger is high than the DMA transfer).
28:16	Reserved	Must be kept at reset value.
15	BWT0	DACx_OUT0 SKSTR0 writing flag. This bit is set by the system when the sample and keep mode is enabled. When the DACx_SKSTR0 is writing,the bit is set, when the write operation is complete, the bit is cleared by hardware. 0: There is no writing operation of DACx_SKSTR0. 1: There is a writing operation of DACx_SKSTR0.
14	CALF0	DACx_OUT0 calibration offset flag. This bit is set and cleared by hardware. 0: The offset correction value is higher than or equal to the calibration value. 1: The offset correction value is lower than or equal to the calibration value.
13	DDUDR0	DACx_OUT0 DMA underrun flag. This bit is set by hardware and cleared by software (by writing it to 1). 0: no underrun occurred. 1: underrun occurred (Speed of DAC trigger is high than the DMA transfer).
12:0	Reserved	Must be kept at reset value.

21.4.15. DACx calibration register (DAC_CALR)

Address offset: 0x38

Reset value: 0x00XX 00XX

This register has to be accessed by word(32-bit).

31	30	29	28	27	26	25	24	23	22	21	20	19	18	17	16
Reserved											OTV1				
													rw		

15	14	13	12	11	10	9	8	7	6	5	4	3	2	1	0
Reserved											OTV0				
													rw		

Bits	Fields	Descriptions
31:21	Reserved	Must be kept at reset value.
20:16	OTV1[4:0]	DACx_OUT1 offset calibration value.
15:5	Reserved	Must be kept at reset value.
4:0	OTV0[4:0]	DACx_OUT0 offset calibration value.

21.4.16. DACx mode control register (DAC_MDCR)

Address offset: 0x3C

Reset value: 0x00XX 00XX

This register has to be accessed by word(32-bit).

31	30	29	28	27	26	25	24	23	22	21	20	19	18	17	16
Reserved													MODE1[2:0]		
														rw	

15	14	13	12	11	10	9	8	7	6	5	4	3	2	1	0
Reserved													MODE0[2:0]		
														rw	

Bits	Fields	Descriptions
31:19	Reserved	Must be kept at reset value.
18:16	MODE1[2:0]	DACx_OUT1 mode. These bits can be written when bit DEN1=0 and bit CALEN1=0 in the DAC_CTL0 register, the write operation is invalid when DEN1=1 or CALEN1=1. DACx_OUT1 in normal mode 000: Buffer is enabled and DACx_OUT1 is connected to external pin 001: Buffer is enabled and DACx_OUT1 is connected to on chip peripherals and to external pin. 010: Buffer is disabled and DACx_OUT1 is connected to external pin 011: Buffer is disabled and DACx_OUT1 is connected to on chip peripherals. DACx_OUT1 in sample and keep mode 100: Buffer is enabled and DACx_OUT1 is connected to external pin 101: Buffer is enabled and DACx_OUT1 is connected to on chip peripherals and to external pin. 110: Buffer is disabled and DACx_OUT1 is connected to on chip peripherals and to external pin. 111: Buffer is disabled and DACx_OUT1 is connected to on chip peripherals.
15:3	Reserved	Must be kept at reset value.
2:0	MODE0[2:0]	DACx_OUT0 mode.

These bits can be written when bit DEN0=0 and bit CALEN0=0 in the DACx_CTL0 register, the write operation is invalid when DEN0=1 or CALEN0=1.

DACx_OUT0 in normal mode

000: Buffer is enabled and DACx_OUT0 is connected to external pin

001: Buffer is enabled and DACx_OUT0 is connected to on chip peripherals and to external pin.

010: Buffer is disabled and DACx_OUT0 is connected to external pin

011: Buffer is disabled and DACx_OUT0 is connected to on chip peripherals.

DACx_OUT0 in sample and keep mode

100: Buffer is enabled and DACx_OUT0 is connected to external pin

101: Buffer is enabled and DACx_OUT0 is connected to on chip peripherals and to external pin.

110: Buffer is disabled and DACx_OUT0 is connected to on chip peripherals and to external pin.

111: Buffer is disabled and DACx_OUT0 is connected to on chip peripherals.

21.4.17. DACx sample and keep sample time register 0 (DAC_SKSTR0)

Address offset: 0x40

Reset value: 0x0000 0000

This register has to be accessed by word(32-bit).

31	30	29	28	27	26	25	24	23	22	21	20	19	18	17	16
Reserved															

15	14	13	12	11	10	9	8	7	6	5	4	3	2	1	0
Reserved						TSAMP0[9:0]									
										rc_w1					

Bits	Fields	Descriptions
31:10	Reserved	Must be kept at reset value.
9:0	TSAMP0[9:0]	DACx_OUT0 sample time.

21.4.18. DACx sample and keep sample time register 1 (DAC_SKSTR1)

Address offset: 0x44

Reset value: 0x0000 0000

This register has to be accessed by word(32-bit).

31	30	29	28	27	26	25	24	23	22	21	20	19	18	17	16
Reserved															

15	14	13	12	11	10	9	8	7	6	5	4	3	2	1	0

Reserved	TSAMP1[9:0]
	rc_w1

Bits	Fields	Descriptions
31:10	Reserved	Must be kept at reset value.
9:0	TSAMP1[9:0]	DACx_OUT1 sample time.

21.4.19. DACx sample and keep keep time register (DAC_SKKTR)

Address offset: 0x48

Reset value: 0x0001 0001

This register has to be accessed by word(32-bit).

31	30	29	28	27	26	25	24	23	22	21	20	19	18	17	16
Reserved						TKEEP1[9: 0]									
										rc_w1					

15	14	13	12	11	10	9	8	7	6	5	4	3	2	1	0
Reserved						TKEEP0[9: 0]									
										rc_w1					

Bits	Fields	Descriptions
31:26	Reserved	Must be kept at reset value.
25:16	TKEEP1[9: 0]	DACx_OUT1 keep time.
15:10	Reserved	Must be kept at reset value.
9:0	TKEEP0[9: 0]	DACx_OUT0 keep time.

21.4.20. DACx sample and keep refresh time register (DAC_SKRTR)

Address offset: 0x4C

Reset value: 0x0001 0001

This register has to be accessed by word(32-bit).

31	30	29	28	27	26	25	24	23	22	21	20	19	18	17	16
Reserved								TREF1[7:0]							
											rc_w1				

15	14	13	12	11	10	9	8	7	6	5	4	3	2	1	0
Reserved								TREF0[7:0]							
											rc_w1				

Bits	Fields	Descriptions
31:24	Reserved	Must be kept at reset value.

23:16	TREF1[7: 0]	DACx_OUT1 refresh time.
15:8	Reserved	Must be kept at reset value.
7:0	TREF0[7: 0]	DACx_OUT0 refresh time.

22. Watchdog timer (WDGT)

The watchdog timer (WDGT) is a hardware timing circuitry that can be used to detect system failures due to software malfunctions. There are two watchdog timer peripherals in the chip: free watchdog timer (FWDGT) and window watchdog timer (WWDGT). They offer a combination of a high safety level, flexibility of use and timing accuracy. Both watchdog timers are offered to resolve malfunctions of software.

The watchdog timer will generate a reset (or an interrupt in window watchdog timer) when the internal counter reaches a given value. The watchdog timer counter can be stopped while the processor is in the debug mode.

22.1. Free watchdog timer (FWDGT)

22.1.1. Overview

The free watchdog timer (FWDGT) has free clock source (IRC32K). Thereupon the FWDGT can operate even if the main clock fails. It's suitable for the situation that requires an independent environment and lower timing accuracy.

The Free watchdog timer generate a reset when the internal down counter reaches 0 or the counter is refreshed when the value of the counter is greater than the window register value. The register write protection function in free watchdog can be enabled to prevent it from changing the configuration unexpectedly.

22.1.2. Characteristics

- Free-running 12-bit down counter.
- Generate reset in two conditions when FWDGT is enabled:
  - Reset when the counter reached 0.
  - The counter is refreshed when the value of the counter is greater than the window register value.
- Free clock source, FWDGT can operate even if the main clock fails such as in standby and Deep-sleep modes.
- Hardware free watchdog bit, automatically start the FWDGT or not when power on.
- FWDGT debug mode, the FWDGT can stop or continue to work in debug mode.
- Configure FWDGSPD_STDBY or FWDGSPD_DPSLP, FWDGT would stop working, or else wake up the device and continue to work, in standby or deep sleep mode.

22.1.3. Function overview

The free watchdog consists of an 8-stage prescaler and a 12-bit down counter. ***Figure 22-1. Free watchdog block diagram*** shows the functional block of the free watchdog module.

Figure 22-1. Free watchdog block diagram

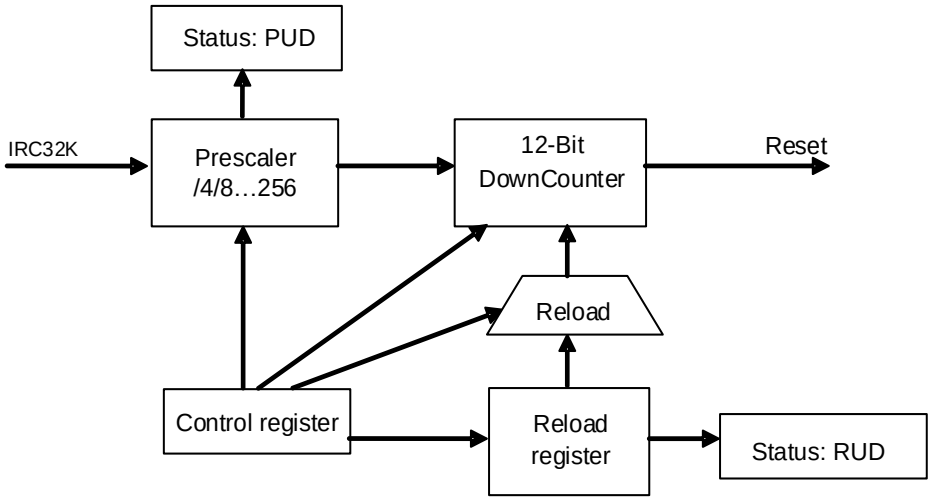

The free watchdog is enabled by writing the value (0xCCCC) to the control register (FWDGT_CTL), then counter starts counting down. When the counter reaches the value (0x000), there will be a reset.

The counter can be reloaded by writing the value (0xAAAA) to the FWDGT_CTL register at any time. The reload value comes from the FWDGT_RLD register. The software can prevent the watchdog reset by reloading the counter before the counter reaches the value (0x000).

By setting the appropriate window in the FWDGT_WND register, the FWDGT can also work as a window watchdog timer. A reset will occur if the reload operation is performed while the counter is greater than the value stored in the window register (FWDGT_WND). The default value of the FWDGT_WND is 0x0000 0FFF, so if it is not updated, the window option is disabled. A reload operation is performed in order to reset the downcounter to the FWDGT_RLD value and the prescaler counter to generate the next reload, as soon as the window value is changed.

The free watchdog can automatically start at power on when the hardware free watchdog bit in the device option bits is set. To avoid reset, the software should reload the counter before the counter reaches 0x000.

The FWDGT_PSC register, the FWDGT_RLD register and the FWDGT_WND register are write protected. Before writing these registers, the software should write the value (0x5555) to the FWDGT_CTL register. These registers will be protected again by writing any other value to the FWDGT_CTL register. When an update operation of the prescaler register (FWDGT_PSC), window register (FWDGT_WND) or the reload value register (FWDGT_RLD) is ongoing, the status bits in the FWDGT_STAT register are set.

If the FWDGT_HOLD bit in DBG module is cleared, the FWDGT continues to work even the Cortex™-M7 core halted (Debug mode). The FWDGT stops in Debug mode if the FWDGT_HOLD bit is set.

Table 22-1. Min/max FWDGT timeout period at 32KHz (IRC32K)

Prescaler divider	PSC[2:0] bits	Min timeout (ms) RLD[11:0]= 0x000	Max timeout (ms) RLD[11:0]= 0xFFF
1/4	000	0.125	512
1/8	001	0.25	1024
1/16	010	0.5	2048
1/32	011	1.0	4096
1/64	100	2.0	8192
1/128	101	4.0	16384
1/256	110 or 111	8.0	32768

The FWDGT timeout can be more accurately by calibrating the IRC32K.

Note: When after the execution of watchdog reload operation, if the MCU needs enter the deepsleep/standby mode immediately, more than 3 IRC32K clock intervals must be inserted in the middle of reload and deepsleep/standby mode commands by software setting.

22.1.4. Register definition

FWDGT base address: 0x5800 4800

Control register (FWDGT_CTL)

Address offset: 0x00

Reset value: 0x0000 0000

This register can be accessed by half-word(16-bit) or word(32-bit).

31	30	29	28	27	26	25	24	23	22	21	20	19	18	17	16
Reserved															

15	14	13	12	11	10	9	8	7	6	5	4	3	2	1	0
CMD[15:0]															
w															

Bits	Fields	Descriptions
31:16	Reserved	Must be kept at reset value.
15:0	CMD[15:0]	Write only. Several different functions are realized by writing these bits with different values. 0x5555: Disable the FWDGT_PSC, FWDGT_RLD and FWDGT_WND write protection. 0xCCCC: Start the free watchdog timer counter. When the counter reduces to 0, the free watchdog generates a reset 0xAAAA: Reload the counter

Prescaler register (FWDGT_PSC)

Address offset: 0x04

Reset value: 0x0000 0000

This register can be accessed by half-word(16-bit) or word(32-bit).

31	30	29	28	27	26	25	24	23	22	21	20	19	18	17	16
Reserved															

15	14	13	12	11	10	9	8	7	6	5	4	3	2	1	0
Reserved													PSC[2:0]		
														rw	

Bits	Fields	Descriptions
31:3	Reserved	Must be kept at reset value.
2:0	PSC[2:0]	Free watchdog timer prescaler selection. Write 0x5555 in the FWDGT_CTL register before writing these bits. During a write operation to this register, the PUD bit in the

FWDGT_STAT register is set and the value read from this register is invalid.

000: 1/4

001: 1/8

010: 1/16

011: 1/32

100: 1/64

101: 1/128

110: 1/256

111: 1/256

If several prescaler values are used by the application, it is mandatory to wait until PUD bit has been reset before changing the prescaler value. If the prescaler value has been updated, it is not necessary to wait until PUD has been reset before continuing code execution (Before entering low-power mode, it is necessary to wait until PUD is reset).

Reload register (FWDGT_RLD)

Address offset: 0x08

Reset value: 0x0000 0FFF

This register can be accessed by half-word(16-bit) or word(32-bit).

31	30	29	28	27	26	25	24	23	22	21	20	19	18	17	16
Reserved															

15	14	13	12	11	10	9	8	7	6	5	4	3	2	1	0
Reserved				RLD [11:0]											
				rw											

Bits	Fields	Descriptions
31:12	Reserved	Must be kept at reset value.
11:0	RLD[11:0]	Free watchdog timer counter reload value. Write 0xAAAA in the FWDGT_CTL register will reload the FWDGT conter with the RLD value. These bits are write-protected. Write 0X5555 to the FWDGT_CTL register before writing these bits. During a write operation to this register, the RUD bit in the FWDGT_STAT register is set and the value read from this register is invalid. If several reload values are used by the application, it is mandatory to wait until RUD bit has been reset before changing the reload value. If the reload value has been updated, it is not necessary to wait until RUD has been reset before continuing code execution (Before entering low-power mode, it is necessary to wait until RUD is reset).

Status register (FWDGT_STAT)

Address offset: 0x0C

Reset value: 0x0000 0000

This register can be accessed by half-word(16-bit) or word(32-bit).

31	30	29	28	27	26	25	24	23	22	21	20	19	18	17	16
Reserved															

15	14	13	12	11	10	9	8	7	6	5	4	3	2	1	0
Reserved													WUD	RUD	PUD
													r	r	r

Bits	Fields	Descriptions
31:3	Reserved	Must be kept at reset value.
2	WUD	Watchdog counter window value update When a write operation to FWDGT_WND register ongoing, this bit is set and the value read from FWDGT_WND register is invalid.
1	RUD	Free watchdog timer counter reload value update During a write operation to FWDGT_RLD register, this bit is set and the value read from FWDGT_RLD register is invalid.
0	PUD	Free watchdog timer prescaler value update During a write operation to FWDGT_PSC register, this bit is set and the value read from FWDGT_PSC register is invalid.

Window register (FWDGT_WND)

Address offset: 0x10

Reset value: 0x0000 0FFF

This register can be accessed by half-word(16-bit) or word(32-bit).

31	30	29	28	27	26	25	24	23	22	21	20	19	18	17	16
Reserved															

15	14	13	12	11	10	9	8	7	6	5	4	3	2	1	0
Reserved				WND[11:0]											
				rw											

Bits	Fields	Descriptions
31:12	Reserved	Must be kept at reset value.
11:0	WND[11:0]	Watchdog counter window value. These bits are used to contain the high limit of the window value to be compared to the downcounter. A reset will occur if the reload operation is performed while the counter is greater than the value stored in this register. The WUD bit in the FWDGT_STAT register must be reset in order to be able to change the reload value.

These bits are write protected. Write 0x5555 in the FWDGT_CTL register before writing these bits.

If several window values are used by the application, it is mandatory to wait until WUD bit has been reset before changing the window value. However, after updating the window value it is not necessary to wait until WUD is reset before continuing code execution except in case of low-power mode entry(Before entering low-power mode, it is necessary to wait until WUD is reset).

22.2. Window watchdog timer (WWDGT)

22.2.1. Overview

The window watchdog timer (WWDGT) is used to detect system failures due to software malfunctions. After the window watchdog timer starts, the value of down counter reduces progressively. The watchdog timer causes a reset when the counter reached 0x3F (the CNT[6] bit has been cleared). The watchdog timer also causes a reset when the counter is refreshed before the counter reached the window register value. So the software should refresh the counter in a limited window. The window watchdog timer generates an early wakeup status flag when the counter reaches 0x40, interrupt occurs if it is enabled.

The window watchdog timer clock is prescaled from the APB3 clock. The window watchdog timer is suitable for the situation that requires an accurate timing.

22.2.2. Characteristics

- Programmable free-running 7-bit down counter.
- Generate reset in two conditions when WWDGT is enabled:
  - Reset when the counter reached 0x3F.
  - The counter is refreshed when the value of the counter is greater than the window register value.
- Early wakeup interrupt (EWI): if the watchdog is started and the interrupt is enabled, the interrupt occurs when the counter reaches 0x40.
- WWDGT debug mode, the WWDGT can stop or continue to work in debug mode.

22.2.3. Function overview

If the window watchdog timer is enabled (set the WDGTEN bit in the WWDGT_CTL), the watchdog timer cause a reset when the counter reaches 0x3F (the CNT[6] bit has been cleared), or the counter is refreshed before the counter reaches the window register value.

Figure 22-2. Window watchdog timer block diagram

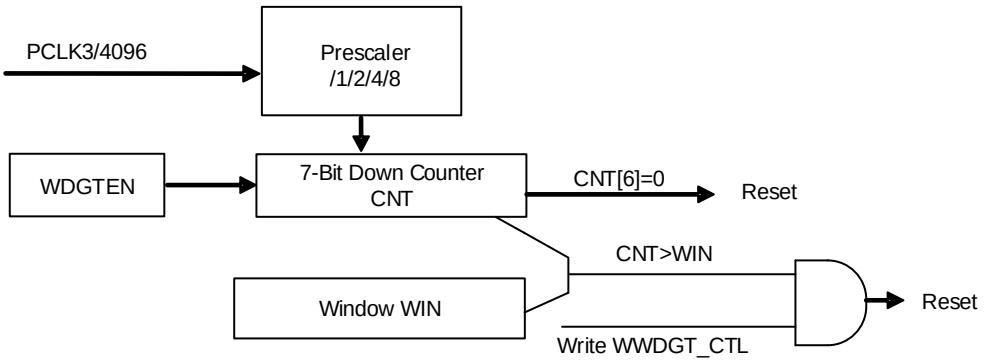

The watchdog is always disabled after power on reset. The software starts the watchdog by setting the WDGTEN bit in the WWDGT_CTL register. When window watchdog timer is enabled, the counter counts down all the time, the configured value of the counter should be greater than 0x3F(it implies that the CNT[6] bit should be set). The CNT[5:0] determine the maximum time interval between two reloading. The count down speed depends on the APB3 clock and the prescaler (PSC[1:0] bits in the WWDGT_CFG register).

The WIN[6:0] bits in the configuration register (WWDGT_CFG) specifies the window value. The software can prevent the reset event by reloading the down counter. The counter value is less than the window value and greater than 0x3F, otherwise the watchdog causes a reset.

The early wakeup interrupt (EWI) is enabled by setting the EWIE bit in the WWDGT_CFG register, and the interrupt will be generated when the counter reaches 0x40. The software can do something such as communication or data logging in the interrupt service routine (ISR) in order to analyse the reason of software malfunctions or save the important data before resetting the device. Moreover the software can reload the counter in ISR to manage a software system check and so on. In this case, the WWDGT will never generate a WWDGT reset but can be used for other things.

The EWI interrupt is cleared by writing '0' to the EWIF bit in the WWDGT_STAT register.

Figure 22-3. Window watchdog timing diagram

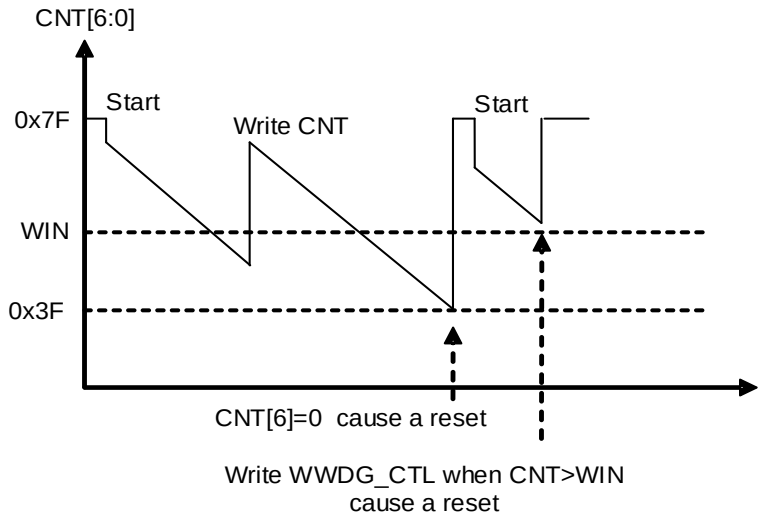

Calculate the WWDGT timeout by using the formula below.

$$t_{WWDGT}=t_{PCLK3} \times 4096 \times 2^{PSC} \times (CNT[5:0]+1) \quad (ms) \qquad (22\text{-}1)$$

where:

t_{WWDGT}: WWDGT timeout

t_{PCLK3}: APB3 clock period measured in ms

The ***Table 22-2. Min-max timeout value at 150 MHz (fPCLK3)*** shows the minimum and maximum values of the t_{WWDGT}.

Table 22-2. Min-max timeout value at 150 MHz (f_{PCLK3})

Prescaler divider	PSC[1:0]	Min timeout value CNT[6:0] =0x40	Max timeout value CNT[6:0]=0x7F
1/1	00	27.30 μs	1.75 ms
1/2	01	54.61 μs	3.50 ms
1/4	10	109.22 μs	6.99 ms
1/8	11	218.45 μs	13.98 ms

If the WWDGT_HOLD bit in DBG module is cleared, the WWDGT continues to work even the Cortex®-M7 core halted (Debug mode). While the WWDGT_HOLD bit is set, the WWDGT stops in Debug mode.

22.2.4. Register definition

WWDGT base address: 0x5000 3000

Control register (WWDGT_CTL)

Address offset: 0x00

Reset value: 0x0000 007F

This register can be accessed by half-word(16-bit) or word(32-bit)

31	30	29	28	27	26	25	24	23	22	21	20	19	18	17	16
Reserved															

15	14	13	12	11	10	9	8	7	6	5	4	3	2	1	0
Reserved								WDGTEN	CNT[6:0]						
								rs	rw						

Bits	Fields	Descriptions
31:8	Reserved	Must be kept at reset value.
7	WDGTEN	Start the Window watchdog timer. Cleared by a hardware reset. Writing 0 has no effect. 0: Window watchdog timer disabled 1: Window watchdog timer enabled
6:0	CNT[6:0]	The value of the watchdog timer counter. A reset occur when the value of this counter decreases from 0x40 to 0x3F. When the value of this counter is greater than the window value, writing this counter also causes a reset.

Configuration register (WWDGT_CFG)

Address offset: 0x04

Reset value: 0x0000 007F

This register can be accessed by half-word(16-bit) or word(32-bit)

31	30	29	28	27	26	25	24	23	22	21	20	19	18	17	16
Reserved															
															rw

15	14	13	12	11	10	9	8	7	6	5	4	3	2	1	0
Reserved						EWIE	PSC[1:0]		WIN[6:0]						
						rs	rw		rw						

Bits	Fields	Descriptions
31:10	Reserved	Must be kept at reset value.
9	EWIE	Early wakeup interrupt enable. If the bit is set, an interrupt occurs when the counter reaches 0x40. It can be cleared by a hardware reset or software clock reset. A write

		operation of 0 has no effect.
8:7	PSC[1:0]	Prescaler. The time base of the watchdog counter 00: (PCLK3 / 4096) / 1 01: (PCLK3 / 4096) / 2 10: (PCLK3 / 4096) / 4 11: (PCLK3 / 4096) / 8
6:0	WIN[6:0]	The Window value. A reset occur if the watchdog counter (CNT bits in WWDGT_CTL) is written when the value of the watchdog counter is greater than the Window value.

Status register (WWDGT_STAT)

Address offset: 0x08

Reset value: 0x0000 0000

This register can be accessed by half-word(16-bit) or word(32-bit)

31	30	29	28	27	26	25	24	23	22	21	20	19	18	17	16
Reserved															

15	14	13	12	11	10	9	8	7	6	5	4	3	2	1	0
Reserved															EWIF
															rc_w0

Bits	Fields	Descriptions
31:1	Reserved	Must be kept at reset value.
0	EWIF	Early wakeup interrupt flag. When the counter reaches 0x40 or refreshes before it reaches the window value, this bit is set by hardware even the interrupt is not enabled (EWIE in WWDGT_CFG is cleared). This bit is cleared by writing 0. There is no effect when writing 1.

23. Real time clock (RTC)

23.1. Overview

The RTC provides a time which includes hour / minute / second / sub-second and a calendar includes year / month / day / week day. The time and calendar are expressed in BCD code except sub-second. Sub-second is expressed in binary code. Hour adjust for daylight saving time. Working in power saving mode and smart wakeup is software configurable. Support improving the calendar accuracy using extern accurate low frequency clock.

23.2. Characteristics

- Support calendar function, which can support year, month, date, day, hours, minutes, seconds and subseconds (date is the day of week and day is the day of month)
- Daylight saving compensation supported, which is realized through software
- External high-accurate low frequency(50Hz or 60Hz) clock used to achieve higher calendar accuracy performed by reference clock detection option function
- Atomic clock adjust (max adjust accuracy is 0.95PPM) for calendar calibration performed by digital calibration function
- Sub-second adjustment by shift function
- Time-stamp function for saving event time
- Two tamper sources can be chosen and tamper type is configurable (RTC_TAMP0 and RTC_TAMP1)
- Programmable calendar and two field maskable alarms
- Maskable interrupt source:
  - Alarm 0 and Alarm 1
  - Time-stamp detection
  - Tamper detection
  - Auto wakeup event
- Thirty-two 32-bit (128 bytes total) universal backup registers which can keep data under power saving mode. Backup register will be reset if tamper event detected

23.3. Function overview

23.3.1. Block diagram

Figure 23-1. Block diagram of RTC

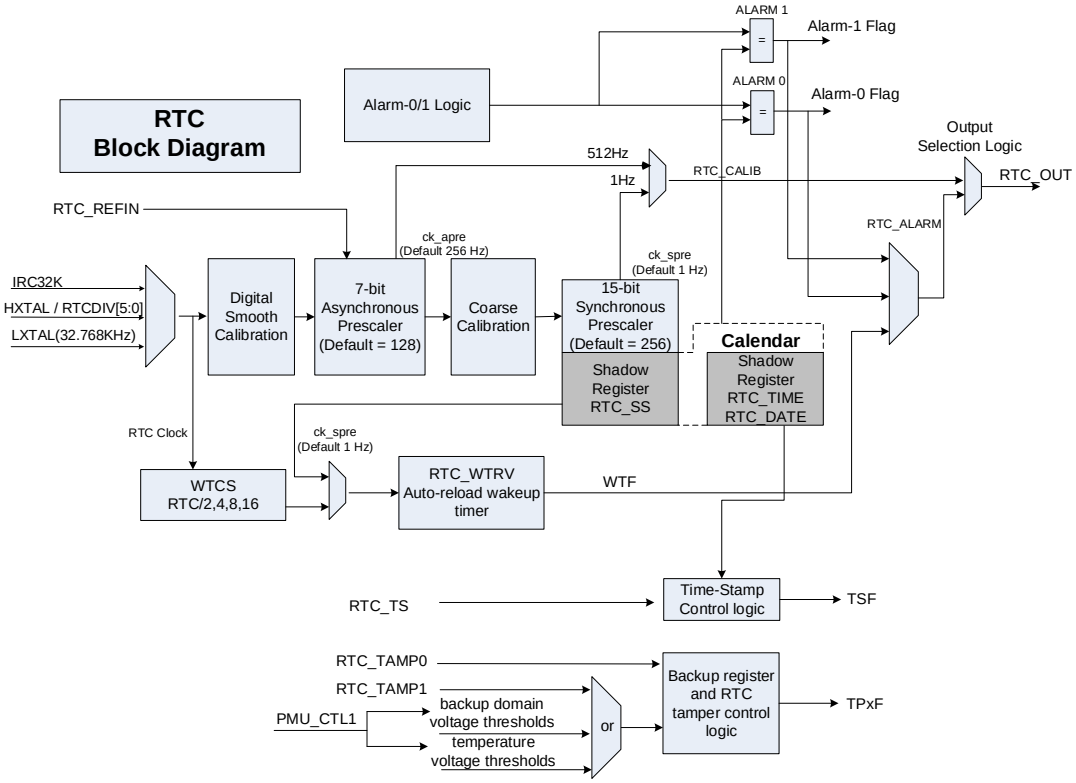

The RTC unit includes:

- Two alarm event / interrupt and support two tamper event / interrupt from I/Os
- When tamper detection event happen, there will generate a timestamp event
- When tamper detection event happen, the backup registers will be erased
- When power switch is switched to the V_{BAT}, there will generate a timestamp event
- 32-bit backup registers, which number increased to 32
- Optional RTC output function:
  - 512Hz (default prescale): RTC_OUT(PC13 or PB2)
  - 1Hz(default prescale): RTC_OUT(PC13 or PB2)
  - Alarm event(polarity is configurable): RTC_OUT(PC13 or PB2)
  - Automatic wakeup event(polarity is configurable): RTC_OUT(PC13 or PB2)
- Optional RTC input function:
  - time stamp event detection: RTC_TS(PC13)
  - tamper 0 event detection: RTC_TAMP0(PC13)
  - tamper 1 event detection: RTC_TAMP1(PC1)
  - reference clock input: RTC_REFIN(PB15 or PB13)
  - tamper 1 event detection not only can be generated by I/O, when VBTMEN bit in PMU_CTL1 is set, the backup domain voltage thresholds or temperature voltage thresholds also can generate tamper 1 event detection.

23.3.2. Clock source and prescalers

RTC unit has three independent clock sources: LXTAL, IRC32K and HXTAL with divided by

RTCDIV[5:0] (configured in RCU_CFG0 register).

In the RTC unit, there are two prescalers used for implementing the calendar and other functions. One prescaler is a 7-bit asynchronous prescaler and the other is a 15-bit synchronous prescaler. Asynchronous prescaler is mainly used for reducing power consumption. The asynchronous prescaler is recommended to set as high as possible if both prescalers are used.

The frequency formula of two prescalers is shown as below:

$$f_{ck_apre} = \frac{f_{rtcclk}}{FACTOR_A + 1} \quad (23\text{-}1)$$

$$f_{ck_spre} = \frac{f_{ck_apre}}{FACTOR_S + 1} = \frac{f_{rtcclk}}{(FACTOR_A + 1)*(FACTOR_S + 1)} \quad (23\text{-}2)$$

The ck_apre clock is used to driven the RTC_SS down counter which stands for the time left to next second in binary format and when it reaches 0 it will automatically reload FACTOR_S value. The ck_spre clock is used to driven the calendar registers. Each clock will make second plus one.

23.3.3. Shadow registers introduction

BPSHAD control bit decides the location when APB bus accesses the RTC calendar register RTC_DATE, RTC_TIME and RTC_SS. By default, the BPSHAD is cleared, and APB bus accesses the shadow calendar registers. Shadow calendar registers is updated with the value of real calendar registers every two RTC clock and at the same time RSYNF bit will be set once. This update mechanism is not performed in Deep-Sleep mode and Standby mode. When exiting these modes, software must clear RSYNF bit and wait it is asserted (the max wait time is 2 RTC clock) before reading calendar register under BPSHAD=0 situation.

Note: When reading calendar registers (RTC_SS, RTC_TIME, RTC_DATE) under BPSHAD=0, the frequency of the APB clock (f_{apb}) must be at least 7 times the frequency of the RTC clock (f_{rtcclk}).

System reset will reset the shadow calendar registers.

23.3.4. Configurable and field maskable alarm

RTC alarm function is divided into some fields and each has a maskable bit.

RTC alarm function can be enabled or disabled by ALRMxEN(x=0,1) bit in RTC_CTL. If all the alarm fields value match the corresponding calendar value when ALRMxEN=1(x=0,1), the Alarm flag will be set.

Note: FACTOR_S in the RTC_PSC register must be larger than 3 if MSKS bit reset in RTC_ALRMxTD(x=0,1).

If a field is masked, the field is considered as matched in logic. If all the fields have been masked, the Alarm Flag will assert 3 RTC clock later after ALRMxEN(x=0,1) is set.

23.3.5. Configurable periodic auto-wakeup counter

In the RTC block, there is a 16-bit down counter designed to generate periodic wakeup flag.

This function is enabled by set the WTEN to 1 and can be running in power saving mode.

Two clock sources can be chose for the down counter:

1) RTC clock divided by 2/4/8/16

   Assume RTC clock comes from LXTAL (32.768 KHz), this can periodically assert wakeup interrupt from 122us to 32s under the resolution down to 61us.

2) Internal clock ck_spre

   Assume ck_spre is 1Hz, this can periodically assert wakeup interrupt from 1s to 36 hours under the resolution down to 1s.

   - WTCS[2:1] = 0b10.This will make period to be 1s to 18 hours
   - WTCS[2:1] = 0b11.This will make period to be 18 to 36 hours

When this function is enabled, the down counter is running. When it reaches 0, the WTF flag is set and the wakeup counter is automatically reloaded with RTC_WUT value.

When WTF asserts, software must then clear it.

If WTIE is set and this counter reaches 0, a wakeup interrupt will make system exit from the power saving mode. System reset has no influence on this function.

WTF is also can be output to RTC_OUT from RTC_ALARM channel.

23.3.6. RTC initialization and configuration

RTC register write protection

BKPWEN bit in the PMU_CTL register is cleared in default, so writing to RTC registers needs setting BKPWEN bit ahead of time.

After power-on reset, most of RTC registers are write protected. Unlocking this protection is the first step before writing to them.

Following below steps will unlock the write protection:

1. Write ‘0xCA’ into the RTC_WPK register
2. Write ‘0x53’ into the RTC_WPK register

Writing a wrong value to RTC_WPK will make write protection valid again. The state of write protection is not affected by system reset. Following registers are writing protected but others are not:

RTC_TIME, RTC_DATE, RTC_CTL, RTC_STAT, RTC_PSC, RTC_WUT, RTC_ALRM0TD, RTC_ALRM1TD, RTC_SHIFTCTL, RTC_HRFC, RTC_ALRM0SS, RTC_ALRM1SS, RTC_CFG

Calendar initialization and configuration

The prescaler and calendar value can be programmed by the following steps:

1. Enter initialization mode (by setting INITM=1) and polling INITF bit until INITF=1.
2. Program both the asynchronous and synchronous prescaler factors in RTC_PSC register.
3. Write the initial calendar values into the shadow calendar registers (RTC_TIME and RTC_DATE), and use the CS bit in the RTC_CTL register to configure the time format (12 or 24 hours).
4. Exit the initialization mode (by setting INITM=0).

About 4 RTC clock cycles later, real calendar registers will load from shadow registers and calendar counter restarts.

Note: Reading calendar register (BPSHAD=0) after initialization, software should confirm the RSYNF bit to 1.

YCM flag indicates whether the calendar has been initialized by checking the year field of calendar.

Daylight saving Time

RTC unit supports daylight saving time adjustment through S1H, A1H and DSM bit.

S1H and A1H can subtract or add 1 hour to the calendar when the calendar is running.S1H and A1H operation can be tautologically set and DSM bit can be used to recording this adjust operation. After setting the S1H/A1H, subtract/add 1 hour will perform when next second comes.

Alarm function operation process

To avoid unexpected alarm assertion and metastable state, alarm function has an operation flow:

1. Disable Alarm (by resetting ALRMxEN(x=0,1) in RTC_CTL)
2. Set the Alarm registers needed(RTC_ALRMxTD/RTC_ALRMxSS(x=0,1))
3. Enable Alarm function (by setting ALRMxEN(x=0,1) in the RTC_CTL)

23.3.7. Calendar reading

Reading calendar registers under BPSHAD=0

When BPSHAD=0, calendar value is read from shadow registers. For the existence of synchronization mechanism, a basic request has to meet: the APB bus clock frequency must be equal to or greater than 7 times the RTC clock frequency.APB bus clock frequency lower than RTC clock frequency is not allowed in any case whatever happens.

When APB bus clock frequency is not equal to or greater than 7 times the RTC clock frequency, the calendar reading flow should be obeyed:

1. reading calendar time register and date register twice
2. if the two values are equal, the value can be seen as the correct value
3. if the two values are not equal, a third reading should performed
4. the third value can be seen as the correct value

RSYNF is asserted once every 2 RTC clock and at this time point, the shadow registers will be updated to current time and date.

To ensure consistency of the 3 values (RTC_SS, RTC_TIME, and RTC_DATE), below consistency mechanism is used in hardware:

1. reading RTC_SS will lock the updating of RTC_TIME and RTC_DATE
2. reading RTC_TIME will lock the updating of RTC_DATE
3. reading RTC_DATE will unlock updating of RTC_TIME and RTC_DATE

If the software wants to read calendar in a short time interval(smaller than 2 RTCCLK periods), RSYNF must be cleared by software after the first calendar read, and then the software must wait until RSYNF is set again before next reading.

In below situations, software should wait RSYNF bit asserted before reading calendar registers (RTC_SS, RTC_TIME, and RTC_DATE):

1. after a system reset
2. after an initialization
3. after shift function

Especially that software must clear RSYNF bit and wait it asserted before reading calendar register after wakeup from power saving mode.

Reading calendar registers under BPSHAD=1

When BPSHAD=1, RSYNF is cleared and maintains as 0 by hardware so reading calendar registers does not care about RSYNF bit. Current calendar value is read from real-time calendar counter directly. The benefit of this configuration is that software can get the real current time without any delay after wakeup from power saving mode (Deep-sleep /Standby Mode).

Because of no RSYNF bit periodic assertion, the results of the different calendar registers (RTC_SS/RTC_TIME/RTC_DATE) might not be coherent with each other when clock ck_apre edge occurs between two reading calendar registers.

In addition, if current calendar register is changing and at the same time the APB bus reading calendar register is also performing, the value of the calendar register read out might be not correct.

To ensure the correctness and consistency of the calendar value, software must perform reading operation as this: read all calendar registers continuously, if the last two values are the same, the data is coherent and correct.

23.3.8. Resetting the RTC

There are two reset sources used in RTC unit: system reset and backup domain reset.

System reset will affect calendar shadow registers and some bits of the RTC_STAT. When system reset is valid, the bits or registers mentioned before are reset to the default value.

Backup domain reset will affect the following registers and system reset will not affect them:

- RTC current real-time calendar registers
- RTC Control register (RTC_CTL)
- RTC Prescaler register (RTC_PSC)
- RTC Wakeup timer register (RTC_WUT)
- RTC High resolution frequency compensation register (RTC_HRFC)
- RTC Shift control register (RTC_SHIFTCTL)
- RTC Time stamp registers (RTC_SSTS/RTC_TTS/RTC_DTS)
- RTC Tamper register (RTC_TAMP)
- RTC Backup registers (RTC_BKPx, RTC_CFG)
- RTC Alarm registers (RTC_ALRMxSS/RTC_ALRMxTD(x=0,1))

The RTC unit will go on running when system reset occurs or enter power saving mode, but if backup domain reset occurs, RTC will stop counting and all registers will reset.

23.3.9. RTC shift function

When there is a remote clock with higher degree of precision and RTC 1Hz clock (ck_spre) has an offset (in a fraction of a second) with the remote clock, RTC unit provides a function named shift function to remove this offset and thus make second precision higher.

RTC_SS register indicates the fraction of a second in binary format and is down counting when RTC is running. Therefore by adding the SFS[14:0] value to the synchronous prescaler counter SSC[15:0] or by adding the SFS[14:0] value to the synchronous prescaler counter SSC[15:0] and at the same time set A1S bit can delay or advance the time when next second arrives.

The maximal RTC_SS value depends on the FACTOR_S value in RTC_PSC. The higher FACTOR_S, the higher adjust precision.

Because of the 1Hz clock (ck_spre) is generated by FACTOR_A and FACTOR_S, the higher FACTOR_S means the lower FACTOR_A, then more power consuming.

Note: Before using shift function, the software must check the MSB of SSC in RTC_SS (SSC[15]) and confirm it is 0.

After writing RTC_SHIFTCTL register, the SOPF bit in RTC_STAT will be set at once. When shift operation is complete, SOPF bit is cleared by hardware. System reset does not affect SOPF bit.

Shift operation only works correctly when REFEN=0.

Software must not write to RTC_SHIFTCTL if REFEN=1.

23.3.10. RTC reference clock detection

RTC reference clock detection is another way to increase the precision of RTC second. To enable this function, you should have an external clock source (50Hz or 60 Hz) which is more precise than LXTAL clock source.

After enabling this function (REFEN=1), each 1Hz clock (ck_spre) edge is compared to the nearest RTC_REFIN clock edge. In most cases, the two clock edges are aligned every time. But when two clock edges are misaligned for the reason of LXTAL poor precision, the RTC reference clock detection function will shift the 1Hz clock edge a little to make next 1Hz clock edge aligned to reference clock edge.

When REFEN=1, a time window is applied at every second update time different detection state will use different window period.

7 ck_apre window is used when detecting the first reference clock edge and 3 ck_apre window is used for the edge aligned operation.

Whatever window used, the asynchronous prescaler counter will be forced to reload when the reference clock is detected in the window. When the two clock (ck_spre and reference clock) edges are aligned, this reload operation has no effect for 1Hz clock. But when the two clock edge are not aligned, this reload operation will shift ck_spre clock edge a bit to make the ck_spre(1Hz) clock edge aligned to the reference clock edge.

When reference detection function is running while the external reference clock is removed (no reference clock edge found in 3 ck_apre window), the calendar updating still can be performed by LXTAL clock only. If the reference clock is recovered later, detection function will use 7 ck_apre window to identify the reference clock and use 3 ck_apre window to adjust the 1Hz clock (ck_spre) edge.

Note: Software must configure the FACTOR_A=0x7F and FACTOR_S=0xFF before enabling reference detection function (REFEN=1)

Reference detection function does not work in Standby Mode.

23.3.11. RTC smooth digital calibration

RTC smooth calibration function is a way to calibrate the RTC frequency based on RTC clock in a configurable period time.

This calibration is equally executed in a period time and the cycle number of the RTC clock in the period time will be added or subtracted. The resolution of the calibration is about 0.954PPM with the range from -487.1PPM to +488.5PPM.

The calibration period time can be configured to the $2^{20}/2^{19}/2^{18}$ RTC clock cycles which stands for 32/16/8 seconds if RTC input frequency is 32.768 KHz.

The High resolution frequency compensation register (RTC_HRFC) specifies the number of RTCCLK clock cycles to be calibrated during the period time:

So using CMSK can mask clock cycles from 0 to 511 and thus the RTC frequency can be reduced by up to 487.1PPM.

To increase the RTC frequency the FREQI bit can be set. If FREQI bit is set, there will be 512 additional cycles to be added during period time which means every 211/210/29(32/16/8 seconds) RTC clock insert one cycle.

So using FREQI can increase the RTC frequency by 488.5PPM.

The combined using of CMSK and FREQI can adjust the RTC cycles from -511 to +512 cycles in the period time which means the calibration range is -487.1PPM to +488.5PPM with a resolution of about 0.954PPM.

When calibration function is running, the output frequency of calibration is calculated by the following formula:

$$f_{cal}=f_{rtcclk} \times (1+\frac{FREQI\times512-CMSK}{2^N+CMSK-FREQI\times512}) \quad (23\text{-}3)$$

Note: N=20/19/18 for 32/16/8 seconds window period

Calibration when FACTOR_A < 3

When asynchronous prescaler value (FACTOR_A) is set to less than 3, software should not set FREQI bit to 1 when using calibration function. FREQI setting will be ignored when FACTOR_A<3.

When the FACTOR_A is less than 3, the FACTOR_S value should be set to a value less than the nominal value. Assuming that RTC clock frequency is nominal 32.768 KHz, the corresponding FACTOR_S should be set as following rule:

FACTOR_A = 2: 2 less than nominal FACTOR_S (8189 with 32.768 KHz)

FACTOR_A = 1: 4 less than nominal FACTOR_S (16379 with 32.768 KHz)

FACTOR_A = 0: 8 less than nominal FACTOR_S (32759 with 32.768 KHz)

When the FACTOR_A is less than 3, CMSK is 0x100, the formula of calibration frequency is as follows:

$$f_{cal}=f_{rtcclk} \times (1+\frac{256-CMSK}{2^N+CMSK-256}) \quad (23\text{-}4)$$

Note: N=20/19/18 for 32/16/8 seconds window period

Verifying the RTC calibration

Calibration 1Hz output is provided to assist software to measure and verify the RTC precision.

Up to 2 RTC clock cycles measurement error may occur when measuring the RTC frequency over a limited measurement period. To eliminate this measurement error the measurement period should be the same as the calibration period.

- When the calibration period is 32 seconds(this is default configuration)

Using exactly 32s period to measure the accuracy of the calibration 1Hz output can guarantee

the measure is within 0.477PPM (0.5 RTCCLK cycles over 32s)

- When the calibration period is 16 seconds(by setting CWND16 bit)

In this configuration, CMSK[0] is fixed to 0 by hardware. Using exactly 16s period to measure the accuracy of the calibration 1Hz output can guarantee the measure is within 0.954PPM (0.5 RTCCLK cycles over 16s)

- When the calibration period is 8 seconds(by setting CWND8 bit)

In this configuration, CMSK[1:0] is fixed to 0 by hardware. Using exactly 8s period to measure the accuracy of the calibration 1Hz output can guarantee the measure is within 1.907PPM (0.5 RTCCLK cycles over 8s)

Re-calibration on-the-fly

When the INITF bit is 0, software can update the value of RTC_HRFC using following steps:

1. Wait the SCPF=0
2. Write the new value into RTC_HRFC register
3. After 3 ck_apre clocks, the new calibration settings take effect

23.3.12. Time-stamp function

Time-stamp function is performed on RTC_TS pin and is enabled by control bit TSEN. It is also enabled by control bit ITSEN

When a time-stamp event occurs on RTC_TS pin (TSEN = 1), the calendar value will be saved in time-stamp registers (RTC_DTS/RTC_TTS/RTC_SSTS) and the time-stamp flag (TSF) is set to 1 by hardware. Time-stamp event can generate an interrupt if time-stamp interrupt enable (TSIE) is set.

When an internal time-stamp event detected (ITSEN = 1), the calendar value will be saved in time-stamp registers (RTC_DTS/RTC_TTS/RTC_SSTS), the time-stamp flag (TSF) and internal time-stamp flag (ITSF) is set to 1 by hardware. Time-stamp event can generate an interrupt if internal time-stamp interrupt enable (TSIE) is set.The internal timestamp event is generated by the switch to the V_{BAT} supply

Time-stamp registers only record the calendar at the first time time-stamp event occurs which means that time-stamp registers will not change when TSF=1.

To extend the time-stamp event source, one optional feature is provided: tamper function can also be considered as time-stamp function if TPTS is set.

Note: When the time-stamp event occurs, TSF is set 2 ck_apre cycles delay because of synchronization mechanism.

23.3.13. Tamper detection

The RTC_TAMPx pin input can be used for tamper event detection under edge detection

mode or level detection mode with configurable filtering setting.

The purposes of the tamper detect configuration are the following:

- The default configuration will erase the RTC backup registers, BKP sram and RTDEC register
- It can wakeup from DeepSleep and Standby modes, and generate an interrupt

RTC backup registers (RTC_BKPx)

The RTC backup registers are located in the VDD backup domain that remains powered-on by V_{BAT} even if V_{DD} power is switched off. The wake up action from Standby Mode or System Reset does not affect these registers.

These registers are only reset by detected tamper event and backup domain reset.

Tamper detection function initialization

RTC tamper detection function can be independently enabled on tamper input pin by setting corresponding TPxEN bit. Tamper detection configuration is set before enable TPxEN bit.

The TPxF flag is set after the tamper event occurs on the pin with the following latency:

- When FLT is different from 0x0 (Level detection mode with configurable filtering), there are three ck_apre cycles
- When TPTS is set (Timestamp on tamper event), there are three ck_apre cycles
- When FLT is reset (Edge detection mode on tamper input detection) and TPTS is reset, there is no latency.

When TPxF is set during the latency, new tamper cannot be detected occurring on the same pin.

Timestamp on tamper event

The TPTS bit can control whether the tamper detection function is used as time-stamp function. If the bit is set to 1, the TSF bit will be set when the tamper event detected as if “enable” the time-stamp function. Whatever the TPTS bit is, the TPxF will assert when tamper event detected.

Edge detection mode on tamper input detection

When FLT bit is set to 0x0, the tamper detection is set to edge detection mode and TPxEG bit determines the rising edge or falling edge is the detecting edge. When tamper detection is under edge detection mode, the internal pull-up resistors on the tamper detection input pin are deactivated.

Because of detecting the tamper event will reset the backup registers (RTC_BKPx), writing to the backup register should ensure that the tamper event reset and the writing operation will not occur at the same time, a recommend way to avoid this situation is disable the tamper

detection before writing to the backup register and re-enable tamper detection after finish writing.

Note: Tamper detection is still running when V_{DD} power is switched off if tamper is enabled.

Level detection mode with configurable filtering on tamper input detection

When FLT bit is not reset to 0x0, the tamper detection is set to level detection mode and FLT bit determines the consecutive number of samples (2, 4 or 8) needed for valid level. When DISPU is set to 0x0(this is default), the internal pull-up resistance will pre-charge the tamper input pin before each sampling and thus larger capacitance is allowed to connect to the tamper input pin. The pre-charge duration is configured through PRCH bit. Higher capacitance needs long pre-charge time.

The time interval between each sampling is also configurable. Through adjusting the sampling frequency (FREQ), software can balance between the power consuming and tamper detection latency.

23.3.14. Calibration clock output

Calibration clock can be output on the RTC_OUT if COEN bit is set to 1.

When the COS bit is set to 0(this is default) and asynchronous prescaler is set to 0x7F(FACTOR_A), the frequency of RTC_CALIB is f_{rtcclk}/64.When the RTCCLK is 32.768KHz, RTC_CALIB output is corresponding to 512Hz.It's recommend to using rising edge of RTC_CALIB output for there may be a light jitter on falling edge.

When the COS bit is set to 1, the RTC_CALIB frequency is:

$$f_{rtc_calib} = \frac{f_{rtcclk}}{(FACTOR_A+1)\times(FACTOR_S+1)} \quad (23\text{-}5)$$

When the RTCCLK is 32.768 KHz, RTC_CALIB output is corresponding to 1Hz if prescaler are default values.

23.3.15. Alarm output

When OS control bits are not reset, RTC_ALARM alternate function output is enabled. This function will directly output the content of alarm flag or auto wakeup flag bit in RTC_STAT.

The OPOL bit in RTC_CTL can configure the polarity of the alarm or auto wakeup flag output which means that the RTC_ALARM output is the opposite of the corresponding flag bit or not.

23.3.16. RTC pin configuration

RTC_OUT, RTC_TS and RTC_TAMP0 use the same pin (PC13). Function of PC13 is controlled by the RTC and regardless of PC13 GPIO configuration. The RTC functions of PC13 are available in all low-power modes and in VBAT only mode.

The priority of the PC13 output shown in ***Table 23-1 RTC pin configuration***

Table 23-1 RTC pin configuration and function

function configuration and pin function	OS[1:0] (output selection)	COEN (calibration output)	TP0EN (tamper enabled)	TSEN (time stamp enabled)	ALRMOUTTYPE (RTC_ALARM output type)
Alarm out output open drain	01 or 10 or 11	-	-	-	0
Alarm out output push-pull	01 or 10 or 11	-	-	-	1
Calibration output push-pull	00	1	-	-	-
TAMP0 input floating	00	0	1	0	-
TIMESTAMP and TAMP0 input floating	00	0	1	1	Don't care
TIMESTAMP input floating	00	0	0	1	Don't care
Standard GPIO	00	0	0	0	Don't care

The PC13 can be used for the following purposes:

- RTC_ALARM output: this output can be RTC Alarm 0, RTC Alarm 1 or RTC Wakeup depending on the OS[1:0] bits in the RTC_CTL register
- RTC_CALIB output: this feature is enabled by setting the COEN[23] in the RTC_CTL register
- RTC_TAMP0: tamper event detection
- RTC_TS: time stamp event detection

ALRMOUTTYPE in RTC_CFG is used to select whether the RTC_ALARM is output in push-pull or open-drain mode.

It is possible to output RTC_OUT on PB2 or PC13 pin thanks to OUT2EN bit in RTC_CFG[31]. This output is not available in VBAT / Standby / Shutdown mode.

23.3.17. RTC power saving mode management

Table 23-2 RTC power saving mode management

Mode	Active in Mode	Exit Mode
Sleep	Yes	RTC Interrupts
Deep-sleep	Yes: if clock source is LXTAL or IRC32K	RTC Alarm / Tamper Event / Timestamp Event / Wake up
Standby	Yes: if clock source is LXTAL or IRC32K	RTC Alarm / Tamper Event / Timestamp Event / Wake up

23.3.18. RTC interrupts

All RTC interrupts are connected to the EXTI controller.

Below steps should be followed if you want to use the RTC alarm/tamper/timestamp/auto wakeup interrupt:

1. Configure and enable the corresponding interrupt line to RTC alarm/tamper/timestamp/auto wakeup event of EXTI and set the rising edge for triggering
2. Configure and enable the RTC alarm/tamper/timestamp/auto wakeup interrupt
3. Configure and enable the RTC alarm/tamper/timestamp/auto wakeup function

Table 23-3 RTC interrupts control

Interrupt	Event flag	Control Bit	Exit Sleep	Exit Deep-sleep And Standby
Alarm 0	ALRM0F	ALRM0IE	Y	Y(1)
Alarm 1	ALRM1F	ALRM1IE	Y	Y(1)
Wakeup	WTF	WTIE	Y	Y(1)
Timestamp	TSF	TSIE	Y	Y(1)
Tamper 0	TP0F	TPIE	Y	Y(1)
Tamper 1	TP1F	TPIE	Y	Y(1)

(1) Only active when RTC clock source is LXTAL or IRC32K.

23.4. Register definition

RTC base address: 0x5800 4000

23.4.1. Time register (RTC_TIME)

Address offset: 0x00

System reset value: 0x0000 0000 when BPSHAD = 0.

Not affected when BPSHAD = 1.

This register is write protected and can only be written in initialization state

This register has to be accessed by word (32-bit)

31	30	29	28	27	26	25	24	23	22	21	20	19	18	17	16
Reserved									PM	HRT[1:0]		HRU[3:0]			
									rw	rw		rw			

15	14	13	12	11	10	9	8	7	6	5	4	3	2	1	0
Reserved	MNT[2:0]			MNU[3:0]				Reserved	SCT[2:0]			SCU[3:0]			
	rw			rw					rw			rw			

Bits	Fields	Descriptions
31:23	Reserved	Must be kept at reset value.
22	PM	AM/PM mark 0: AM or 24-hour format 1: PM
21:20	HRT[1:0]	Hour tens in BCD code
19:16	HRU[3:0]	Hour units in BCD code
15	Reserved	Must be kept at reset value.
14:12	MNT[2:0]	Minute tens in BCD code
11:8	MNU[3:0]	Minute units in BCD code
7	Reserved	Must be kept at reset value.
6:4	SCT[2:0]	Second tens in BCD code
3:0	SCU[3:0]	Second units in BCD code

23.4.2. Date register (RTC_DATE)

Address offset: 0x04

System reset value: 0x0000 2101 when BPSHAD = 0.

Not affected when BPSHAD = 1.

This register is write protected and can only be written in initialization state

This register has to be accessed by word (32-bit)

31	30	29	28	27	26	25	24	23	22	21	20	19	18	17	16
Reserved								YRT[3:0]				YRU[3:0]			
								rw				rw			

15	14	13	12	11	10	9	8	7	6	5	4	3	2	1	0
DOW[2:0]			MONT	MONU[3:0]				Reserved		DAYT[1:0]		DAYU[3:0]			
rw			rw	rw						rw		rw			

Bits	Fields	Descriptions
31:24	Reserved	Must be kept at reset value.
23:20	YRT	Year tens in BCD code
19:16	YRU[3:0]	Year units in BCD code
15:13	DOW[2:0]	Days of the week 0x0: Reserved 0x1: Monday … 0x7: Sunday
12	MONT	Month tens in BCD code
11:8	MONU[3:0]	Month units in BCD code
7:6	Reserved	Must be kept at reset value.
5:4	DAYT[1:0]	Day tens in BCD code
3:0	DAYU[3:0]	Day units in BCD code

23.4.3. Control register (RTC_CTL)

Address offset: 0x08

System reset: not affected

Backup domain reset value: 0x0000 0000

This register is writing protected

This register has to be accessed by word (32-bit)

31	30	29	28	27	26	25	24	23	22	21	20	19	18	17	16
Reserved							ITSEN	COEN	OS[1:0]		OPOL	COS	DSM	S1H	A1H
							rw	rw	rw		rw	rw	rw	w	w

15	14	13	12	11	10	9	8	7	6	5	4	3	2	1	0
TSIE	WTIE	ALRM1IE	ALRM0IE	TSEN	WTEN	ALRM1EN	ALRM0EN	Reserved	CS	BPSHAD	REFEN	TSEG	WTCS[2:0]		
rw	rw	rw	rw	rw	rw	rw	rw		rw	rw	rw	rw	rw		

Bits	Fields	Descriptions
31:25	Reserved	Must be kept at reset value.
24	ITSEN	Internal timestamp event enable 0: Disable Internal timestamp event

		1: Enable Internal timestamp event
23	COEN	Calibration output enable 0: Disable calibration output 1: Enable calibration output
22:21	OS[1:0]	Output selection This bit is used for selecting flag source to output 0x0: Disable output RTC_ALARM 0x1: Enable alarm0 flag output 0x2: Enable alarm1 flag output 0x3: Enable wakeup flag output
20	OPOL	Output polarity This bit is used to invert output RTC_ALARM 0: Disable invert output RTC_ALARM 1: Enable invert output RTC_ALARM
19	COS	Calibration output selection Valid only when COEN=1 and prescalers are at default values 0: Calibration output is 512 Hz 1: Calibration output is 1Hz
18	DSM	Daylight saving mark This bit is flexible used by software. Often can be used to recording the daylight saving hour adjustment.
17	S1H	Subtract 1 hour(winter time change) One hour will be subtracted from current time if it is not 0 0: No effect 1: 1 hour will be subtracted at next second change time.
16	A1H	Add 1 hour(summer time change) One hour will be added from current time 0: No effect 1: 1 hour will be added at next second change time
15	TSIE	Time-stamp interrupt enable 0: Disable time-stamp interrupt 1: Enable time-stamp interrupt
14	WTIE	Auto-wakeup timer interrupt enable 0: Disable auto-wakeup timer interrupt 1: Enable auto-wakeup timer interrupt
13	ALRM1IE	RTC alarm-1 interrupt enable 0: Disable alarm interrupt 1: Enable alarm interrupt

12	ALRM0IE	RTC alarm-0 interrupt enable 0: Disable alarm interrupt 1: Enable alarm interrupt
11	TSEN	Time-stamp function enable 0: Disable time-stamp function 1: Enable time-stamp function
10	WTEN	Auto-wakeup timer function enable 0: Disable function 1: Enable function
9	ALRM1EN	Alarm-1 function enable 0: Disable alarm function 1: Enable alarm function
8	ALRM0EN	Alarm-0 function enable 0: Disable alarm function 1: Enable alarm function
7	Reserved	Must be kept at reset value.
6	CS	Clock System 0: 24-hour format 1: 12-hour format Note: Can only be written in initialization state
5	BPSHAD	Shadow registers bypass control 0: Reading calendar from shadow registers 1: Reading calendar from current real-time calendar Note: If frequency of APB clock is less than seven times the frequency of RTCCLK, this bit must set to 1.
4	REFEN	Reference clock detection function enable 0: Disable reference clock detection function 1: Enable reference clock detection function Note: Can only be written in initialization state and FACTOR_S must be 0x00FF
3	TSEG	Valid event edge of time-stamp 0: rising edge is valid event edge for time-stamp event 1: falling edge is valid event edge for time-stamp event
2:0	WTCS[2:0]	Auto-wakeup timer clock selection 0x0:RTC Clock divided by 16 0x1:RTC Clock divided by 8 0x2:RTC Clock divided by 4 0x3:RTC Clock divided by 2 0x4:0x5: ck_spre (default 1Hz) clock

0x6:0x7: ck_spre (default 1Hz) clock and 2^{16} is added to wake-up counter.

23.4.4. Status register (RTC_STAT)

Address offset: 0x0C

System reset: Only INITM, INITF and RSYNF bits are set to 0. Others are not affected

Backup domain reset value: 0x0000 0007

This register is writing protected except RTC_STAT[13:8].

This register has to be accessed by word (32-bit)

31	30	29	28	27	26	25	24	23	22	21	20	19	18	17	16
Reserved														ITSF	SCPF
														rc_w0	r

15	14	13	12	11	10	9	8	7	6	5	4	3	2	1	0
TP1F	Reserved	TP0F	TSOVRF	TSF	WTF	ALRM1F	ALRM0F	INITM	INITF	RSYNF	YCM	SOPF	WTWF	ALRM1WF	ALRM0WF
rc_w0		rc_w0	rc_w0	rc_w0	rc_w0	rc_w0	rc_w0	rw	r	rc_w0	r	r	r	r	r

Bits	Fields	Descriptions
31:18	Reserved	Must be kept at reset value.
17	ITSF	Internal timestamp flag Set by hardware when internal time-stamp event is detected. Cleared by software writing 0, and must be cleared together with TSF bit by writing 0 in both bits.
16	SCPF	Smooth calibration pending flag Set to 1 by hardware when software writes to RTC_HRFC without entering initialization mode and set to 0 by hardware when smooth calibration configuration is taken into account.
15	TP1F	RTC_TAMP1 detected flag Set to 1 by hardware when tamper detection is found on tamper1 input pin. Software can clear this bit by writing 0 into this bit.
14	Reserved	Must be kept at reset value.
13	TP0F	RTC_TAMP0 detected flag Set to 1 by hardware when tamper detection is found on tamper0 input pin. Software can clear this bit by writing 0 into this bit.
12	TSOVRF	Time-stamp overflow flag This bit is set by hardware when a time-stamp event is detected if TSF bit is set before. Cleared by software writing 0.
11	TSF	Time-stamp flag Set by hardware when time-stamp event is detected. Cleared by software writing 0.

10	WTF	Wakeup timer flag Set by hardware when wakeup timer decreased to 0. Cleared by software writing 0. This flag must be cleared at least 1.5 RTC Clock periods before WTF is set to 1 again.
9	ALRM1F	Alarm-1 occurs flag Set to 1 by hardware when current time/date matches the time/date of alarm 1 setting value. Cleared by software writing 0.
8	ALRM0F	Alarm-0 occurs flag Set to 1 by hardware when current time/date matches the time/date of alarm 0 setting value. Cleared by software writing 0.
7	INITM	Enter initialization mode 0: Free running mode 1: Enter initialization mode for setting calendar time/date and prescaler. Counter will stop under this mode.
6	INITF	Initialization state flag Set to 1 by hardware and calendar register and prescaler can be programmed in this state. 0: Calendar registers and prescaler register cannot be changed 1: Calendar registers and prescaler register can be changed
5	RSYNF	Register synchronization flag Set to 1 by hardware every 2 RTCCLK which will copy current calendar time/date into shadow register. Initialization mode (INITM), shift operation pending flag (SOPF) or bypass mode (BPSHAD) will clear this bit. This bit is also can be cleared by software writing 0. 0:Shadow register are not yet synchronized 1:Shadow register are synchronized
4	YCM	Year configuration mark Set by hardware if the year field of calendar date register is not the default value 0. 0: Calendar has not been initialized 1: Calendar has been initialized
3	SOPF	Shift function operation pending flag 0: No shift operation is pending 1: Shift function operation is pending
2	WTWF	Wakeup timer write enable flag 0: Wakeup timer update is not allowed

		1: Wakeup timer update is allowed
1	ALRM1WF	Alarm 1 configuration can be write flag Set by hardware if alarm register can be wrote after ALRM1EN bit has reset. 0: Alarm registers programming is not allowed 1: Alarm registers programming is allowed
0	ALRM0WF	Alarm 0 configuration can be write flag Set by hardware if alarm register can be wrote after ALRM0EN bit has reset. 0: Alarm registers programming is not allowed. 1: Alarm registers programming is allowed.

23.4.5. Prescaler register (RTC_PSC)

Address offset: 0x10

System reset: not effected

Backup domain reset value: 0x007F 00FF

This register is write protected and can only be written in initialization state

This register has to be accessed by word (32-bit)

31	30	29	28	27	26	25	24	23	22	21	20	19	18	17	16
Reserved									FACTOR_A[6:0]						
												rw			

15	14	13	12	11	10	9	8	7	6	5	4	3	2	1	0
Reserved	FACTOR_S[14:0]														
	rw														

Bits	Fields	Descriptions
31:23	Reserved	Must be kept at reset value.
22:16	FACTOR_A[6:0]	Asynchronous prescaler factor ck_apre frequency = RTCCLK frequency/(FACTOR_A+1)
15	Reserved	Must be kept at reset value.
14:0	FACTOR_S[14:0]	Synchronous prescaler factor ck_spre frequency = ck_apre frequency/(FACTOR_S+1)

23.4.6. Wakeup timer register (RTC_WUT)

Address offset: 0x14

System reset: not effected

Backup domain reset value: 0x0000 FFFF

This register is writing protected.

This register has to be accessed by word (32-bit)

31	30	29	28	27	26	25	24	23	22	21	20	19	18	17	16
Reserved															

15	14	13	12	11	10	9	8	7	6	5	4	3	2	1	0
WTRV[15:0]															
rw															

Bits	Fields	Descriptions
31:16	Reserved	Must be kept at reset value.
15:0	WTRV[15:0]	Auto-wakeup timer reloads value. Every (WTRV[15:0]+1) ck_wut period the WTF bit is set after WTEN=1.The ck_wut is selected by WTCS[2:0] bits. Note: This configure case is forbidden: WTRV=0x0000 with WTCS[2:0]=0b011. This register can be written only when WTWF=1.

23.4.7. Alarm 0 time and date register (RTC_ALRM0TD)

Address offset: 0x1C

System reset: not effect

Backup domain reset value: 0x0000 0000

This register is write protected and can only be written in initialization state

This register has to be accessed by word (32-bit)

31	30	29	28	27	26	25	24	23	22	21	20	19	18	17	16
MSKD	DOWS	DAYT[1:0]		DAYU[3:0]				MSKH	PM	HRT[1:0]		HRU[3:0]			
rw	rw	rw		rw				rw	rw	rw		rw			

15	14	13	12	11	10	9	8	7	6	5	4	3	2	1	0
MSKM	MNT[2:0]			MNU[3:0]				MSKS	SCT[2:0]			SCU[3:0]			
rw	rw			rw				rw	rw			rw			

Bits	Fields	Descriptions
31	MSKD	Alarm date mask bit 0: Not mask date/day field 1: Mask date/day field
30	DOWS	Day of the week selected 0: DAYU[3:0] indicates the date units 1: DAYU[3:0] indicates the week day and DAYT[1:0] has no means.
29:28	DAYT[1:0]	Date tens in BCD code
27:24	DAYU[3:0]	Date units or week day in BCD code
23	MSKH	Alarm hour mask bit 0: Not mask hour field 1: Mask hour field
22	PM	AM/PM flag 0: AM or 24-hour format

		1: PM
21:20	HRT[1:0]	Hour tens in BCD code
19:16	HRU[3:0]	Hour units in BCD code
15	MSKM	Alarm minutes mask bit 0: Not mask minutes field 1: Mask minutes field
14:12	MNT[2:0]	Minutes tens in BCD code
11:8	MNU[3:0]	Minutes units in BCD code
7	MSKS	Alarm second mask bit 0: Not mask second field 1: Mask second field
6:4	SCT[2:0]	Second tens in BCD code
3:0	SCU[3:0]	Second units in BCD code

23.4.8. Alarm 1 time and date register (RTC_ALRM1TD)

Address offset: 0x20

System reset: not effect

Backup domain reset value: 0x0000 0000

This register is write protected and can only be written in initialization state

This register has to be accessed by word (32-bit)

31	30	29	28	27	26	25	24	23	22	21	20	19	18	17	16
MSKD	DOWS	DAYT[1:0]		DAYU[3:0]				MSKH	PM	HRT[1:0]		HRU[3:0]			
rw	rw	rw		rw				rw	rw	rw		rw			

15	14	13	12	11	10	9	8	7	6	5	4	3	2	1	0
MSKM	MNT[2:0]			MNU[3:0]				MSKS	SCT[2:0]			SCU[3:0]			
rw	rw			rw				rw	rw			rw			

Bits	Fields	Descriptions
31	MSKD	Alarm date mask bit 0: Not mask date/day field 1: Mask date/day field
30	DOWS	Day of the week selected 0: DAYU[3:0] indicates the date units 1: DAYU[3:0] indicates the week day and DAYT[3:0] has no means.
29:28	DAYT[1:0]	Day tens in BCD code
27:24	DAYU[3:0]	Day units or week day in BCD code
23	MSKH	Alarm hour mask bit

		0: Not mask hour field 1: Mask hour field
22	PM	AM/PM flag 0: AM or 24-hour format 1: PM
21:20	HRT[1:0]	Hour tens in BCD code
19:16	HRU[3:0]	Hour units in BCD code
15	MSKM	Alarm minutes mask bit 0: Not mask minutes field 1: Mask minutes field
14:12	MNT[2:0]	Minutes tens in BCD code
11:8	MNU[3:0]	Minutes units in BCD code
7	MSKS	Alarm second mask bit 0: Not mask second field 1: Mask second field
6:4	SCT[2:0]	Second tens in BCD code
3:0	SCU[3:0]	Second units in BCD code

23.4.9. Write protection key register (RTC_WPK)

Address offset: 0x24

Reset value: 0x0000 0000

This register has to be accessed by word (32-bit)

31	30	29	28	27	26	25	24	23	22	21	20	19	18	17	16
Reserved															

15	14	13	12	11	10	9	8	7	6	5	4	3	2	1	0
Reserved								WPK[7:0]							
											w				

Bits	Fields	Descriptions
31:8	Reserved	Must be kept at reset value.
7:0	WPK[7:0]	Key for write protection

23.4.10. Sub second register (RTC_SS)

Address offset: 0x28

System reset value: 0x0000 0000 when BPSHAD = 0.

Not affected when BPSHAD = 1.

This register has to be accessed by word (32-bit)

31	30	29	28	27	26	25	24	23	22	21	20	19	18	17	16
Reserved															

15	14	13	12	11	10	9	8	7	6	5	4	3	2	1	0
SSC[15:0]															
r															

Bits	Fields	Descriptions
31:16	Reserved	Must be kept at reset value.
15:0	SSC[15:0]	Sub second value This value is the counter value of synchronous prescaler. Second fraction value is calculated by the below formula: Second fraction = (FACTOR_S - SSC) / (FACTOR_S + 1)

23.4.11. Shift function control register (RTC_SHIFTCTL)

Address offset: 0x2C

System reset: not effect

Backup Reset value: 0x0000 0000

This register is writing protected and can only be wrote when SOPF=0

This register has to be accessed by word (32-bit)

31	30	29	28	27	26	25	24	23	22	21	20	19	18	17	16
A1S	Reserved														
w															

15	14	13	12	11	10	9	8	7	6	5	4	3	2	1	0
Reserved	SFS[14:0]														
	w														

Bits	Fields	Descriptions
31	A1S	One second add 0: Not add 1 second 1: Add 1 second to the clock/calendar. This bit is jointly used with SFS field to add a fraction of a second to the clock.
30:15	Reserved	Must be kept at reset value.
14:0	SFS[14:0]	Subtract a fraction of a second The value of this bit will add to the counter of synchronous prescaler. When only using SFS, the clock will delay because the synchronous prescaler is a down counter: Delay (seconds) = SFS / (FACTOR_S + 1) When jointly using A1S and SFS, the clock will advance: Advance (seconds) = (1 - (SFS / (FACTOR_S + 1)))

Note: Writing to this register will cause RSYNF bit to be cleared.

23.4.12. Time of time stamp register (RTC_TTS)

Address offset: 0x30

Backup domain reset value: 0x0000 0000

System reset: no effect

This register will record the calendar time when TSF is set to 1.

Reset TSF bit will also clear this register.

This register has to be accessed by word (32-bit)

31	30	29	28	27	26	25	24	23	22	21	20	19	18	17	16
Reserved									PM	HRT[1:0]		HRU[3:0]			
									r	r		r			

15	14	13	12	11	10	9	8	7	6	5	4	3	2	1	0
Reserved	MNT[2:0]			MNU[3:0]				Reserved	SCT[2:0]			SCU[3:0]			
	r			r					r			r			

Bits	Fields	Descriptions
31:23	Reserved	Must be kept at reset value.
22	PM	AM/PM mark 0:AM or 24-hour format 1:PM
21:20	HRT[1:0]	Hour tens in BCD code
19:16	HRU[3:0]	Hour units in BCD code
15	Reserved	Must be kept at reset value.
14:12	MNT[2:0]	Minute tens in BCD code
11:8	MNU[3:0]	Minute units in BCD code
7	Reserved	Must be kept at reset value.
6:4	SCT[2:0]	Second tens in BCD code
3:0	SCU[3:0]	Second units in BCD code

23.4.13. Date of time stamp register (RTC_DTS)

Address offset: 0x34

Backup domain reset value: 0x0000 0000

System reset: no effect

This register will record the calendar date when TSF is set to 1.

Reset TSF bit will also clear this register.

This register has to be accessed by word (32-bit)

31	30	29	28	27	26	25	24	23	22	21	20	19	18	17	16
Reserved															

15	14	13	12	11	10	9	8	7	6	5	4	3	2	1	0
DOW[2:0]			MONT	MONU[3:0]				Reserved		DAYT[1:0]		DAYU[3:0]			
r			r	r						r		r			

Bits	Fields	Descriptions
31:16	Reserved	Must be kept at reset value.
15:13	DOW[2:0]	Days of the week
12	MONT	Month tens in BCD code
11:8	MONU[3:0]	Month units in BCD code
7:6	Reserved	Must be kept at reset value.
5:4	DAYT[1:0]	Day tens in BCD code
3:0	DAYU[3:0]	Day units in BCD code

23.4.14. Sub second of time stamp register (RTC_SSTS)

Address offset: 0x38

Backup domain reset: 0x0000 0000

System reset: no effect

This register will record the calendar date when TSF is set to 1.

Reset TSF bit will also clear this register.

This register has to be accessed by word (32-bit)

31	30	29	28	27	26	25	24	23	22	21	20	19	18	17	16
Reserved															

15	14	13	12	11	10	9	8	7	6	5	4	3	2	1	0
SSC[15:0]															
r															

Bits	Fields	Descriptions
31:16	Reserved	Must be kept at reset value.
15:0	SSC[15:0]	Sub second value This value is the counter value of synchronous prescaler when TSF is set to 1.

23.4.15. High resolution frequency compensation register (RTC_HRFC)

Address offset: 0x3C

Backup domain reset: 0x0000 0000

System Reset: no effect

This register is write protected.

This register has to be accessed by word (32-bit)

31	30	29	28	27	26	25	24	23	22	21	20	19	18	17	16
Reserved															

15	14	13	12	11	10	9	8	7	6	5	4	3	2	1	0
FREQI	CWND8	CWND16	Reserved				CMSK[8:0]								
rw	rw	rw									rw				

Bits	Fields	Descriptions
31:16	Reserved	Must be kept at reset value.
15	FREQI	Increase RTC frequency by 488.5PPM 0: No effect 1: One RTCCLK pulse is inserted every 2^{11} pulses. This bit should be used in conjunction with CMSK bit. If the input clock frequency is 32.768KHz, the number of RTCCLK pulses added during 32s calibration window is (512 * FREQI) - CMSK
14	CWND8	Frequency compensation window 8 second selected 0: No effect 1: Calibration window is 8 second Note: When CWND8=1, CMSK[1:0] are stuck at “00”.
13	CWND16	Frequency compensation window 16 second selected 0: No effect 1: Calibration window is 16 second Note: When CWND16=1, CMSK[0] are stuck at “0”.
12:9	Reserved	Must be kept at reset value.
8:0	CMSK[8:0]	Calibration mask number The number of mask pulse out of 2^{20} RTCCLK pulse. This feature will decrease the frequency of calendar with a resolution of 0.9537 PPM.

23.4.16. Tamper register (RTC_TAMP)

Address offset: 0x40

Backup domain reset: 0x0000 0000

System reset: no effect

This register has to be accessed by word (32-bit)

31	30	29	28	27	26	25	24	23	22	21	20	19	18	17	16
Reserved															

15	14	13	12	11	10	9	8	7	6	5	4	3	2	1	0
DISPU	PRCH[1:0]		FLT[1:0]		FREQ[2:0]			TPTS	TP1EG	TP1EN	Reserved		TPIE	TP0EG	TP0EN

rw rw rw rw rw rw rw rw rw rw

Bits	Fields	Descriptions
31:16	Reserved	Must be kept at reset value.
15	DISPU	RTC_TAMPx pull up disable bit 0: Enable inner pull-up before sampling for pre-charge RTC_TAMPx pin 1: Disable pre-charge duration
14:13	PRCH[1:0]	Pre-charge duration time of RTC_TAMPx This setting determines the pre-charge time before each sampling. 0x0: 1 RTC clock 0x1: 2 RTC clock 0x2: 4 RTC clock 0x3: 8 RTC clock
12:11	FLT[1:0]	RTC_TAMPx filter count setting This bit determines the tamper sampling type and the number of consecutive sample. 0x0: Detecting tamper event using edge mode. Pre-charge duration is disabled automatically 0x1: Detecting tamper event using level mode.2 consecutive valid level samples will make an effective tamper event 0x2: Detecting tamper event using level mode.4 consecutive valid level samples will make an effective tamper event 0x3: Detecting tamper event using level mode.8 consecutive valid level samples will make an effective tamper event
10:8	FREQ[2:0]	Sampling frequency of tamper event detection 0x0: Sample once every 32768 RTCCLK(1Hz if RTCCLK=32.768KHz) 0x1: Sample once every 16384 RTCCLK(2Hz if RTCCLK=32.768KHz) 0x2: Sample once every 8192 RTCCLK(4Hz if RTCCLK=32.768KHz) 0x3: Sample once every 4096 RTCCLK(8Hz if RTCCLK=32.768KHz) 0x4: Sample once every 2048 RTCCLK(16Hz if RTCCLK=32.768KHz) 0x5: Sample once every 1024 RTCCLK(32Hz if RTCCLK=32.768KHz) 0x6: Sample once every 512 RTCCLK(64Hz if RTCCLK=32.768KHz) 0x7: Sample once every 256 RTCCLK(128Hz if RTCCLK=32.768KHz)
7	TPTS	Make tamper function used for timestamp function 0:No effect 1:TSF is set when tamper event detected even TSEN=0
6	TP1EG	Tamper 1 event trigger edge If tamper detection is in edge mode(FLT =0): 0: Rising edge triggers a tamper detection event 1: Falling edge triggers a tamper detection event If tamper detection is in level mode(FLT !=0):

		0: Low level triggers a tamper detection event 1: High level triggers a tamper detection event
5	TP1EN	Tamper 1 detection enable 0:Disable tamper 1 detection function 1:Enable tamper 1 detection function
4:3	Reserved	Must be kept at reset value.
2	TPIE	Tamper detection interrupt enable 0: Disable tamper interrupt 1: Enable tamper interrupt
1	TP0EG	Tamper 0 event trigger edge If tamper detection is in edge mode(FLT =0): 0: Rising edge triggers a tamper detection event 1: Falling edge triggers a tamper detection event If tamper detection is in level mode(FLT !=0): 0: Low level triggers a tamper detection event 1: High level triggers a tamper detection event
0	TP0EN	Tamper 0 detection enable 0:Disable tamper 0 detection function 1:Enable tamper 0 detection function

Note: It's strongly recommended that reset the TPxEN before change the tamper configuration.

23.4.17. Alarm 0 sub second register (RTC_ALRM0SS)

Address offset: 0x44

Backup domain reset: 0x0000 0000

System reset: no effect

This register is write protected and can only be wrote when ALRM0EN=0 or INITM=1

This register has to be accessed by word (32-bit)

31	30	29	28	27	26	25	24	23	22	21	20	19	18	17	16
Reserved				MSKSSC[3:0]				Reserved							
					rw										

15	14	13	12	11	10	9	8	7	6	5	4	3	2	1	0
Reserved	SSC[14:0]														
								rw							

Bits	Fields	Descriptions
31:28	Reserved	Must be kept at reset value.
27:24	MSKSSC[3:0]	Mask control bit of SSC 0x0: Mask alarm sub second setting. The alarm asserts at every second time point if all the rest alarm fields are matched. 0x1: SSC[0] is to be compared and all others are ignored

		0x2: SSC[1:0] is to be compared and all others are ignored 0x3: SSC[2:0] is to be compared and all others are ignored 0x4: SSC[3:0] is to be compared and all others are ignored 0x5: SSC[4:0] is to be compared and all others are ignored 0x6: SSC[5:0] is to be compared and all others are ignored 0x7: SSC[6:0] is to be compared and all others are ignored 0x8: SSC[7:0] is to be compared and all others are ignored 0x9: SSC[8:0] is to be compared and all others are ignored 0xA: SSC[9:0] is to be compared and all others are ignored 0xB: SSC[10:0] is to be compared and all others are ignored 0xC: SSC[11:0] is to be compared and all others are ignored 0xD: SSC[12:0] is to be compared and all others are ignored 0xE: SSC[13:0] is to be compared and all others are ignored 0xF: SSC[14:0] is to be compared and all others are ignored **Note**: The bit 15 of synchronous counter (SSC[15] in RTC_SS) is never compared.
23:15	Reserved	Must be kept at reset value.
14:0	SSC[14:0]	Alarm sub second value This value is the alarm sub second value which is to be compared with synchronous prescaler counter SSC. Bit number is controlled by MSKSSC bits.

23.4.18. Alarm 1 sub second register (RTC_ALRM1SS)

Address offset: 0x48

Backup domain reset: 0x0000 0000

System reset: no effect

This register is write protected and can only be wrote when ALRM1EN=0 or INITM=1

This register has to be accessed by word (32-bit)

31	30	29	28	27	26	25	24	23	22	21	20	19	18	17	16
Reserved				MSKSSC[3:0]				Reserved							
				rw											

15	14	13	12	11	10	9	8	7	6	5	4	3	2	1	0
Reserved	SSC[14:0]														
	rw														

Bits	Fields	Descriptions
31:28	Reserved	Must be kept at reset value.
27:24	MSKSSC[3:0]	Mask control bit of SSC 0x0: Mask alarm sub second setting. The alarm asserts at every second time point if all the rest alarm fields are matched. 0x1: SSC[0] is to be compared and all others are ignored 0x2: SSC[1:0] is to be compared and all others are ignored 0x3: SSC[2:0] is to be compared and all others are ignored

		0x4: SSC[3:0] is to be compared and all others are ignored 0x5: SSC[4:0] is to be compared and all others are ignored 0x6: SSC[5:0] is to be compared and all others are ignored 0x7: SSC[6:0] is to be compared and all others are ignored 0x8: SSC[7:0] is to be compared and all others are ignored 0x9: SSC[8:0] is to be compared and all others are ignored 0xA: SSC[9:0] is to be compared and all others are ignored 0xB: SSC[10:0] is to be compared and all others are ignored 0xC: SSC[11:0] is to be compared and all others are ignored 0xD: SSC[12:0] is to be compared and all others are ignored 0xE: SSC[13:0] is to be compared and all others are ignored 0xF: SSC[14:0] is to be compared and all others are ignored Note: The bit 15 of synchronous counter (SSC[15] in RTC_SS) is never compared.
23:15	Reserved	Must be kept at reset value.
14:0	SSC[14:0]	Alarm sub second value This value is the alarm sub second value which is to be compared with synchronous prescaler counter SSC. Bit number is controlled by MSKSSC bits.

23.4.19. Configuration register (RTC_CFG)

Address offset: 0x4C

Backup domain reset: 0x0000 0000

System reset: no effect

This register has to be accessed by word (32-bit)

31	30	29	28	27	26	25	24	23	22	21	20	19	18	17	16
Reserved															

15	14	13	12	11	10	9	8	7	6	5	4	3	2	1	0
Reserved														OUT2EN	ALRMOUT TYPE
														rw	rw

Bits	Fields	Descriptions
31:2	Reserved	Must be kept at reset value.
1	OUT2EN	RTC_OUT pin select 0:RTC_OUT is output on PC13 1: RTC_OUT is output on PB2
0	ALRMOUTTYPE	RTC_ALARM Output Type 0: Open-drain output type 1: Push-pull output type

23.4.20. Backup registers (RTC_BKPx) (x=0..31)

Address offset: 0x50~0xCC

Backup domain reset: 0x0000 0000

System reset: no effect

This register has to be accessed by word (32-bit)

31	30	29	28	27	26	25	24	23	22	21	20	19	18	17	16
DATA[31:16]															
rw															

15	14	13	12	11	10	9	8	7	6	5	4	3	2	1	0
DATA[15:0]															
rw															

Bits	Fields	Descriptions
31:0	DATA[31:0]	Data These registers can be wrote or read by software. The content remains valid even in power saving mode because they can powered-on by VBAT. Tamper detection flag TPxF assertion will reset these registers.

24. TIMER (TIMERx)

Table 24-1. Timers (TIMERx) are divided into five sorts

TIMER		TIMER0/7	TIMER1/2/3/4/22/23/30/31	TIMER14/40/41/42/43/44	TIMER15/16	TIMER5/6/50/51
TYPE		Advanced	General-L0	General-L3	General-L4	Basic
Prescaler		16-bit	16-bit	16-bit	16-bit	16-bit
Counter		16-bit	16-bit(TIMER2/3/30/31) 32-bit(TIMER1/4/22/23)	16-bit	16-bit	32-bit (TIMER5/6) 64-bit(TIMER50/51)
Count mode		UP, DOWN, Center-aligned	UP, DOWN, Center-aligned	UP ONLY	UP ONLY	UP ONLY
Repetition		●	×	●	●	×
Channel Capture/ Compare		8	4	3	2	0
Composite PWM mode		●	●	●	×	×
Output match pulse select		●	●	●	×	×
Complementary & Dead-time		●	×	●	●	×
Break function	BREAK0	●	×	●	●	×
	BREAK1	●	×	×	×	×
Locked break function		●	×	●	●	×
Single Pulse		●	●	●	●	●
Delayable single pulse		●	●	●	×	×
Quadrature decoder		●	●	×	×	×
Non-quadrature Decoder		●	●	×	×	×

TIMER	TIMER0/7	TIMER1/2/3/4/22/23/30/31	TIMER14/40/41/42/43/44	TIMER15/16	TIMER5/6/50/51
Master-slave management	●	●	●	×	×
Inter Connection	● (1)	● (2)	● (3)	×	TRGO TO DAC
DMA	●	●	●	●	● (4)
Debug Mode	●	●	●	●	●

	TIMERx	ITI0	ITI1	ITI2	ITI3	ITI4	ITI5	ITI6	ITI7	ITI8	ITI9	ITI10	ITI11	ITI12	ITI13	ITI14
(1)	TIMER0	TIMER14_TRGO0	TIMER1_TRGO0	TIMER2_TRGO0	TIMER3_TRGO0	-	-	-	-	-	-	-	-	TIMER22_TRGO0	TIMER23_TRGO0	from TRIGSEL
	TIMER7	TIMER0_TRGO0	TIMER1_TRGO0	TIMER3_TRGO0	TIMER4_TRGO0	-	-	-	-	-	-	-	-	TIMER22_TRGO0	TIMER23_TRGO0	
(2)	TIMER1	TIMER0_TRGO0	TIMER7_TRGO0	TIMER2_TRGO0	TIMER3_TRGO0	ETH_PPS	USB0OTG_HS_SOF	-	-	-	-	-	-	TIMER22_TRGO0	TIMER23_TRGO0	
	TIMER2	TIMER0_TRGO0	TIMER1_TRGO0	TIMER14_TRGO0	TIMER3_TRGO0	ETH_PPS	-	-	-	-	-	-	-	TIMER22_TRGO0	TIMER23_TRGO0	
	TIMER3	TIMER0_TRGO0	TIMER1_TRGO0	TIMER2_TRGO0	TIMER7_TRGO0	-	-	-	-	-	-	-	-	TIMER22_TRGO0	TIMER23_TRGO0	
	TIMER4	TIMER0_TRGO0	TIMER7_TRGO0	TIMER2_TRGO0	TIMER3_TRGO0	-	-		USB1OTG_HS_SOF	-	-	-	-	TIMER22_TRGO0	TIMER23_TRGO0	
	TIMER22	TIMER0_TRGO0	TIMER1_TRGO0	TIMER2_TRGO0	TIMER3_TRGO0	TIMER4_TRGO0	TIMER7_TRGO0	-	-	-	TIMER14_TRGO0	TIMER15_CH0	TIMER16_CH0	-	TIMER23_TRGO0	
	TIMER23	TIMER0_TRGO0	TIMER1_TRGO0	TIMER2_TRGO0	TIMER3_TRGO0	TIMER4_TRGO0	TIMER7_TRGO0	-	-	-	TIMER14_TRGO0	TIMER15_CH0	TIMER16_CH0	TIMER22_TRGO0	-	
	TIMER30	TIMER0_TRGO0	TIMER1_TRGO0	TIMER14_TRGO0	TIMER3_TRGO0	ETH1_PPS	USB1OTG_HS_SOF	-	-	-	-	-	-	TIMER22_TRGO0	TIMER23_TRGO0	
	TIMER31	TIMER0_TRGO0	TIMER1_TRGO0	TIMER14_TRGO0	TIMER3_TRGO0	ETH1_PPS	-	-	-	-	-	-	-	TIMER22_TRGO0	TIMER23_TRGO0	
(3)	TIMER14	TIMER0_TRGO0	TIMER2_TRGO0	TIMER15_CH0	TIMER16_CH0	-	-	-	-	-	-	-	-	-	-	
	TIMER40	TIMER0_TRGO0	TIMER2_TRGO0	TIMER15_CH0	TIMER16_CH0	-	-	-	-	-	-	-	-	-	-	
	TIMER41	TIMER0_TRGO0	TIMER2_TRGO0	TIMER15_CH0	TIMER16_CH0	-	-	-	-	-	-	-	-	-	-	
	TIMER42	TIMER0_TRGO0	TIMER2_TRGO0	TIMER15_CH0	TIMER16_CH0	-	-	-	-	-	-	-	-	-	-	
	TIMER43	TIMER0_TRGO0	TIMER2_TRGO0	TIMER15_CH0	TIMER16_CH0	-	-	-	-	-	-	-	-	-	-	

	TIMERx	ITI0	ITI1	ITI2	ITI3	ITI4	ITI5	ITI6	ITI7	ITI8	ITI9	ITI10	ITI11	ITI12	ITI13	ITI14
	TIMER44	TIMER0_ TRGO0	TIMER2_ TRGO0	TIMER15 _CH0	TIMER16 _CH0	-	-	-	-	-	-	-	-	-	-	
(4)	Only update events will generate a DMA request. TIMER5/6/50/51 do not have DMAS bit (DMA request source selection).															

24.1. Advanced timer (TIMERx, x=0, 7)

24.1.1. Overview

The advanced timer module (TIMER0/7) is an eight-channel timer that supports both input capture and output compare. They can generate PWM signals to control motor or be used for power management applications. The advanced timer has a 16-bit counter that can be used as an unsigned counter.

In addition, the advanced timers can be programmed and be used for counting, their external events can be used to drive other timers.

Timer also includes a dead-time insertion module which is suitable for motor control applications.

Timers are completely independent with each other, but they may be synchronized to provide a larger timer with their counter value increasing in unison.

24.1.2. Characteristics

- Total channel num: 8.
- Counter width: 16 bits.
- Selectable clock source: internal clock, internal trigger, external input, external trigger.
- Multiple counter modes: up counting, down counting and center-aligned counting.
- Quadrature decoder: used for motion tracking and determination of both rotation direction and position.
- Hall sensor function: used for 3-phase motor control.
- Programmable prescaler: 16 bits. The factor can be changed ongoing.
- Each channel is independent and user-configurable: input capture mode, output compare mode, programmable PWM mode, single pulse mode and trigger out.
- Programmable dead time insertion and separated dead time insertion.
- Auto reload function.
- Programmable counter repetition function.
- Break input function: BREAK0 and BREAK1.
- Interrupt output or DMA request: update event, trigger event, compare/capture event and break input.
- Daisy chaining of timer module allows a single timer to start multiple timers.
- Timer synchronization allows the selected timers to start counting on the same clock cycle.
- Timer master-slave management.

24.1.3. Block diagram

Figure 24-1. Advanced timer block diagram provides details of the internal configuration of the advanced timer, and *Table 24-2. Advanced timer channel description* introduces the input and output of the channels.

Figure 24-1. Advanced timer block diagram

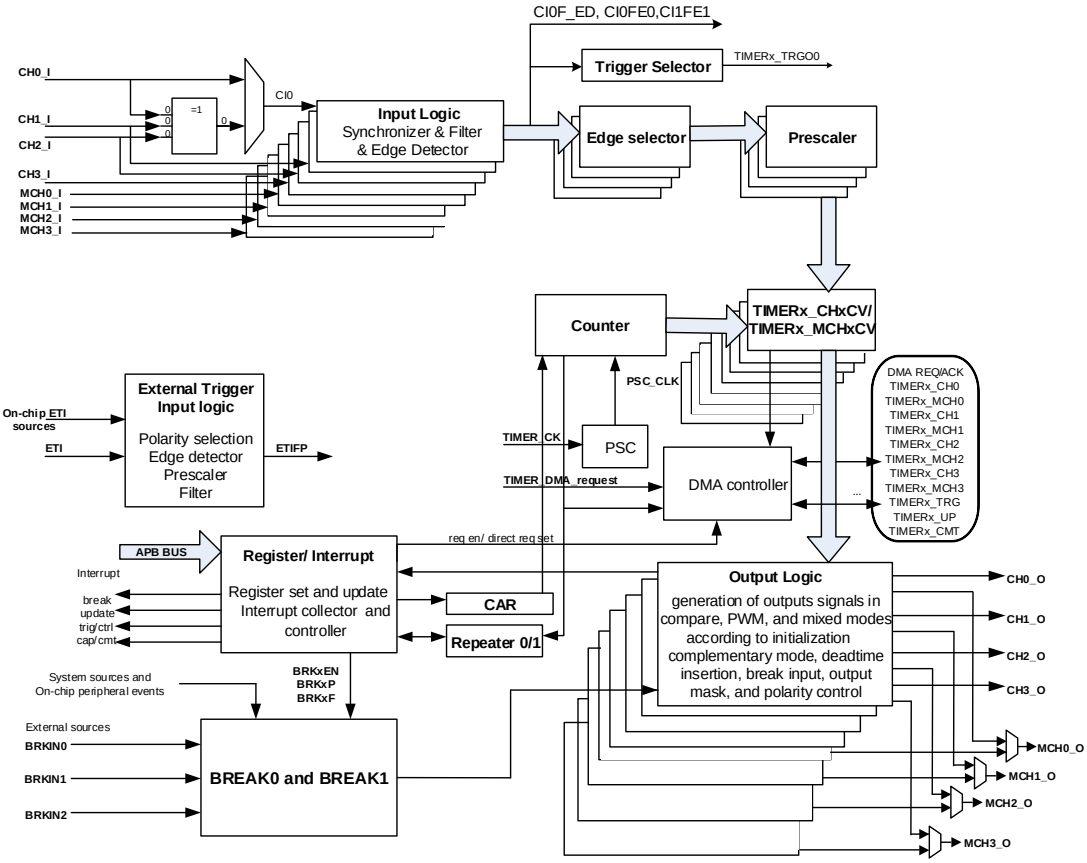

Table 24-2. Advanced timer channel description

Channel name (x=0..3)	MCHxMSEL[1:0]=00 independent mode	MCHxMSEL[1:0]=11 complementary mode
CHx (Channel x)	CHx and MCHx can independently input capture and compare output	only the CHx is valid for input, and the outputs of MCHx and CHx are complementary
MCHx (Multi mode channel x)		

24.1.4. Function overview

Clock selection

The clock source of the advanced timer can be either the CK_TIMER or an alternate clock source controlled by TSCFGy[4:0] (y=0...9,15) in SYSCFG_TIMERxCFG(x=0,7) registers.

- TSCFGy[4:0] (y=0..9,15) = 5’b00000 in SYSCFG_TIMERxCFG(x=0,7) registers. Internal

clock CK_TIMER is selected as timer clock source which is from module RCU.

The default clock source is the CK_TIMER for driving the counter prescaler when TSCFGy[4:0] (y=0..9,15) = 5'b00000 in SYSCFG_TIMERxCFG(x=0,7) registers. When the CEN is set, the CK_TIMER will be divided by PSC value to generate PSC_CLK.

In this mode, the TIMER_CK which drives counter's prescaler to count is equal to CK_TIMER which is from RCU module.

If TSCFGy[4:0] (y=0..2,6,8,9) in SYSCFG_TIMERxCFG(x=0,7) registers are setting to a nonzero value, the prescaler is clocked by other clock sources selected in the TSCFGy[4:0] (y=0..2,6,8,9) bit-filed, more details will be introduced later. When the TSCFGy[4:0] (y=3,4,5,7) are setting to a nonzero value, the internal clock TIMER_CK is the counter prescaler driving clock source.

Figure 24-2. Normal mode, internal clock divided by 1

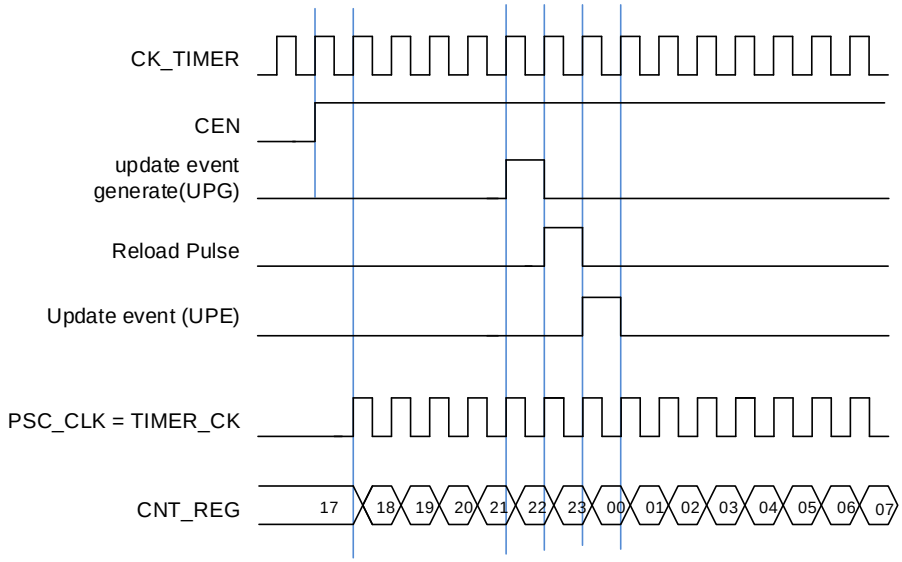

- TSCFG6[4:0] are setting to a nonzero value (external clock mode 0). External input pin is selected as timer clock source.

The TIMER_CK, which drives counter's prescaler to count, can be triggered by the event of rising or falling edge on the external pin TIMERx_CHn/ TIMERx_MCHn(n=0...3). This mode can be selected by setting TSCFG6[4:0] to 0x5~0x7 and 0x9~0xE.

And, the counter prescaler can also be driven by rising edge on the internal trigger input pin ITI0/1/2/3/12/13/14. This mode can be selected by setting TSCFG6[4:0] to 0x1~0x4, 0x11, 0x12 or 0x13.

- SMC1= 1'b1 (external clock mode 1). External input ETI is selected as timer clock source.

The TIMER_CK, which drives counter's prescaler to count, can be triggered by the event of rising or falling edge on the external pin ETI. This mode can be selected by setting the SMC1 bit in the TIMERx_SMCFG register to 1. The other way to select the ETI signal as the clock

source is setting the TSCFG6[4:0] to 0x8. Note that the ETI signal is derived from the ETI pin sampled by a digital filter. When the ETI signal is selected as the clock source, the trigger controller including the edge detection circuitry will generate a clock pulse on each ETI signal rising edge to clock the counter prescaler.

Note: The ETI signal can be input from an external ETI pin or provide by on-chip peripherals, please refer to ***Trigger selection for TIMER0_ETI register (TRIGSEL_TIMER0ETI)*** for more details.

Clock prescaler

The prescaler can divide the timer clock (TIMER_CK) to a counter clock (PSC_CLK) by any factor ranging from 1 to 65536. It is controlled by prescaler register (TIMERx_PSC) which can be changed ongoing, but it is adopted at the next update event.

Figure 24-3. Counter timing diagram with prescaler division change from 1 to 2

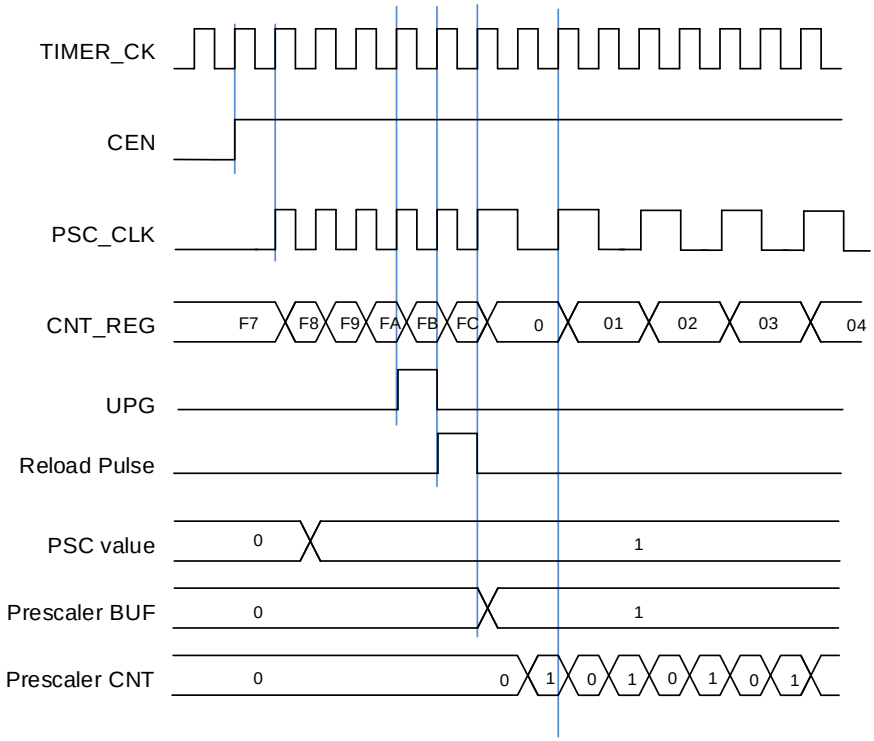

Up counting mode

In this mode, the counter counts up continuously from 0 to the counter reload value, which is defined in the TIMERx_CAR register, in a count-up direction. Once the counter reaches the counter reload value, the counter restarts from 0. If the repetition counter is set, the update event will be generated after (TIMERx_CREP0/1+1) times of overflow. Otherwise the update event is generated each time when counter overflows. The counting direction bit DIR in the TIMERx_CTL0 register should be set to 0 for the up-counting mode.

Whenever, if the update event software trigger is enabled by setting the UPG bit in the

TIMERx_SWEVG register, the counter value will be initialized to 0 and an update event will be generated.

If the UPDIS bit in TIMERx_CTL0 register is set, the update event is disabled.

When an update event occurs, all the registers (repetition counter register, auto reload register, prescaler register) are updated.

Figure 24-4. Timing diagram of up counting mode, PSC=0/2 and ***Figure 24-5. Timing diagram of up counting mode, change TIMERx_CAR ongoing*** show some examples of the counter behavior for different clock prescaler factors when TIMERx_CAR=0x99.

Figure 24-4. Timing diagram of up counting mode, PSC=0/2

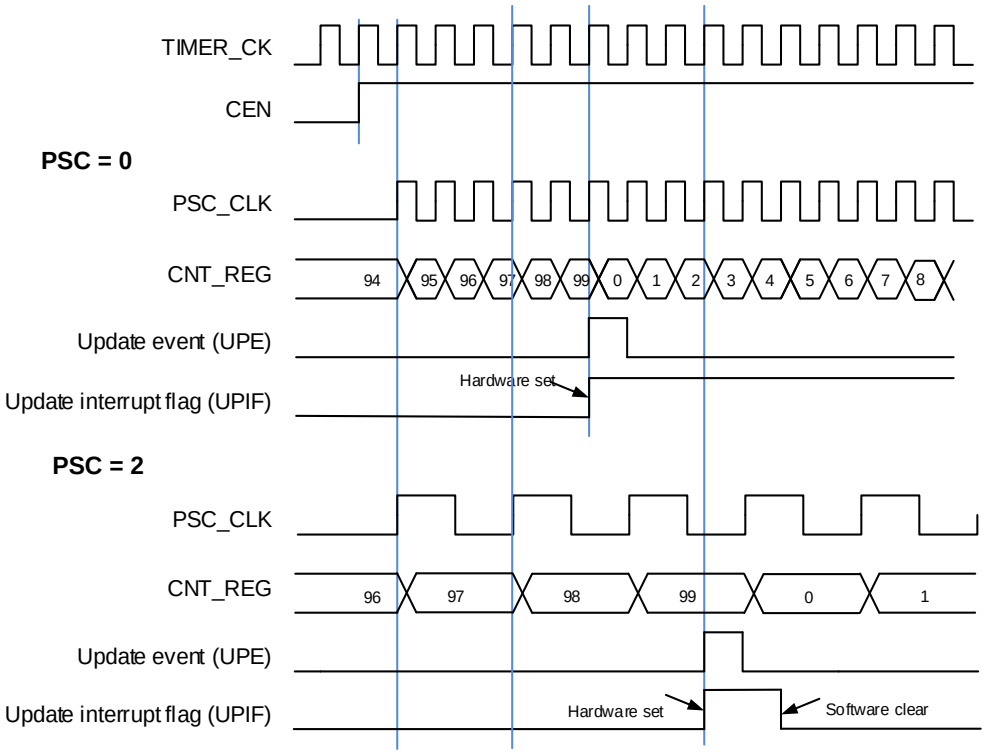

Figure 24-5. Timing diagram of up counting mode, change TIMERx_CAR ongoing

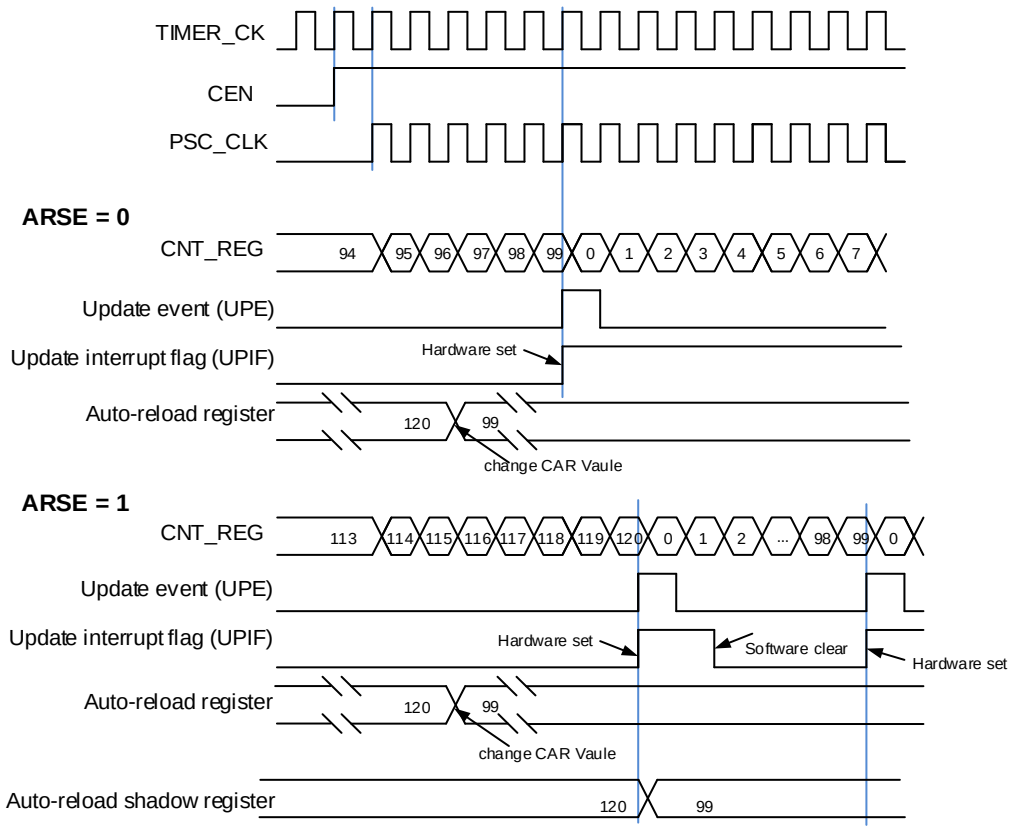

Down counting mode

In this mode, the counter counts down continuously from the counter reload value, which is defined in the TIMERx_CAR register, in a count-down direction. Once the counter reaches 0, the counter restarts to count again from the counter reload value. If the repetition counter is set, the update event will be generated after (TIMERx_CREP0/1+1) times of underflow. Otherwise, the update event is generated each time when counter underflows. The counting direction bit DIR in the TIMERx_CTL0 register should be set to 1 for the down counting mode.

When the update event is set by the UPG bit in the TIMERx_SWEVG register, the counter value will be initialized to the counter reload value and an update event will be generated.

If the UPDIS bit in TIMERx_CTL0 register is set, the update event is disabled.

When an update event occurs, all the registers (repetition counter register, auto reload register, prescaler register) are updated.

Figure 24-6. Timing diagram of down counting mode, PSC=0/2 and ***Figure 24-7. Timing diagram of down counting mode, change TIMERx_CAR ongoing*** show some examples of the counter behavior in different clock frequencies when TIMERx_CAR = 0x99.

Figure 24-6. Timing diagram of down counting mode, PSC=0/2

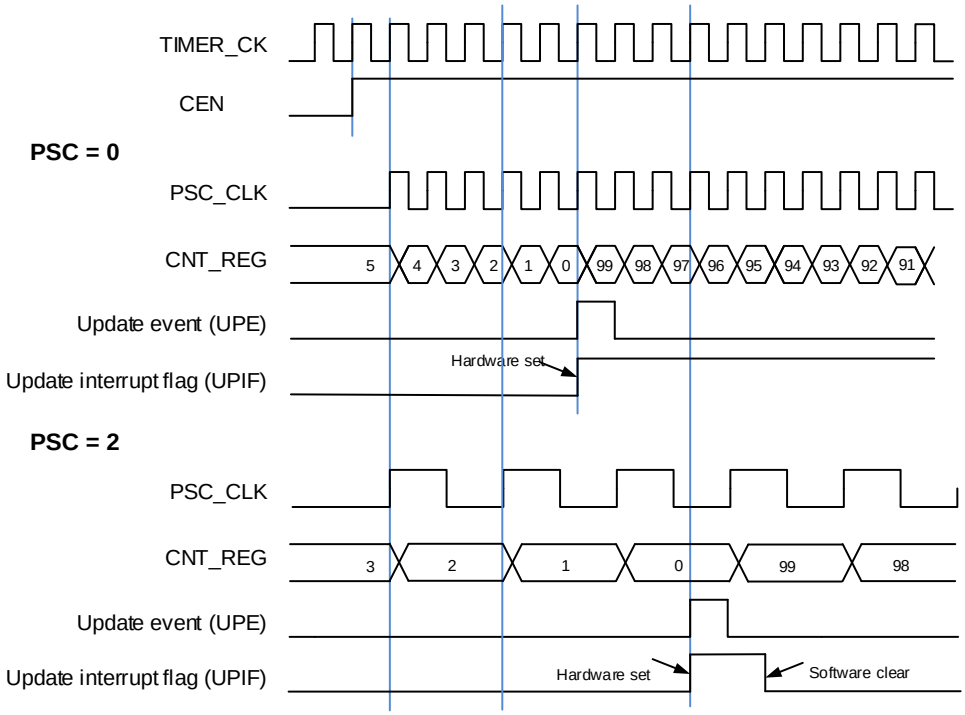

Figure 24-7. Timing diagram of down counting mode, change TIMERx_CAR ongoing

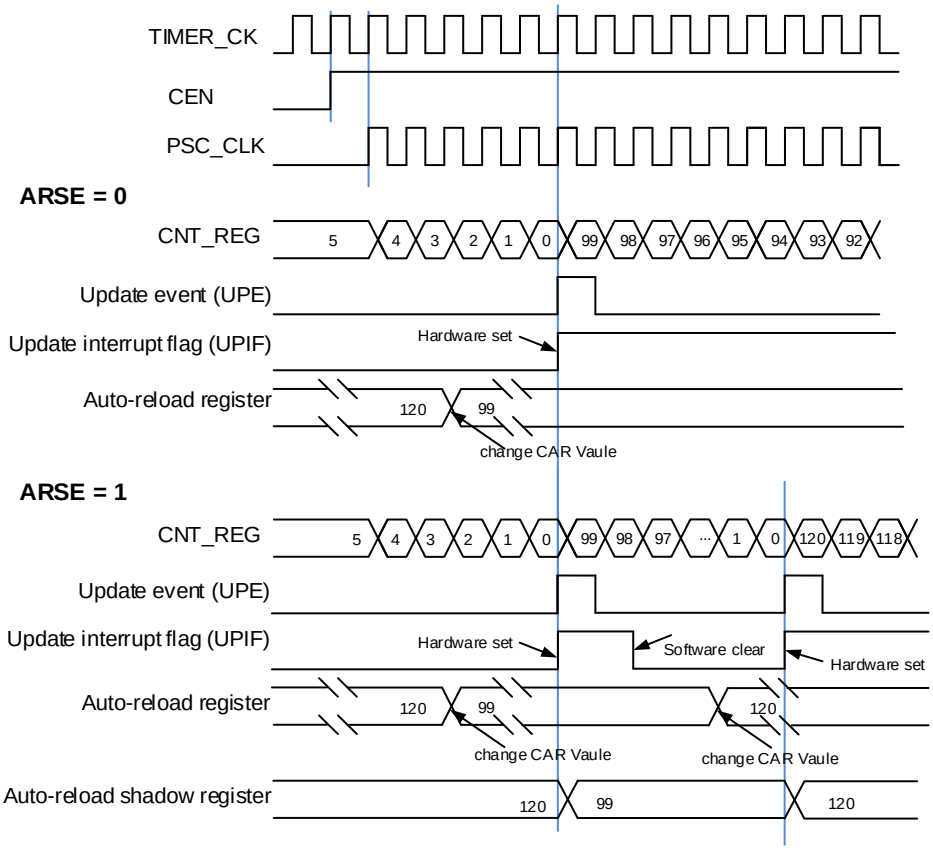

Center-aligned counting mode

In the center-aligned counting mode, the counter counts up from 0 to the counter reload value and then counts down to 0 alternatively. The timer module generates an overflow event when the counter counts to (TIMERx_CAR-1) in the count-up direction and generates an underflow event when the counter counts to 1 in the count-down direction. The counting direction bit DIR in the TIMERx_CTL0 register is read-only and indicates the counting direction when in the center-aligned counting mode. The counting direction is updated by hardware automatically.

Setting the UPG bit in the TIMERx_SWEVG register will initialize the counter value to 0 and generate an update event irrespective of whether the counter is counting up or down in the center-aligned counting mode.

The UPIF bit in the TIMERx_INTF register will be set to 1 either when an underflow event or an overflow event occurs. While the CHxIF bit is associated with the value of CAM[1:0] in TIMERx_CTL0. The details refer to ***Figure 24-8. Timing diagram of center-aligned counting mode***.

If the UPDIS bit in the TIMERx_CTL0 register is set, the update event is disabled.

When an update event occurs, all the registers (repetition counter register, auto-reload register, prescaler register) are updated.

Figure 24-8. Timing diagram of center-aligned counting mode shows some examples of the counter behavior when TIMERx_CAR=0x99. TIMERx_PSC=0x0.

Figure 24-8. Timing diagram of center-aligned counting mode

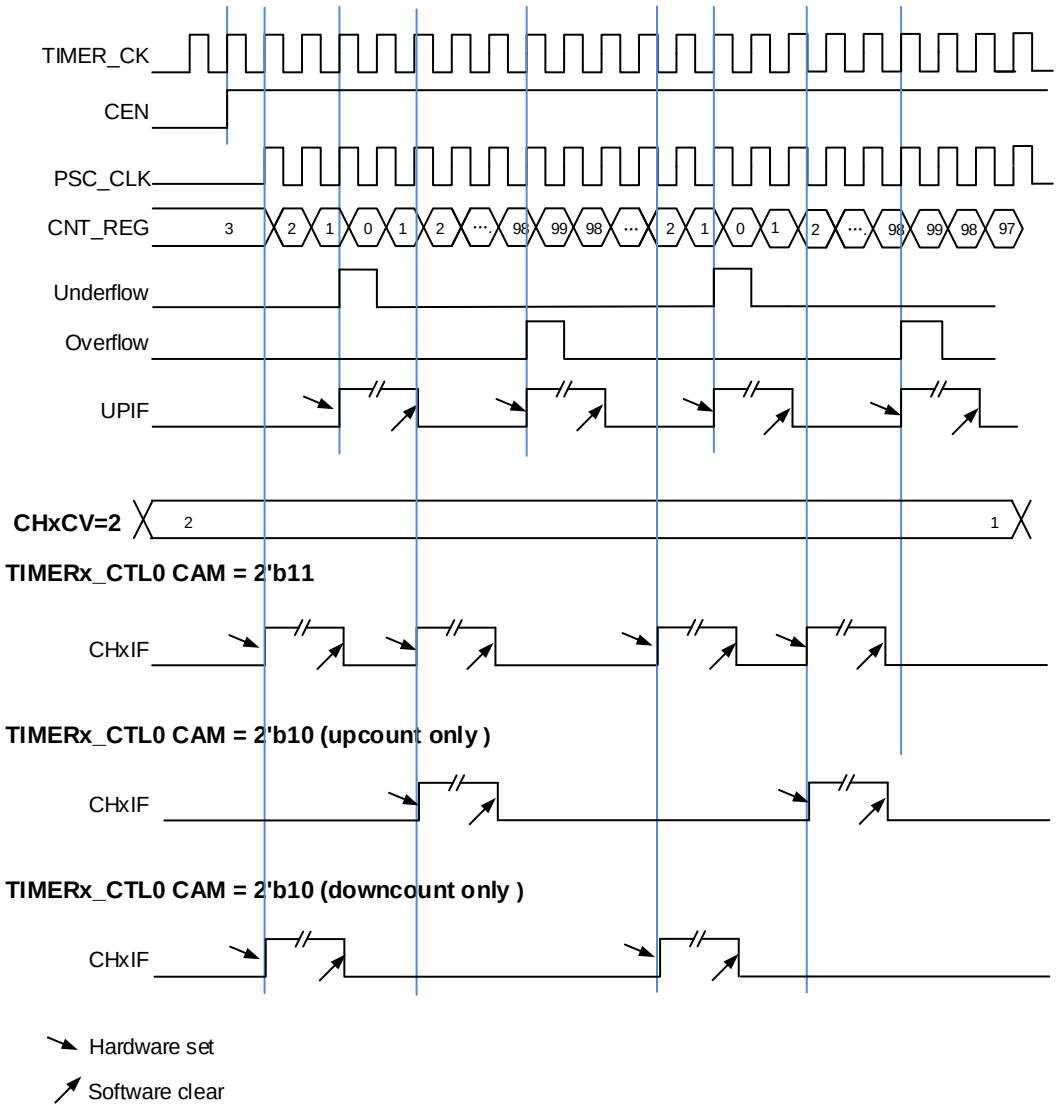

Counter repetition

The advance timer has two repetitions counter TIMERx_CREP0/1, which can be selected by configuring the CPERSEL bit in the TIMERx_CFG register. The CPEP[7:0] bit-field is 8bits, the CPEP[31:0] bit-field is 32bits and can be read on the fly.

Repetition counter is used to generate the update event or update the timer registers only after a given number (N+1) cycles of the counter, where N is the value of CREP0/1 bit in TIMERx_CREP0/1 register. The repetition counter is decremented at each counter overflow in up counting mode, at each counter underflow in down counting mode or at each counter overflow and at each counter underflow in center-aligned counting mode.

Setting the UPG bit in the TIMERx_SWEVG register will reload the content of CREP0/1 in TIMERx_CREP0/1 register and generate an update event.

The new written CREP0/1 value will not take effect until the next update event. When the

value of CREP0/1 is odd, and the counter is counting in center-aligned mode, the update event is generated (on overflow or underflow) depending on when the written CREP0/1 value takes effect. If an update event is generated by software after writing an odd number to CREP0/1, the update events will be generated on the underflow. If the next update event occurs on overflow after writing an odd number to CREP0/1, then the subsequent update events will be generated on the overflow.

Figure 24-9. Repetition counter timing diagram of center-aligned counting mode

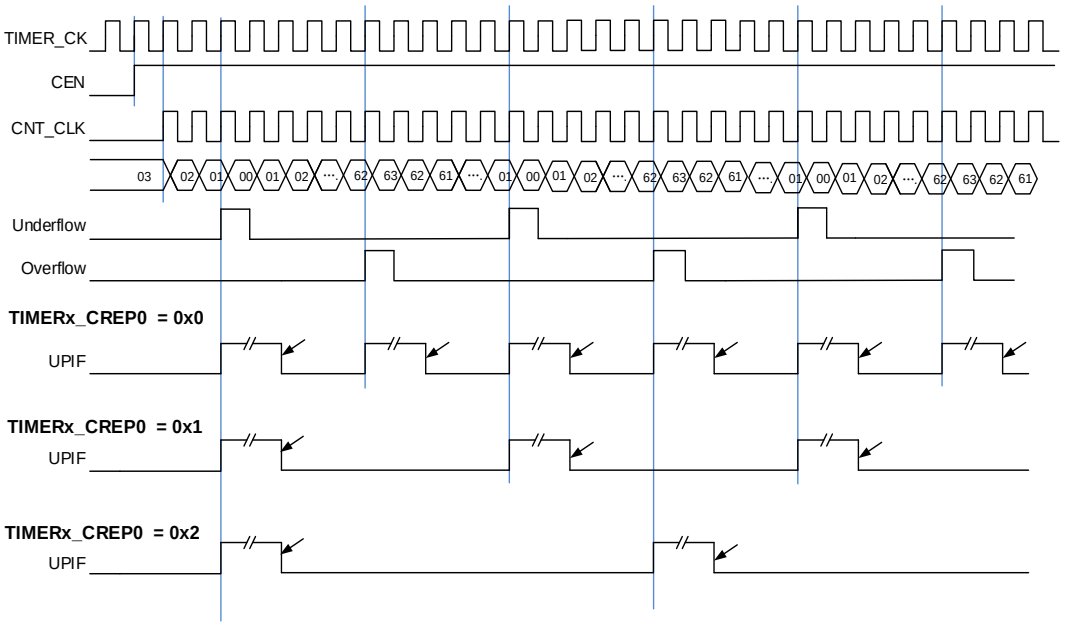

Figure 24-10. Repetition counter timing diagram of up counting mode

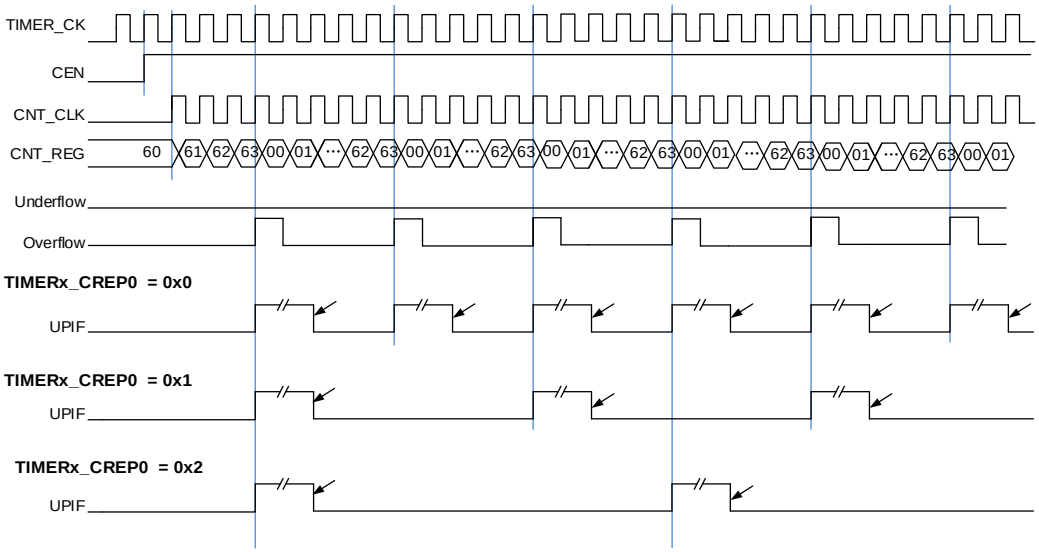

Figure 24-11. Repetition counter timing diagram of down counting mode

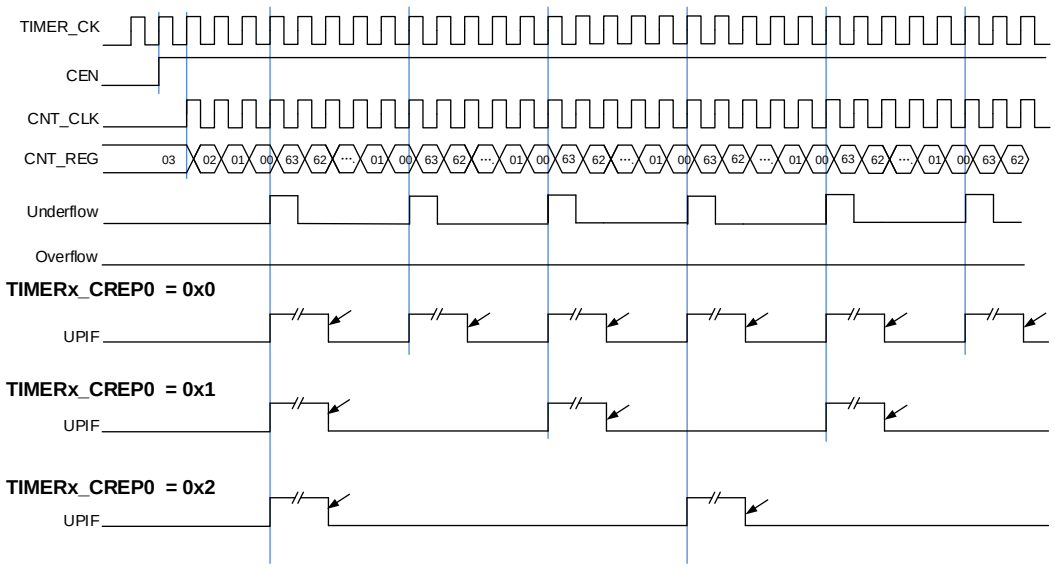

Capture/compare channels

The advanced timer has eight independent channels which can be used as capture inputs or compare outputs. Each channel is built around a channel capture compare register including an input stage, a channel controller and an output stage.

When the channels are used for input, channel x and multi mode channel x can perform input capture independently; when the channels are used for comparison output, the channel x and multi mode channel x can output independent and complementary outputs.

- **Input capture mode**

When MCHxMSEL=2’b00(independent mode), channel x and multi mode channel x can perform input capture independently.

Input capture mode allows the channel to perform measurements such as pulse timing, frequency, period, duty cycle and so on. The input stage consists of a digital filter, a channel polarity selection, edge detection and a channel prescaler. When a selected edge occurs on the channel input, the current value of the counter is captured into the TIMERx_CHxCV/ TIMERx_MCHxCV(x=0...3) registers, at the same time the CHxIF/ MCHxIF (x=0..3) bits are set and the channel interrupt is generated if it is enabled when CHxIE/ MCHxIE =1(x=0..3).

Figure 24-12. Input capture logic for channel 0

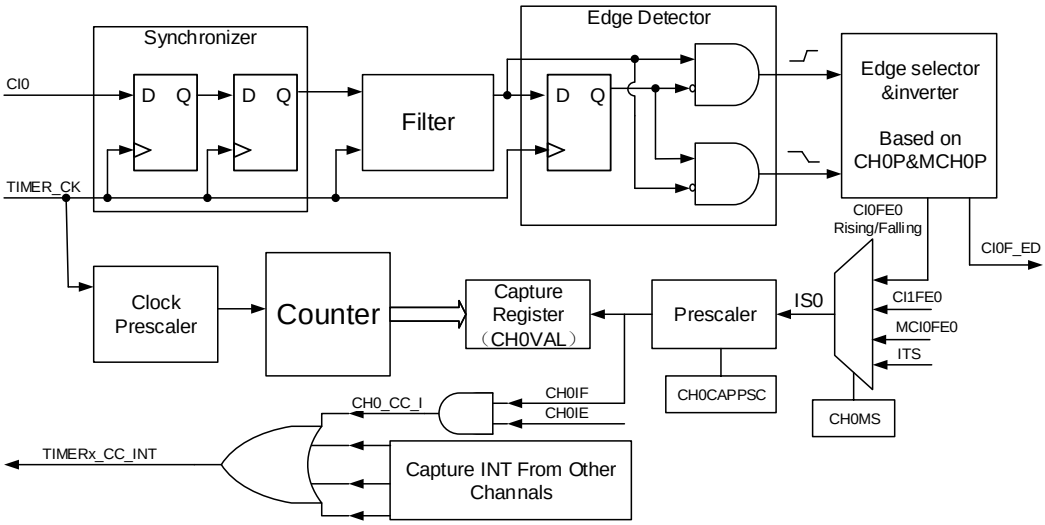

Figure 24-13. Input capture logic for multi mode channel 0

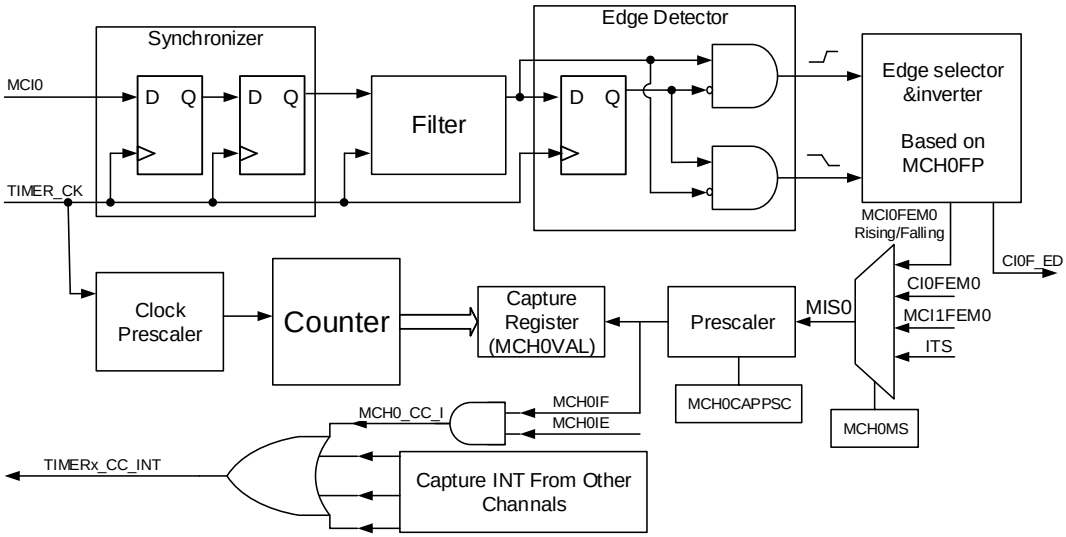

The input signals of channelx (CIx/ MCIx) can be the TIMERx_CHx/ TIMERx_MCHxCV signal or the XOR signal of the TIMERx_CH0, TIMERx_CH1 and TIMERx_CH2 signals (just for CI0).

First, the input signal of channel (CIx/ MCIx) is synchronized to TIMER_CK signal, and then sampled by a digital filter to generate a filtered input signal. Then through the edge detector, the rising or falling edge is detected by configuring CHxP/ MCHxP or MCHxFP bits. The input capture signal can also be selected from the input signal of other channel or the internal trigger signal by configuring CHxMS/ MCHxMS bits. The IC prescaler makes several input events generate one effective capture event. On the capture event, TIMERx_CHxCV/ TIMERx_MCHxCV will store the value of counter.

So, the process can be divided into several steps as below:

Step1: Filter configuration (CHxCAPFLT bit in TIMERx_CHCTL0 register and MCHxCAPFLT bit in TIMERx_MCHCTL0 register).

Based on the input signal and quality of requested signal, configure compatible CHxCAPFLT or MCHxCAPFLT bit.

Step2: Edge selection (CHxP and MCHxP bits in TIMERx_CHCTL2 register, MCHxFP[1:0] bits in TIMERx_MCHCTL2 register).

Rising edge or falling edge, choose one by configuring CHxP and MCHxP bits or MCHxFP[1:0] bits.

Step3: Capture source selection (CHxMS bit in TIMERx_CHCTL0 register, MCHxMS bit in TIMERx_MCHCTL0 register).

As soon as selecting one input capture source by CHxMS, the channel must be set to input mode (CHxMS! =0x000 or MCHxMS!=0x000) and TIMERx_CHxCV/ TIMERx_MCHxCV cannot be written any more.

Step4: Interrupt enable (CHxIE and CHxDEN bits, MCHxIE and MCHxDEN bits in TIMERx_DMAINTEN).

Enable the related interrupt to get the interrupt and DMA request.

Step5: Capture enable (CHxEN and MCHxEN bits in TIMERx_CHCTL2).

Result: When the wanted input signal is captured, TIMERx_CHxCV/ TIMERx_MCHxCV will be set by counter's value and CHxIF/ MCHxIF bit is asserted. If the CHxIF/ MCHxIF bit is 1, the CHxOF/ MCHxOF bit will also be asserted. The interrupt and DMA request will be asserted or not based on the configuration of CHxIE and CHxDEN bits, MCHxIE and MCHxDEN bits in TIMERx_DMAINTEN.

Direct generation: A DMA request or interrupt is generated by setting CHxG directly.

The input capture mode can be also used for pulse width measurement from signals on the TIMERx_CHx and TIMERx_MCHx pins. For example, PWM signal connects to CI0 input. Select CI0 as channel 0 capture signals by setting CH0MS to 3'b001 in the channel control register (TIMERx_CHCTL0) and set capture on rising edge. Select CI0 as channel 1 capture signal by setting CH1MS to 3'b010 in the channel control register (TIMERx_CHCTL0) and set capture on falling edge. The counter is set to restart mode and is restarted on channel 0 rising edge. Then the TIMERX_CH0CV can measure the PWM period and the TIMERx_CH1CV can measure the PWM duty cycle.

■ Output compare mode

Figure 24-14. Output compare logic (when MCHxMSEL = 2'00, x=0, 1, 2, 3) and ***Figure 24-15. Output compare logic (when MCHxMSEL = 2'11, x=0,1,2,3)*** show the logic circuit of output compare mode.

Figure 24-14. Output compare logic (when MCHxMSEL = 2'00, x=0, 1, 2, 3)

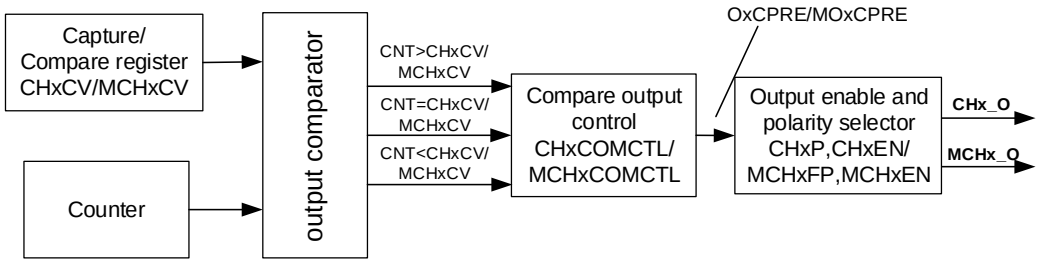

Figure 24-15. Output compare logic (when MCHxMSEL = 2'11, x=0,1,2,3)

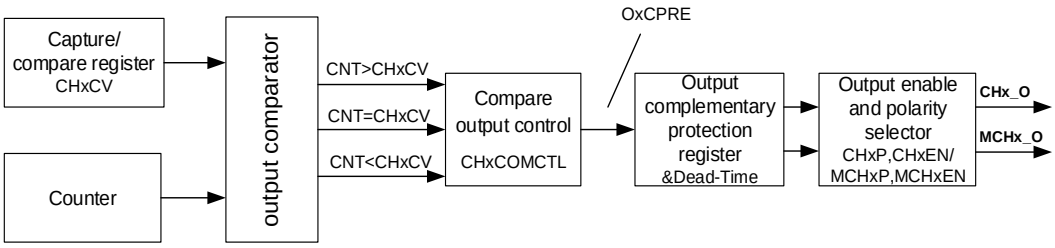

The relationship between the channel output signal CHx_O/MCHx_O and the OxCPRE/ MOxCPRE signal (more details refer to ***Channel output prepare signal***) is described as blew(the active level of OxCPRE is high and the active level of MOxCPRE is high).

- When MCHxMSEL=2'b00 (in TIMERx_CTL2 register), the MCHx_O output is independent from the CHx_O output. The output level of CHx_O depends on OxCPRE signal, CHxP bit and CHxEN bit (please refer to the TIMERx_CHCTL2 register for more details). The output level of MCHx_O depends on MOxCPRE signal, MCHxFP[1:0] bits and MCHxEN bit (please refer to the TIMERx_MCHCTL2 and TIMERx_CHCTL2 registers for more details). Please refer to ***Figure 24-14. Output compare logic (when MCHxMSEL = 2'00, x=0, 1, 2, 3)***.
- When MCHxMSEL=2'b11, the MCHx_O output is the inverse of the CHx_O output. The output level of CHx_O/MCHx_O depends on OxCPRE signal, CHxP/ MCHxP bits and CHxEN/MCHxEN bits. Please refer to ***Figure 24-15. Output compare logic (when MCHxMSEL = 2'11, x=0,1,2,3)***.

For examples (the MCHx_O output is independent from the CHx_O output):

1) Configure CHxP=0 (the active level of CHx_O is high, the same as OxCPRE), CHxEN=1 (the output of CHx_O is enabled):
   If the output of OxCPRE is active(high) level, the output of CHx_O is active(high) level;
   If the output of OxCPRE is inactive(low) level, the output of CHx_O is active(low) level.

2) Configure MCHxP=1 (the active level of MCHx_O is low, contrary to MOxCPRE), MCHxEN=1 (the output of MCHx_O is enabled):

If the output of MOxCPRE is active(high) level, the output of MCHx_O is active(low) level; If the output of MOxCPRE is inactive(low) level, the output of MCHx_O is active(high) level.

When MCHxMSEL=2'b11 and CHx_O and MCHx_O are output at the same time, the specific outputs of CHx_O and MCHx_O are related to the relevant bits (ROS, IOS, POE and DTCFG bits) in the TIMERx_CCHP register. Please refer to ***Outputs Complementary*** for more details.

In output compare mode, the TIMERx can generate timed pulses with programmable position, polarity, duration and frequency. When the counter matches the value in the TIMERx_CHxCV/ TIMERx_MCHxCV register of an output compare channel, the channel (n) output can be set, cleared, or toggled based on CHxCOMCTL/ MCHxCOMCTL. When the counter reaches the value in the TIMERx_CHxCV/ TIMERx_MCHxCV register, the CHxIF/ MCHxIF bit will be set and the channel (n) interrupt is generated if CHxIE/ MCHxIE = 1. And the DMA request will be asserted, if CHxDEN/ MCHxDEN =1.

So, the process can be divided into several steps as below:

Step1: Clock Configuration. Such as clock source, clock prescaler and so on.

Step2: Compare mode configuration.

- Set the shadow enable mode by CHxCOMSEN/ MCHxCOMSEN.
- Set the output mode (set/clear/toggle) by CHxCOMCTL/ MCHxCOMCTL.
- Select the active polarity by CHxP/MCHxP/ MCHxFP.
- Enable the output by CHxEN/ MCHxEN.

Step3: Interrupt/DMA request enable configuration by CHxIE/ MCHxIE /CHxDEN/ MCHxDEN.

Step4: Compare output timing configuration by TIMERx_CAR and TIMERx_CHxCV/ TIMERx_MCHxCV.

The TIMERx_CHxCV/ TIMERx_MCHxCV can be changed ongoing to meet the expected waveform.

Step5: Start the counter by configuring CEN to 1.

Figure 24-16. Output-compare in three modes shows the three compare modes: toggle/set/clear. CARL=0x63, CHxVAL=0x3.

Figure 24-16. Output-compare in three modes

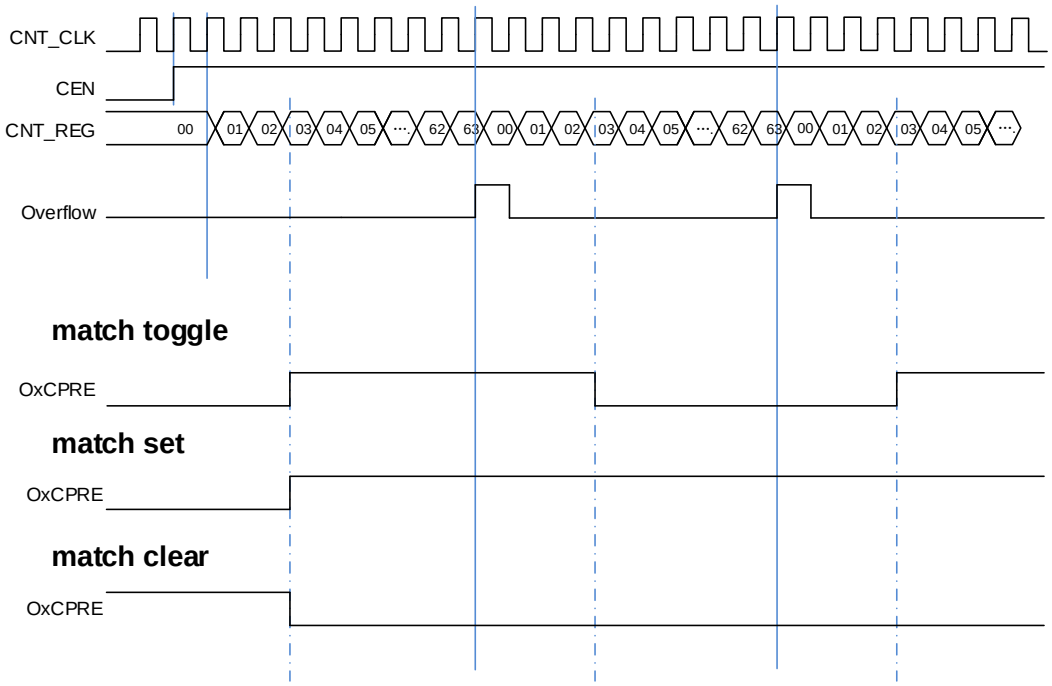

PWM mode

In the PWM output mode (by setting the CHxCOMCTL/ MCHxCOMCTL bit to 4'b0110 (PWM mode 0) or to 4'b0111(PWM mode 1)), the channel can generate PWM waveform according to the TIMERx_CAR registers and TIMERx_CHxCV/ TIMERx_MCHxCV registers.

Based on the counter mode, PWM can also be divided into EAPWM (Edge-aligned PWM) and CAPWM (Center-aligned PWM).

The EAPWM's period is determined by TIMERx_CAR and the duty cycle is determined by TIMERx_CHxCV/ TIMERx_MCHxCV. ***Figure 24-17. Timing diagram of EAPWM*** shows the EAPWM output and interrupts waveform.

The CAPWM's period is determined by 2*TIMERx_CAR, and the duty cycle is determined by 2*TIMERx_CHxCV/ TIMERx_MCHxCV. ***Figure 24-18. Timing diagram of CAPWM*** shows the CAPWM output and interrupts waveform.

In up counting mode, if the value of TIMERx_CHxCV/ TIMERx_MCHxCV is greater than the value of TIMERx_CAR, the output will be always active in PWM mode 0 (CHxCOMCTL/ MCHxCOMCTL =4'b0110). And if the value of TIMERx_CHxCV/ TIMERx_MCHxCV is greater than the value of TIMERx_CAR, the output will be always inactive in PWM mode 1 (CHxCOMCTL/ MCHxCOMCTL =4'b0111).

Figure 24-17. Timing diagram of EAPWM

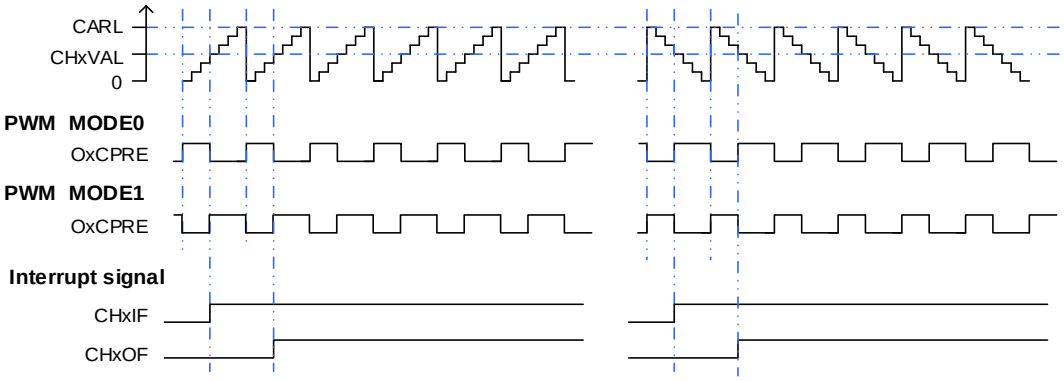

Figure 24-18. Timing diagram of CAPWM

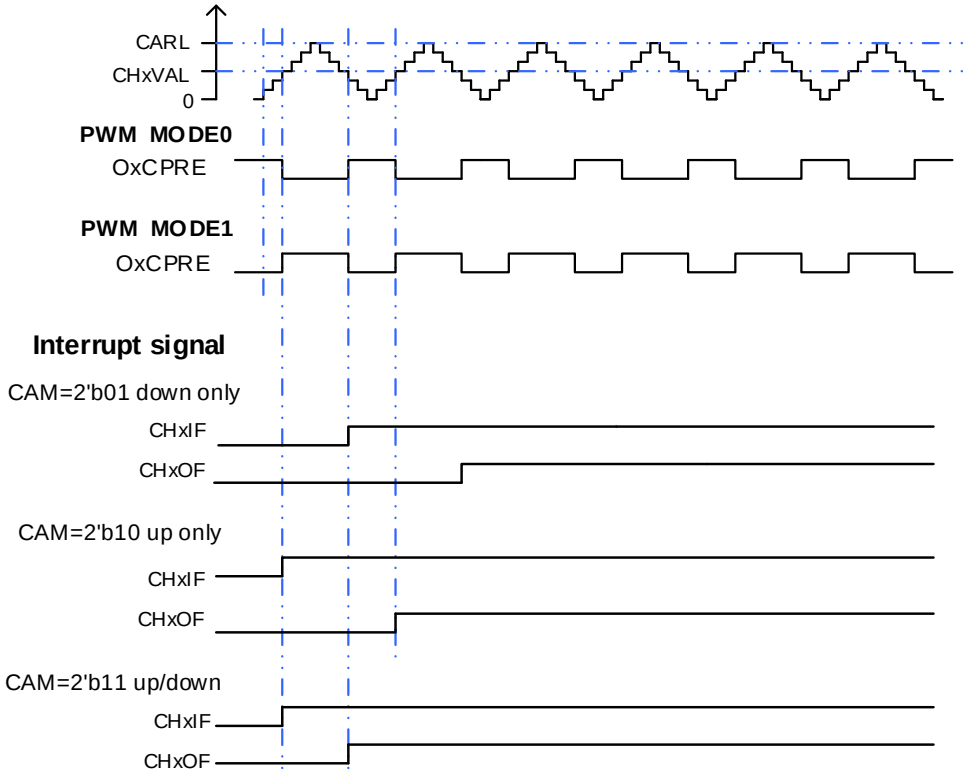

Composite PWM mode

In the Composite PWM mode (CHxCPWMEN = 1'b1, CHxMS[2:0] = 3'b000 and CHxCOMCTL = 4'b0110 or 4'b0111), the PWM signal output in channel x (x=0..3) is composited by CHxVAL and CHxCOMVAL_ADD bits.

If CHxCOMCTL = 4'b0110 (PWM mode 0) and DIR = 1'b0 (up counting mode), or CHxCOMCTL = 4'b0111 (PWM mode 1) and DIR = 1'b1 (Down counting mode), the channel x output is forced low when the counter matches the value of CHxVAL. It is forced high when the counter matches the value of CHxCOMVAL_ADD.

If CHxCOMCTL = 4'b0111 (PWM mode 1) and DIR = 1'b0 (up counting mode), or

CHxCOMCTL = 4'b0110 (PWM mode 0) and DIR = 1'b1 (down counting mode) the channel x output is forced high when the counter matches the value of CHxVAL. It is forced low when the counter matches the value of CHxCOMVAL_ADD.

The PWM period is determined by (CARL + 0x0001) and the PWM pulse width is determined by the following table.

Table 24-3.The Composite PWM pulse width

Condition	Mode	PWM pulse width
CHxVAL < CHxCOMVAL_ADD ≤ CARL	PWM mode 0	(CARL + 0x0001) + (CHxVAL – CHxCOMVAL_ADD)
	PWM mode 1	(CHxCOMVAL_ADD – CHxVAL)
CHxCOMVAL_ADD < CHxVAL ≤ CARL	PWM mode 0	(CHxVAL - CHxCOMVAL_ADD)
	PWM mode 1	(CARL + 0x0001) + (CHxCOMVAL_ADD – CHxVAL)
(CHxVAL = CHxCOMVAL_ADD ≤ CARL) or (CHxVAL > CARL > CHxCOMVAL_ADD)	PWM mode 0 (up counting) or PWM mode 1 (down counting)	100%
	PWM mode 0 (down counting) or PWM mode 1 (up counting)	0%
CHxCOMVAL_ADD > CARL > CHxVAL	PWM mode 0(up counting) or PWM mode 1(down counting)	0%
	PWM mode 0(down counting) or PWM mode 1(up counting)	100%
(CHxVAL>CARL) and (CHxCOMVAL_ADD > CARL)	-	The output of CHx_O is keeping

When the counter reaches the value of CHxVAL, the CHxIF bit is set and the channel x interrupt is generated if CHxIE = 1, and the DMA request will be asserted, if CHxDEN=1. When the counter reaches the value of CHxCOMVAL_ADD, the CHxCOMADDIF bit is set (this flag just used in composite PWM mode, when CHxCPWMEN=1) and the channel x additional compare interrupt is generated if CHxCOMADDIE = 1 (Only interrupt is generated, no DMA request is generated).

According to the relationship among CHxVAL, CHxCOMVAL_ADD and CARL, it can be divided into four situations:

1) CHxVAL < CHxCOMVAL_ADD, and the values of CHxVAL and CHxCOMVAL_ADD between 0 and CARL.

Figure 24-19. Channel x output PWM with (CHxVAL < CHxCOMVAL_ADD)

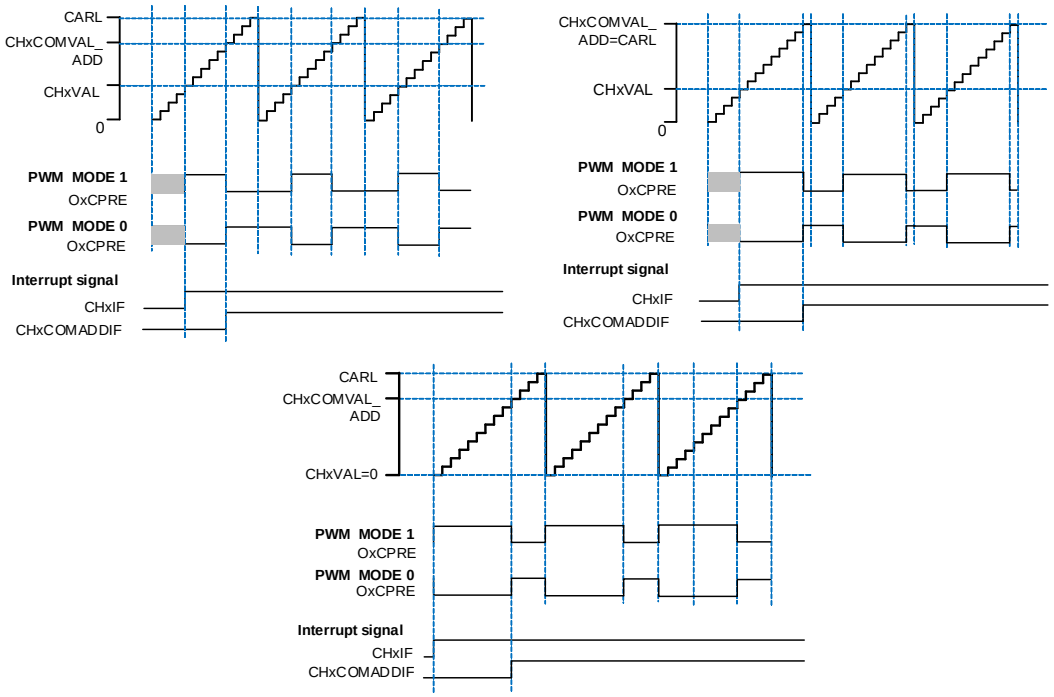

2) CHxVAL = CHxCOMVAL_ADD, and the value of CHxVAL and CHxCOMVAL_ADD between 0 and CARL.

Figure 24-20. Channel x output PWM with (CHxVAL = CHxCOMVAL_ADD)

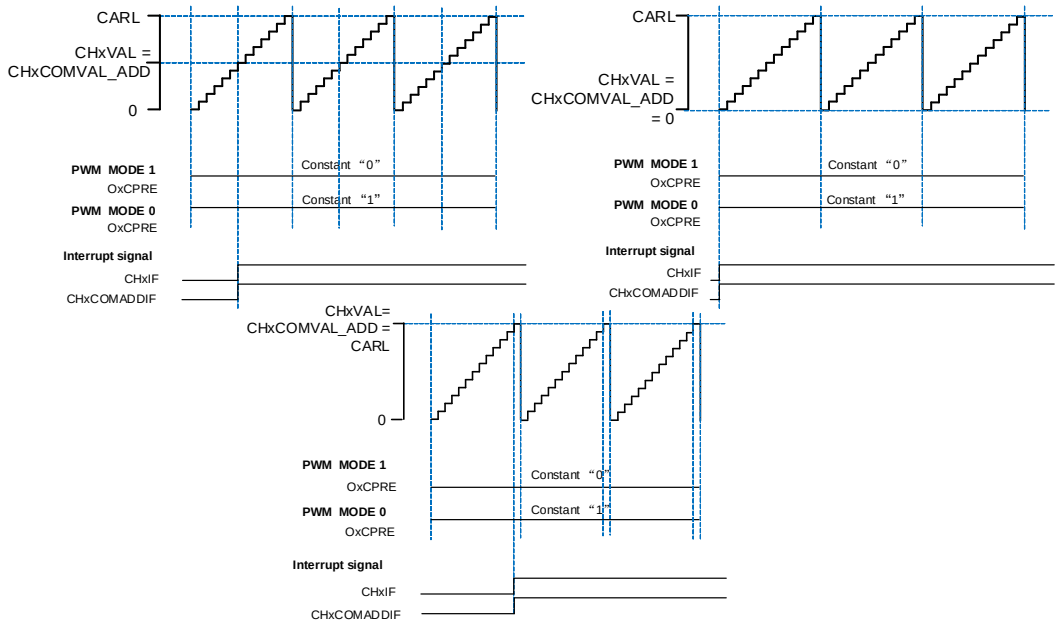

3) CHxVAL > CHxCOMVAL_ADD, and the value of CHxVAL and CHxCOMVAL_ADD between 0 and CARL.

Figure 24-21. Channel x output PWM with (CHxVAL > CHxCOMVAL_ADD)

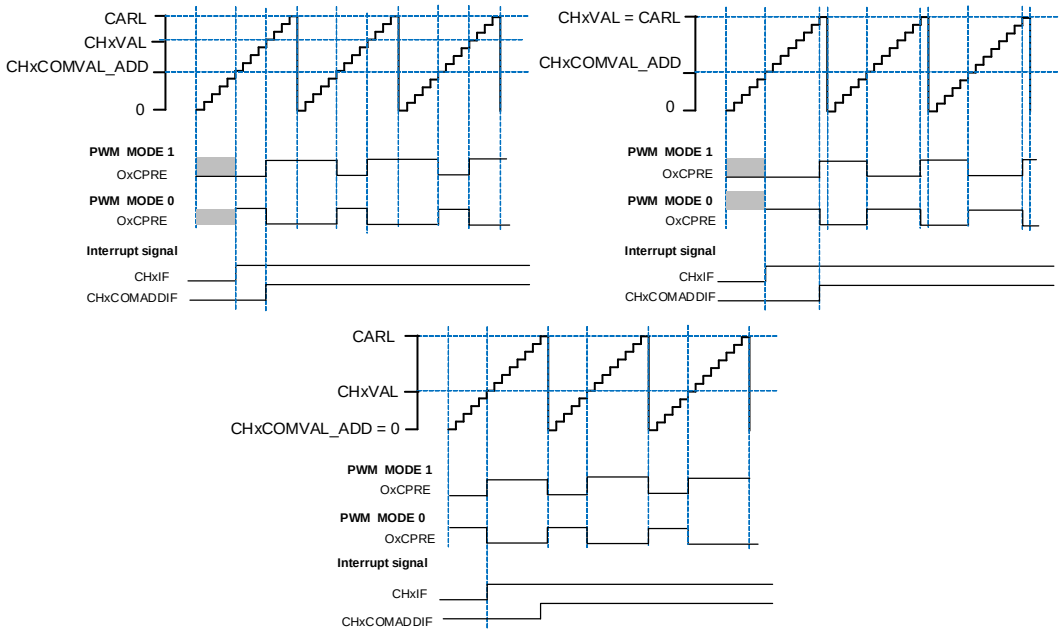

4) One of the value of CHxVAL and CHxCOMVAL_ADD exceeds CARL.

Figure 24-22. Channel x output PWM with CHxVAL or CHxCOMVAL_ADD exceeds CARL

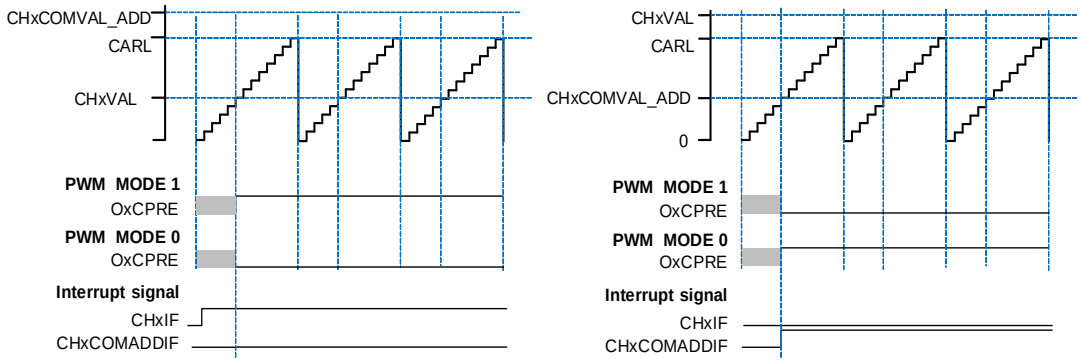

The composite PWM mode is intended to support the generation of PWM signals where the period is not modified while the signal is being generated, but the duty cycle will be varied. *Figure 24-23. Channel x output PWM duty cycle changing with CHxCOMVAL_ADD* shows the PWM output and interrupts waveform.

In some cases, the CHxCOMVAL_ADD match can happen on the next counter period (the value of CHxCOMVAL_ADD was written after the counter reaches the value of CHxVAL, and the value of CHxCOMVAL_ADD was less than or equal to the CHxVAL).

Figure 24-23. Channel x output PWM duty cycle changing with CHxCOMVAL_ADD

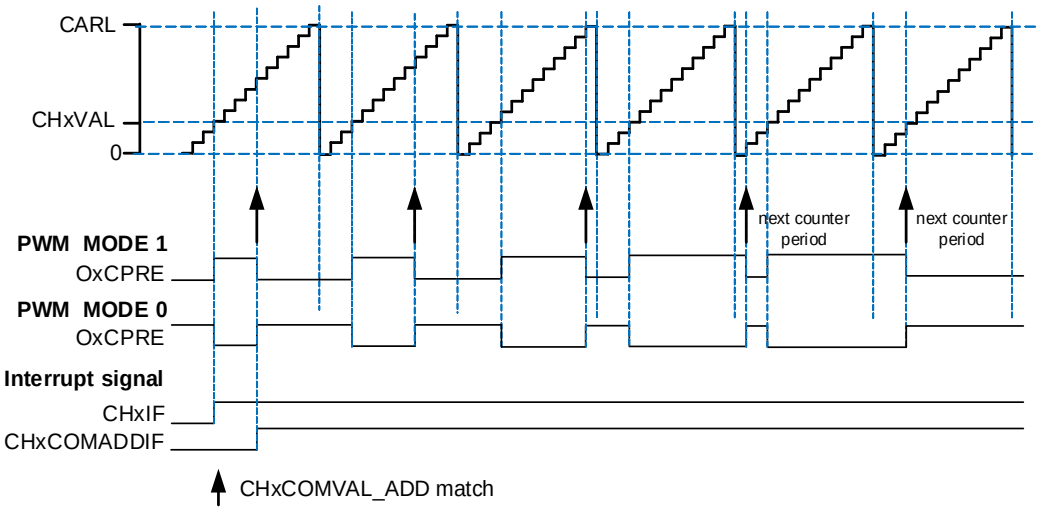

If more than one channels are configured in composite PWM mode, it is possible to fix an offset for the channel x match edge of each pair with respect to other channels. This behavior is useful in the generation of lighting PWM control signals where it is desirable that edges are not coincident with each other pair to help eliminate noise generation. The CHxVAL register value is the shift of the PWM pulse with respect to the beginning of counter period.

Figure 24-24. Four Channels outputs in Composite PWM mode

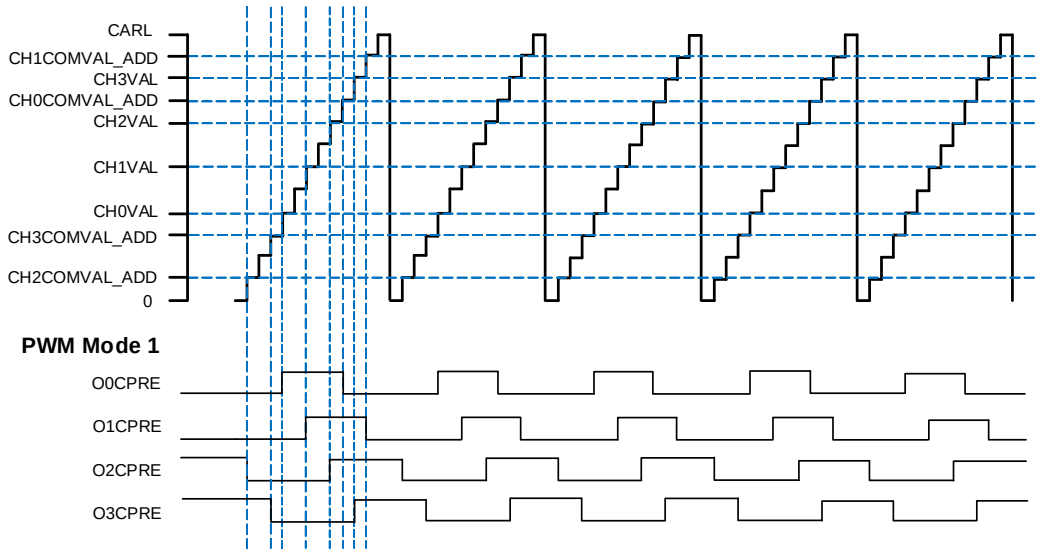

Output match pulse select

Basing on that CHx_O (x=0..3) outputs are configured by CHxCOMCTL[3:0] (x=0..3) bits when the match events occur, the output signal is configured by CHxOMPSEL[1:0] (x=0..3) bit to be normal or a pulse.

When the match events occur, the CHxOMPSEL[1:0] (x=0..3) bits are used to select the output of OxCPRE which drives CHx_O:

- CHxOMPSEL = 2'b00, the OxCPRE signal is output normally with the configuration of CHxCOMCTL[3:0] bits;
- CHxOMPSEL = 2'b01, only the counter is counting up, the OxCPRE signal is output a pulse when the match events occur, and the pulse width is one CK_TIMER clock cycle.
- CHxOMPSEL = 2'b10, only the counter is counting down, the OxCPRE signal is output a pulse when the match events occur, and the pulse width is one CK_TIMER clock cycle.
- CHxOMPSEL = 2'b11, both the counter is counting up and counting down, the OxCPRE signal is output a pulse when the match events occur, and the pulse width is one CK_TIMER clock cycle.

Figure 24-25. CHx_O output with a pulse in edge-aligned mode (CHxOMPSEL≠2'b00)

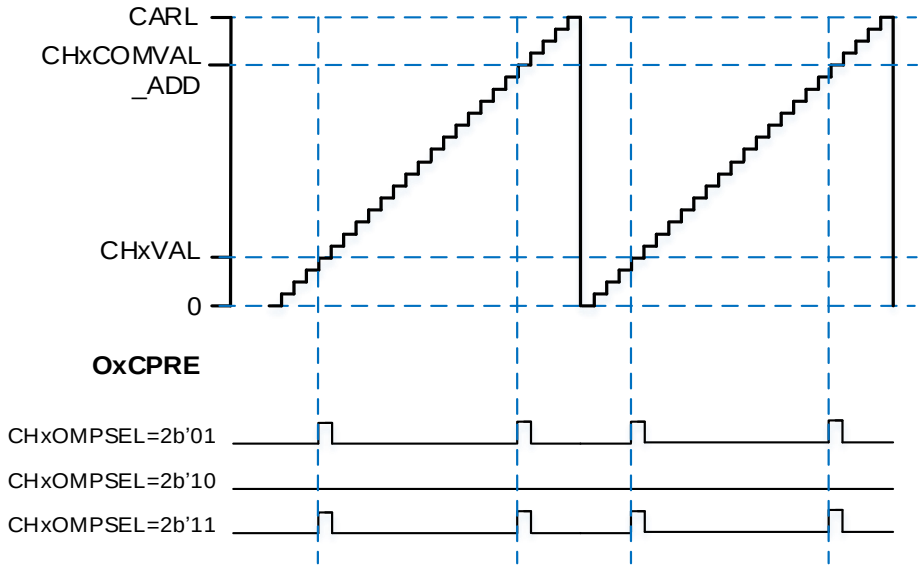

Figure 24-26. CHx_O output with a pulse in center-aligned mode (CHxOMPSEL≠2'b00)

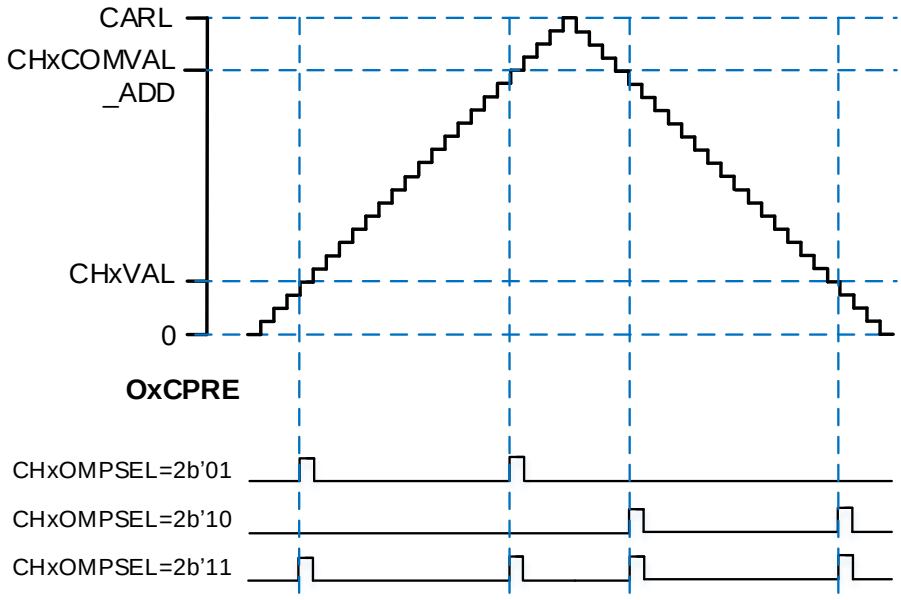

Channel output prepare signal

As is shown in ***Figure 24-14. Output compare logic (when MCHxMSEL = 2'00, x=0, 1, 2, 3)*** and ***Figure 24-15. Output compare logic (when MCHxMSEL = 2'11, x=0,1,2,3)***, when TIMERx is configured in compare match output mode, a middle signal named OxCPRE or MOxCPRE (channel x output or multi mode channel x output prepare signal) will be generated before the channel outputs signal.

The OxCPRE and MOxCPRE signal have several types of output function. The OxCPRE signal type is defined by configuring the CHxCOMCTL bit and the MOxCPRE signal type is defined by configuring the MCHxCOMCTL bit.

Take OxCPRE as an example for description below, these include keeping the original level by configuring the CHxCOMCTL field to 0x00, setting to high by configuring the CHxCOMCTL field to 0x01, setting to low by configuring the CHxCOMCTL field to 0x02 or toggling signal by configuring the CHxCOMCTL field to 0x03 when the counter value matches the content of the TIMERx_CHxCV register.

The PWM mode 0/ PWM mode 1 output is another output type of OxCPRE which is setup by configuring the CHxCOMCTL field to 0x06/0x07. In these modes, the OxCPRE signal level is changed according to the counting direction and the relationship between the counter value and the TIMERx_CHxCV content. Refer to the definition of relative bit for more details.

Another special function of the OxCPRE signal is forced output which can be achieved by configuring the CHxCOMCTL field to 0x04/ 0x05. The output can be forced to an inactive/active level irrespective of the comparison condition between the values of the counter and the TIMERx_CHxCV.

Configure the CHxCOMCEN bit to 1 in the TIMERx_CHCTL0 register, the OxCPRE signal can be forced to 0 when the ETIFP signal derived from the external ETI pin is set to a high level. The OxCPRE signal will not return to its active level until the next update event occurs.

Outputs Complementary

The outputs of CHx_O and MCHx_O have two situations:

- MCHxMSEL=2'b00: The MCHx_O output is independent from the CHx_O output;
- MCHxMSEL=2'b11: The outputs of MCHx_O and CHx_O are complementary and the MCHxOMCTL bits are not used in the generation of the MCHx_O output.

Function of complementary is for a pair of channels, CHx_O and MCHx_O, the two output signals cannot be active at the same time. The TIMERx has 4 pairs of channels, all the four pairs have this function. The complementary signals CHx_O and MCHx_O are controlled by a group of parameters: the CHxEN and MCHxEN bits in the TIMERx_CHCTL2 register, the POEN, ROS and IOS bits in the TIMERx_CCHP register(when CHx_O and MCHx_O channels has separated deadtime value and break function, please refer to ***Separated dead time insertion and Break function***), ISOx and ISOxN bits in the TIMERx_CTL1 register. The output polarity is determined by CHxP and MCHxP bits in the TIMERx_CHCTL2 register.

When the the outputs of CHx_O and MCHx_O are complementary, there are three situations: output enable、output off-state and output disabled. The details are shown in ***Table 24-4. Complementary outputs controlled by parameters (MCHxMSEL =2'b11)***.

Table 24-4. Complementary outputs controlled by parameters (MCHxMSEL =2'b11)

<table>
<tr><th colspan="5">Complementary Parameters</th><th colspan="2">Output Status</th></tr>
<tr><th>POEN</th><th>ROS</th><th>IOS</th><th>CHxEN</th><th>MCHxEN</th><th>CHx_O</th><th>MCHx_O</th></tr>
<tr><td rowspan="5">0</td><td rowspan="5">0/1</td><td rowspan="4">0</td><td rowspan="2">0</td><td>0</td><td colspan="2">CHx_O / CHx_ON = LOW
CHx_O / CHx_ON output disable(1).</td></tr>
<tr><td>1</td><td colspan="2" rowspan="3">CHx_O/ CHx_ON output "off-state" (2):
the CHx_O/ CHx_ON output inactive level firstly: CHx_O = CHxP, CHx_ON = CHxNP; If the clock for deadtime generator is present, after a deadtime: CHx_O = ISOx, CHx_ON = ISOxN. (3)</td></tr>
<tr><td rowspan="2">1</td><td>0</td></tr>
<tr><td>1</td></tr>
<tr><td>1</td><td>x</td><td>x</td><td colspan="2">CHx_O/ CHx_ON output "off-state":
the CHx_O/ CHx_ON output inactive level firstly: CHx_O = CHxP, CHx_ON = CHxNP; If the clock for deadtime generator is present, after a deadtime: CHx_O = ISOx, CHx_ON = ISOxN.</td></tr>
<tr><td rowspan="8">1</td><td rowspan="4">0</td><td rowspan="8">0/1</td><td rowspan="2">0</td><td>0</td><td colspan="2">CHx_O/MCHx_O = LOW
CHx_O/MCHx_O output disable.</td></tr>
<tr><td>1</td><td>CHx_O = LOW
CHx_O output disable.</td><td>MCHx_O=OxCPRE⊕(4)MCHxP
MCHx_O output enable.</td></tr>
<tr><td rowspan="2">1</td><td>0</td><td>CHx_O=OxCPRE⊕CHxP
CHx_O output enable.</td><td>MCHx_O = LOW
MCHx_O output disable.</td></tr>
<tr><td>1</td><td>CHx_O=OxCPRE⊕CHxP
CHx_O output enable.</td><td>MCHx_O = (! OxCPRE)(5)⊕ MCHxP.
MCHx_O output enable.</td></tr>
<tr><td rowspan="4">1</td><td rowspan="2">0</td><td>0</td><td>CHx_O = CHxP
CHx_O output "off-state".</td><td>MCHx_O = MCHxP
MCHx_O output "off-state".</td></tr>
<tr><td>1</td><td>CHx_O = CHxP
CHx_O output "off-state"</td><td>MCHx_O=OxCPRE⊕MCHxP
MCHx_O output enable</td></tr>
<tr><td rowspan="2">1</td><td>0</td><td>CHx_O=OxCPRE⊕CHxP
CHx_O output enable</td><td>MCHx_O = MCHxP
MCHx_O output "off-state".</td></tr>
<tr><td>1</td><td>CHx_O=OxCPRE⊕CHxP
CHx_O output enable</td><td>MCHx_O = (! OxCPRE)⊕ MCHxP
MCHx_O output enable.</td></tr>
</table>

Note:

(1) output disable: the CHx_O / CHx_ON are disconnected to corresponding pins, the pin is floating with GPIO pull up/down setting which will be Hi-Z if no pull.

(2) "off-state": CHx_O / CHx_ON output with inactive state (e.g., CHx_O = 0⊕CHxP = CHxP).

(3) See Break mode section for more details.

(4) ⊕: Xor calculate.

(5) (! OxCPRE)：the complementary output of the OxCPRE signal.

Dead time insertion

The dead time insertion is enabled when MCHxMSEL=2'b11 and both CHxEN and MCHxEN are configured to 1'b1, it is also necessary to configure POEN to 1. The field named DTCFG defines the dead time delay that can be used for all channels. Refer to the ***Complementary channel protection register (TIMERx_CCHP)*** for details about the delay time.

The dead time delay insertion ensures that two complementary signals are not active at the same time.

When the channel x match event (TIMERx_CNT = CHxVAL) occurs, OxCPRE will be toggled in PWM mode 0. At point A in ***Figure 24-27. Complementary output with dead time insertion***, CHx_O signal remains at the low level until the end of the dead time delay, while MCHx_O signal will be cleared at once. Similarly, at point B when the channelx match event (TIMERx_CNT = CHxVAL) occurs again, OxCPRE is cleared, and CHx_O signal will be cleared at once, while MCHx_O signal remains at the low level until the end of the dead time delay.

Sometimes, we can see corner cases about the dead time insertion. For example: the dead time delay is greater than or equal to the duty cycle of the CHx_O signal, then the CHx_O signal is always inactive (As shown in ***Figure 24-27. Complementary output with dead time insertion***).

Figure 24-27. Complementary output with dead time insertion

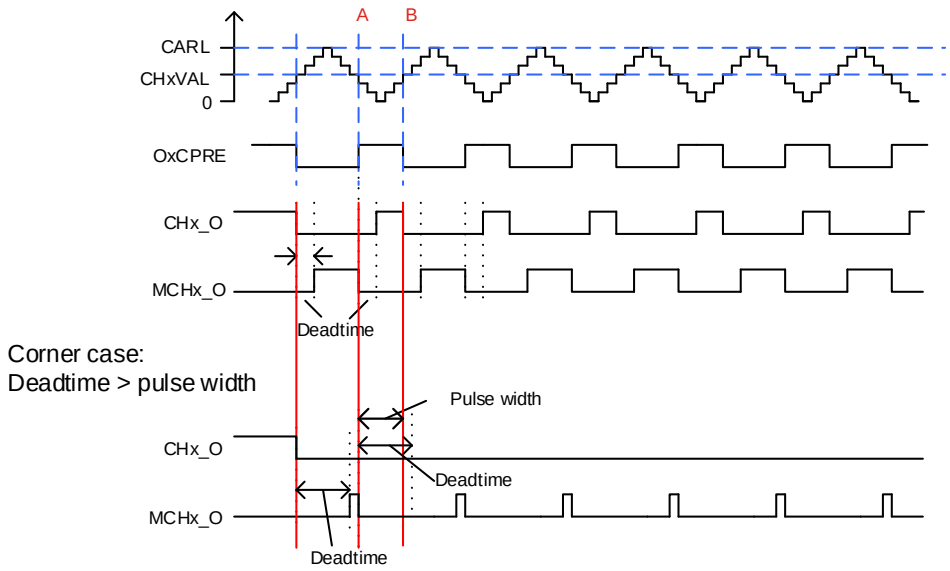

When CHx_O and MCHx_O channels has separated deadtime value, please refer to ***Separated dead time insertion and Break function***.

By configuring the DTIENCHx (x=0...3) bit in the TIMERx_CTL2 register to realize the

independent control of dead-time insertion function for each pair of channels. When the DTIENCHx (x=0...3) bit is “0”, the corresponding channels CHx_O and CHx_ON will not be inserted into the dead-time.

Break function

The MCHx_O output is the inverse of the CHx_O output when the MCHxMSEL=2’b11 (and the MCHxOMCTL bits are not used in the generation of the MCHx_O output). In this case, CHx_O and MCHx_O signals cannot be set to active level at the same time.

The advanced timers have two kinds of break function: BREAK0 and BREAK1. The break functions can be enabled by setting the BRK0EN and BRK1EN bits in the TIMERx_CCHP register. The break input polarities are configured by the BRK0P and BRK1P bits in TIMERx_CCHP register, the inputs are active on level.

In break functions, CHx_O and MCHx_O are controlled by the POEN, OAEN, IOS and ROS bits in the TIMERx_CCHP register, ISOx and ISOxN bits in the TIMERx_CTL1 register.

The break event is the result of logic ORed of all sources. The break functions can handle three types of event sources:

- External sources: coming from BRKINx (x=0...2) inputs;
- System sources: HXTAL stuck event which is generated by Clock Monitor CKM in RCU, LVD lock event, Cortex®-M7 LOCKUP_LOCK event or SRAM parity error event;
- On-chip peripheral events: input by comparator output or HPDF watchdog output.

Break events can also be generated by software using BRK0G or BRK1G bits in the TIMERx_SWEVG register.

Refer to ***Figure 24-28. BREAK0 function logic diagram*** and ***Figure 24-29. BREAK1 function logic diagram***, BRKINx(x=0..2) can select GPIO pins from the TRIGSEL module, which can select by ***Trigger selection for TIMER0_BRKIN register (TRIGSEL_TIMER0BRKIN)*** and ***Trigger selection for TIMER7_BRKIN register (TRIGSEL_TIMER7BRKIN)***.

Figure 24-28. BREAK0 function logic diagram

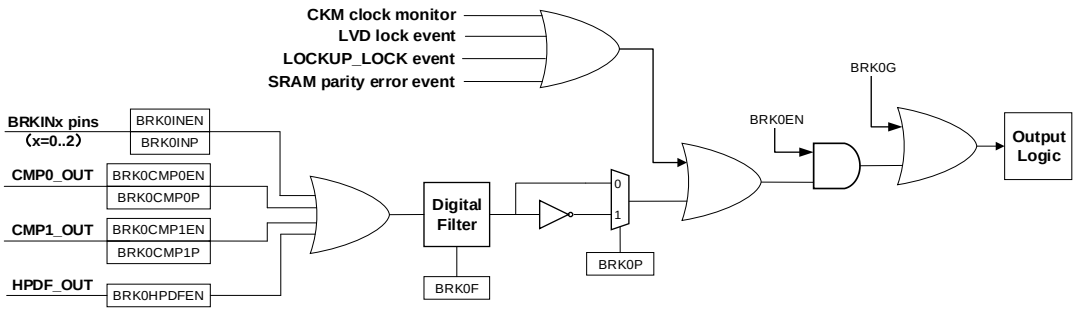

Figure 24-29. BREAK1 function logic diagram

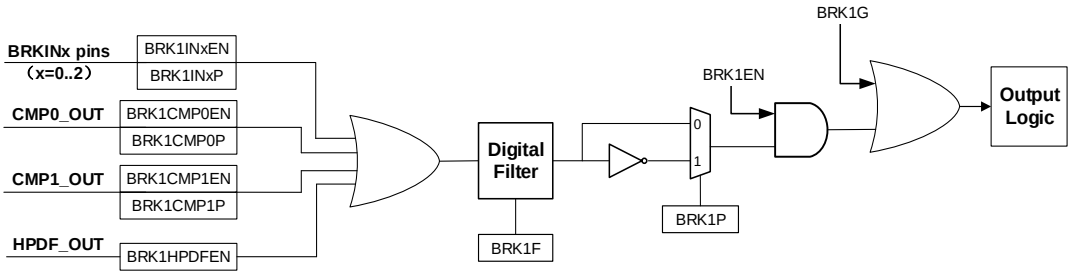

BREAK0 can be used to handle the faults of system sources, on-chip peripheral events and external sources. When a BREAK0 event occurs, the outputs are force at an inactive level, or at a predefined level (either active or inactive) after a deadtime duration. BREAK1 only can be used to handle the faults of on-chip peripheral events and external sources. When a BREAK1 event occurs, the outputs are force at an inactive level.

When the MCHxMSEL = 2'b11 and a break occurs, the POEN bit is cleared asynchronously. As soon as POEN is 0, the level of the CHx_O and MCHx_O outputs are determined by the ISOx and ISOxN bits in the TIMERx_CTL1 register. If IOS = 0, the timer releases the enable output, otherwise, the enable output remains high. When IOS=1, the output behavior of the channel is shown in ***Figure 24-30. Output behavior of the channel in response to BREAK0 (the break input high active and IOS=1)***. The complementary outputs are first in the reset state, and then the dead time generator is reactivated to drive the outputs with the level programmed in the ISOx and ISOxN bits after a dead time.

Figure 24-30. Output behavior of the channel in response to BREAK0 (the break input high active and IOS=1)

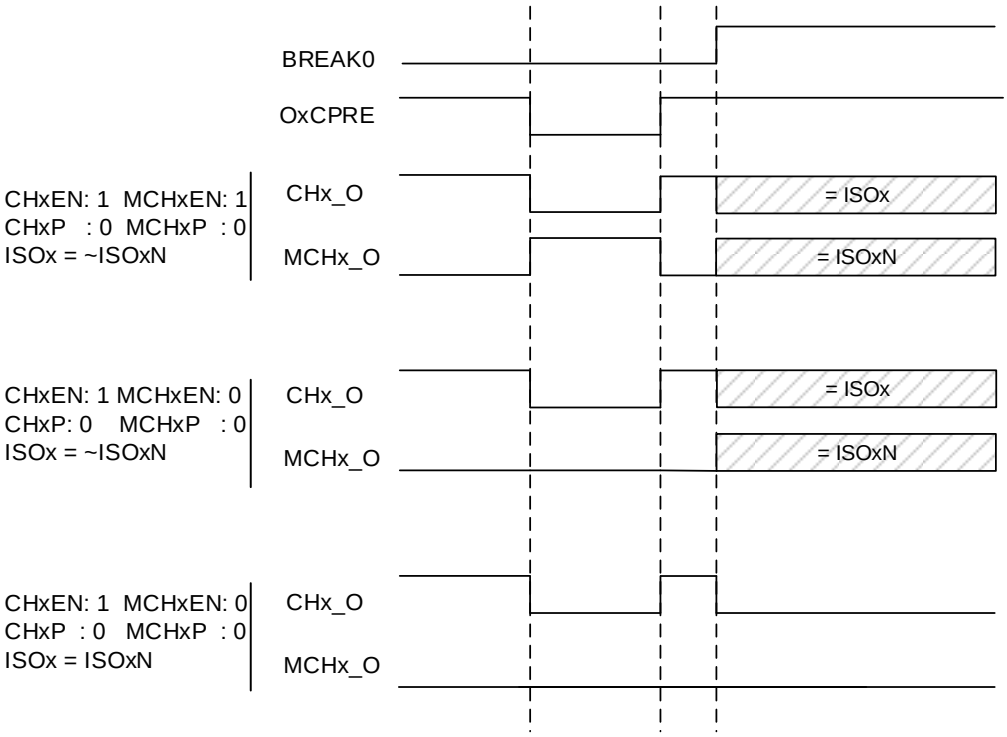

BREAK0 function has a higher priority than BREAK1 function. BREAK1 function only can be

used when the IOS =1 and ROS =1.

Table 24-5. Output behavior of the channel in response to a BREAK0 and BREAK1 (the break input is high active)

BREAK0 inputs	BREAK1 inputs	Output Status	
		CHx_O	MCHx_O
High	High	IOS=1: CHx_O output is inactive and then output to idle level (by IOSx bit) after a deadtime time. IOS=0: CHx_O output disable (inactive).	IOS=1: MCHx_O output is inactive and then output to level (by IOSxN bit) after a deadtime time. IOS=0: MCHx_O output disable (inactive).
	Low		
Low	High	CHx_O output disable (inactive).	MCHx_O output disable (inactive).

When a break occurs, the BRKIF bit in the TIMERx_INTF register will be set. If BRKIE is 1, an interrupt will be generated.

Figure 24-31. Output behavior of the channel outputs with the BREAK0 and BREAK1

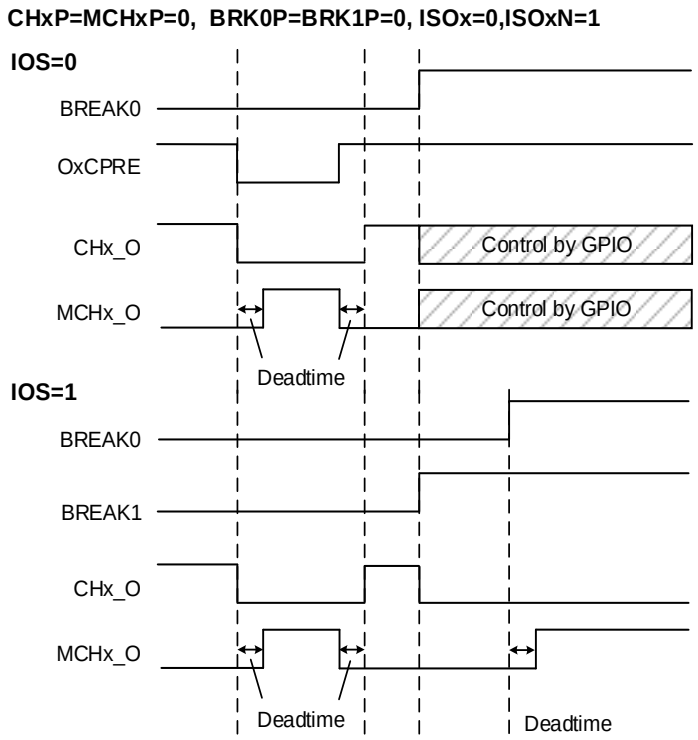

When CHx_O and MCHx_O channels has separated break function, please refer to ***Separated dead time insertion and Break function***.

By configuring the BEKENCHx (x=0...3) bit in the TIMERx_CTL2 register to realize the independent control of break function for each pair of channels. When the BEKENCHx(x=0…3) bit is “0” and a break event occurs, the corresponding channels CHx_O and MCHx_O will not be changed and the outputs is keeping.

Locked break function

The BRKINx(x=0...2) input pins of advanced timer have the locked break function, this function can be enabled by setting the BRK0LK and BRK1LK bits in the TIMERx_CCHP register.

When the locked break function is enabled, the BRKINx(x=0...2) pins need to be configured to open-drain output mode with low level active (BRK0P/ BRK1P=0 and BRK0INxP/ BRK1INxP=0). When any break source requests occur, the corresponding BRKINx(x=0...2) pin can be forced to low level. If the break input polarity is active high (BRK0P/ BRK1P=1 and BRK0INxP/ BRK1INxP=1), the locked break function is invalid.

When the break function is enabled (the BRK0EN =1 or BRK1EN = 1), the BRKINx(x=0...2) pin can be forced to low level with the BRK0G or BRK1G bits setting to 1 by software.

When the break function is disabled (the BRK0EN =0 or BRK1EN = 0), setting the BRK0G or BRK1G bits will have no effect on the BRKINx(x=0..2) pin. The BRK0F or BRK1F bits will set and the channel outputs will be in a safe state.

The BRKINx(x=0..2) pin can be released by setting the BRK0REL/ BRK1REL bit in the TIMERx_CCHP register. When the break input sources are inactive, the BRK0REL/ BRK1REL bit will cleared by hardware and the BRKINx(x=0..2) pin will restore the locked break function.

In the following two cases, the BRKINx(x=0..2) pin cannot be released:

- Break input sources are active: the BRK0REL/ BRK1REL bit is set to 1 and the BRKINx(x=0..2) pin locked break function is released. The break events is still active, because the break input sources are still active.
- POEN=1: when the channel outputs are enabled, the BRKINx(x=0...2) pin cannot be released even if the BRK0REL/ BRK1REL is set.

Table 24-6. Break function input pins locked/ released conditions

POEN	BRK0LK/ BRK1LK	BRK0REL/ BRK1REL	Break input pin state
0	1	0	Locked
	1	1	Released

The locked break function of the BREAK0/BREAK1 input pin BRKINx (x=0...2) is enabled by default (BRK0REL=0 and BRK1REL=0). When the BREAK0/ BREAK1 events occur, the following steps can be used to reconfigure the locked break function:

- Set the BRK0REL or BRK1REL bit to 1 and released the BRKINx (x=0...2) pin;
- The software waits for the system break sources inactive, and then clears the SYSBIF flag；
- The software polls the state of BRK0REL/ BRK1REL bits, until the BRK0REL/ BRK1REL bits are cleared (cleared by hardware).

Then the locked break function of BREAK0/ BREAK1 input pin is re-enabled, and the channel outputs can be restored by setting the POEN bit to 1 by software.

Figure 24-32. BRKINx (x=0...2) pins logic with BREAK0 function

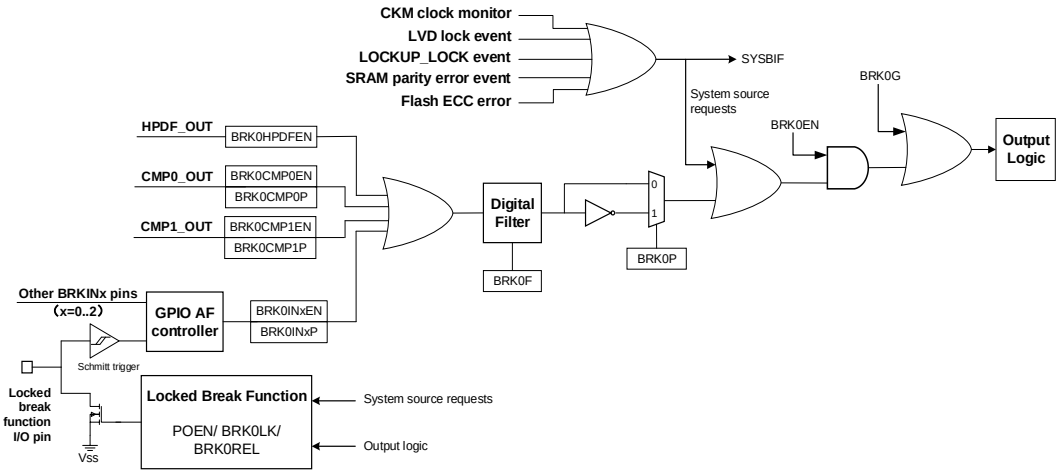

Separated dead time insertion and Break function

The separated dead time insertion and break function for CHx_O and MCHx_O allows that each pair of channels has its own deadtime value and break function. In this function, CHx_O and MCHx_O are actually controlled by the IOS bit、ROS bit and DTCFG[7:0] bits in TIMERx_FCCHPy(y=0..3) register.

By configuring the FCCHPyEN (y=0...3) bits in the TIMERx_FCCHPy(y=0..3) registers can select whether each pair of channels uses the separated dead time insertion and break function. When the FCCHPyEN=0, the ROS、IOS and DTCFG[7:0] bits in TIMERx_CCHP register is active; When the FCCHPyEN=1, the ROS、IOS and DTCFG[7:0] bits in TIMERx_FCCHP0 register is active.

Quadrature decoder

The quadrature decoder function uses two quadrature inputs CI0 and CI1 derived from the TIMERx_CH0 and TIMERx_CH1 pins respectively to interact with each other to generate the counter value.

Setting TSCFGy[4:0](y=0..2) != 5'b00000 to select that the counting direction of timer is determined only by the CI0, only by the CI1, or by the CI0 and the CI1.

The DIR bit is modified by hardware automatically during the voltage level change of each direction selection source. The mechanism of changing the counter direction is shown in ***Table 24-7. Counting direction in different quadrature decoder signals***. The CI0FE0 and CI1FE1 are the signals of the CI0 and CI1 after the filtering and polarity selection. The quadrature decoder can be regarded as an external clock with a direction selection. This means that the counter counts continuously from 0 to the counter-reload value. Therefore, users must configure the TIMERx_CAR register before the counter starts to count.

Table 24-7. Counting direction in different quadrature decoder signals

Counting mode	Level	CI0FE0		CI1FE1	
		Rising	Falling	Rising	Falling
Quadrature decoder mode 0 TSCFG0[4:0]!= 5'b00000	CI1FE1=1	Down	Up	-	-
	CI1FE1=0	Up	Down	-	-
Quadrature decoder mode 1 TSCFG1[4:0]!= 5'b00000	CI0FE0=1	-	-	Up	Down
	CI0FE0=0	-	-	Down	Up
Quadrature decoder mode 2 TSCFG2[4:0]!= 5'b00000	CI1FE1=1	Down	Up	X	X
	CI1FE1=0	Up	Down	X	X
	CI0FE0=1	X	X	Up	Down
	CI0FE0=0	X	X	Down	Up

Note: "-" means "no counting"; "X" means impossible. "0" means "low level", "1" means "high level".

Figure 24-33. Example of counter operation in decoder interface mode

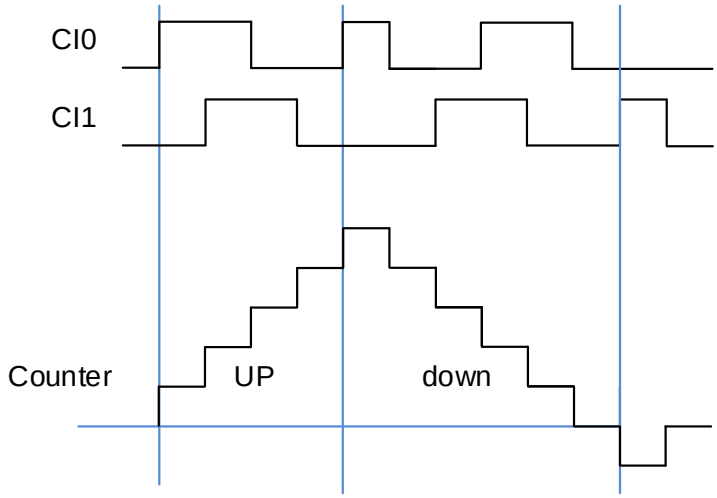

Figure 24-34. Example of decoder interface mode with CI0FE0 polarity inverted

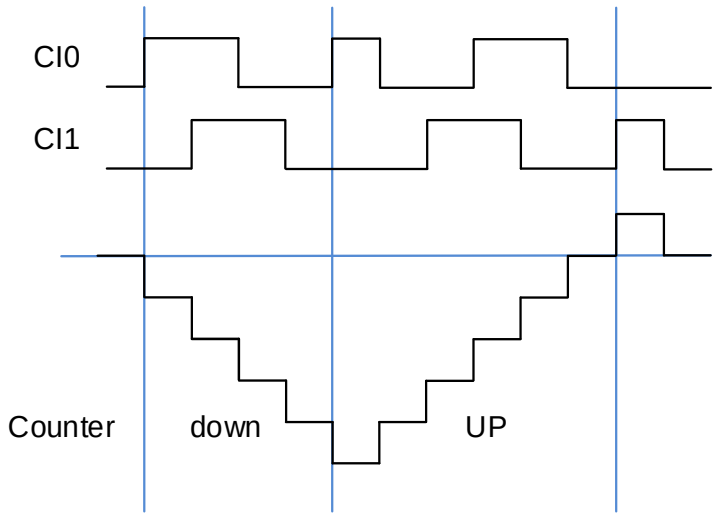

Quadrature decoder signal detection

The quadrature decoder signal jump detection function can be enabled by setting the DECJDEN bit (in TIMERx_CTL2 register) to 1, which can be used to detect whether the level

jump edges (rising or falling) of the CI0 and CI1 signals occur at the same time.

When DECJDEN =1, if the level transitions of the two quadrature signals CI0 and CI1 occur simultaneously, the interrupt flag DECJIF is set, if DECJIE=1, the corresponding interrupt is generated.

The quadrature decoder signal disconnection detection function can be enabled by setting the DECDISDEN bit (in TIMERx_CTL2 register) to 1, which can be used to detect the signal conditions of the CI0 and CI1 signals.

As shown in ***Figure 24-35. Quadrature decoder signal disconnection detection block diagram***. The signal detection module includes two 32-bit watchdog counters and a period register. The CI0 and CI1 signals are used to reset the two watchdog counters respectively.

When DECDISDEN=1, two watchdog counters start counting up at the same time. If the counter continues to count to the watchdog period value (this value is determined by the WDGPER[31:0] bit-field in the TIMERx_WDGPER register), the counter is timeout and the interrupt flag DECDISIF is set. If DECDISIE=1, the corresponding interrupt is generated.

Figure 24-35. Quadrature decoder signal disconnection detection block diagram

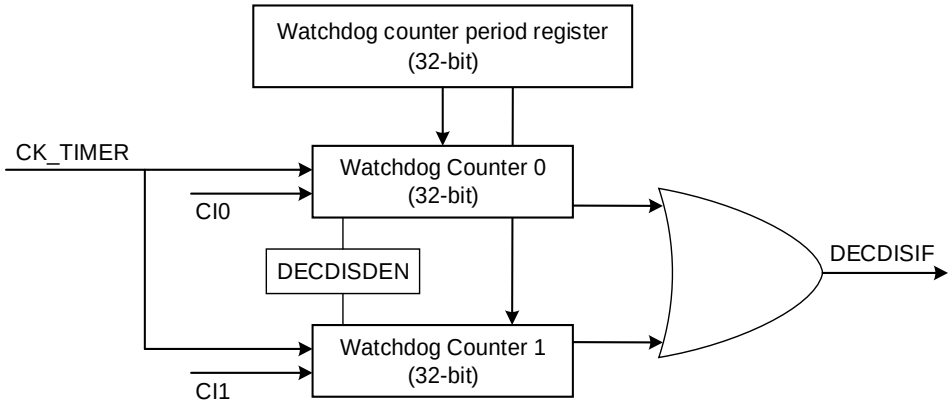

Non-quadrature decoder

The non-quadrature decoder function has two modes: non-quadrature decoder mode 0 and non-quadrature decoder mode 1, which can be selected by setting TSCFGy[4:0](y=8,9) != 5'b00000.There are two input sources in these two modes: CI0 and CI1.

When the non-quadrature decoder mode 0 is enabled, the CI0 signal is used as the count pulse and CI1 is used as the count selection signal. When CH1P=0, the counter will count up on the rising edge of the CI0 input signal merely in the case that the CI1 signal is high; When CH1P=1, the counter will count up on the rising edge of the CI0 input signal merely in the case that the CI1 signal is low. The more details is shown in ***Figure 24-36. Example of counter operation in non-quadrature decoder mode 0 with CH1P=0***.

Figure 24-36. Example of counter operation in non-quadrature decoder mode 0 with

CH1P=0

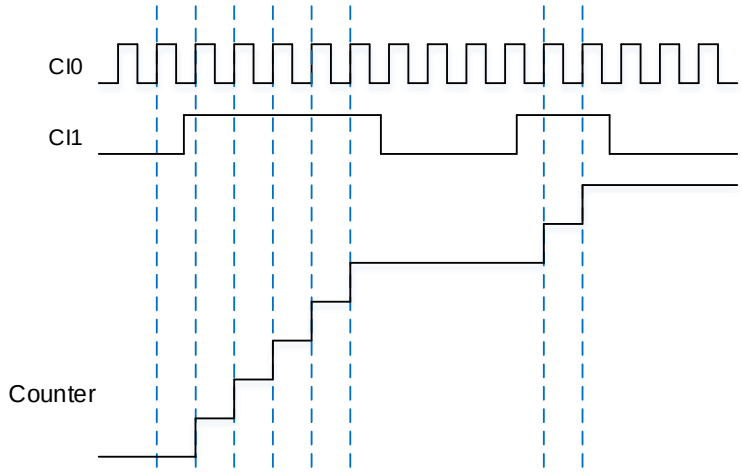

When the non-quadrature decoder mode 1 is enabled, the CI0 signal is used as the count pulse (with the CH0P is used to select the counter edge) and the CI1 signal is used as the count direction selection. The more details is shown in ***Table 24-8. the counter operation in in non-quadrature decoder mode 1*** and ***Figure 24-37. Example of counter operation in non-quadrature decoder mode 1 with CH0P=0***.

Table 24-8. the counter operation in in non-quadrature decoder mode 1

CH0P	level	counter operation
0	CI1 is high	the counter will count up on the rising edge of the CI0 input signal
	CI1 is low	the counter will count down on the rising edge of the CI0 input signal
1	CI1 is high	the counter will count up on the falling edge of the CI0 input signal
	CI1 is low	the counter will count down on the falling edge of the CI0 input signal

Figure 24-37. Example of counter operation in non-quadrature decoder mode 1 with CH0P=0

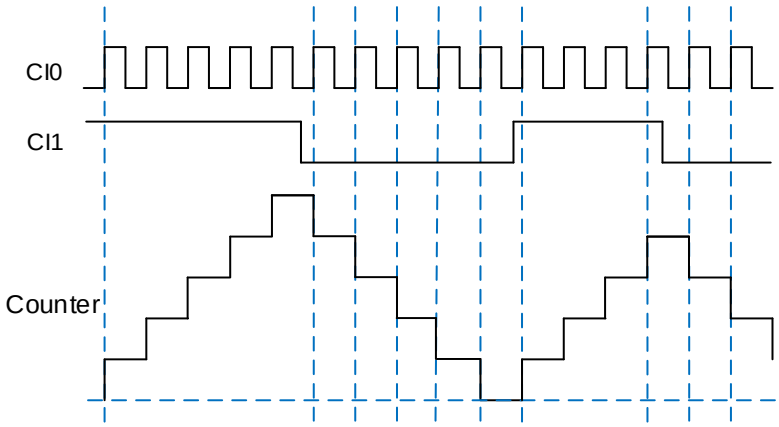

Hall sensor function

Hall sensor is generally used to control BLDC motor; the advanced timer supports this function.

Figure 24-38. Hall sensor is used for BLDC motor shows how to connect the timer and the motor. And two timers are needed. TIMER_in(Advanced/General L0 TIMER）is used to accept three rotor position signals of motor from hall sensors.

Each of the 3 hall sensors provides a pulse which is applied to an input capture pin, then both the speed and position of rotor can be calculated by analyzing the hall sensor signals.

By the internal connection function (TRGO0-ITIx), TIMER_in and TIMER_out can be connected. TIMER_out will generate PWM signals to control the speed of BLDC motor based on the ITIx. Then, the feedback circuit is finished, you can change the configuration to fit your request.

Because the advanced/general L0 TIMER has the input XOR function, they can be used as the TIMER_in timer. And the advanced timer has the functions of complementary output and dead time, so it can be used as the TIMER_out timer. Else, based on the timer's internal connection relationship, pair's timers can be selected. For example:

TIMER_in (TIMER0) -> TIMER_out (TIMER7 ITI0)
TIMER_in (TIMER1) -> TIMER_out (TIMER0 ITI1)

After appropriate interconnected timers are selected and wires are connected, the timers need to be configured. Some key settings are as follows:

- Enable XOR by setting TI0S, then, the change of each input signal will make the CI0 toggle. CH0VAL will record the current value of counter.
- Choose ITIx to trigger commutation by configuring CCUC and CCSE.
- Configure PWM parameters based on the requests.

Figure 24-38. Hall sensor is used for BLDC motor

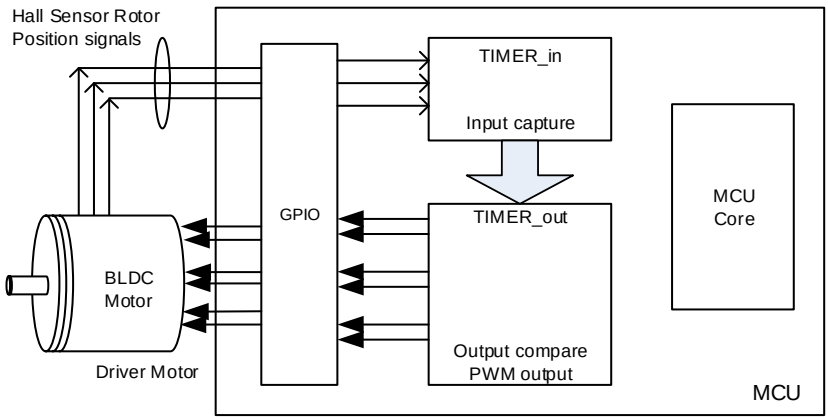

Figure 24-39. Hall sensor timing between two timers

Advanced/General L0 TIMER_in under input capture mode

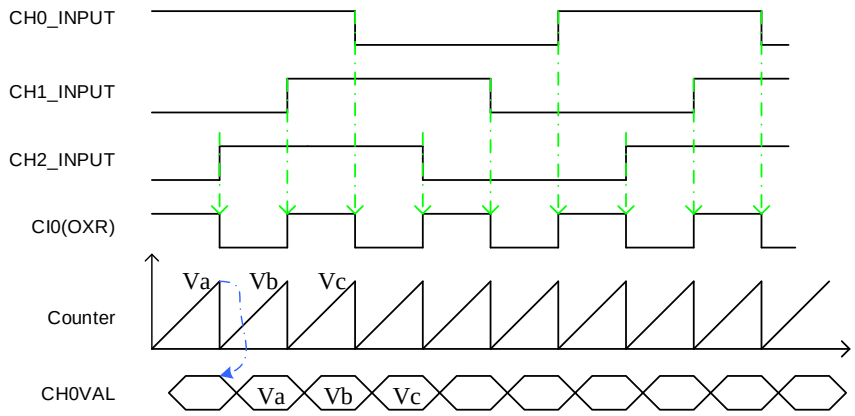

Advanced TIMER_out under output compare mode(PWM with Dead-time)

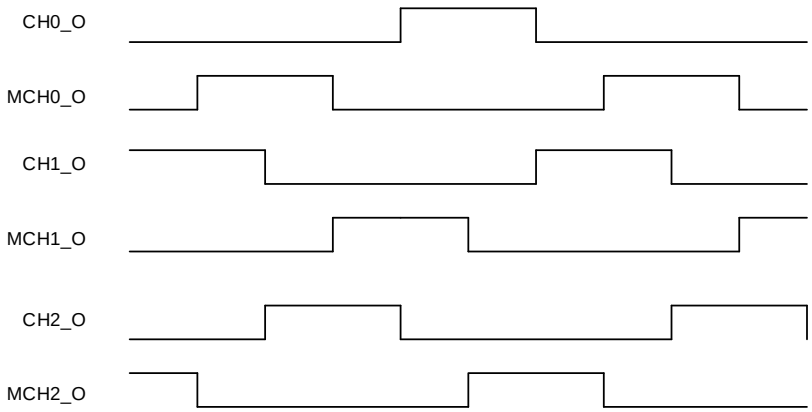

Master-slave management

The TIMERx can be synchronized with a trigger in several modes including restart mode, pause mode and event mode and so on, which is selected by the TSCFGy[4:0] (y=3..7) in SYSCFG_TIMERxCFG(x=0,7).

Table 24-9. Examples of slave mode

	Mode Selection	Source Selection	Polarity Selection	Filter and Prescaler
LIST	TSCFGy[4:0] y=3: restart mode y=4: pause mode y=5: event mode y=6: external clock mode 0 y=7: restart + event mode	TSCFGy[4:0] 00000:Mode disable 00001: ITI0 00010: ITI1 00011: ITI2 00100: ITI3 00101: CI0F_ED 00110: CI0FE0 00111: CI1FE1	If CIxFEx(x=0...3) or MCIxFEMx(x=0..3) are selected as the trigger source, configure the CHxP, MCHxP and MCHxFP for the polarity selection and inversion. If ETIFP (the filtered output of external	For the ITIx, no filter and prescaler can be used. For the CIx/ MCIx, filter can be used by configuring CHxCAPFLT/ MCHxCAPFLT, no prescaler can be used. For the ETIFP, filter

	Mode Selection	Source Selection	Polarity Selection	Filter and Prescaler
		01000: ETIFP(1) 01001: CI2FE2 01010: CI3FE3 01011: MCI0FEM0 01100: MCI1FEM1 01101: MCI2FEM2 01110: MCI3FEM3 10001: ITI12 10010: ITI13 10011: ITI14	trigger input ETI) is selected as the trigger source, configure the ETP for polarity selection and inversion.	can be used by configuring ETFC and prescaler can be used by configuring ETPSC.
Exam1	**Restart mode** The counter will be cleared and restart when a rising edge of trigger input comes.	TSCFG3[4:0] 5'b00001, ITI0 is selected.	For ITI0, no polarity selector can be used.	For the ITI0, no filter and prescaler can be used.
	Figure 24-40. Restart mode 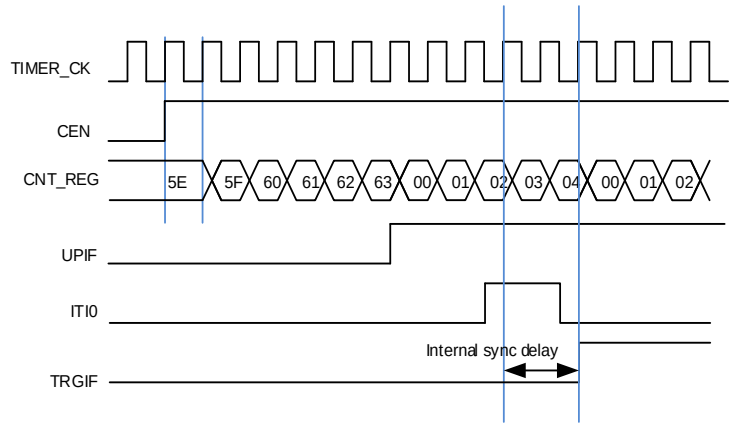			
Exam2	**Pause mode** The counter will be paused when the trigger input is low, and it will start when the trigger input is high.	TSCFG4[4:0] =5'b00110, CI0FE0 is selected.	TI0S=0 (Non-xor) [MCH0P=0, CH0P=0] CI0FE0 does not invert. The capture event will occur on the rising edge only.	Filter is bypassed in this example.

<table>
<tr><th></th><th>Mode Selection</th><th>Source Selection</th><th>Polarity Selection</th><th>Filter and Prescaler</th></tr>
<tr><td></td><td colspan="4">

Figure 24-41. Pause mode

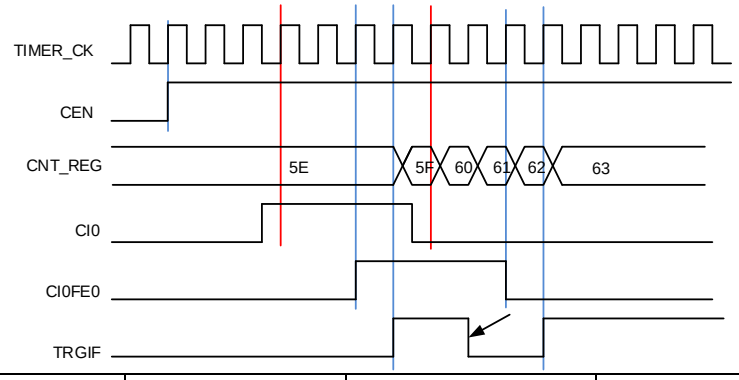

</td></tr>
<tr><td rowspan="2">Exam3</td><td>**Event mode**
The counter will start to count when a rising edge of trigger input comes.</td><td>TSCFG5[4:0] =5’b01000, ETIFP is selected.</td><td>ETP = 0, the polarity of ETI does not change.</td><td>ETPSC = 1, ETI is divided by 2.
ETFC = 0, ETI does not filter.</td></tr>
<tr><td colspan="4">

Figure 24-42. Event mode

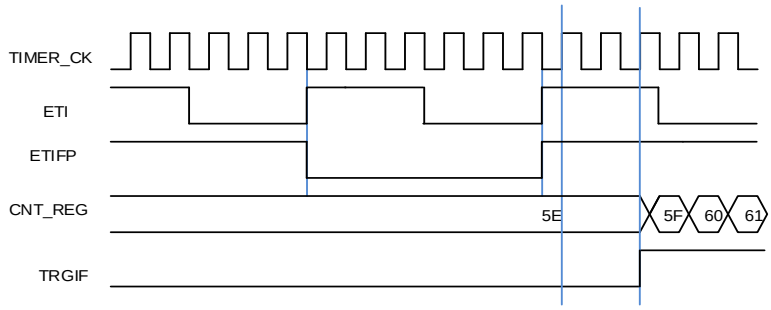

</td></tr>
</table>

(1) The ETI signal can be input from an external ETI pin or provide by on-chip peripherals, please refer to ***Trigger selection for TIMER0_ETI register (TRIGSEL_TIMER0ETI)*** for more details.

Single pulse mode

Single pulse mode is opposite to the repetitive mode, which can be enabled by setting SPM in TIMERx_CTL0. If SPM is set, the counter will be cleared and stopped automatically when the next update event occurs. In order to get a pulse waveform, the TIMERx is configured to PWM mode or compare mode by CHxCOMCTL or MCHxCOMCTL bits.

Once the timer is set to the single pulse mode, it is not necessary to configure the timer enable bit CEN in the TIMERx_CTL0 register to 1 to enable the counter. Setting the CEN bit to 1 or a trigger signal edge can generate a pulse and then keep the CEN bit at a high state until the update event occurs or the CEN bit is written to 0 by software. If the CEN bit is cleared to 0 by software, the counter will be stopped and its value will be held. If the CEN bit is automatically cleared to 0 by a hardware update event, the counter will be reinitialized.

In the single pulse mode, the active edge of trigger which sets the CEN bit to 1 will enable the counter. However, there exists several clock delays to perform the comparison result between the counter value and the TIMERx_CHxCV value. After a trigger rising occurs in the single

pulse mode, the OxCPRE signal will immediately be forced to the state which the OxCPRE/ MOxCPRE signals will change to, as the compare match event occurs without taking the comparison result into account.

Single pulse mode is also applicable to composite PWM mode (CHxCPWMEN = 1'b1 and CHxMS[2:0] = 3'b000).

Figure 24-43. Single pulse mode TIMERx_CHxCV=0x04, TIMERx_CAR=0x60

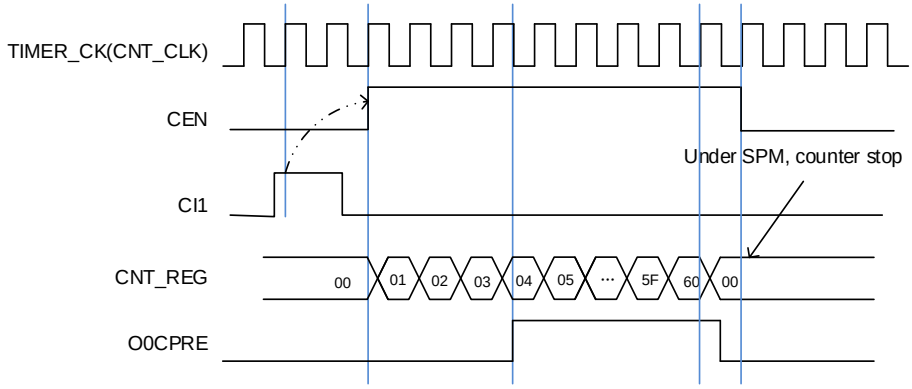

Delayable single pulse mode

Delayable single pulse mode is enabled by setting CHxCOMCTL[3:0]/ MCHxCOMCTL[3:0] in TIMERx_CHCTLx/ TIMERx_MCHCTLx registers. In this mode, the pulse width of OxCPRE/ MOxCPRE signal is determined by the TIMERx_CAR register.

Once the timer is set to the delayable single pulse mode, the following configuration is required:

- TIMERx need to work in slave mode and TSCFG7[4:0] != 5'b00000 in SYSCFG_TIMERxCFG(x=0,7) (restart +event mode);
- The CHxCOMCTL[3:0]/ MCHxCOMCTL[3:0] bit-field is setting to 4'b1000 (delayable single pulse mode 0) or 4'b1001 (delayable single pulse mode 1).

In delayable SPM mode 0. The behavior of OxCPRE/ MOxCPRE is performed as in PWM mode 0. When counting up, the OxCPRE/ MOxCPRE is active. When a trigger event occurs, the OxCPRE/ MOxCPRE is inactive. The OxCPRE/ MOxCPRE is active again at the next update event; When counting down, the OxCPRE/ MOxCPRE is inactive, when a trigger event occurs, the OxCPRE/ MOxCPRE is active. The OxCPRE/ MOxCPRE is inactive again at the next update event.

In delayable mode 1. The behavior of OxCPRE/ MOxCPRE is performed as in PWM mode 1. When counting up, the OxCPRE/ MOxCPRE is inactive, when a trigger event occurs, the OxCPRE/ MOxCPRE is active. The OxCPRE/ MOxCPRE is inactive again at the next update event; When counting down, the OxCPRE/ MOxCPRE is active. When a trigger event occurs, the OxCPRE/ MOxCPRE is inactive. The OxCPRE/ MOxCPRE is active again at the next update event.

Note:

1) The center-aligned counting mode cannot be used in this mode and the CAM[1:0] = 2'b00(in TIMERx_CTL0 register);
2) When counter counting up (DIR = 0 in TIMERx_CTL0 register), the value of TIMERx_CHxCV/ TIMERx_MCHxCV should be set to 0; When counting down (DIR =1 in TIMERx_CTL0 register), the value of TIMERx_CHxCV/ TIMERx_MCHxCV should be greater than or equal to the value of TIMERx_CAR register.

Figure 24-44. delayable single pulse mode with TIMERx_CHxCV=0x00, TIMERx_CAR=0x60

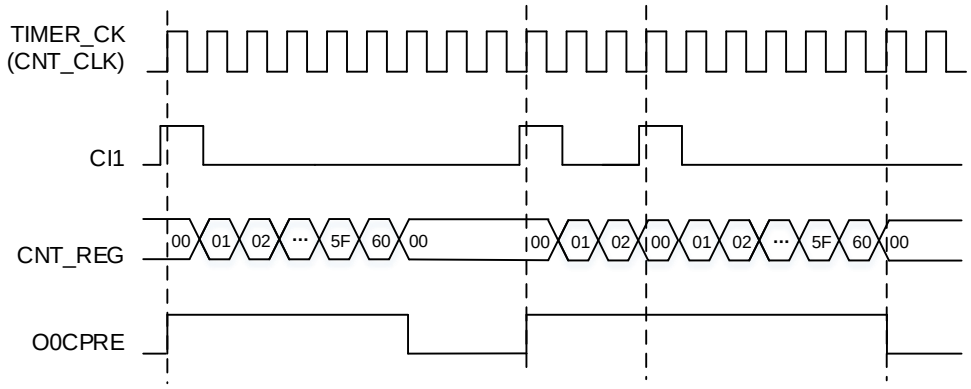

Timers interconnection

The timers can be internally connected for timer chaining or synchronization. This can be implemented by configuring one timer to operate in the master mode while configuring another timer to be in the slave mode. The following figures show several examples of trigger selection for the master mode and slave mode.

Some interconnection examples:

- TIMER2 as the prescaler for TIMER0

TIMER2 is configured as a prescaler for TIMER0, steps are shown as follows:

1. Configure TIMER2 in master mode and select its update event (UPE) as trigger output (MMC0=3'b010 in the TIMER2_CTL1 register). Then TIMER2 drives a periodic signal on each counter overflow.
2. Configure TIMER2 period (TIMER2_CAR register).
3. Configure TIMER0 in external clock mode 0 and select the TIMER2 as TIMER0 input trigger source (TRCFG6[4:0] = 5b'00011 in the_SYSCFG_TIMER0CFG1 register).
4. Start TIMER0 by writing '1' to the CEN bit (TIMER0_CTL0 register).
5. Start TIMER2 by writing '1' to the CEN bit (TIMER2_CTL0 register).

- Start TIMER0 with TIMER2's enable/update signal

First, enable TIMER0 with the enable signal of TIMER2. Refer to ***Figure 24-45. Trigger mode of TIMER0 controlled by enable signal of TIMER2***. TIMER0 starts counting from its current

value with the divided internal clock after being triggered by TIMER2 enable signal output.

When TIMER0 receives the trigger signal, its CEN bit is set automatically and the counter counts until TIMER0 is disabled. Both clock frequency of the counters is divided by 3 from TIMER_CK ($f_{PSC_CLK} = f_{TIMER_CK}$ /3). Steps are shown as follows:

1. Configure TIMER2 in master mode to send its enable signal as trigger output (MMC0=3'b001 in the TIMER2_CTL1 register).
2. Configure TIMER0 in event mode and select the TIMER2 as TIMER0 input trigger source (TRCFG5[4:0] = 5b'00011 in the_SYSCFG_TIMER0CFG0 register).
3. Start TIMER2 by writing 1 to the CEN bit (TIMER2_CTL0 register).

Figure 24-45. Trigger mode of TIMER0 controlled by enable signal of TIMER2

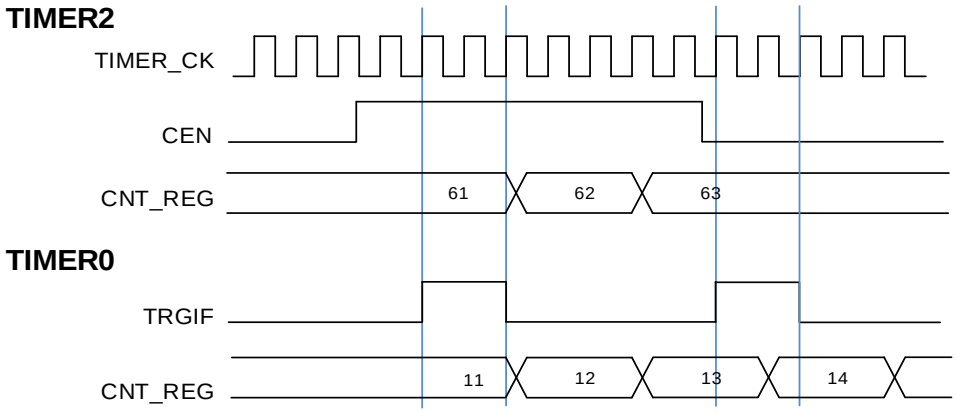

In this example, the update event can also be used as trigger source instead of enable signal. Refer to ***Figure 24-46. Trigger mode of TIMER0 controlled by update signal of TIMER2***. Steps are shown as follows:

1. Configure TIMER2 in master mode to send its update event (UPE) as trigger output (MMC0=3'b010 in the TIMER2_CTL1 register).
2. Configure the TIMER2 period (TIMER2_CARL registers).
3. Configure TIMER0 in event mode and select the TIMER2 as TIMER0 input trigger source (TRCFG5[4:0] = 5b'00011 in the_SYSCFG_TIMER0CFG0 register).
4. Start TIMER2 by writing '1' to the CEN bit (TIMER2_CTL0 register).

Figure 24-46. Trigger mode of TIMER0 controlled by update signal of TIMER2

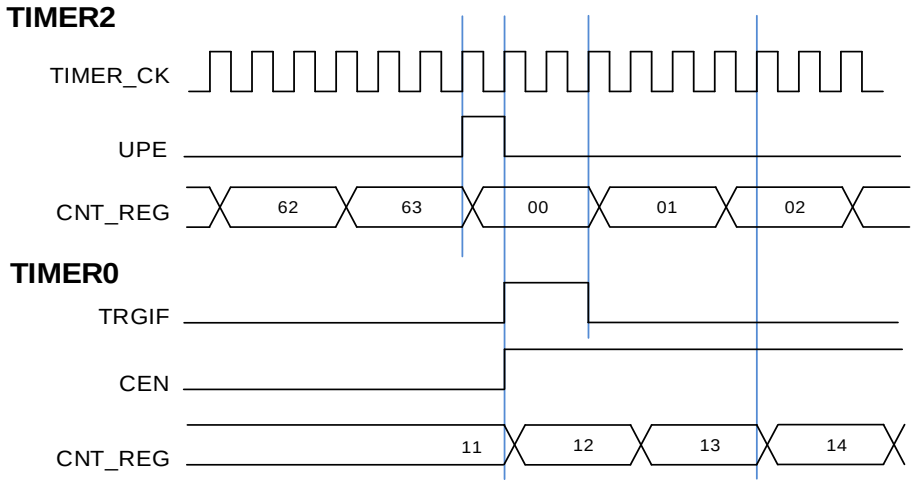

- Enable TIMER0 to count with the enable/O0CPRE signal of TIMER2.

In this example, TIMER0 is enabled with the enable signal of TIMER2. Refer to ***Figure 24-47. Pause mode of TIMER0 controlled by enable signal of TIMER2***. TIMER0 counts with the divided internal clock only when TIMER2 is enabled. Both clock frequency of the counters is divided by 3 from TIMER_CK ($f_{PSC_CLK} = f_{TIMER_CK}/3$). Steps are shown as follows:

1. Configure TIMER2 in master mode and output enable signal as trigger output (MMC0=3'b001 in the TIMER2_CTL1 register).
2. Configure TIMER0 in pause mode and select the TIMER2 as TIMER0 input trigger source (TRCFG4[4:0] = 5b'00011 in the_SYSCFG_TIMER0CFG0 register).
3. Enable TIMER0 by writing '1' to the CEN bit (TIMER0_CTL0 register).
4. Start TIMER2 by writing '1' to the CEN bit (TIMER2_CTL0 register).
5. Stop TIMER2 by writing '0' to the CEN bit (TIMER2_CTL0 register).

Figure 24-47. Pause mode of TIMER0 controlled by enable signal of TIMER2

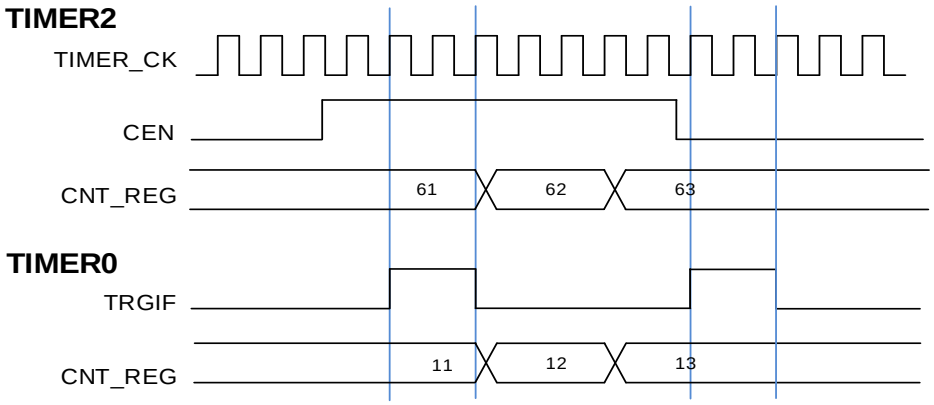

In this example, O0CPRE can also be used as trigger source instead of enable signal output. Steps are shown as follows:

1. Configure TIMER2 in master mode and O0CPRE as trigger output (MMS=3'b100 in the

TIMER2_CTL1 register).

2. Configure the TIMER2 O0CPRE waveform (TIMER2_CHCTL0 register).
3. Configure TIMER0 in pause mode and select the TIMER2 as TIMER0 input trigger source (TRCFG4[4:0] = 5b'00011 in the_SYSCFG_TIMER0CFG0 register).
4. Enable TIMER0 by writing '1' to the CEN bit (TIMER0_CTL0 register).
5. Start TIMER2 by writing '1' to the CEN bit (TIMER2_CTL0 register).

Figure 24-48. Pause mode of TIMER0 controlled by O0CPRE signal of TIMER2

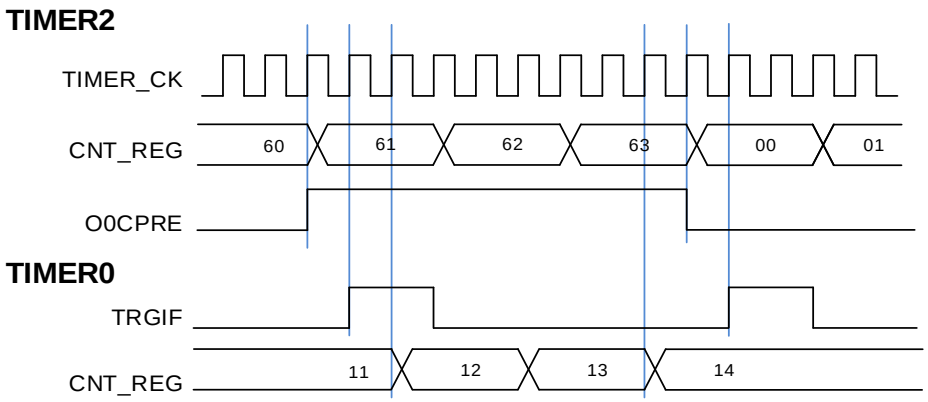

■ Using an external trigger to start two timers synchronously.

The start of TIMER0 is triggered by the enable signal of TIMER2, and TIMER2 is triggered by its CI0 input rising edge. To ensure that two timers start synchronously, TIMER2 must be configured in master/slave mode. Steps are shown as follows:

1. Configure TIMER2 in event mode and select the CI0F_ED as TIMER2 input trigger source (TRCFG5[4:0] = 5b'00101 in the_SYSCFG_TIMER2CFG0 register).
2. Configure TIMER2 in master/slave mode by writing MSM=1 (TIMER2_SMCFG register).
3. Configure TIMER0 in event mode and select the TIMER2 as TIMER0 input trigger source (TRCFG5[4:0] = 5b'00011 in the_SYSCFG_TIMER0CFG0 register).

When the CI0 signal of TIMER2 generates a rising edge, two timer counters start counting synchronously with the internal clock and both TRGIF flags are set.

Figure 24-49. Trigger TIMER0 and TIMER2 by the CI0 signal of TIMER2

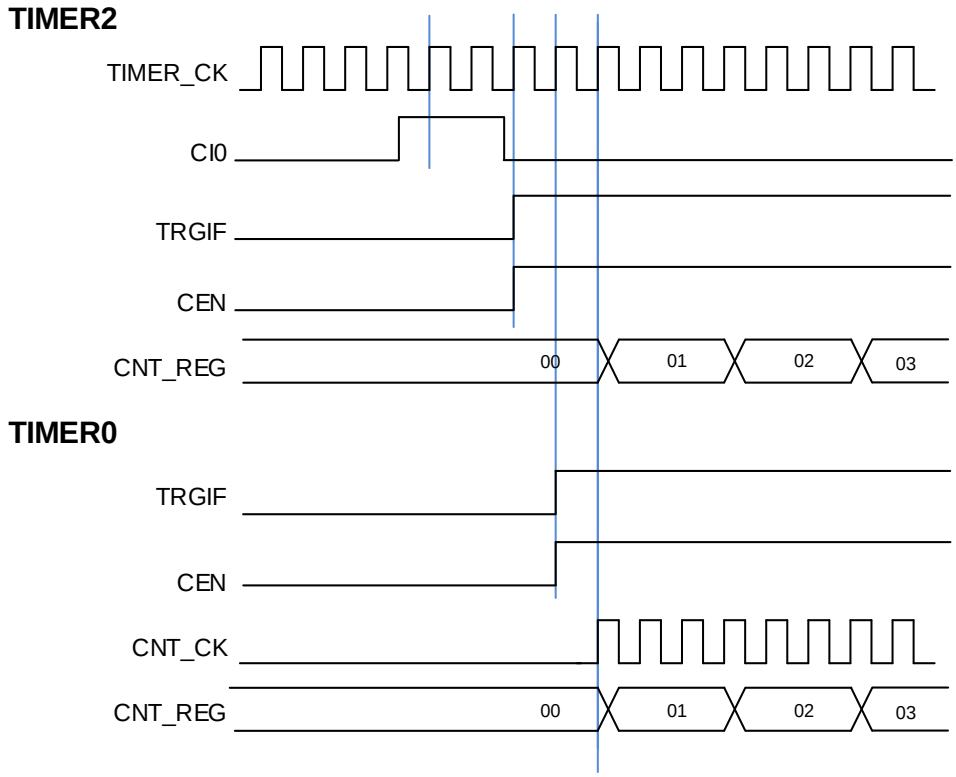

Timer DMA mode

Timer DMA mode is the function that configures timer's register by DMA module. The relative registers are TIMERx_DMACFG and TIMERx_DMATB. Corresponding DMA request bit should be asserted to enable DMA request for internal interrupt event. TIMERx will send a request to DMA when the interrupt event occurs. DMA is configured to M2P (memory to peripheral) mode and the address of TIMERx_DMATB is configured to PADDR (peripheral base address), then DMA will access the TIMERx_DMATB. In fact, TIMERx_DMATB register is only a buffer, timer will map the TIMERx_DMATB to an internal register, appointed by the field of DMATA in TIMERx_DMACFG. If the field of DMATC in TIMERx_DMACFG is 0 (1 transfer), the timer sends only one DMA request. While if TIMERx_DMATC is not 0, such as 3 (4 transfers), then timer will send 3 more requests to DMA, and DMA will access timer's registers DMATA+0x4, DMATA+0x8 and DMATA+0xC at the next 3 accesses to TIMERx_DMATB. In a word, one-time DMA internal interrupt event asserts, (DMATC+1) times request will be sent by TIMERx.

If one more DMA request event occurs, TIMERx will repeat the process above.

UPIF bit backup

The UPIF bit backup function is enabled by setting UPIFBUEN in the TIMERx_CTL0 register. The UPIF and UPIFBU bits are fully synchronized and without latency.

By using this function, the UPIF bit in the TIMERx_INTF register will be backuped to the UPIFBU bit in the TIMERx_CNT register. This can avoid conflicts when reading the counter

and interrupt processing.

Timer debug mode

When the Cortex®-M7 is halted, and the TIMERx_HOLD configuration bit in DBG_CTL register is set to 1, the TIMERx counter stops.

24.1.5. Registers definition (TIMERx, x=0, 7)

TIMER0 base address: 0x4001 0000

TIMER7 base address: 0x4001 0400

Control register 0 (TIMERx_CTL0)

Address offset: 0x00
Reset value: 0x0000 0000

This register has to be accessed by word (32-bit).

31	30	29	28	27	26	25	24	23	22	21	20	19	18	17	16
Reserved															

15	14	13	12	11	10	9	8	7	6	5	4	3	2	1	0
Reserved				UPIFBUEN	Reserved	CKDIV[1:0]		ARSE	CAM[1:0]		DIR	SPM	UPS	UPDIS	CEN
				rw		rw		rw	rw		rw	rw	rw	rw	rw

Bits	Fields	Descriptions
31:12	Reserved	Must be kept at reset value.
11	UPIFBUEN	UPIF bit backup enable 0: Backup disable. UPIF bit is not backuped to UPIFBU bit in TIMERx_CNT register. 1: Backup enabled. UPIF bit is backuped to UPIFBU bit in TIMERx_CNT register.
10	Reserved	Must be kept at reset value.
9:8	CKDIV[1:0]	Clock division The CKDIV bits can be configured by software to specify division ratio between CK_TIMER (the timer clock) and DTS (the dead time and sampling clock) which is used for the dead time generator and the digital filter. 00: $f_{DTS}= f_{CK_TIMER}$ 01: $f_{DTS}= f_{CK_TIMER}$ /2 10: $f_{DTS}= f_{CK_TIMER}$ /4 11: Reserved
7	ARSE	Auto-reload shadow enable 0: The shadow register for TIMERx_CAR register is disabled 1: The shadow register for TIMERx_CAR register is enabled
6:5	CAM[1:0]	Counter align mode selection 00: No center-aligned mode (edge-aligned mode). The direction of the counter is specified by the DIR bit. 01: Center-aligned and counting down assert mode. The counter counts in center-aligned mode and channel is configured in output mode (CHxMS = 3’b000 in

		TIMERx_CHCTL0 register). Only when the counter is counting down, compare interrupt flag of channels can be set. 10: Center-aligned and counting up assert mode. The counter counts in center-aligned mode and channel is configured in output mode (CHxMS = 3'b000 in TIMERx_CHCTL0 register). Only when the counter is counting up, compare interrupt flag of channels can be set. 11: Center-aligned and counting up/down assert mode. The counter counts in center-aligned mode and channel is configured in output mode (CHxMS = 3'b000 in TIMERx_CHCTL0 register). Both when the counter is counting up and counting down, compare interrupt flag of channels can be set. After the counter is enabled, these bits cannot be switched from 0x00 to non 0x00.
4	DIR	Direction 0: Count up 1: Count down This bit is read only when the timer is configured in center-aligned mode or decoder mode.
3	SPM	Single pulse mode 0: Single pulse mode is disabled. Counter continues after an update event. 1: Single pulse mode is enabled. The CEN bit is cleared by hardware and the counter stops at next update event.
2	UPS	Update source This bit is used to select the update event sources by software. 0: Any of the following events generates an update interrupt or a DMA request: – The UPG bit is set. – The counter generates an overflow or underflow event. – The slave mode controller generates an update event. 1: Only counter overflow/underflow generates an update interrupt or a DMA request.
1	UPDIS	Update disable This bit is used to enable or disable the update event generation. 0: Update event enable. The update event is generated and the buffered registers are loaded with their preloaded values when one of the following events occurs: – The UPG bit is set. – The counter generates an overflow or underflow event. – The slave mode controller generates an update event. 1: Update event disable. The buffered registers keep their value, while the counter and the prescaler are reinitialized if the UG bit is set or the slave mode controller generates a hardware reset event.
0	CEN	Counter enable 0: Counter disable 1: Counter enable The CEN bit must be set by software when timer works in external clock mode,

pause mode or decoder mode. While in event mode, the hardware can set the CEN bit automatically.

Control register 1 (TIMERx_CTL1)

Address offset: 0x04

Reset value: 0x0000 0000

This register has to be accessed by word (32-bit).

31	30	29	28	27	26	25	24	23	22	21	20	19	18	17	16
CCUC[2:1]		Reserved							MMC1[2:0]			Reserved			
rw										rw					

15	14	13	12	11	10	9	8	7	6	5	4	3	2	1	0
ISO3N	ISO3	ISO2N	ISO2	ISO1N	ISO1	ISO0N	ISO0	TI0S	MMC0[2:0]			DMAS	CCUC[0]	Reserved	CCSE
rw	rw	rw	rw	rw	rw	rw	rw	rw	rw			rw	rw		rw

Bits	Fields	Descriptions
31:30	CCUC[2:1]	Commutation control shadow register update control Refer to CCUC [0] description.
29:23	Reserved	Must be kept at reset value.
22: 20	MMC1[2:0]	Master mode control 1 These bits control the selection of TRGO1 signal. 000: Reset. When the UPG bit in the TIMERx_SWEVG register is set or a reset is generated by the slave mode controller, a TRGO1 pulse occurs. And in the latter case, the signal on TRGO1 is delayed compared to the actual reset. 001: Enable. This mode is used to start several timers at the same time or control a slave timer to be enabled in a period. In this mode, the master mode controller selects the counter enable signal as TRGO1. The counter enable signal is set when CEN control bit is set or the trigger input in pause mode is high. There is a delay between the trigger input in pause mode and the TRGO1 output, except if the master-slave mode is selected. 010: Update. In this mode, the master mode controller selects the update event as TRGO1. 011: Capture/compare pulse. In this mode, the master mode controller generates a TRGO1 pulse when a capture or a compare match occurs in channel 0. 100: Compare. In this mode, the master mode controller selects the O0CPRE signal as TRGO1. 101: Compare. In this mode, the master mode controller selects the O1CPRE signal as TRGO1. 110: Compare. In this mode, the master mode controller selects the O2CPRE signal as TRGO1. 111: Compare. In this mode, the master mode controller selects the O3CPRE signal as TRGO1.

		Note: The clock of the slave timer or ADC must be enabled prior to receive events from the master timer, and must not be changed on-the-fly while triggers are received from the master timer.
19:16	Reserved	Must be kept at reset value.
15	ISO3N	Idle state of multi mode channel 3 complementary output. Refer to ISO0N bit.
14	ISO3	Idle state of channel 3 output. Refer to ISO0 bit.
13	ISO2N	Idle state of multi mode channel 2 complementary output. Refer to ISO0N bit
12	ISO2	Idle state of channel 2 output Refer to ISO0 bit
11	ISO1N	Idle state of multi mode channel 1 complementary output Refer to ISO0N bit
10	ISO1	Idle state of channel 1 output Refer to ISO0 bit
9	ISO0N	Idle state of multi mode channel 0 complementary output 0: When POEN bit is reset, MCH0_O is set low. 1: When POEN bit is reset, MCH0_O is set high. This bit can be modified only when PROT[1:0] bits in TIMERx_CCHP register is 00.
8	ISO0	Idle state of channel 0 output 0: When POEN bit is reset, CH0_O is set low. 1: When POEN bit is reset, CH0_O is set high. The CH0_O output changes after a dead time if MCH0_O is implemented. This bit can be modified only when PROT[1:0] bits in TIMERx_CCHP register is 00.
7	TI0S	Channel 0 trigger input selection 0: The TIMERx_CH0 pin input is selected as channel 0 trigger input. 1: The result of combinational XOR of TIMERx_CH0, TIMERx_CH1 and TIMERx_CH2 pins is selected as channel 0 trigger input.
6:4	MMC0[2:0]	Master mode control 0 These bits control the selection of TRGO0 signal, which is sent by master timer to slave timer for synchronization function. 000: Reset. When the UPG bit in the TIMERx_SWEVG register is set or a reset is generated by the slave mode controller, a TRGO pulse occurs. And in the latter case, the signal on TRGO0 is delayed compared to the actual reset. 001: Enable. This mode is used to start several timers at the same time or control a slave timer to be enabled in a period. In this mode, the master mode controller selects the counter enable signal as TRGO0. The counter enable signal is set when

		CEN control bit is set or the trigger input in pause mode is high. There is a delay between the trigger input in pause mode and the TRGO0 output, except if the master-slave mode is selected. 010: Update. In this mode, the master mode controller selects the update event as TRGO0. 011: Capture/compare pulse. In this mode, the master mode controller generates a TRGO0 pulse when a capture or a compare match occurs in channel 0. 100: Compare. In this mode, the master mode controller selects the O0CPRE signal as TRGO0. 101: Compare. In this mode, the master mode controller selects the O1CPRE signal as TRGO0. 110: Compare. In this mode, the master mode controller selects the O2CPRE signal as TRGO0. 111: Compare. In this mode, the master mode controller selects the O3CPRE signal as TRGO0.
3	DMAS	DMA request source selection 0: DMA request of CHx/MCHx is sent when capture/compare event occurs. 1: DMA request of channel CHx/MCHx is sent when update event occurs.
2	CCUC[0]	Commutation control shadow register update control The CCUC[2:1] and CCUC[0] field are used to control the commutation control shadow register update. When the commutation control shadow registers (for CHxEN, MCHxEN and CHxCOMCTL bits) are enabled (CCSE=1), the update control of the shadow registers with the CCUC[2:0] bit-field are shown as below: 000: The shadow registers update when CMTG bit is set. 001: The shadow registers update when CMTG bit is set or a rising edge of TRGI occurs. 100: The shadow registers update when the counter generates an overflow event. 101: The shadow registers update when the counter generates an underflow event. 110: The shadow registers update when the counter generates an overflow or underflow event. Others: Reserved When a channel does not have a complementary output, this bit has no effect. **Note**: When CCUC[2:0] bit-field are set to 100, 101 and 110, the update of the shadow registers also considers the value the CCUSEL bit in the TIMERx_CFG register.
1	Reserved	Must be kept at reset value.
0	CCSE	Commutation control shadow enable 0: The shadow registers (for CHxEN, MCHxEN and CHxCOMCTL bits) are disabled. 1: The shadow registers (for CHxEN, MCHxEN and CHxCOMCTL bits) are enabled. After these bits have been written, they are updated when commutation event comes.

When a channel does not have a complementary output, this bit has no effect.

Slave mode configuration register (TIMERx_SMCFG)

Address offset: 0x08

Reset value: 0x0000 0000

This register has to be accessed by word (32-bit).

31	30	29	28	27	26	25	24	23	22	21	20	19	18	17	16
Reserved															

15	14	13	12	11	10	9	8	7	6	5	4	3	2	1	0
ETP	SMC1	ETPSC[1:0]		ETFC[3:0]				MSM	Reserved						
rw	rw	rw		rw				rw							

Bits	Fields	Descriptions
31:16	Reserved	Must be kept at reset value.
15	ETP	External trigger polarity This bit specifies the polarity of ETI signal. 0: ETI is active at high level or rising edge. 1: ETI is active at low level or falling edge.
14	SMC1	Part of slave mode controller is used to enable external clock mode 1 In external clock mode 1, the counter is clocked by any active edge of the ETIFP signal. 0: External clock mode 1 disabled 1: External clock mode 1 enabled It is possible to simultaneously use external clock mode 1 with the restart mode, pause mode or event mode. But the TSCFGy[4:0](y=3,4,5) bits must not be 5b'01000 in this case. The external clock input will be ETIFP if external clock mode 0 and external clock mode 1 are enabled at the same time. **Note:** External clock mode 0 enable is in TSCFG6[4:0] bit-field in SYSCFG_TIMERxCFG1 register.
13:12	ETPSC[1:0]	External trigger prescaler The frequency of external trigger signal ETIFP must not be higher than 1/4 of TIMER_CK frequency. When the frequency of external trigger signal is high, the prescaler can be enabled to reduce ETIFP frequency. 00: Prescaler disabled 01: ETIFP frequency divided by 2 10: ETIFP frequency divided by 4 11: ETIFP frequency divided by 8
11:8	ETFC[3:0]	External trigger filter control

		An event counter is used in the digital filter, in which a transition on the output occurs after N input events. This bit-field specifies the frequency used to sample ETIFP signal and the length of the digital filter applied to ETIFP. 0000: Filter disabled. f_{SAMP}= f_{DTS}, N=1. 0001: f_{SAMP}= f_{CK_TIMER}, N=2. 0010: f_{SAMP}= f_{CK_TIMER}, N=4. 0011: f_{SAMP}= f_{CK_TIMER}, N=8. 0100: f_{SAMP}=f_{DTS}/2, N=6. 0101: f_{SAMP}=f_{DTS}/2, N=8. 0110: f_{SAMP}=f_{DTS}/4, N=6. 0111: f_{SAMP}=f_{DTS}/4, N=8. 1000: f_{SAMP}=f_{DTS}/8, N=6. 1001: f_{SAMP}=f_{DTS}/8, N=8. 1010: f_{SAMP}=f_{DTS}/16, N=5. 1011: f_{SAMP}=f_{DTS}/16, N=6. 1100: f_{SAMP}=f_{DTS}/16, N=8. 1101: f_{SAMP}=f_{DTS}/32, N=5. 1110: f_{SAMP}=f_{DTS}/32, N=6. 1111: f_{SAMP}=f_{DTS}/32, N=8.
7	MSM	Master-slave mode This bit can be used to synchronize the selected timers to begin counting at the same time. The TRGI is used as the start event, and through TRGO, timers are connected. 0: Master-slave mode disabled 1: Master-slave mode enabled
6:0	Reserved	Must be kept at reset value.

DMA and interrupt enable register (TIMERx_DMAINTEN)

Address offset: 0x0C
Reset value: 0x0000 0000

This register has to be accessed by word (32-bit).

31	30	29	28	27	26	25	24	23	22	21	20	19	18	17	16
CH3COMADDIE	CH2COMADDIE	CH1COMADDIE	CH0COMADDIE	MCH3DEN	MCH2DEN	MCH1DEN	MCH0DEN	MCH3IE	MCH2IE	MCH1IE	MCH0IE	Reserved		DECDISIE	DECJIE
rw	rw	rw	rw	rw	rw	rw	rw	rw	rw	rw	rw			rw	rw

15	14	13	12	11	10	9	8	7	6	5	4	3	2	1	0
Reserved	TRGDEN	CMTDEN	CH3DEN	CH2DEN	CH1DEN	CH0DEN	UPDEN	BRKIE	TRGIE	CMTIE	CH3IE	CH2IE	CH1IE	CH0IE	UPIE
	rw	rw	rw	rw	rw	rw	rw	rw	rw	rw	rw	rw	rw	rw	rw

Bits	Fields	Descriptions
31	CH3COMADDIE	Channel 3 additional compare interrupt enable

		0: Disabled 1: Enabled **Note:** This bit just used in composite PWM mode.
30	CH2COMADDIE	Channel 2 additional compare interrupt enable 0: Disabled 1: Enabled **Note:** This bit just used in composite PWM mode.
29	CH1COMADDIE	Channel 1 additional compare interrupt enable 0: Disabled 1: Enabled **Note:** This bit just used in composite PWM mode.
28	CH0COMADDIE	Channel 0 additional compare interrupt enable 0: Disabled 1: Enabled **Note:** This bit just used in composite PWM mode.
27	MCH3DEN	Multi mode channel 3 capture/compare DMA request enable 0: Disabled 1: Enabled **Note:** This bit just used for channel input and output independent mode (when MCH3MSEL[1:0] = 2b'00).
26	MCH2DEN	Multi mode channel 2 capture/compare DMA request enable 0: Disabled 1: Enabled **Note:** This bit just used for channel input and output independent mode (when MCH2MSEL[1:0] = 2b'00).
25	MCH1DEN	Multi mode channel 1 capture/compare DMA request enable 0: Disabled 1: Enabled **Note:** This bit just used for channel input and output independent mode (when MMCH1SEL[1:0] = 2b'00).
24	MCH0DEN	Multi mode channel 0 capture/compare DMA request enable 0: Disabled 1: Enabled **Note:** This bit just used for channel input and output independent mode (when MMCH0SEL[1:0] = 2b'00).
23	MCH3IE	Multi mode channel 3 capture/compare interrupt enable 0: Disabled 1: Enabled **Note:** This bit just used for channel input and output independent mode (when

		MCH3MSEL[1:0] = 2b'00).
22	MCH2IE	Multi mode channel 2 capture/compare interrupt enable 0: Disabled 1: Enabled **Note:** This bit just used for channel input and output independent mode (when MCH2MSEL[1:0] = 2b'00).
21	MCH1IE	Multi mode channel 1 capture/compare interrupt enable 0: Disabled 1: Enabled **Note:** This bit just used for channel input and output independent mode (when MMCH1SEL[1:0] = 2b'00).
20	MCH0IE	Multi mode channel 0 capture/compare interrupt enable 0: Disabled 1: Enabled **Note:** This bit just used for channel input and output independent mode (when MMCH0SEL[1:0] = 2b'00).
19:18	Reserved	Must be kept at reset value.
17	DECDISIE	Quadrature decoder signal disconnection interrupt enable 0: Disabled 1: Enabled **Note:** This bit just used for quadrature decoder signal disconnection detection is enabled (when DECDISDEN =1).
16	DECJIE	Quadrature decoder signal jump (the two signals jump at the same time) interrupt enable 0: Disabled 1: Enabled **Note:** This bit just used for quadrature decoder signal jump detection is enabled (when DECJDEN =1).
15	Reserved	Must be kept at reset value.
14	TRGDEN	Trigger DMA request enable 0: Disabled 1: Enabled
13	CMTDEN	Commutation DMA request enable 0: Disabled 1: Enabled
12	CH3DEN	Channel 3 capture/compare DMA request enable 0: Disabled 1: Enabled

11	CH2DEN	Channel 2 capture/compare DMA request enable 0: Disabled 1: Enabled
10	CH1DEN	Channel 1 capture/compare DMA request enable 0: Disabled 1: Enabled
9	CH0DEN	Channel 0 capture/compare DMA request enable 0: Disabled 1: Enabled
8	UPDEN	Update DMA request enable 0: Disabled 1: Enabled
7	BRKIE	Break interrupt enable 0: Disabled 1: Enabled
6	TRGIE	Trigger interrupt enable 0: Disabled 1: Enabled
5	CMTIE	Commutation interrupt enable 0: Disabled 1: Enabled
4	CH3IE	Channel 3 capture/compare interrupt enable 0: Disabled 1: Enabled
3	CH2IE	Channel 2 capture/compare interrupt enable 0: Disabled 1: Enabled
2	CH1IE	Channel 1 capture/compare interrupt enable 0: Disabled 1: Enabled
1	CH0IE	Channel 0 capture/compare interrupt enable 0: Disabled 1: Enabled
0	UPIE	Update interrupt enable 0: Disabled 1: Enabled

Interrupt flag register (TIMERx_INTF)

Address offset: 0x10

Reset value: 0x0000 0000

This register has to be accessed by word (32-bit).

31	30	29	28	27	26	25	24	23	22	21	20	19	18	17	16
CH3COMADDIF	CH2COMADDIF	CH1COMADDIF	CH0COMADDIF	MCH3OF	MCH2OF	MCH1OF	MCH0OF	MCH3IF	MCH2IF	MCH1IF	MCH0IF	Reserved		DECDISIF	DECJIF
rc_w0	rc_w0	rc_w0	rc_w0	rc_w0	rc_w0	rc_w0	rc_w0	rc_w0	rc_w0	rc_w0	rc_w0			rc_w0	rc_w0

15	14	13	12	11	10	9	8	7	6	5	4	3	2	1	0
Reserved		SYSBIF	CH3OF	CH2OF	CH1OF	CH0OF	BRK1IF	BRK0IF	TRGIF	CMTIF	CH3IF	CH2IF	CH1IF	CH0IF	UPIF
		rc_w0	rc_w0	rc_w0	rc_w0	rc_w0	. rc_w0	rc_w0	rc_w0	rc_w0	rc_w0	rc_w0	rc_w0	rc_w0	rc_w0

Bits	Fields	Descriptions
31	CH3COMADDIF	Channel 3 additional compare interrupt flag. Refer to CH0COMADDIF description.
30	CH2COMADDIF	Channel 2 additional compare interrupt flag. Refer to CH0COMADDIF description.
29	CH1COMADDIF	Channel 1 additional compare interrupt flag. Refer to CH0COMADDIF description.
28	CH0COMADDIF	Channel 0 additional compare interrupt flag. This flag is set by hardware and cleared by software. If channel 0 is in output mode, this flag is set when a compare event occurs. 0: No channel 0 output compare interrupt occurred 1: Channel 0 output compare interrupt occurred **Note:** This flag just used in composite PWM mode.
27	MCH3OF	Multi mode channel 3 over capture flag Refer to MCH0OF description.
26	MCH2OF	Multi mode channel 2 over capture flag Refer to MCH0OF description.
25	MCH1OF	Multi mode channel 1 over capture flag Refer to MCH0OF description.
24	MCH0OF	Multi mode channel 0 over capture flag When multi mode channel 0 is configured in input mode, this flag is set by hardware when a capture event occurs while MCH0IF flag has already been set. This flag is cleared by software. 0: No over capture interrupt occurred 1: Over capture interrupt occurred
23	MCH3IF	Multi mode channel 3 capture/compare interrupt flag

		Refer to MCH0IF description
22	MCH2IF	Multi mode channel 2 capture/compare interrupt flag Refer to MCH0IF description
21	MCH1IF	Multi mode channel 1 capture/compare interrupt flag Refer to MCH0IF description
20	MCH0IF	Multi mode channel 0 capture/compare interrupt flag This flag is set by hardware and cleared by software. If multi mode channel 0 is in input mode, this flag is set when a capture event occurs. If multi mode channel 0 is in output mode, this flag is set when a compare event occurs. If multi mode channel 0 is set to input mode, this bit will be reset by reading TIMERx_MCH0CV. 0: No multi mode channel 0 capture/compare interrupt occurred 1: Multi mode channel 0 capture/compare interrupt occurred
19:18	Reserved	Must be kept at reset value.
17	DECDISIF	Quadrature decoder signal disconnection interrupt flag 0: No quadrature decoder signal disconnection interrupt occurred 1: Quadrature decoder signal disconnection interrupt occurred **Note:** This bit just used for quadrature decoder signal disconnection detection is enabled (when DECDISDEN =1).
16	DECJIF	Quadrature decoder signal jump (the two signals jump at the same time) interrupt flag 0: No quadrature decoder signal jump interrupt occurred 1: Quadrature decoder signal jump interrupt occurred **Note:** This bit just used for quadrature decoder signal jump detection is enabled (when DECJDEN =1).
15:14	Reserved	Must be kept at reset value.
13	SYSBIF	System source break interrupt flag This flag is set by hardware when the system sources are active, and cleared by software if the system sources are inactive. 0: No system source break interrupt occurred 1: System source break interrupt occurred **Note**: When this bit is set, this bit must be cleared by software before the channel outputs are restored.
12	CH3OF	Channel 3 over capture flag Refer to CH0OF description
11	CH2OF	Channel 2 over capture flag Refer to CH0OF description

10	CH1OF	Channel 1 over capture flag Refer to CH0OF description
9	CH0OF	Channel 0 over capture flag When channel 0 is configured in input mode, this flag is set by hardware when a capture event occurs while CH0IF flag has already been set. This flag is cleared by software. 0: No over capture interrupt occurred 1: Over capture interrupt occurred
8	BRK1IF	BREAK1 interrupt flag This flag is set by hardware as soon as the BREAK1 input is active, and cleared by software if the BREAK1 input is not at active level. 0: No active level on BREAK1 inputs has been detected. 1: An active level on BREAK1 inputs has been detected. An interrupt is generated if BRKIE=1 in the TIMERx_DMAINTEN register.
7	BRK0IF	BREAK0 interrupt flag This flag is set by hardware when the BREAK0 input is active, and cleared by software if the BREAK0 input is not at active level. 0: No active level on break input has been detected. 1: An active level on break input has been detected.
6	TRGIF	Trigger interrupt flag This flag is set by hardware on trigger event and cleared by software. When the slave mode controller is enabled in all modes but pause mode, an active edge of trigger input generates a trigger event. When the slave mode controller is enabled in pause mode, either edge of the trigger input can generate a trigger event. 0: No trigger event occurred 1: Trigger interrupt occurred
5	CMTIF	Channel commutation interrupt flag This flag is set by hardware when the commutation event of channel occurs, and cleared by software. 0: No channel commutation interrupt occurred 1: Channel commutation interrupt occurred
4	CH3IF	Channel 3 capture/compare interrupt flag Refer to CH0IF description
3	CH2IF	Channel 2 capture/compare interrupt flag Refer to CH0IF description
2	CH1IF	Channel 1 capture/compare interrupt flag Refer to CH0IF description
1	CH0IF	Channel 0 capture/compare interrupt flag This flag is set by hardware and cleared by software.

		If channel 0 is in input mode, this flag is set when a capture event occurs. If channel 0 is in output mode, this flag is set when a compare event occurs. If channel 0 is set to input mode, this bit will be reset by reading TIMERx_CH0CV. 0: No channel 0 interrupt occurred 1: Channel 0 interrupt occurred
0	UPIF	Update interrupt flag This bit is set by hardware when an update event occurs and cleared by software. 0: No update interrupt occurred 1: Update interrupt occurred

Software event generation register (TIMERx_SWEVG)

Address offset: 0x14

Reset value: 0x0000 0000

This register has to be accessed by word (32-bit).

31	30	29	28	27	26	25	24	23	22	21	20	19	18	17	16
CH3COMADDG	CH2COMADDG	CH1COMADDG	CH0COMADDG	Reserved				MCH3G	MCH2G	MCH1G	MCH0G	Reserved			
w	w	w	w					w	w	w	w				

15	14	13	12	11	10	9	8	7	6	5	4	3	2	1	0
Reserved							BRK1G	BRK0G	TRGG	CMTG	CH3G	CH2G	CH1G	CH0G	UPG
							w	w	w	w	w	w	w	w	w

Bits	Fields	Descriptions
31	CH3COMADDG	Channel 3 additional compare event generation. Refer to CH0COMADDG description.
30	CH2COMADDG	Channel 2 additional compare event generation. Refer to CH0COMADDG description.
29	CH1COMADDG	Channel 1 additional compare event generation. Refer to CH0COMADDG description.
28	CH0COMADDG	Channel 0 additional compare event generation. This bit is set by software to generate a compare event in channel 0 additional, it is automatically cleared by hardware. When this bit is set, the CH0COMADDIF flag will be set, and the corresponding interrupt will be sent if enabled. 0: No generate a channel 0 additional compare event 1: Generate a channel 0 additional compare event **Note:** This bit just used in composite PWM mode.
27:24	Reserved	Must be kept at reset value.
23	MCH3G	Multi mode channel 3 capture or compare event generation.

		Refer to MCH0G description.
22	MCH2G	Multi mode channel 2 capture or compare event generation. Refer to MCH0G description.
21	MCH1G	Multi mode channel 1 capture or compare event generation. Refer to MCH0G description.
20	MCH0G	Multi mode channel 0 capture or compare event generation. This bit is set by software to generate a capture or compare event in multi mode channel 0, it is automatically cleared by hardware. When this bit is set, the MCH0IF flag will be set, and the corresponding interrupt or DMA request will be sent if enabled. In addition, if multi mode channel 0 is configured in input mode, the current value of the counter is captured to TIMERx_MCH0CV register, and the MCH0OF flag is set if the MCH0IF flag has been set. 0: No generate a multi mode channel 0 capture or compare event 1: Generate a multi mode channel 0 capture or compare event
19:9	Reserved	Must be kept at reset value.
8	BRK1G	BREAK1 event generation This bit is set by software to generate an event and cleared by hardware automatically. When this bit is set, the POEN bit will be cleared and BRK1IF flag will be set. 0: No generate a BREAK1 event 1: Generate a BREAK1 event
7	BRK0G	BREAK0 event generation This bit is set by software to generate an event and cleared by hardware automatically. When this bit is set, the POEN bit will be cleared and BRK0IF flag will be set. 0: No generate a BREAK0 event 1: Generate a BREAK0 event
6	TRGG	Trigger event generation This bit is set by software and cleared by hardware automatically. When this bit is set, the TRGIF flag in TIMERx_INTF register will be set, related interrupt or DMA transfer can occur if enabled. 0: No generate a trigger event 1: Generate a trigger event
5	CMTG	Channel commutation event generation This bit is set by software and cleared by hardware automatically. When this bit is set, channel's capture/compare control registers (CHxEN, MCHxEN and CHxCOMCTL bits) are updated based on the value of CCSE (in the TIMERx_CTL1). 0: No affect

		1: Generate channel commutation update event
4	CH3G	Channel 3 capture or compare event generation Refer to CH0G description
3	CH2G	Channel 2 capture or compare event generation Refer to CH0G description
2	CH1G	Channel 1 capture or compare event generation Refer to CH0G description
1	CH0G	Channel 0 capture or compare event generation This bit is set by software to generate a capture or compare event in channel 0, it is automatically cleared by hardware. When this bit is set, the CH0IF flag will be set, and the corresponding interrupt or DMA request will be sent if enabled. In addition, if channel 0 is configured in input mode, the current value of the counter is captured to TIMERx_CH0CV register, and the CH0OF flag is set if the CH0IF flag has been set. 0: No generate a channel 0 capture or compare event 1: Generate a channel 0 capture or compare event
0	UPG	Update event generation This bit can be set by software, and automatically cleared by hardware. When this bit is set, the counter is cleared if the center-aligned or up counting mode is selected, while in down counting mode it takes the auto-reload value. The prescaler counter is cleared at the same time. 0: No generate an update event 1: Generate an update event

Channel control register 0 (TIMERx_CHCTL0)

Address offset: 0x18

Reset value: 0x0000 0000

This register has to be accessed by word (32-bit).

31	30	29	28	27	26	25	24	23	22	21	20	19	18	17	16
CH1MS[2]	CH0MS[2]	CH1COMADDSEN	CH0COMADDSEN	Reserved			CH1COMCTL[3]	Reserved							CH0COMCTL[3]
		Reserved	Reserved				Reserved								Reserved
rw	rw	rw	rw				rw								rw

15	14	13	12	11	10	9	8	7	6	5	4	3	2	1	0
CH1COMCEN	CH1COMCTL[2:0]			CH1COMSEN	Reserved	CH1MS[1:0]		CH0COMCEN	CH0COMCTL[2:0]			CH0COMSEN	Reserved	CH0MS[1:0]	
CH1CAPFLT[3:0]				CH1CAPPSC[1:0]				CH0CAPFLT[3:0]				CH0CAPPSC[1:0]			
rw				rw		rw		rw				rw		rw	

Output compare mode:

Bits	Fields	Descriptions
31	CH1MS[2]	Channel 1 I/O mode selection Refer to CH1MS[1:0]description
30	CH0MS[2]	Channel 0 I/O mode selection Refer to CH0MS[1:0] description
29	CH1COMADDSEN	Channel 1 additional compare output shadow enable Refer to CH0COMADDSEN description.
28	CH0COMADDSEN	Channel 0 additional compare output shadow enable When this bit is set, the shadow register of TIMERx_CH0COMV_ADD register which updates at each update event will be enabled. 0: Channel 0 additional compare output shadow disabled 1: Channel 0 additional compare output shadow enabled The PWM mode can be used without validating the shadow register only in single pulse mode (SPM bit in TIMERx_CTL0 register is set). This bit cannot be modified when PROT[1:0] bit-field in TIMERx_CCHP register is 11 and CH0MS bit-field is 000.
27:25	Reserved	Must be kept at reset value.
24	CH1COMCTL[3]	Channel 1 compare output control Refer to CH0COMCTL[2:0] description
23:17	Reserved	Must be kept at reset value.
16	CH0COMCTL[3]	Channel 0 compare output control Refer to CH0COMCTL[2:0] description
15	CH1COMCEN	Channel 1 output compare clear enable Refer to CH0COMCEN description
14:12	CH1COMCTL[2:0]	Channel 1 compare output control Refer to CH0COMCTL[2:0] description
11	CH1COMSEN	Channel 1 output compare shadow enable Refer to CH0COMSEN description
10	Reserved	Must be kept at reset value.
9:8	CH1MS[1:0]	Channel 1 mode selection This bit-field specifies the direction of the channel and the input signal selection. The CH1MS[2:0] bit-field is writable only when the channel is not active (When MCH1MSEL[1:0] = 2b'00, the CH1EN bit in TIMERx_CHCTL2 register is reset; when MCH1MSEL[1:0] = 2b'11, the CH1EN and MCH1EN bits in TIMERx_CHCTL2 register are reset). 000: Channel 1 is configured as output. 001: Channel 1 is configured as input, IS1 is connected to CI1FE1. 010: Channel 1 is configured as input, IS1 is connected to CI0FE1.

		011: Channel 1 is configured as input, IS1 is connected to ITS. This mode is working only if an internal trigger input is selected (through TSCFG15[4:0] bit-field in SYSCFG_TIMERxCFG2(x=0,7) register). 100: Channel 1 is configured as input, IS1 is connected to MCI1FE1. 101~111: Reserved.
7	CH0COMCEN	Channel 0 output compare clear enable When this bit is set, the O0CPRE signal is cleared when high level is detected on ETIFP input. 0: Channel 0 output compare clear disabled 1: Channel 0 output compare clear enabled
6:4	CH0COMCTL[2:0]	Channel 0 compare output control The CH0COMCTL[3] and CH0COMCTL[2:0] bit-field control the behavior of O0CPRE which drives CH0_O. The active level of O0CPRE is high, while the active level of CH0_O depends on CH0P bit. **Note**: When multi mode channel 0 is configured in output mode, and the MCH0MSEL[1:0] = 2b'11, This bit-field controls the behavior of O0CPRE which drives CH0_O and MCH0_O. The active level of O0CPRE is high, while the active level of CH0_O and MCH0_O depends on CH0P and MCH0P bits. 0000: Timing mode. The O0CPRE signal keeps stable, independent of the comparison between the register TIMERx_CH0CV and the counter TIMERx_CNT. 0001: Set the channel output on match. O0CPRE signal is forced high when the counter matches the output compare register TIMERx_CH0CV. 0010: Clear the channel output on match. O0CPRE signal is forced low when the counter matches the output compare register TIMERx_CH0CV. 0011: Toggle on match. O0CPRE toggles when the counter matches the output compare register TIMERx_CH0CV. 0100: Force low. O0CPRE is forced low level. 0101: Force high. O0CPRE is forced high level. 0110: PWM mode 0. When counting up, O0CPRE is active as long as the counter is smaller than TIMERx_CH0CV, otherwise it is inactive. When counting down, O0CPRE is inactive as long as the counter is larger than TIMERx_CH0CV, otherwise it is active. 0111: PWM mode 1. When counting up, O0CPRE is inactive as long as the counter is smaller than TIMERx_CH0CV, otherwise it is active. When counting down, O0CPRE is active as long as the counter is larger than TIMERx_CH0CV, otherwise it is inactive. 1000: Delayable SPM mode 0. The behavior of O0CPRE is performed as in PWM mode 0. When counting up, the O0CPRE is active. When a trigger event occurs, the O0CPRE is inactive. The O0CPRE is active again at the next update event; When counting down, the O0CPRE is inactive, when a trigger event occurs, the O0CPRE is active. The O0CPRE is inactive again at the next update event. 1001: Delayable SPM mode 1. The behavior of O0CPRE is performed as in PWM mode 1. When counting up, the O0CPRE is inactive, when a trigger event occurs,

		the O0CPRE is active. The O0CPRE is inactive again at the next update event; When counting down, the O0CPRE is active. When a trigger event occurs, the O0CPRE is inactive. The O0CPRE is active again at the next update event. 1010~1111: Reserved. **Note**: In the composite PWM mode (CH0CPWMEN = 1'b1 and CH0MS = 3'b000), the PWM signal output in channel 0 is composited by TIMERx_CH0CV and TIMERx_CH0COMV_ADD. Please refer to ***Composite PWM mode*** for more details. If configured in PWM mode, the O0CPRE level changes only when the output compare mode switches from "Timing" mode to "PWM" mode or the result of the comparison changes. When the outputs of CH0 and MCH0 are complementary, this bit-field is preloaded. If CCSE =1, this bit-field will only be updated when a channel commutation event is generated. This bit cannot be modified when PROT[1:0] bit-field in TIMERx_CCHP register is 11 and CH0MS bit-field is 000 (compare mode).
3	CH0COMSEN	Channel 0 compare output shadow enable When this bit is set, the shadow register of TIMERx_CH0CV register which updates at each update event will be enabled. 0: Channel 0 output compare shadow disabled 1: Channel 0 output compare shadow enabled The PWM mode can be used without validating the shadow register only in single pulse mode (SPM bit in TIMERx_CTL0 register is set). This bit cannot be modified when PROT[1:0] bit-field in TIMERx_CCHP register is 11 and CH0MS bit-field is 000.
2	Reserved	Must be kept at reset value.
1:0	CH0MS[1:0]	Channel 0 I/O mode selection This bit-field specifies the work mode of the channel and the input signal selection. The CH0MS[2:0] bit-field is writable only when the channel is not active (When MCH0MSEL[1:0] = 2b'00, the CH1EN bit in TIMERx_CHCTL2 register is reset; when MCH0MSEL[1:0] = 2b'11, the CH0EN and MCH0EN bits in TIMERx_CHCTL2 register are reset). 000: Channel 0 is configured as output. 001: Channel 0 is configured as input, IS0 is connected to CI0FE0. 010: Channel 0 is configured as input, IS0 is connected to CI1FE0. 011: Channel 0 is configured as input, IS0 is connected to ITS, this mode is working only if an internal trigger input is selected (through TSCFG15[4:0] bit-field in SYSCFG_TIMERxCFG2(x=0,7) register). 100: Channel 0 is configured as input, IS0 is connected to MCI0FE0. 101~111: Reserved.

Input capture mode:

Bits	Fields	Descriptions
31	CH1MS[2]	Channel 1 I/O mode selection Same as output compare mode.
30	CH0MS[2]	Channel 0 I/O mode selection Same as output compare mode.
29:16	Reserved	Must be kept at reset value.
15:12	CH1CAPFLT[3:0]	Channel 1 input capture filter control Refer to CH0CAPFLT description.
11:10	CH1CAPPSC[1:0]	Channel 1 input capture prescaler Refer to CH0CAPPSC description.
9:8	CH1MS[1:0]	Channel 1 I/O mode selection Same as output compare mode.
7:4	CH0CAPFLT[3:0]	Channel 0 input capture filter control An event counter is used in the digital filter, in which a transition on the output occurs after N input events. This bit-field specifies the frequency used to sample CI0 input signal and the length of the digital filter applied to CI0. 0000: Filter disabled, $f_{SAMP}=f_{DTS}$, N=1. 0001: $f_{SAMP}=f_{CK_TIMER}$, N=2. 0010: $f_{SAMP}= f_{CK_TIMER}$, N=4. 0011: $f_{SAMP}= f_{CK_TIMER}$, N=8. 0100: $f_{SAMP}=f_{DTS}/2$, N=6. 0101: $f_{SAMP}=f_{DTS}/2$, N=8. 0110: $f_{SAMP}=f_{DTS}/4$, N=6. 0111: $f_{SAMP}=f_{DTS}/4$, N=8. 1000: $f_{SAMP}=f_{DTS}/8$, N=6. 1001: $f_{SAMP}=f_{DTS}/8$, N=8. 1010: $f_{SAMP}=f_{DTS}/16$, N=5. 1011: $f_{SAMP}=f_{DTS}/16$, N=6. 1100: $f_{SAMP}=f_{DTS}/16$, N=8. 1101: $f_{SAMP}=f_{DTS}/32$, N=5. 1110: $f_{SAMP}=f_{DTS}/32$, N=6. 1111: $f_{SAMP}=f_{DTS}/32$, N=8.
3:2	CH0CAPPSC[1:0]	Channel 0 input capture prescaler This bit-field specifies the factor of the prescaler on channel 0 input. The prescaler is reset when CH0EN bit in TIMERx_CHCTL2 register is cleared. 00: Prescaler disabled, capture is done on each channel input edge. 01: Capture is done every 2 channel input edges. 10: Capture is done every 4 channel input edges. 11: Capture is done every 8 channel input edges.
1:0	CH0MS[1:0]	Channel 0 I/O mode selection

Same as output compare mode.

Channel control register 1 (TIMERx_CHCTL1)

Address offset: 0x1C

Reset value: 0x0000 0000

This register has to be accessed by word (32-bit).

31	30	29	28	27	26	25	24	23	22	21	20	19	18	17	16
CH3MS[2]	CH2MS[2]	CH3COMADDSEN	CH2COMADDSEN	Reserved			CH3COMCTL[3]								CH2COMCTL[3]
		Reserved	Reserved				Reserved								Reserved
rw	rw	rw	rw				rw								rw

15	14	13	12	11	10	9	8	7	6	5	4	3	2	1	0
CH3COMCEN	CH3COMCTL[2:0]			CH3COMSEN	Reserved	CH3MS[1:0]		CH2COMCEN	CH2COMCTL[2:0]			CH2COMSEN	Reserved	CH2MS[1:0]	
CH3CAPFLT[3:0]				CH3CAPPSC[1:0]				CH2CAPFLT[3:0]				CH2CAPPSC[1:0]			
rw				rw		rw		rw				rw		rw	

Output compare mode:

Bits	Fields	Descriptions
31	CH3MS[2]	Channel 3 I/O mode selection Refer to CH3MS[1:0]description.
30	CH2MS[2]	Channel 2 I/O mode selection Refer to CH2MS[1:0] description.
29	CH3COMADDSEN	Channel 3 additional compare output shadow enable Refer to CH2COMADDSEN description.
28	CH2COMADDSEN	Channel 2 additional compare output shadow enable When this bit is set, the shadow register of TIMERx_CH2COMV_ADD register which updates at each update event will be enabled. 0: Channel 2 additional compare shadow disabled 1: Channel 2 additional compare shadow enabled The PWM mode can be used without validating the shadow register only in single pulse mode (SPM bit in TIMERx_CTL0 register is set). This bit cannot be modified when PROT[1:0] bit-field in TIMERx_CCHP register is 11 and CH2MS bit-field is 000.
27:25	Reserved	Must be kept at reset value.
24	CH3COMCTL[3]	Channel 3 compare output control Refer to CH2COMCTL[2:0] description
23:17	Reserved	Must be kept at reset value.
16	CH2COMCTL[3]	Channel 2 compare output control

		Refer to CH2COMCTL[2:0] description
15	CH3COMCEN	Channel 3 output compare clear enable Refer to CH2COMCEN description
14:12	CH3COMCTL[2:0]	Channel 3 compare output control Refer to CH2COMCTL[2:0] description
11	CH3COMSEN	Channel 3 output compare shadow enable Refer to CH2COMSEN description
10	Reserved	Must be kept at reset value.
9:8	CH3MS[1:0]	Channel 3 I/O mode selection This bit-field specifies the direction of the channel and the input signal selection. The CH3MS[2:0] bit-field is writable only when the channel is not active (When MCH3MSEL[1:0] = 2b'00, the CH3EN bit in TIMERx_CHCTL2 register is reset; when MCH3MSEL[1:0] = 2b'11, the CH3EN and MCH3EN bits in TIMERx_CHCTL2 register are reset). 00: Channel 3 is configured as output. 01: Channel 3 is configured as input, IS3 is connected to CI3FE3. 10: Channel 3 is configured as input, IS3 is connected to CI2FE3. 11: Channel 3 is configured as input, IS3 is connected to ITS, this mode is working only if an internal trigger input is selected (through TSCFG15[4:0] bit-field in SYSCFG_TIMERxCFG2(x=0,7) register). 100: Channel 3 is configured as input, IS3 is connected to MCI3FE3. 101~111: Reserved.
7	CH2COMCEN	Channel 2 output compare clear enable. When this bit is set, the O2CPRE signal is cleared when high level is detected on ETIFP input. 0: Channel 2 output compare clear disabled 1: Channel 2 output compare clear enabled
6:4	CH2COMCTL[2:0]	Channel 2 compare output control This bit-field controls the behavior of O2CPRE which drives CH2_O. The active level of O2CPRE is high, while the active level of CH2_O depends on CH2P bit. **Note**: When multi mode channel 2 is configured in output mode, and the MCH2MSEL[1:0] = 2b'11, This bit-field controls the behavior of O2CPRE which drives CH2_O and MCH2_O. The active level of O2CPRE is high, while the active level of CH2_O and MCH2_O depends on CH2P and MCH2P bits. 0000: Timing mode. The O2CPRE signal keeps stable, independent of the comparison between the output compare register TIMERx_CH2CV and the counter TIMERx_CNT. 0001: Set the channel output on match. O2CPRE signal is forced high when the counter matches the output compare register TIMERx_CH2CV. 0010: Clear the channel output on match. O2CPRE signal is forced low when the

		counter matches the output compare register TIMERx_CH2CV. 0011: Toggle on match. O2CPRE toggles when the counter matches the output compare register TIMERx_CH2CV. 0100: Force low. O2CPRE is forced low level. 0101: Force high. O2CPRE is forced high level. 0110: PWM mode 0. When counting up, O2CPRE is active as long as the counter is smaller than TIMERx_CH2CV, otherwise it is inactive. When counting down, O2CPRE is inactive as long as the counter is larger than TIMERx_CH2CV, otherwise it is active. 0111: PWM mode 1. When counting up, O2CPRE is inactive as long as the counter is smaller than TIMERx_CH2CV, otherwise it is active. When counting down, O2CPRE is active as long as the counter is larger than TIMERx_CH2CV, otherwise it is inactive. 1000: Delayable SPM mode 0. The behavior of O2CPRE is performed as in PWM mode 0. When counting up, the O2CPRE is active. When a trigger event occurs, the O2CPRE is inactive. The O2CPRE is active again at the next update event; When counting down, the O2CPRE is inactive, when a trigger event occurs, the O2CPRE is active. The O2CPRE is inactive again at the next update event. 1001: Delayable SPM mode 1. The behavior of O2CPRE is performed as in PWM mode 1. When counting up, the O2CPRE is inactive, when a trigger event occurs, the O2CPRE is active. The O2CPRE is inactive again at the next update event; When counting down, the O2CPRE is active. When a trigger event occurs, the O2CPRE is inactive. The O2CPRE is active again at the next update event. 1010~1111: Reserved. **Note**: In the composite PWM mode (CH2CPWMEN = 1'b1 and CH2MS = 3'b000), the PWM signal output in channel 2 is composited by TIMERx_CH2CV and TIMERx_CH2COMV_ADD. Please refer to ***Composite PWM mode*** for more details. If configured in PWM mode, the O2CPRE level changes only when the output compare mode switches from "Timing" mode to "PWM" mode or the result of the comparison changes. When the outputs of CH2 and MCH2 are complementary, this bit-field is preloaded. If CCSE =1, this bit-field will only be updated when a channel commutation event is generated. This bit cannot be modified when PROT[1:0] bit-field in TIMERx_CCHP register is 11 and CH2MS bit-field is 000(compare mode).
3	CH2COMSEN	Channel 2 compare output shadow enable When this bit is set, the shadow register of TIMERx_CH2CV register, which updates at each update event will be enabled. 0: Channel 2 output compare shadow disabled 1: Channel 2 output compare shadow enabled The PWM mode can be used without validating the shadow register only in single pulse mode (SPM bit in TIMERx_CTL0 register is set).

		This bit cannot be modified when PROT[1:0] bit-field in TIMERx_CCHP register is 11 and CH2MS bit-field is 000.
2	Reserved	Must be kept at reset value.
1:0	CH2MS[1:0]	Channel 2 I/O mode selection This bit-field specifies the work mode of the channel and the input signal selection. The CH2MS[2:0] bit-field is writable only when the channel is not active (When MCH2MSEL[1:0] = 2b'00, the CH2EN bit in TIMERx_CHCTL2 register is reset; when MCH2MSEL[1:0] = 2b'11, the CH2EN and MCH2EN bits in TIMERx_CHCTL2 register are reset). 00: Channel 2 is configured as output. 01: Channel 2 is configured as input, IS2 is connected to CI2FE2. 10: Channel 2 is configured as input, IS2 is connected to CI3FE2. 11: Channel 2 is configured as input, IS2 is connected to ITS. This mode is working only if an internal trigger input is selected (through TSCFG15[4:0] bit-field in SYSCFG_TIMERxCFG2(x=0,7) register). 100: Channel 2 is configured as input, IS2 is connected to MCI2FE2. 101~111: Reserved.

Input capture mode:

Bits	Fields	Descriptions
31	CH3MS[2]	Channel 3 I/O mode selection Same as output compare mode.
30	CH2MS[2]	Channel 2 I/O mode selection Same as output compare mode.
31:16	Reserved	Must be kept at reset value.
15:12	CH3CAPFLT[3:0]	Channel 3 input capture filter control Refer to CH2CAPFLT description.
11:10	CH3CAPPSC[1:0]	Channel 3 input capture prescaler Refer to CH2CAPPSC description.
9:8	CH3MS[1:0]	Channel 3 mode selection Same as output compare mode.
7:4	CH2CAPFLT[3:0]	Channel 2 input capture filter control An event counter is used in the digital filter, in which a transition on the output occurs after N input events. This bit-field specifies the frequency used to sample CI2 input signal and the length of the digital filter applied to CI2. 0000: Filter disabled, $f_{SAMP}=f_{DTS}$, N=1. 0001: $f_{SAMP}=f_{CK_TIMER}$, N=2. 0010: $f_{SAMP}= f_{CK_TIMER}$, N=4. 0011: $f_{SAMP}= f_{CK_TIMER}$, N=8.

		0100: $f_{SAMP}=f_{DTS}/2$, N=6. 0101: $f_{SAMP}=f_{DTS}/2$, N=8. 0110: $f_{SAMP}=f_{DTS}/4$, N=6. 0111: $f_{SAMP}=f_{DTS}/4$, N=8. 1000: $f_{SAMP}=f_{DTS}/8$, N=6. 1001: $f_{SAMP}=f_{DTS}/8$, N=8. 1010: $f_{SAMP}=f_{DTS}/16$, N=5. 1011: $f_{SAMP}=f_{DTS}/16$, N=6. 1100: $f_{SAMP}=f_{DTS}/16$, N=8. 1101: $f_{SAMP}=f_{DTS}/32$, N=5. 1110: $f_{SAMP}=f_{DTS}/32$, N=6. 1111: $f_{SAMP}=f_{DTS}/32$, N=8.
3:2	CH2CAPPSC[1:0]	Channel 2 input capture prescaler This bit-field specifies the factor of the prescaler on channel 2 input. The prescaler is reset when CH2EN bit in TIMERx_CHCTL2 register is cleared. 00: Prescaler disabled, capture is done on each channel input edge. 01: Capture is done every 2 channel input edges. 10: Capture is done every 4 channel input edges. 11: Capture is done every 8 channel input edges.
1:0	CH2MS[1:0]	Channel 2 mode selection Same as output compare mode.

Channel control register 2 (TIMERx_CHCTL2)

Address offset: 0x20

Reset value: 0x0000 0000

This register can be accessed by half-word(16-bit) or word(32-bit).

31	30	29	28	27	26	25	24	23	22	21	20	19	18	17	16
Reserved															

15	14	13	12	11	10	9	8	7	6	5	4	3	2	1	0
MCH3P	MCH3EN	CH3P	CH3EN	MCH2P	MCH2EN	CH2P	CH2EN	MCH1P	MCH1EN	CH1P	CH1EN	MCH0P	MCH0EN	CH0P	CH0EN
rw	rw	rw	rw	rw	rw	rw	rw	rw	rw	rw	rw	rw	rw	rw	rw

Bits	Fields	Descriptions
31:16	Reserved	Must be kept at reset value.
15	MCH3P	Multi mode channel 3 capture/compare polarity Refer to MCH0P description.
14	MCH3EN	Multi mode channel 3 capture/compare enable Refer to MCH0EN description.

13	CH3P	Channel 3 capture/compare polarity Refer to CH0P description.
12	CH3EN	Channel 3 capture/compare enable Refer to CH0EN description.
11	MCH2P	Multi mode channel 2 output polarity Refer to MCH0P description.
10	MCH2EN	Multi mode channel 2 output enable Refer to MCH0EN description.
9	CH2P	Channel 2 capture/compare polarity Refer to CH0P description.
8	CH2EN	Channel 2 capture/compare enable Refer to CH0EN description.
7	MCH1P	Multi mode channel 1 output polarity Refer to MCH0P description.
6	MCH1EN	Multi mode channel 1 output enable Refer to MCH0EN description.
5	CH1P	Channel 1 capture/compare polarity Refer to CH0P description.
4	CH1EN	Channel 1 capture/compare enable Refer to CH0EN description.
3	MCH0P	Multi mode channel 0 output polarity When Multi mode channel 0 is configured in output mode, and the MCH0MSEL[1:0] = 2b'11, this bit specifies the MCH0_O output signal polarity. 0: Multi mode channel 0 output active high 1: Multi mode channel 0 output active low When CH0 is configured in input mode, in conjunction with CH0P, this bit is used to define the polarity of CH0. This bit cannot be modified when PROT[1:0] bit-field in TIMERx_CCHP register is 11 or 10.
2	MCH0EN	Multi mode channel 0 capture/compare enable When multi mode channel 0 is configured in output mode, setting this bit enables MCH0_O signal in active state. When multi mode channel 0 is configured in input mode, setting this bit enables the capture event in multi mode channel 0. 0: Multi mode channel 0 disabled 1: Multi mode channel 0 enabled
1	CH0P	Channel 0 capture/compare polarity When channel 0 is configured in output mode, this bit specifies the output signal polarity.

		0: Channel 0 active high 1: Channel 0 active low When channel 0 is configured in input mode, these bits specifie the channel 0 input signal's polarity. [MCH0P, CH0P] will select the active trigger or capture polarity for channel 0 input signals. 00: channel 0 input signal's rising edge is the active signal for capture or trigger operation in slave mode. And channel 0 input signal will not be inverted. 01: channel 0 input signal's falling edge is the active signal for capture or trigger operation in slave mode. And channel 0 input signal will be inverted. 10: Reserved. 11: Noninverted/ both channel 0 input signal's edges. This bit cannot be modified when PROT[1:0] bit-field in TIMERx_CCHP register is 11 or 10.
0	CH0EN	Channel 0 capture/compare enable When channel 0 is configured in output mode, setting this bit enables CH0_O signal in active state. When channel 0 is configured in input mode, setting this bit enables the capture event in channel 0. 0: Channel 0 disabled 1: Channel 0 enabled

Counter register (TIMERx_CNT)

Address offset: 0x24
Reset value: 0x0000 0000

This register has to be accessed by word (32-bit).

31	30	29	28	27	26	25	24	23	22	21	20	19	18	17	16
UPIFBU	Reserved														
r															

15	14	13	12	11	10	9	8	7	6	5	4	3	2	1	0
CNT[15:0]															
rw															

Bits	Fields	Descriptions
31	UPIFBU	UPIF bit backup This bit is a backup of UPIF bit in TIMERx_INTF register and read-only. This bit is only valid when UPIFBUEN = 1. If the UPIFBUEN =0, this bit is reserved and read the result is 0.
30:16	Reserved	Must be kept at reset value.
15:0	CNT[15:0]	This bit-field indicates the current counter value. Writing to this bit-field can change the value of the counter.

Prescaler register (TIMERx_PSC)

Address offset: 0x28

Reset value: 0x0000 0000

This register has to be accessed by word (32-bit).

31	30	29	28	27	26	25	24	23	22	21	20	19	18	17	16
Reserved															

15	14	13	12	11	10	9	8	7	6	5	4	3	2	1	0
PSC[15:0]															
rw															

Bits	Fields	Descriptions
31:16	Reserved	Must be kept at reset value.
15:0	PSC[15:0]	Prescaler value of the counter clock The PSC clock is divided by (PSC+1) to generate the counter clock. The value of this bit-field will be loaded to the corresponding shadow register at every update event.

Counter auto reload register (TIMERx_CAR)

Address offset: 0x2C

Reset value: 0x0000 FFFF

This register has to be accessed by word (32-bit).

31	30	29	28	27	26	25	24	23	22	21	20	19	18	17	16
Reserved															

15	14	13	12	11	10	9	8	7	6	5	4	3	2	1	0
CARL[15:0]															
rw															

Bits	Fields	Descriptions
31:16	Reserved	Must be kept at reset value.
15:0	CARL[15:0]	Counter auto reload value This bit-field specifies the auto reload value of the counter.

Counter repetition register 0 (TIMERx_CREP0)

Address offset: 0x30

Reset value: 0x0000 0000

This register has to be accessed by word (32-bit).

31	30	29	28	27	26	25	24	23	22	21	20	19	18	17	16
Reserved															

15	14	13	12	11	10	9	8	7	6	5	4	3	2	1	0
Reserved								CREP0[7:0]							
											rw				

Bits	Fields	Descriptions
31:8	Reserved	Must be kept at reset value.
7:0	CREP0[7:0]	Counter repetition value 0 This bit-field specifies the update event generation rate. Each time the repetition counter counts down to zero, an update event will be generated. The update rate of the shadow registers is also affected by this bit-field when these shadow registers are enabled. **Note**: This bit-field just used with CREPSEL =0 (in TIMERx_CFG register).

Channel 0 capture/compare value register (TIMERx_CH0CV)

Address offset: 0x34

Reset value: 0x0000 0000

This register has to be accessed by word (32-bit).

31	30	29	28	27	26	25	24	23	22	21	20	19	18	17	16
Reserved															

15	14	13	12	11	10	9	8	7	6	5	4	3	2	1	0
CH0VAL[15:0]															
											rw				

Bits	Fields	Descriptions
31:16	Reserved	Must be kept at reset value.
15:0	CH0VAL[15:0]	Capture/compare value of channel 0 When channel 0 is configured in input mode, this bit-field indicates the counter value at the last capture event. And this bit-field is read-only. When channel 0 is configured in output mode, this bit-field contains value to be compared to the counter. When the corresponding shadow register is enabled, the shadow register updates by every update event.

Channel 1 capture/compare value register (TIMERx_CH1CV)

Address offset: 0x38

Reset value: 0x0000 0000

This register has to be accessed by word (32-bit).

31	30	29	28	27	26	25	24	23	22	21	20	19	18	17	16
Reserved															

15	14	13	12	11	10	9	8	7	6	5	4	3	2	1	0
CH1VAL[15:0]															
rw															

Bits	Fields	Descriptions
31:16	Reserved	Must be kept at reset value.
15:0	CH1VAL[15:0]	Capture/compare value of channel 1 When channel 1 is configured in input mode, this bit-field indicates the counter value at the last capture event. And this bit-field is read-only. When channel 1 is configured in output mode, this bit-field contains value to be compared to the counter. When the corresponding shadow register is enabled, the shadow register updates by every update event.

Channel 2 capture/compare value register (TIMERx_CH2CV)

Address offset: 0x3C

Reset value: 0x0000 0000

This register has to be accessed by word (32-bit).

31	30	29	28	27	26	25	24	23	22	21	20	19	18	17	16
Reserved															

15	14	13	12	11	10	9	8	7	6	5	4	3	2	1	0
CH2VAL[15:0]															
rw															

Bits	Fields	Descriptions
31:16	Reserved	Must be kept at reset value.
15:0	CH2VAL[15:0]	Capture/compare value of channel 2 When channel 2 is configured in input mode, this bit-field indicates the counter value at the last capture event. And this bit-field is read-only. When channel 2 is configured in output mode, this bit-field contains value to be compared to the counter. When the corresponding shadow register is enabled, the shadow register updates by every update event.

Channel 3 capture/compare value register (TIMERx_CH3CV)

Address offset: 0x40

Reset value: 0x0000 0000

This register has to be accessed by word (32-bit).

31	30	29	28	27	26	25	24	23	22	21	20	19	18	17	16
Reserved															

15	14	13	12	11	10	9	8	7	6	5	4	3	2	1	0
CH3VAL[15:0]															
rw															

Bits	Fields	Descriptions
31:16	Reserved	Must be kept at reset value.
15:0	CH3VAL[15:0]	Capture/compare value of channel 3 When channel 3 is configured in input mode, this bit-field indicates the counter value at the last capture event. And this bit-field is read-only. When channel 3 is configured in output mode, this bit-field contains value to be compared to the counter. When the corresponding shadow register is enabled, the shadow register updates by every update event.

Complementary channel protection register (TIMERx_CCHP)

Address offset: 0x44

Reset value: 0x0000 0000

This register has to be accessed by word (32-bit).

31	30	29	28	27	26	25	24	23	22	21	20	19	18	17	16
Reserved		BRK1LK	BRK0LK	BRK1REL	BRK0REL	BRK1P	BRK1EN	BRK1F[3:0]				BRK0F[3:0]			
		rw	rw	rw	rw	rw	rw	rw				rw			

15	14	13	12	11	10	9	8	7	6	5	4	3	2	1	0
POEN	OAEN	BRK0P	BRK0EN	ROS	IOS	PROT[1:0]		DTCFG[7:0]							
rw	rw	rw	rw	rw	rw	rw		rw							

Bits	Fields	Descriptions
31:30	Reserved	Must be kept at reset value.
29	BRK1LK	BREAK1 input locked Refer to BRK0LK description
28	BRK0LK	BREAK0 input locked 0: BREAK0 input in input mode 1: BREAK0 input in locked mode When the BRK0LK is set to 1, the BREAK0 input is configured in open drain output mode. Any active BREAK0 event asserts a low logic level on the BREAK0 input to indicate an internal BREAK0 event to external devices. This bit can be modified only when PROT[1:0] bit-field in TIMERx_CCHP register is

		00. **Note**: Every write operation to this bit needs a delay of 1 APB clock to active.
27	BRK1REL	BREAK1 input released Refer to BRK0REL description.
26	BRK0REL	BREAK0 input released This bit is cleared by hardware when the BREAK0 input is invalid. 0: BREAK0 input is unreleased 1: BREAK0 input is released The locked output control (open drain mode in Hi-z state) is released by setting this bit with software. And when the fault is disappeared, this bit will reset by hardware. **Note**: Every write operation to this bit needs a delay of 1 APB clock to active.
25	BRK1P	BREAK1 input signal polarity This bit specifies the polarity of the BREAK1 input signal. 0: BREAK1 input active low 1: BREAK1 input active high This bit can be modified only when PROT[1:0] bit-field in TIMERx_CCHP register is 00. **Note**: Every write operation to this bit needs a delay of 1 APB clock to active.
24	BRK1EN	BREAK1 input signal enable This bit can be set to enable the BREAK1 input signal. 0: BREAK1 input disabled 1: BREAK1 input enabled This bit can be modified only when PROT[1:0] bit-field in TIMERx_CCHP register is 00. **Note**: 1) Every write operation to this bit needs a delay of 1 APB clock to active. 2) This bit is only used with ROS=1 and IOS=1.
23:20	BRK1F[3:0]	BREAK1 input signal filter An event counter is used in the digital filter, in which a transition on the output occurs after N input events. This bit-field specifies the frequency used to sample BREAK1 input signal and the length of the digital filter applied to BREAK1. 0000: Filter disabled. BREAK1 act asynchronously, N=1 0001: $f_{SAMP} = f_{CK_TIMER}$, N=2 0010: $f_{SAMP} = f_{CK_TIMER}$, N=4 0011: $f_{SAMP} = f_{CK_TIMER}$, N=8 0100: $f_{SAMP} = f_{DTS}/2$, N=6 0101: $f_{SAMP} = f_{DTS}/2$, N=8 0110: $f_{SAMP} = f_{DTS}/4$, N=6 0111: $f_{SAMP} = f_{DTS}/4$, N=8 1000: $f_{SAMP} = f_{DTS}/8$, N=6 1001: $f_{SAMP} = f_{DTS}/8$, N=8

		1010: f_{SAMP} = f_{DTS}/16, N=5 1011: f_{SAMP} = f_{DTS}/16, N=6 1100: f_{SAMP} = f_{DTS}/16, N=8 1101: f_{SAMP} = f_{DTS}/32, N=5 1110: f_{SAMP} = f_{DTS}/32, N=6 1111: f_{SAMP} = f_{DTS}/32, N=8 This bit can be modified only when PROT[1:0] bit-field in TIMERx_CCHP register is 00.
19:16	BRK0F[3:0]	BREAK0 input signal filter An event counter is used in the digital filter, in which a transition on the output occurs after N input events. This bit-field specifies the frequency used to sample BREAK0 input signal and the length of the digital filter applied to BREAK0. 0000: Filter disabled. BREAK0 act asynchronously, N=1 0001: f_{SAMP} = f_{CK_TIMER}, N=2 0010: f_{SAMP} = f_{CK_TIMER}, N=4 0011: f_{SAMP} = f_{CK_TIMER}, N=8 0100: f_{SAMP} = f_{DTS}/2, N=6 0101: f_{SAMP} = f_{DTS}/2, N=8 0110: f_{SAMP} = f_{DTS}/4, N=6 0111: f_{SAMP} = f_{DTS}/4, N=8 1000: f_{SAMP} = f_{DTS}/8, N=6 1001: f_{SAMP} = f_{DTS}/8, N=8 1010: f_{SAMP} = f_{DTS}/16, N=5 1011: f_{SAMP} = f_{DTS}/16, N=6 1100: f_{SAMP} = f_{DTS}/16, N=8 1101: f_{SAMP} = f_{DTS}/32, N=5 1110: f_{SAMP} = f_{DTS}/32, N=6 1111: f_{SAMP} = f_{DTS}/32, N=8 This bit can be modified only when PROT[1:0] bit-field in TIMERx_CCHP register is 00.
15	POEN	Primary output enable This bit is set by software or automatically set by hardware depending on the OAEN bit. It is cleared asynchronously by hardware as soon as the break input is active. When one of channels is configured in output mode, setting this bit enables the channel outputs (CHx_O and MCHx_O) if the corresponding enable bits (CHxEN, MCHxEN in TIMERx_CHCTL2 register) have been set. 0: Channel outputs are disabled or forced to idle state. 1: Channel outputs are enabled.
14	OAEN	Output automatic enable This bit specifies whether the POEN bit can be set automatically by hardware. 0: POEN cannot be set by hardware. 1: POEN can be set by hardware automatically at the next update event, if the break

		input is not active. This bit can be modified only when PROT[1:0] bit-field in TIMERx_CCHP register is 00.
13	BRK0P	BREAK0 input signal polarity This bit specifies the polarity of the BREAK0 input signal. 0: BREAK0 input active low 1: BREAK0 input active high This bit can be modified only when PROT[1:0] bit-field in TIMERx_CCHP register is 00.
12	BRK0EN	BREAK0 input signal enable This bit can be set to enable the BREAK0 input signal 0: BREAK0 input disabled 1: BREAK0 input enabled This bit can be modified only when PROT[1:0] bit-field in TIMERx_CCHP register is 00.
11	ROS	Run mode “off-state” enable When POEN bit is set (Run mode), this bit can be set to enable the “off-state” for the channels which has been configured in output mode. Please refer to ***Table 24-4. Complementary outputs controlled by parameters (MCHxMSEL =2’b11)***. 0: “off-state” disabled. If the CHxEN or CHxNEN bit is reset, the corresponding channel is output disabled. 1: “off-state” enabled. If the CHxEN or CHxNEN bit is reset, the corresponding channel is “off-state”. This bit cannot be modified when PROT [1:0] bit-filed in TIMERx_CCHP register is 10 or 11.
10	IOS	Idle mode “off-state” enable When POEN bit is reset (Idle mode), this bit can be set to enable the “off-state” for the channels which has been configured in output mode. Please refer to ***Table 24-4. Complementary outputs controlled by parameters (MCHxMSEL =2’b11)***. 0: “off-state” disabled. If the CHxEN/CHxNEN bits are both reset, the channels are output disabled. 1: “off-state” enabled. No matter the CHxEN/CHxNEN bits, the channels are “off-state”. This bit cannot be modified when PROT [1:0] bit-filed in TIMERx_CCHP register is 10 or 11.
9:8	PROT[1:0]	Complementary register protect control This bit-field specifies the write protection property of registers. 00: Protect disabled. No write protection. 01: PROT mode 0. The ISOx/ISOxN bits in TIMERx_CTL1 register, the BRK0EN/ BRK0P/BRK1EN/ BRK1P/OAEN/DTCFG bits in TIMERx_CCHP register, the DTCFG bits in TIMERx_FCCHPx (x = 0...3) register, are writing protected.

		10: PROT mode 1. In addition to the registers in PROT mode 0, the CHxP/MCHxP bits in TIMERx_CHCTL2 register (if related channel is configured in output mode), the ROS/IOS bits in TIMERx_CCHP register and the ROS/IOS bits in TIMERx_FCCHPx (x = 0..3) register are writing protected. 11: PROT mode 2. In addition to the registers in PROT mode 1, the CHxCOMCTL/ CHxCOMSEN/ CHxCOMADDSEN/ MCHxCOMCTL/ MCHxCOMSEN bits in TIMERx_CHCTL0/1 and TIMERx_MCHCTL0/1 registers (if the related channel is configured in output) are writing protected. This bit-field can be written only once after the system reset. Once the TIMERx_CCHP register has been written, this bit-field will be writing protected.
7:0	DTCFG[7:0]	Dead time configuration This bit-field controls the value of the dead-time, which is inserted before the output transitions. The relationship between the value of DTCFG and the duration of dead-time is as follow: DTCFG[7:5] = 3'b0xx: DT value = DTCFG[7:0] * t_{DT}, t_{DT} = t_{DTS}. DTCFG[7:5] = 3'b10x: DT value = (64+DTCFG[5:0]) * t_{DT}, t_{DT} = t_{DTS}*2. DTCFG[7:5] = 3'b110: DT value = (32+DTCFG[4:0]) * t_{DT}, t_{DT} = t_{DTS}*8. DTCFG[7:5] = 3'b111: DT value = (32+DTCFG[4:0]) * t_{DT}, t_{DT} = t_{DTS}*16. This bit can be modified only when PROT[1:0] bit-field in TIMERx_CCHP register is 00.

Multi mode channel control register 0 (TIMERx_MCHCTL0)

Address offset: 0x48

Reset value: 0x0000 0000

This register has to be accessed by word (32-bit).

31	30	29	28	27	26	25	24	23	22	21	20	19	18	17	16
MCH1MS[2]	MCH0MS[2]	Reserved					MCH1COMCTL[3]	Reserved							MCH0COMCTL[3]
							Reserved								Reserved
rw	rw						rw								rw

15	14	13	12	11	10	9	8	7	6	5	4	3	2	1	0
MCH1COMCEN	MCH1COMCTL[2:0]			MCH1COMSEN	Reserved	MCH1MS[1:0]		MCH0COMCEN	MCH0COMCTL[2:0]			MCH0COMSEN	Reserved	MCH0MS[1:0]	
MCH1CAPFLT[3:0]				MCH1CAPPSC[1:0]				MCH0CAPFLT[3:0]				MCH0CAPPSC[1:0]			
rw				rw		rw		rw				rw		rw	

Output compare mode:

Bits	Fields	Descriptions
31	MCH1MS[2]	Multi mode channel 1 I/O mode selection Refer to MCH1MS[1:0]description.
30	MCH0MS[2]	Multi mode channel 0 I/O mode selection

		Refer to MCH0MS[1:0] description.
29:25	Reserved	Must be kept at reset value.
24	MCH1COMCTL [3]	Multi mode channel 1 compare output control. Refer to MCH0COMCTL[2:0] description.
23:17	Reserved	Must be kept at reset value.
16	MCH0COMCTL [3]	Multi mode channel 0 compare output control. Refer to MCH0COMCTL[2:0] description.
15	MCH1COMCEN	Multi mode channel 1 output compare clear enable. Refer to MCH0COMCEN description.
14:12	MCH1COMCTL [2:0]	Multi mode channel 1 compare output control. Refer to MCH0COMCTL description.
11	MCH1COMSEN	Multi mode channel 1 output compare shadow enable Refer to MCH0COMSEN description.
10	Reserved	Must be kept at reset value.
9:8	MCH1MS[1:0]	Multi mode channel 1 I/O mode selection This bit-field specifies the direction of the channel and the input signal selection. This bit-field is writable only when the channel is not active (the MCH1EN bit in TIMERx_CHCTL2 register is reset) 000: Multi mode channel 1 is configured as output. 001: Multi mode channel 1 is configured as input, MIS1 is connected to MCI1FEM1. 010: Multi mode channel 1 is configured as input, MIS1 is connected to MCI0FEM1. 011: Multi mode channel 1 is configured as input, MIS1 is connected to ITS. This mode is working only if an internal trigger input is selected (through TSCFG15[4:0] bit-field in SYSCFG_TIMERxCFG2(x=0,7) register). 100: Multi mode channel 1 is configured as input, MIS1 is connected to CI1FEM1. 101~111: Reserved.
7	MCH0COMCEN	Multi mode channel 0 output compare clear enable. When this bit is set, the MO0CPRE signal is cleared when high level is detected on ETIFP input. 0: Multi mode channel 0 output compare clear disabled. 1: Multi mode channel 0 output compare clear enabled.
6:4	MCH0COMCTL [2:0]	Multi mode channel 0 output compare control When multi mode channel 0 is configured in output mode, and the MCH0MSEL[1:0] = 2b'00, the MCH0COMCTL[3] and MCH0COMCTL[2:0] bit-field control the behavior of MO0CPRE which drives MCH0_O. The active level of MO0CPRE is high, while the active level of MCH0_O depends on MCH0FP[1:0] bits. **Note**: When multi mode channel 0 is configured in output mode, and the MCH0MSEL[1:0] = 2b'11, the CH0COMCTL[2:0] bit-field controls the behavior of

		O0CPRE which drives CH0_O and MCH0_O, while the active level of CH0_O and MCH0_O depends on CH0P and MCH0P bits. 0000: Timing mode. The MO0CPRE signal keeps stable, independent of the comparison between the register TIMERx_MCH0CV and the counter TIMERx_CNT. 0001: Set the channel output on match. MO0CPRE signal is forced high when the counter matches the output compare register TIMERx_MCH0CV. 0010: Clear the channel output on match. MO0CPRE signal is forced low when the counter matches the output compare register TIMERx_MCH0CV. 0011: Toggle on match. MO0CPRE toggles when the counter matches the output compare register TIMERx_MCH0CV. 0100: Force low. MO0CPRE is forced low level. 0101: Force high. MO0CPRE is forced high level. 0110: PWM mode 0. When counting up, MO0CPRE is active as long as the counter is smaller than TIMERx_MCH0CV, otherwise it is inactive. When counting down, MO0CPRE is inactive as long as the counter is larger than TIMERx_MCH0CV, otherwise it is active. 0111: PWM mode 1. When counting up, MO0CPRE is inactive as long as the counter is smaller than TIMERx_MCH0CV, otherwise it is active. When counting down, MO0CPRE is active as long as the counter is larger than TIMERx_MCH0CV, otherwise it is inactive. 1000: Delayable SPM mode 0. The behavior of MO0CPRE is performed as in PWM mode 0. When counting up, the MO0CPRE is active. When a trigger event occurs, the MO0CPRE is inactive. The MO0CPRE is active again at the next update event; When counting down, the MO0CPRE is inactive, when a trigger event occurs, the O0CPR MO0CPRE E is active. The MO0CPRE is inactive again at the next update event. 1001: Delayable SPM mode 1. The behavior of MO0CPRE is performed as in PWM mode 1. When counting up, the MO0CPRE is inactive, when a trigger event occurs, the MO0CPRE is active. The MO0CPRE is inactive again at the next update event; When counting down, the MO0CPRE is active. When a trigger event occurs, the MO0CPRE is inactive. The MO0CPRE is active again at the next update event. 1010~1111: Reserved. If configured in PWM mode, the MO0CPRE level changes only when the output compare mode switches from “Timing” mode to “PWM” mode or the result of the comparison changes. When the outputs of CH0 and MCH0 are complementary, this bit-field is preloaded. If CCSE =1, this bit-field will only be updated when a channel commutation event is generated. This bit cannot be modified when PROT[1:0] bit-field in TIMERx_CCHP register is 11 and CH0NMS bit-field is 00(compare mode).
3	MCH0COMSEN	Multi mode channel 0 output compare shadow enable When this bit is set, the shadow register of TIMERx_MCH0CV register which

		updates at each update event will be enabled. 0: Multi mode channel 0 output compare shadow disabled 1: Multi mode channel 0 output compare shadow enabled The PWM mode can be used without validating the shadow register only in single pulse mode (SPM bit in TIMERx_CTL0 register is set). This bit cannot be modified when PROT[1:0] bit-field in TIMERx_CCHP register is 11 and MCH0MS bit-field is 00.
2	Reserved	Must be kept at reset value.
1:0	MCH0MS[1:0]	Multi mode channel 0 I/O mode selection This bit-field specifies the work mode of the channel and the input signal selection. This bit-field is writable only when the channel is not active (MCH0EN bit in TIMERx_CHCTL2 register is reset). 000: Multi mode channel 0 is configured as output. 001: Multi mode channel 0 is configured as input, MIS0 is connected to MCI0FEM0. 010: Multi mode channel 0 is configured as input, MIS0 is connected to MCI1FEM0. 011: Multi mode channel 0 is configured as input, MIS0 is connected to ITS, this mode is working only if an internal trigger input is selected (through TSCFG15[4:0] bit-field in SYSCFG_TIMERxCFG2(x=0,7) register). 100: Multi mode channel 0 is configured as input, MIS0 is connected to CI0FEM0. 101~111: Reserved.

Input capture mode:

Bits	Fields	Descriptions
31	MCH1MS[2]	Multi mode channel 1 I/O mode selection Refer to MCH1MS[1:0]description.
30	MCH0MS[2]	Multi mode channel 0 I/O mode selection Refer to MCH0MS[1:0] description.
29:16	Reserved	Must be kept at reset value.
15:12	MCH1CAPFLT[3:0]	Multi mode channel 1 input capture filter control. Refer to MCH0CAPFLT description.
11:10	MCH1CAPPSC[1:0]	Multi mode channel 1 input capture prescaler. Refer to MCH0CAPPSC description.
9:8	MCH1MS[1:0]	Multi mode channel 1 I/O mode selection. Same as output compare mode.
7:4	MCH0CAPFLT[3:0]	Multi mode channel 0 input capture filter control. An event counter is used in the digital filter, in which a transition on the output occurs after N input events. This bit-field specifies the frequency used to sample MCI0 input signal and the length of the digital filter applied to MCI0. 0000: Filter disabled, $f_{SAMP}=f_{DTS}$, N=1. 0001: $f_{SAMP}=f_{CK_TIMER}$, N=2.

0010: f_{SAMP}= f_{CK_TIMER}, N=4.

0011: f_{SAMP}= f_{CK_TIMER}, N=8.

0100: f_{SAMP}=f_{DTS}/2, N=6.

0101: f_{SAMP}=f_{DTS}/2, N=8.

0110: f_{SAMP}=f_{DTS}/4, N=6.

0111: f_{SAMP}=f_{DTS}/4, N=8.

1000: f_{SAMP}=f_{DTS}/8, N=6.

1001: f_{SAMP}=f_{DTS}/8, N=8.

1010: f_{SAMP}=f_{DTS}/16, N=5.

1011: f_{SAMP}=f_{DTS}/16, N=6.

1100: f_{SAMP}=f_{DTS}/16, N=8.

1101: f_{SAMP}=f_{DTS}/32, N=5.

1110: f_{SAMP}=f_{DTS}/32, N=6.

1111: f_{SAMP}=f_{DTS}/32, N=8.

3:2	MCH0CAPPSC[1:0]	Multi mode channel 0 input capture prescaler This bit-field specifies the factor of the prescaler on channel 0 input. The prescaler is reset when MCH0EN bit in TIMERx_CHCTL2 register is cleared. 00: Prescaler disabled, capture is done on each channel input edge. 01: Capture is done every 2 channel input edges. 10: Capture is done every 4 channel input edges. 11: Capture is done every 8 channel input edges.
1:0	MCH0MS[1:0]	Multi mode channel 0 I/O mode selection Same as output compare mode

Multi mode channel control register 1 (TIMERx_MCHCTL1)

Address offset: 0x4C

Reset value: 0x0000 0000

This register has to be accessed by word (32-bit).

31	30	29	28	27	26	25	24	23	22	21	20	19	18	17	16
MCH3MS[2]	MCH2MS[2]	Reserved					MCH3COMCTL[3]	Reserved							MCH3COMCTL[3]
							Reserved								Reserved
rw	rw						rw								rw

15	14	13	12	11	10	9	8	7	6	5	4	3	2	1	0
MCH3COMCEN	MCH3COMCTL[2:0]			MCH3COMSEN	Reserved	MCH3MS[1:0]		MCH2COMCEN	MCH2COMCTL[2:0]			MCH2COMSEN	Reserved	MCH2MS[1:0]	
MCH3CAPFLT[3:0]				MCH3CAPPSC[1:0]				MCH2CAPFLT[3:0]				MCH2CAPPSC[1:0]			
rw				rw		rw		rw				rw		rw	

Output compare mode:

Bits	Fields	Descriptions
31	MCH3MS[2]	Multi mode channel 1 I/O mode selection

		Refer to MCH3MS[1:0]description.
30	MCH2MS[2]	Multi mode channel 0 I/O mode selection Refer to MCH2MS[1:0] description.
29:25	Reserved	Must be kept at reset value.
24	MCH3COMCTL [3]	Multi mode channel 3 compare output control. Refer to MCH2COMCTL[2:0] description.
23:17	Reserved	Must be kept at reset value.
16	MCH2COMCTL [3]	Multi mode channel 2 compare output control. Refer to MCH2COMCTL[2:0] description.
15	MCH3COMCEN	Multi mode channel 3 output compare clear enable Refer to MCH2COMCEN description
14:12	MCH3COMCTL[2:0]	Multi mode channel 3 compare output control Refer to MCH2COMCTL description
11	MCH3COMSEN	Multi mode channel 3 output compare shadow enable Refer to MCH2COMSEN description
10	Reserved	Must be kept at reset value.
9:8	MCH3MS[1:0]	Multi mode channel 3 I/O mode selection This bit-field specifies the direction of the channel and the input signal selection. This bit-field is writable only when the channel is not active (MCH3EN bit in TIMERx_CHCTL2 register is reset). 000: Multi mode channel 3 is configured as output. 01: Multi mode channel 3 is configured as input, MIS3 is connected to MCI3FEM3. 010: Multi mode channel 3 is configured as input, MIS3 is connected to MCI2FEM3. 011: Multi mode channel 3 is configured as input, MIS3 is connected to ITS, this mode is working only if an internal trigger input is selected (through TSCFG15[4:0] bit-field in SYSCFG_TIMERxCFG2(x=0,7) register). 100: Multi mode channel 3 is configured as input, MIS3 is connected to CI3FEM3. 101~111: Reserved.
7	MCH2COMCEN	Multi mode channel 2 output compare clear enable. When this bit is set, the MO2CPRE signal is cleared when high level is detected on ETIFP input. 0: Multi mode channel 2 output compare clear disabled 1: Multi mode channel 2 output compare clear enabled
6:4	MCH2COMCTL[2:0]	Multi mode channel 2 compare output control When multi mode channel 2 is configured in output mode, and the MCH2MSEL[1:0] = 2b’00, MCH2COMCTL[3] and MCH2COMCTL[2:0] bit-field control the behavior of MO2CPRE which drives MCH2_O. The active level of MO2CPRE is high, while the active level of MCH2_O depends on MCH2FP[1:0] bits.

Note: When multi mode channel 2 is configured in output mode, and the MCH2MSEL[1:0] = 2b'11, the CH2COMCTL[2:0] bit-field controls the behavior of O2CPRE which drives CH2_O and MCH2_O, while the active level of CH2_O and MCH2_O depends on CH2P and MCH2P bits.

0000: Timing mode. The MO2CPRE signal keeps stable, independent of the comparison between the output compare register TIMERx_MCH2CV and the counter TIMERx_CNT.

0001: Set the channel output on match. MO2CPRE signal is forced high when the counter matches the output compare register TIMERx_MCH2CV.

0010: Clear the channel output on match. MO2CPRE signal is forced low when the counter matches the output compare register TIMERx_MCH2CV.

0011: Toggle on match. MO2CPRE toggles when the counter matches the output compare register TIMERx_MCH2CV.

0100: Force low. MO2CPRE is forced low level.

0101: Force high. MO2CPRE is forced high level.

0110: PWM mode 0. When counting up, MO2CPRE is active as long as the counter is smaller than TIMERx_MCH2CV, otherwise it is inactive. When counting down, MO2CPRE is inactive as long as the counter is larger than TIMERx_MCH2CV, otherwise it is active.

0111: PWM mode 1. When counting up, MO2CPRE is inactive as long as the counter is smaller than TIMERx_MCH2CV, otherwise it is active. When counting down, MO2CPRE is active as long as the counter is larger than TIMERx_MCH2CV, otherwise it is inactive.

1000: Delayable SPM mode 0. The behavior of MO2CPRE is performed as in PWM mode 0. When counting up, the MO2CPRE is active. When a trigger event occurs, the MO2CPRE is inactive. The MO2CPRE is active again at the next update event; When counting down, the MO2CPRE is inactive, when a trigger event occurs, the O0CPR MO2CPRE E is active. The MO2CPRE is inactive again at the next update event.

1001: Delayable SPM mode 1. The behavior of MO2CPRE is performed as in PWM mode 1. When counting up, the MO2CPRE is inactive, when a trigger event occurs, the MO2CPRE is active. The MO2CPRE is inactive again at the next update event; When counting down, the MO2CPRE is active. When a trigger event occurs, the MO2CPRE is inactive. The MO2CPRE is active again at the next update event.

1010~1111: Reserved.

If configured in PWM mode, the MO2CPRE level changes only when the output compare mode switches from "Timing" mode to "PWM" mode or the result of the comparison changes.

When the outputs of CH2 and MCH2 are complementary, this bit-field is preloaded. If CCSE =1, this bit-field will only be updated when a channel commutation event is generated.

This bit cannot be modified when PROT[1:0] bit-field in TIMERx_CCHP register is 11 and CH2NMS bit-field is 00(compare mode).

3	MCH2COMSEN	Multi mode channel 2 output compare shadow enable When this bit is set, the shadow register of TIMERx_MCH2CV register, which updates at each update event will be enabled. 0: Multi mode channel 2 output compare shadow disabled 1: Multi mode channel 2 output compare shadow enabled The PWM mode can be used without validating the shadow register only in single pulse mode (SPM bit in TIMERx_CTL0 register is set). This bit cannot be modified when PROT[1:0] bit-field in TIMERx_CCHP register is 11 and CH2NMS bit-field is 00.
2	Reserved	Must be kept at reset value.
1:0	MCH2MS[1:0]	Multi mode channel 2 I/O mode selection This bit-field specifies the work mode of the channel and the input signal selection. This bit-field is writable only when the channel is not active (MCH2EN bit in TIMERx_CHCTL2 register is reset). 000: Multi mode channel 2 is configured as output. 001: Multi mode channel 2 is configured as input, MIS2 is connected to MCI2FEM2. 010: Multi mode channel 2 is configured as input, MIS2 is connected to MCI3FEM2. 011: Multi mode channel 2 is configured as input, MIS2 is connected to ITS. This mode is working only if an internal trigger input is selected (through TSCFG15[4:0] bit-field in SYSCFG_TIMERxCFG2(x=0,7) register). 100: Multi mode channel 2 is configured as input, MIS2 is connected to CI2FEM2. 101~111: Reserved.

Input capture mode:

Bits	Fields	Descriptions
31	MCH3MS[2]	Multi mode channel 1 I/O mode selection Refer to MCH3MS[1:0]description.
30	MCH2MS[2]	Multi mode channel 0 I/O mode selection Refer to MCH2MS[1:0] description.
29:16	Reserved	Must be kept at reset value.
15:12	MCH3CAPFLT[3:0]	Multi mode channel 3 input capture filter control. Refer to MCH2CAPFLT description.
11:10	MCH3CAPPSC[1:0]	Multi mode channel 3 input capture prescaler. Refer to MCH2CAPPSC description.
9:8	MCH3MS[1:0]	Multi mode channel 3 I/O mode selection. Same as output compare mode.
7:4	MCH2CAPFLT[3:0]	Multi mode channel 2 input capture filter control. An event counter is used in the digital filter, in which a transition on the output occurs after N input events. This bit-field specifies the frequency used to sample MCI2 input signal and the length of the digital filter applied to MCI2.

		0000: Filter disabled, $f_{SAMP}=f_{DTS}$, N=1. 0001: $f_{SAMP}=f_{CK_TIMER}$, N=2. 0010: $f_{SAMP}= f_{CK_TIMER}$, N=4. 0011: $f_{SAMP}= f_{CK_TIMER}$, N=8. 0100: $f_{SAMP}=f_{DTS}/2$, N=6. 0101: $f_{SAMP}=f_{DTS}/2$, N=8. 0110: $f_{SAMP}=f_{DTS}/4$, N=6. 0111: $f_{SAMP}=f_{DTS}/4$, N=8. 1000: $f_{SAMP}=f_{DTS}/8$, N=6. 1001: $f_{SAMP}=f_{DTS}/8$, N=8. 1010: $f_{SAMP}=f_{DTS}/16$, N=5. 1011: $f_{SAMP}=f_{DTS}/16$, N=6. 1100: $f_{SAMP}=f_{DTS}/16$, N=8. 1101: $f_{SAMP}=f_{DTS}/32$, N=5. 1110: $f_{SAMP}=f_{DTS}/32$, N=6. 1111: $f_{SAMP}=f_{DTS}/32$, N=8.
3:2	MCH2CAPPSC[1:0]	Multi mode channel 2 input capture prescaler. This bit-field specifies the factor of the prescaler on channel 2 input. The prescaler is reset when MCH2EN bit in TIMERx_CHCTL2 register is cleared. 00: Prescaler disabled, capture is done on each channel input edge. 01: Capture is done every 2 channel input edges. 10: Capture is done every 4 channel input edges. 11: Capture is done every 8 channel input edges.
1:0	MCH2MS[1:0]	Multi mode channel 2 I/O mode selection Same as output compare mode.

Multi mode channel control register 2 (TIMERx_MCHCTL2)

Address offset: 0x50

Reset value: 0x0000 0000

This register can be accessed by half-word(16-bit) or word(32-bit).

31	30	29	28	27	26	25	24	23	22	21	20	19	18	17	16
Reserved															

15	14	13	12	11	10	9	8	7	6	5	4	3	2	1	0
Reserved								MCH3FP[1:0]		MCH2FP[1:0]		MCH1FP[1:0]		MCH0FP[1:0]	
								rw		rw		rw		rw	

Bits	Fields	Descriptions
31:8	Reserved	Must be kept at reset value.

7:6	MCH3FP[1:0]	Multi mode channel 3 capture/compare free polarity Refer to MCH0FP[1:0] description.
5:4	MCH2FP[1:0]	Multi mode channel 2 capture/compare free polarity Refer to MCH0FP[1:0] description.
3:2	MCH1FP[1:0]	Multi mode channel 1 capture/compare free polarity Refer to MCH0FP[1:0] description.
1:0	MCH0FP[1:0]	Multi mode channel 0 capture/compare free polarity When multi mode channel 0 is configured in output mode, and the MCH0MSEL[1:0] = 2b'00, these bits specifie the multi mode channel 0 output signal polarity. 00: Multi mode channel 0 active high 01: Multi mode channel 0 active low 10: Reserved. 11: Reserved. When multi mode channel 0 is configured in input mode, these bits specifie the multi mode channel 0 input signal's polarity. MCH0FP[1:0] will select the active trigger or capture polarity for multi mode channel 0 input signals. 00: Multi mode channel 0 input signal's rising edge is the active signal for capture or trigger operation in slave mode. And multi mode channel 0 input signal will not be inverted. 01: Multi mode channel 0 input signal's falling edge is the active signal for capture or trigger operation in slave mode. And multi mode channel 0 input signal will be inverted. 10: Reserved. 11: Noninverted/both multi mode channel 0 input signal's edges. This bit cannot be modified when PROT[1:0] bit-field in TIMERx_CCHP register is 11 or 10.

Multi mode channel 0 capture/compare value register (TIMERx_MCH0CV)

Address offset: 0x54

Reset value: 0x0000 0000

This register has to be accessed by word (32-bit).

31	30	29	28	27	26	25	24	23	22	21	20	19	18	17	16
Reserved															

15	14	13	12	11	10	9	8	7	6	5	4	3	2	1	0
MCH0VAL[15:0]															
rw															

Bits	Fields	Descriptions
31:16	Reserved	Must be kept at reset value.

15:0	MCH0VAL[15:0]	Capture/compare value of multi mode channel 0. When multi mode channel 0 is configured in input mode, this bit-field indicates the counter value at the last capture event. And this bit-field is read-only. When multi mode channel 0 is configured in output mode, this bit-field contains value to be compared to the counter. When the corresponding shadow register is enabled, the shadow register updates by every update event.

Multi mode channel 1 capture/compare value register (TIMERx_MCH1CV)

Address offset: 0x58

Reset value: 0x0000 0000

This register has to be accessed by word (32-bit).

31	30	29	28	27	26	25	24	23	22	21	20	19	18	17	16
Reserved															

15	14	13	12	11	10	9	8	7	6	5	4	3	2	1	0
MCH1VAL[15:0]															
rw															

Bits	Fields	Descriptions
31:16	Reserved	Must be kept at reset value.
15:0	MCH1VAL[15:0]	Capture/compare value of multi mode channel 1. When multi mode channel 1 is configured in input mode, this bit-field indicates the counter value at the last capture event. And this bit-field is read-only. When multi mode channel 1 is configured in output mode, this bit-field contains value to be compared to the counter. When the corresponding shadow register is enabled, the shadow register updates by every update event.

Multi mode channel 2 capture/compare value register (TIMERx_MCH2CV)

Address offset: 0x5C

Reset value: 0x0000 0000

This register has to be accessed by word (32-bit).

31	30	29	28	27	26	25	24	23	22	21	20	19	18	17	16
Reserved															

15	14	13	12	11	10	9	8	7	6	5	4	3	2	1	0
MCH2VAL[15:0]															
rw															

Bits	Fields	Descriptions

31:16	Reserved	Must be kept at reset value.
15:0	MCH2VAL[15:0]	Capture/compare value of multi mode channel 2. When multi mode channel 2 is configured in input mode, this bit-field indicates the counter value at the last capture event. And this bit-field is read-only. When multi mode channel 2 is configured in output mode, this bit-field contains value to be compared to the counter. When the corresponding shadow register is enabled, the shadow register updates by every update event.

Multi mode channel 3 capture/compare value register (TIMERx_MCH3CV)

Address offset: 0x60

Reset value: 0x0000 0000

This register has to be accessed by word (32-bit).

31	30	29	28	27	26	25	24	23	22	21	20	19	18	17	16
Reserved															

15	14	13	12	11	10	9	8	7	6	5	4	3	2	1	0
MCH3VAL[15:0]															
rw															

Bits	Fields	Descriptions
31:16	Reserved	Must be kept at reset value.
15:0	MCH3VAL[15:0]	Capture/compare value of channel 3. When multi mode channel 3 is configured in input mode, this bit-field indicates the counter value at the last capture event. And this bit-field is read-only. When multi mode channel 3 is configured in output mode, this bit-field contains value to be compared to the counter. When the corresponding shadow register is enabled, the shadow register updates by every update event.

Channel 0 additional compare value register (TIMERx_CH0COMV_ADD)

Address offset: 0x64

Reset value: 0x0000 0000

This register has to be accessed by word (32-bit).

31	30	29	28	27	26	25	24	23	22	21	20	19	18	17	16
Reserved															

15	14	13	12	11	10	9	8	7	6	5	4	3	2	1	0
CH0COMVAL_ADD[15:0]															
rw															

Bits	Fields	Descriptions
31:16	Reserved	Must be kept at reset value.
15:0	CH0COMVAL_ADD [15:0]	Additional compare value of channel 0 When channel 0 is configured in output mode, this bit-field contains value to be compared to the counter. When the corresponding shadow register is enabled, the shadow register updates by every update event. **Note:** This register just used in composite PWM mode(when CH0CPWMEN=1).

Channel 1 additional compare value register (TIMERx_CH1COMV_ADD)

Address offset: 0x68

Reset value: 0x0000 0000

This register has to be accessed by word (32-bit).

31	30	29	28	27	26	25	24	23	22	21	20	19	18	17	16
Reserved															

15	14	13	12	11	10	9	8	7	6	5	4	3	2	1	0
CH1COMVAL_ADD[15:0]															
rw															

Bits	Fields	Descriptions
31:16	Reserved	Must be kept at reset value.
15:0	CH1COMVAL_ADD [15:0]	Additional compare value of channel 1 When channel 1 is configured in output mode, this bit-field contains value to be compared to the counter. When the corresponding shadow register is enabled, the shadow register updates by every update event. **Note:** This register just used in composite PWM mode(when CH0CPWMEN=1).

Channel 2 additional compare value register (TIMERx_CH2COMV_ADD)

Address offset: 0x6C

Reset value: 0x0000 0000

This register has to be accessed by word (32-bit).

31	30	29	28	27	26	25	24	23	22	21	20	19	18	17	16
Reserved															

15	14	13	12	11	10	9	8	7	6	5	4	3	2	1	0
CH2COMVAL_ADD[15:0]															
rw															

Bits	Fields	Descriptions

31:16	Reserved	Must be kept at reset value.
15:0	CH2COMVAL_ADD [15:0]	Additional compare value of channel 2 When channel 2 is configured in output mode, this bit-field contains value to be compared to the counter. When the corresponding shadow register is enabled, the shadow register updates by every update event. **Note:** This register just used in composite PWM mode(when CH0CPWMEN=1).

Channel 3 additional compare value register (TIMERx_CH3COMV_ADD)

Address offset: 0x70

Reset value: 0x0000 0000

This register has to be accessed by word (32-bit).

31	30	29	28	27	26	25	24	23	22	21	20	19	18	17	16
Reserved															

15	14	13	12	11	10	9	8	7	6	5	4	3	2	1	0
CH3COMVAL_ADD[15:0]															
rw															

Bits	Fields	Descriptions
31:16	Reserved	Must be kept at reset value.
15:0	CH3COMVAL_ADD [15:0]	Additional compare value of channel 3 When channel 3 is configured in output mode, this bit-field contains value to be compared to the counter. When the corresponding shadow register is enabled, the shadow register updates by every update event. **Note:** This register just used in composite PWM mode(when CH0CPWMEN=1).

Control register 2 (TIMERx_CTL2)

Address offset: 0x74

Reset value: 0x0FF0 00FF

This register has to be accessed by word (32-bit).

31	30	29	28	27	26	25	24	23	22	21	20	19	18	17	16
CH3C PWMEN	CH2C PWMEN	CH1C PWMEN	CH0C PWMEN	MCH3MSEL[1:0]		MCH2MSEL[1:0]		MCH1MSEL[1:0]		MCH0MSEL[1:0]		DECDISD EN	DECJDEN	Reserved	
rw	rw	rw	rw	rw		rw		rw		rw		rw	rw		

15	14	13	12	11	10	9	8	7	6	5	4	3	2	1	0
CH3OMPSEL[1:0]		CH2OMPSEL[1:0]		CH1OMPSEL[1:0]		CH0OMPSEL[1:0]		BRKEN CH3	BRKEN CH2	BRKEN CH1	BRKEN CH0	DTIEN CH3	DTIEN CH2	DTIEN CH1	DTIEN CH0
rw		rw		rw		rw		rw	rw	rw	rw	rw	rw	rw	rw

Bits	Fields	Descriptions
31	CH3CPWMEN	Channel 3 composite PWM mode enable 0: Disabled 1: Enabled
30	CH2CPWMEN	Channel 2 composite PWM mode enable 0: Disabled 1: Enabled
29	CH1CPWMEN	Channel 1 composite PWM mode enable 0: Disabled 1: Enabled
28	CH0CPWMEN	Channel 0 composite PWM mode enable 0: Disabled 1: Enabled
27:26	MCH3MSEL[1:0]	Multi mode channel 3 mode select 00: Independent mode, MCH3 is independent of CH3 01: Reserved 10: Reserved 11: Complementary mode, only the CH3 is valid for input, and the outputs of MCH3 and CH3 are complementary
25:24	MCH2MSEL[1:0]	Multi mode channel 2 mode select 00: Independent mode, MCH2 is independent of CH2 01: Reserved 10: Reserved 11: Complementary mode, only the CH2 is valid for input, and the outputs of MCH2 and CH2 are complementary
23:22	MCH1MSEL[1:0]	Multi mode channel 1 mode select 00: Independent mode, MCH1 is independent of CH1 01: Reserved 10: Reserved 11: Complementary mode, only the CH1 is valid for input, and the outputs of MCH1 and CH1 are complementary
21:20	MCH0MSEL[1:0]	Multi mode channel 0 mode select 00: Independent mode, MCH0 is independent of CH0 01: Reserved 10: Reserved 11: Complementary mode, only the CH0 is valid for input, and the outputs of MCH0 and CH0 are complementary
19	DECDISDEN	Quadrature decoder signal disconnection detection enable 0: Quadrature decoder signal disconnection detection is disabled

		1: Quadrature decoder signal disconnection detection is enabled
18	DECJDEN	Quadrature decoder signal jump (the two signals jump at the same time) detection enable 0: Quadrature decoder signal jump detection is disabled 1: Quadrature decoder signal jump detection is enabled
17:16	Reserved	Must be kept at reset value.
15:14	CH3OMPSEL[1:0]	Channel 3 output match pulse select When the match events occur, this bit is used to select the output of O3CPRE which drives CH3_O. 00: The O3CPRE signal is output normally with the configuration of CH3COMCTL[2:0] bits. 01: Only the counter is counting up, the O3CPRE signal is output a pulse when the match events occur, and the pulse width is one CK_TIMER clock cycle. 10: Only the counter is counting down, the O3CPRE signal is output a pulse when the match events occur, and the pulse width is one CK_TIMER clock cycle. 11: Both the counter is counting up and counting down, the O3CPRE signal is output a pulse when the match events occur, and the pulse width is one CK_TIMER clock cycle.
13:12	CH2OMPSEL[1:0]	Channel 2 output match pulse select When the match events occur, this bit is used to select the output of O2CPRE which drives CH2_O. 00: The O2CPRE signal is output normal with the configuration of CH2COMCTL[2:0] bits. 01: Only when the counter is counting up, the O2CPRE signal is output a pulse when the match events occurs, and the pulse width is one CK_TIMER clock cycle. 10: Only when the counter is counting down, the O2CPRE signal is output a pulse when the match events occurs, and the pulse width is one CK_TIMER clock cycle. 11: Both when the counter is counting up and counting down, the O2CPRE signal is output a pulse when the match events occurs, and the pulse width is one CK_TIMER clock cycle.
11:10	CH1OMPSEL[1:0]	Channel 1 output match pulse select When the match events occur, this bit is used to select the output of O1CPRE which drives CH1_O. 00: The O1CPRE signal is output normal with the configuration of CH1COMCTL[2:0] bits. 01: Only when the counter is counting up, the O1CPRE signal is output a pulse when the match events occurs, and the pulse width is one CK_TIMER clock cycle. 10: Only when the counter is counting down, the O1CPRE signal is output a pulse when the match events occurs, and the pulse width is one CK_TIMER clock cycle. 11: Both when the counter is counting up and counting down, the O1CPRE signal is output a pulse when the match events occurs, and the pulse width is one

		CK_TIMER clock cycle.
9:8	CH0OMPSEL[1:0]	Channel 0 output match pulse select When the match events occur, this bit is used to select the output of O0CPRE which drives CH0_O. 00: The O0CPRE signal is output normal with the configuration of CH0COMCTL[2:0] bits. 01: Only when the counter is counting up, the O0CPRE signal is output a pulse when the match events occurs, and the pulse width is one CK_TIMER clock cycle. 10: Only when the counter is counting down, the O0CPRE signal is output a pulse when the match events occurs, and the pulse width is one CK_TIMER clock cycle. 11: Both when the counter is counting up and counting down, the O0CPRE signal is output a pulse when the match events occurs, and the pulse width is one CK_TIMER clock cycle.
7	BRKENCH3	Break control enable for channel 3 0: Disabled 1: Enabled
6	BRKENCH2	Break control enable for channel 2 0: Disabled 1: Enabled
5	BRKENCH1	Break control enable for channel 1 0: Disabled 1: Enabled
4	BRKENCH0	Break control enable for channel 0 0: Disabled 1: Enabled
3	DTIENCH3	Dead time inserted enable for channel 3 Enables the deadtime insertion in the outputs of MCH3_O and CH3_O. 0: Disabled 1: Enabled
2	DTIENCH2	Dead time inserted enable for channel 2 Enables the deadtime insertion in the outputs of MCH2_O and CH2_O. 0: Disabled 1: Enabled
1	DTIENCH1	Dead time inserted enable for channel 1 Enables the deadtime insertion in the outputs of MCH1_O and CH1_O. 0: Disabled 1: Enabled

0	DTIENCH0	Dead time inserted enable for channel 0 Enables the deadtime insertion in the outputs of MCH0_O and CH0_O. 0: Disabled 1: Enabled

Free complementary channel protection register 0 (TIMERx_FCCHP0)

Address offset: 0x7C
Reset value: 0x0000 0000

This register has to be accessed by word (32-bit).
This register is used to configure the outputs of CH0_O/MCH0_O.

31	30	29	28	27	26	25	24	23	22	21	20	19	18	17	16
FCCHP0EN	Reserved														
rw															

15	14	13	12	11	10	9	8	7	6	5	4	3	2	1	0
Reserved				ROS	IOS	Reserved		DTCFG[7:0]							
				rw	rw			rw							

Bits	Fields	Descriptions
31	FCCHP0EN	Free complementary channel protection register 0 enable 0: the ROS、IOS and DTCFG[7:0] bits in TIMERx_CCHP register is active 1: the ROS、IOS and DTCFG[7:0] bits in TIMERx_FCCHP0 register is active This bit can be modified only when PROT [1:0] bit-filed in TIMERx_CCHP register is 00.
30:12	Reserved	Must be kept at reset value.
11	ROS	Run mode “off-state” enable When POEN bit is set (Run mode), this bit can be set to enable the “off-state” for the channels which has been configured in output mode. 0: “off-state” disabled. If the CH0EN or CH0NEN bit is reset, the corresponding channel is output disabled. 1: “off-state” enabled. If the CH0EN or CH0NEN bit is reset, the corresponding channel is “off-state”. This bit cannot be modified when PROT [1:0] bit-filed in TIMERx_CCHP register is 10 or 11.
10	IOS	Idle mode “off-state” enable When POEN bit is reset (Idle mode), this bit can be set to enable the “off-state” for the channels which has been configured in output mode. 0: “off-state” disabled. If the CH0EN/CH0NEN bits are both reset, the channels are output disabled. 1: “off-state” enabled. No matter the CH0EN/CH0NEN bits, the channels are “off-

		state”. This bit cannot be modified when PROT [1:0] bit-filed in TIMERx_CCHP register is 10 or 11.
9:8	Reserved	Must be kept at reset value.
7:0	DTCFG[7:0]	Dead time configure This bit-field controls the value of the dead-time, which is inserted before the output transitions. The relationship between DTCFG value and the duration of dead-time is as follow: DTCFG [7:5] =3’b0xx: DTvalue = DTCFG [7:0]x t_{DT}, t_{DT}=t_{DTS}. DTCFG [7:5] =3’b10x: DTvalue = (64+DTCFG [5:0])xt_{DT}, t_{DT} =t_{DTS}*2. DTCFG [7:5] =3’b110: DTvalue = (32+DTCFG [4:0])xt_{DT}, t_{DT}=t_{DTS}*8. DTCFG [7:5] =3’b111: DTvalue = (32+DTCFG [4:0])xt_{DT}, t_{DT} =t_{DTS}*16. This bit can be modified only when PROT [1:0] bit-filed in TIMERx_CCHP register is 00.

Free complementary channel protection register 1 (TIMERx_FCCHP1)

Address offset: 0x80
Reset value: 0x0000 0000

This register has to be accessed by word (32-bit).
This register is used to configure the outputs of CH1_O/MCH1_O.

31	30	29	28	27	26	25	24	23	22	21	20	19	18	17	16
FCCHP1EN	Reserved														
rw															

15	14	13	12	11	10	9	8	7	6	5	4	3	2	1	0
Reserved				ROS	IOS	Reserved		DTCFG[7:0]							
				rw	rw			rw							

Bits	Fields	Descriptions
31	FCCHP1EN	Free complementary channel protection register 1 enable 0: the ROS、IOS and DTCFG[7:0] bits in TIMERx_CCHP register is active 1: the ROS、IOS and DTCFG[7:0] bits in TIMERx_FCCHP1 register is active This bit can be modified only when PROT [1:0] bit-filed in TIMERx_CCHP register is 00.
30:12	Reserved	Must be kept at reset value.
11	ROS	Run mode “off-state” enable When POEN bit is set (Run mode), this bit can be set to enable the “off-state” for the channels which has been configured in output mode. 0: “off-state” disabled. If the CH1EN or CH1NEN bit is reset, the corresponding

		channel is output disabled. 1: “off-state” enabled. If the CH1EN or CH1NEN bit is reset, the corresponding channel is “off-state”. This bit cannot be modified when PROT [1:0] bit-filed in TIMERx_CCHP register is 10 or 11.
10	IOS	Idle mode “off-state” enable When POEN bit is reset (Idle mode), this bit can be set to enable the “off-state” for the channels which has been configured in output mode. 0: “off-state” disabled. If the CH1EN/CH1NEN bits are both reset, the channels are output disabled. 1: “off-state” enabled. No matter the CH1EN/CH1NEN bits, the channels are “off-state”. This bit cannot be modified when PROT [1:0] bit-filed in TIMERx_CCHP register is 10 or 11.
9:8	Reserved	Must be kept at reset value.
7:0	DTCFG[7:0]	Dead time configure This bit-field controls the value of the dead-time, which is inserted before the output transitions. The relationship between DTCFG value and the duration of dead-time is as follow: DTCFG [7:5] =3’b0xx: DTvalue = DTCFG [7:0]x t_{DT}, t_{DT}=t_{DTS}. DTCFG [7:5] =3’b10x: DTvalue = (64+DTCFG [5:0])xt_{DT}, t_{DT} =t_{DTS}*2. DTCFG [7:5] =3’b110: DTvalue = (32+DTCFG [4:0])xt_{DT}, t_{DT}=t_{DTS}*8. DTCFG [7:5] =3’b111: DTvalue = (32+DTCFG [4:0])xt_{DT}, t_{DT} =t_{DTS}*16. This bit can be modified only when PROT [1:0] bit-filed in TIMERx_CCHP register is 00.

Free complementary channel protection register 2 (TIMERx_FCCHP2)

Address offset: 0x84
Reset value: 0x0000 0000

This register has to be accessed by word (32-bit).
This register is used to configure the outputs of CH2_O/MCH2_O.

31	30	29	28	27	26	25	24	23	22	21	20	19	18	17	16
FCCHP2EN	Reserved														
rw															

15	14	13	12	11	10	9	8	7	6	5	4	3	2	1	0
Reserved				ROS	IOS	Reserved		DTCFG[7:0]							
				rw	rw			rw							

Bits	Fields	Descriptions

31	FCCHP2EN	Free complementary channel protection register 2 enable 0: the ROS、IOS and DTCFG[7:0] bits in TIMERx_CCHP register is active 1: the ROS、IOS and DTCFG[7:0] bits in TIMERx_FCCHP2 register is active This bit can be modified only when PROT [1:0] bit-filed in TIMERx_CCHP register is 00.
30:12	Reserved	Must be kept at reset value.
11	ROS	Run mode “off-state” enable When POEN bit is set (Run mode), this bit can be set to enable the “off-state” for the channels which has been configured in output mode. 0: “off-state” disabled. If the CH2EN or CH2NEN bit is reset, the corresponding channel is output disabled. 1: “off-state” enabled. If the CH2EN or CH2NEN bit is reset, the corresponding channel is “off-state”. This bit cannot be modified when PROT [1:0] bit-filed in TIMERx_CCHP register is 10 or 11.
10	IOS	Idle mode “off-state” enable When POEN bit is reset (Idle mode), this bit can be set to enable the “off-state” for the channels which has been configured in output mode. 0: “off-state” disabled. If the CH2EN/CH2NEN bits are both reset, the channels are output disabled. 1: “off-state” enabled. No matter the CH2EN/CH2NEN bits, the channels are “off-state”. This bit cannot be modified when PROT [1:0] bit-filed in TIMERx_CCHP register is 10 or 11.
9:8	Reserved	Must be kept at reset value.
7:0	DTCFG[7:0]	Dead time configure This bit-field controls the value of the dead-time, which is inserted before the output transitions. The relationship between DTCFG value and the duration of dead-time is as follow: DTCFG [7:5] =3’b0xx: DTvalue = DTCFG [7:0]x t_{DT}, t_{DT}=t_{DTS}. DTCFG [7:5] =3’b10x: DTvalue = (64+DTCFG [5:0])xt_{DT}, t_{DT} =t_{DTS}*2. DTCFG [7:5] =3’b110: DTvalue = (32+DTCFG [4:0])xt_{DT}, t_{DT}=t_{DTS}*8. DTCFG [7:5] =3’b111: DTvalue = (32+DTCFG [4:0])xt_{DT}, t_{DT} =t_{DTS}*16. This bit can be modified only when PROT [1:0] bit-filed in TIMERx_CCHP register is 00.

Free complementary channel protection register 3 (TIMERx_FCCHP3)

Address offset: 0x88
Reset value: 0x0000 0000

This register has to be accessed by word (32-bit).

This register is used to configure the outputs of CH3_O/MCH3_O.

31	30	29	28	27	26	25	24	23	22	21	20	19	18	17	16
FCCHP3EN	Reserved														
rw															

15	14	13	12	11	10	9	8	7	6	5	4	3	2	1	0
Reserved				ROS	IOS	Reserved		DTCFG[7:0]							
				rw	rw			rw							

Bits	Fields	Descriptions
31	FCCHP3EN	Free complementary channel protection register 0 enable 0: the ROS、IOS and DTCFG[7:0] bits in TIMERx_CCHP register is active 1: the ROS、IOS and DTCFG[7:0] bits in TIMERx_FCCHP3 register is active This bit can be modified only when PROT [1:0] bit-filed in TIMERx_CCHP register is 00.
30:12	Reserved	Must be kept at reset value.
11	ROS	Run mode “off-state” enable When POEN bit is set (Run mode), this bit can be set to enable the “off-state” for the channels which has been configured in output mode. 0: “off-state” disabled. If the CH3EN or CH3NEN bit is reset, the corresponding channel is output disabled. 1: “off-state” enabled. If the CH3EN or CH3NEN bit is reset, the corresponding channel is “off-state”. This bit cannot be modified when PROT [1:0] bit-filed in TIMERx_CCHP register is 10 or 11.
10	IOS	Idle mode “off-state” enable When POEN bit is reset (Idle mode), this bit can be set to enable the “off-state” for the channels which has been configured in output mode. 0: “off-state” disabled. If the CH3EN/CH3NEN bits are both reset, the channels are output disabled. 1: “off-state” enabled. No matter the CH3EN/CH3NEN bits, the channels are “off-state”. This bit cannot be modified when PROT [1:0] bit-filed in TIMERx_CCHP register is 10 or 11.
9:8	Reserved	Must be kept at reset value.
7:0	DTCFG[7:0]	Dead time configure This bit-field controls the value of the dead-time, which is inserted before the output transitions. The relationship between DTCFG value and the duration of dead-time is as follow: DTCFG [7:5] =3’b0xx: DTvalue = DTCFG [7:0]x t_{DT}, t_{DT}=t_{DTS}.

DTCFG [7:5] =3'b10x: DTvalue = (64+DTCFG [5:0])xt_{DT}, t_{DT} =t_{DTS}*2.

DTCFG [7:5] =3'b110: DTvalue = (32+DTCFG [4:0])xt_{DT}, t_{DT}=t_{DTS}*8.

DTCFG [7:5] =3'b111: DTvalue = (32+DTCFG [4:0])xt_{DT}, t_{DT} =t_{DTS}*16.

This bit can be modified only when PROT [1:0] bit-filed in TIMERx_CCHP register is 00.

TIMER0 alternate function control register 0 (TIMER0_AFCTL0)

Address offset: 0x8C

Reset value: 0x0000 0007

This register has to be accessed by word (32-bit).

31	30	29	28	27	26	25	24	23	22	21	20	19	18	17	16
Reserved					BRK0CMP1P	BRK0CMP0P	Reserved						BRK0IN2P	BRK0IN1P	BRK0IN0P
					rw	rw							rw	rw	rw

15	14	13	12	11	10	9	8	7	6	5	4	3	2	1	0
Reserved					BRK0CMP1EN	BRK0CMP0EN	BRK0HPDFEN	Reserved					BRK0IN2EN	BRK0IN1EN	BRK0IN0EN
					rw	rw	rw						rw	rw	rw

Bits	Fields	Descriptions
31:27	Reserved	Must be kept at reset value.
26	BRK0CMP1P	BREAK0 CMP1 input polarity This bit is used to configure the CMP1 input polarity, and the specific polarity is determined by this bit and the BRK0P bit. 0: CMP1 input signal will not be inverted (BRK0P =0, the input signal is active low; BRK0P =1, the input signal is active high) 1: CMP1 input signal will be inverted (BRK0P=0, the input signal is active high; BRK0P =1, the input signal is active low) This bit can be modified only when PROT[1:0] bit-field in TIMERx_CCHP register is 00.
25	BRK0CMP0P	BREAK0 CMP0 input polarity This bit is used to configure the CMP0 input polarity, and the specific polarity is determined by this bit and the BRK0P bit. 0: CMP0 input signal will not be inverted (BRK0P =0, the input signal is active low; BRK0P =1, the input signal is active high) 1: CMP0 input signal will be inverted (BRK0P=0, the input signal is active high; BRK0P =1, the input signal is active low) This bit can be modified only when PROT[1:0] bit-field in TIMERx_CCHP register is 00.

24:19	Reserved	Must be kept at reset value.
18	BRK0IN2P	BREAK0 BRKIN2 alternate function input polarity This bit is used to configure the BRKIN2 input polarity, and the specific polarity is determined by this bit and the BRK0P bit. 0: BRKIN2 input signal will not be inverted (BRK0P =0, the input signal is active low; BRK0P =1, the input signal is active high) 1: BRKIN2 input signal will be inverted (BRK0P=0, the input signal is active high; BRK0P =1, the input signal is active low) This bit can be modified only when PROT[1:0] bit-field in TIMERx_CCHP register is 00.
17	BRK0IN1P	BREAK0 BRKIN1 alternate function input polarity This bit is used to configure the BRKIN1 input polarity, and the specific polarity is determined by this bit and the BRK0P bit. 0: BRKIN1 input signal will not be inverted (BRK0P =0, the input signal is active low; BRK0P =1, the input signal is active high) 1: BRKIN1 input signal will be inverted (BRK0P=0, the input signal is active high; BRK0P =1, the input signal is active low) This bit can be modified only when PROT[1:0] bit-field in TIMERx_CCHP register is 00.
16	BRK0IN0P	BREAK0 BRKIN0 alternate function input polarity This bit is used to configure the BRKIN0 input polarity, and the specific polarity is determined by this bit and the BRK0P bit. 0: BRKIN0 input signal will not be inverted (BRK0P =0, the input signal is active low; BRK0P =1, the input signal is active high) 1: BRKIN0 input signal will be inverted (BRK0P=0, the input signal is active high; BRK0P =1, the input signal is active low) This bit can be modified only when PROT[1:0] bit-field in TIMERx_CCHP register is 00.
15:11	Reserved	Must be kept at reset value.
10	BRK0CMP1EN	BREAK0 CMP1 enable 0: CMP1 input disabled 1: CMP1 input enabled This bit can be modified only when PROT[1:0] bit-field in TIMERx_CCHP register is 00.
9	BRK0CMP0EN	BREAK0 CMP0 enable 0: CMP0 input disabled 1: CMP0 input enabled This bit can be modified only when PROT[1:0] bit-field in TIMERx_CCHP register is 00.
8	BRK0HPDFEN	BREAK0 HPDF input(hpdf_break[0]) enable

		0: HPDF input disabled 1: HPDF input enabled This bit can be modified only when PROT[1:0] bit-field in TIMERx_CCHP register is 00.
7:3	Reserved	Must be kept at reset value.
2	BRK0IN2EN	BREAK0 BRKIN2 alternate function input enable 0: BRKIN2 alternate function input disabled 1: BRKIN2 alternate function input enabled This bit can be modified only when PROT[1:0] bit-field in TIMERx_CCHP register is 00.
1	BRK0IN1EN	BREAK0 BRKIN1 alternate function input enable 0: BRKIN1 alternate function input disabled 1: BRKIN1 alternate function input enabled This bit can be modified only when PROT[1:0] bit-field in TIMERx_CCHP register is 00.
0	BRK0IN0EN	BREAK0 BRKIN0 alternate function input enable 0: BRKIN0 alternate function input disabled 1: BRKIN0 alternate function input enabled This bit can be modified only when PROT[1:0] bit-field in TIMERx_CCHP register is 00.

TIMER0 alternate function control register 1 (TIMER0_AFCTL1)

Address offset: 0x90

Reset value: 0x0000 0000

This register has to be accessed by word (32-bit).

31	30	29	28	27	26	25	24	23	22	21	20	19	18	17	16
Reserved					BRK1CMP1P	BRK1CMP0P	Reserved						BRK1IN2P	BRK1IN1P	BRK1IN0P
					rw	rw							rw	rw	rw

15	14	13	12	11	10	9	8	7	6	5	4	3	2	1	0
Reserved					BRK1CMP1EN	BRK1CMP0EN	BRK1HPDFEN	Reserved					BRK1IN2EN	BRK1IN1EN	BRK1IN0EN
					rw	rw	rw						rw	rw	rw

Bits	Fields	Descriptions
31:27	Reserved	Must be kept at reset value.
26	BRK1CMP1P	BREAK1 CMP1 input polarity This bit is used to configure the CMP1 input polarity, and the specific polarity is determined by this bit and the BRK1P bit.

		0: CMP1 input signal will not be inverted (BRK1P =0, the input signal is active low; BRK1P =1, the input signal is active high) 1: CMP1 input signal will be inverted (BRK1P =0, the input signal is active high; BRK1P =1, the input signal is active low) This bit can be modified only when PROT[1:0] bit-field in TIMERx_CCHP register is 00.
25	BRK1CMP0P	BREAK1 CMP0 input polarity This bit is used to configure the CMP0 input polarity, and the specific polarity is determined by this bit and the BRK1P bit. 0: CMP0 input signal will not be inverted (BRK1P =0, the input signal is active low; BRK1P =1, the input signal is active high) 1: CMP0 input signal will be inverted (BRK1P =0, the input signal is active high; BRK1P =1, the input signal is active low) This bit can be modified only when PROT[1:0] bit-field in TIMERx_CCHP register is 00.
24:19	Reserved	Must be kept at reset value.
18	BRK1IN2P	BREAK1 BRKIN2 alternate function input polarity This bit is used to configure the BRKIN2 input polarity, and the specific polarity is determined by this bit and the BRK1P bit. 0: BRKIN2 input signal will not be inverted (BRK1P =0, the input signal is active low; BRKP =1, the input signal is active high) 1: BRKIN2 input signal will be inverted (BRK1P =0, the input signal is active high; BRK1P =1, the input signal is active low) This bit can be modified only when PROT[1:0] bit-field in TIMERx_CCHP register is 00.
17	BRK1IN1P	BREAK1 BRKIN1 alternate function input polarity This bit is used to configure the BRKIN1 input polarity, and the specific polarity is determined by this bit and the BRK1P bit. 0: BRKIN1 input signal will not be inverted (BRK1P =0, the input signal is active low; BRKP =1, the input signal is active high) 1: BRKIN1 input signal will be inverted (BRK1P =0, the input signal is active high; BRK1P =1, the input signal is active low) This bit can be modified only when PROT[1:0] bit-field in TIMERx_CCHP register is 00.
16	BRK1IN0P	BREAK1 BRKIN0 alternate function input polarity This bit is used to configure the BRKIN0 input polarity, and the specific polarity is determined by this bit and the BRK1P bit. 0: BRKIN0 input signal will not be inverted (BRK1P =0, the input signal is active low; BRKP =1, the input signal is active high) 1: BRKIN0 input signal will be inverted (BRK1P =0, the input signal is active high; BRK1P =1, the input signal is active low)

		This bit can be modified only when PROT[1:0] bit-field in TIMERx_CCHP register is 00.
15:11	Reserved	Must be kept at reset value.
10	BRK1CMP1EN	BREAK1 CMP1 enable 0: CMP1 input disabled 1: CMP1 input enabled This bit can be modified only when PROT[1:0] bit-field in TIMERx_CCHP register is 00.
9	BRK1CMP0EN	BREAK1 CMP0 enable 0: CMP0 input disabled 1: CMP0 input enabled This bit can be modified only when PROT[1:0] bit-field in TIMERx_CCHP register is 00.
8	BRK1HPDFEN	BREAK1 HPDF input(hpdf_break[1]) enable 0: HPDF input disabled 1: HPDF input enabled This bit can be modified only when PROT[1:0] bit-field in TIMERx_CCHP register is 00.
7:3	Reserved	Must be kept at reset value.
2	BRK1IN2EN	BREAK1 BRKIN2 alternate function input enable 0: BRKIN2 alternate function input disabled 1: BRKIN2 alternate function input enabled This bit can be modified only when PROT[1:0] bit-field in TIMERx_CCHP register is 00.
1	BRK1IN1EN	BREAK1 BRKIN1 alternate function input enable 0: BRKIN1 alternate function input disabled 1: BRKIN1 alternate function input enabled This bit can be modified only when PROT[1:0] bit-field in TIMERx_CCHP register is 00.
0	BRK1IN0EN	BREAK1 BRKIN0 alternate function input enable 0: BRKIN0 alternate function input disabled 1: BRKIN0 alternate function input enabled This bit can be modified only when PROT[1:0] bit-field in TIMERx_CCHP register is 00.

TIMER7 alternate function control register 0 (TIMER7_AFCTL0)

Address offset: 0x8C

Reset value: 0x0000 0007

This register has to be accessed by word (32-bit).

31	30	29	28	27	26	25	24	23	22	21	20	19	18	17	16
Reserved					BRK0CMP1P	BRK0CMP0P	Reserved						BRK0IN2P	BRK0IN1P	BRK0IN0P
					rw	rw							rw	rw	rw

15	14	13	12	11	10	9	8	7	6	5	4	3	2	1	0
Reserved					BRK0CMP1EN	BRK0CMP0EN	BRK0HPDFEN	Reserved					BRK0IN2EN	BRK0IN1EN	BRK0IN0EN
					rw	rw	rw						rw	rw	rw

Bits	Fields	Descriptions
31:27	Reserved	Must be kept at reset value.
26	BRK0CMP1P	BREAK0 CMP1 input polarity This bit is used to configure the CMP1 input polarity, and the specific polarity is determined by this bit and the BRK0P bit. 0: CMP1 input signal will not be inverted (BRK0P =0, the input signal is active low; BRK0P =1, the input signal is active high) 1: CMP1 input signal will be inverted (BRK0P=0, the input signal is active high; BRK0P =1, the input signal is active low) This bit can be modified only when PROT[1:0] bit-field in TIMERx_CCHP register is 00.
25	BRK0CMP0P	BREAK0 CMP0 input polarity This bit is used to configure the CMP0 input polarity, and the specific polarity is determined by this bit and the BRK0P bit. 0: CMP0 input signal will not be inverted (BRK0P =0, the input signal is active low; BRK0P =1, the input signal is active high) 1: CMP0 input signal will be inverted (BRK0P=0, the input signal is active high; BRK0P =1, the input signal is active low) This bit can be modified only when PROT[1:0] bit-field in TIMERx_CCHP register is 00.
24:19	Reserved	Must be kept at reset value.
18	BRK0IN2P	BREAK0 BRKIN2 alternate function input polarity This bit is used to configure the BRKIN2 input polarity, and the specific polarity is determined by this bit and the BRK0P bit. 0: BRKIN2 input signal will not be inverted (BRK0P =0, the input signal is active low; BRK0P =1, the input signal is active high) 1: BRKIN2 input signal will be inverted (BRK0P=0, the input signal is active high; BRK0P =1, the input signal is active low) This bit can be modified only when PROT[1:0] bit-field in TIMERx_CCHP register is 00.

17	BRK0IN1P	BREAK0 BRKIN1 alternate function input polarity This bit is used to configure the BRKIN1 input polarity, and the specific polarity is determined by this bit and the BRK0P bit. 0: BRKIN1 input signal will not be inverted (BRK0P =0, the input signal is active low; BRK0P =1, the input signal is active high) 1: BRKIN1 input signal will be inverted (BRK0P=0, the input signal is active high; BRK0P =1, the input signal is active low) This bit can be modified only when PROT[1:0] bit-field in TIMERx_CCHP register is 00.
16	BRK0IN0P	BREAK0 BRKIN0 alternate function input polarity This bit is used to configure the BRKIN0 input polarity, and the specific polarity is determined by this bit and the BRK0P bit. 0: BRKIN0 input signal will not be inverted (BRK0P =0, the input signal is active low; BRK0P =1, the input signal is active high) 1: BRKIN0 input signal will be inverted (BRK0P=0, the input signal is active high; BRK0P =1, the input signal is active low) This bit can be modified only when PROT[1:0] bit-field in TIMERx_CCHP register is 00.
15:11	Reserved	Must be kept at reset value.
10	BRK0CMP1EN	BREAK0 CMP1 enable 0: CMP1 input disabled 1: CMP1 input enabled This bit can be modified only when PROT[1:0] bit-field in TIMERx_CCHP register is 00.
9	BRK0CMP0EN	BREAK0 CMP0 enable 0: CMP0 input disabled 1: CMP0 input enabled This bit can be modified only when PROT[1:0] bit-field in TIMERx_CCHP register is 00.
8	BRK0HPDFEN	BREAK0 HPDF input(hpdf_break[0]) enable 0: HPDF input disabled 1: HPDF input enabled This bit can be modified only when PROT[1:0] bit-field in TIMERx_CCHP register is 00.
7:3	Reserved	Must be kept at reset value.
2	BRK0IN2EN	BREAK0 BRKIN2 alternate function input enable 0: BRKIN2 alternate function input disabled 1: BRKIN2 alternate function input enabled This bit can be modified only when PROT[1:0] bit-field in TIMERx_CCHP register is 00.

1	BRK0IN1EN	BREAK0 BRKIN1 alternate function input enable 0: BRKIN1 alternate function input disabled 1: BRKIN1 alternate function input enabled This bit can be modified only when PROT[1:0] bit-field in TIMERx_CCHP register is 00.
0	BRK0IN0EN	BREAK0 BRKIN0 alternate function input enable 0: BRKIN0 alternate function input disabled 1: BRKIN0 alternate function input enabled This bit can be modified only when PROT[1:0] bit-field in TIMERx_CCHP register is 00.

TIMER7 alternate function control register 1 (TIMER7_AFCTL1)

Address offset: 0x90

Reset value: 0x0000 0000

This register has to be accessed by word (32-bit).

31	30	29	28	27	26	25	24	23	22	21	20	19	18	17	16
Reserved					BRK1CMP1P	BRK1CMP0P	Reserved						BRK1IN2P	BRK1IN1P	BRK1IN0P
					rw	rw							rw	rw	rw

15	14	13	12	11	10	9	8	7	6	5	4	3	2	1	0
Reserved					BRK1CMP1EN	BRK1CMP0EN	BRK1HPDFEN	Reserved					BRK1IN2EN	BRK1IN1EN	BRK1IN0EN
					rw	rw	rw						rw	rw	rw

Bits	Fields	Descriptions
31:27	Reserved	Must be kept at reset value.
26	BRK1CMP1P	BREAK1 CMP1 input polarity This bit is used to configure the CMP1 input polarity, and the specific polarity is determined by this bit and the BRK1P bit. 0: CMP1 input signal will not be inverted (BRK1P =0, the input signal is active low; BRK1P =1, the input signal is active high) 1: CMP1 input signal will be inverted (BRK1P =0, the input signal is active high; BRK1P =1, the input signal is active low) This bit can be modified only when PROT[1:0] bit-field in TIMERx_CCHP register is 00.
25	BRK1CMP0P	BREAK1 CMP0 input polarity This bit is used to configure the CMP0 input polarity, and the specific polarity is determined by this bit and the BRK1P bit. 0: CMP0 input signal will not be inverted (BRK1P =0, the input signal is active low; BRK1P =1, the input signal is active high)

		1: CMP0 input signal will be inverted (BRK1P =0, the input signal is active high; BRK1P =1, the input signal is active low) This bit can be modified only when PROT[1:0] bit-field in TIMERx_CCHP register is 00.
24:19	Reserved	Must be kept at reset value.
18	BRK1IN2P	BREAK1 BRKIN2 alternate function input polarity This bit is used to configure the BRKIN2 input polarity, and the specific polarity is determined by this bit and the BRK1P bit. 0: BRKIN2 input signal will not be inverted (BRK1P =0, the input signal is active low; BRKP =1, the input signal is active high) 1: BRKIN2 input signal will be inverted (BRK1P =0, the input signal is active high; BRK1P =1, the input signal is active low) This bit can be modified only when PROT[1:0] bit-field in TIMERx_CCHP register is 00.
17	BRK1IN1P	BREAK1 BRKIN1 alternate function input polarity This bit is used to configure the BRKIN1 input polarity, and the specific polarity is determined by this bit and the BRK1P bit. 0: BRKIN1 input signal will not be inverted (BRK1P =0, the input signal is active low; BRKP =1, the input signal is active high) 1: BRKIN1 input signal will be inverted (BRK1P =0, the input signal is active high; BRK1P =1, the input signal is active low) This bit can be modified only when PROT[1:0] bit-field in TIMERx_CCHP register is 00.
16	BRK1IN0P	BREAK1 BRKIN0 alternate function input polarity This bit is used to configure the BRKIN0 input polarity, and the specific polarity is determined by this bit and the BRK1P bit. 0: BRKIN0 input signal will not be inverted (BRK1P =0, the input signal is active low; BRKP =1, the input signal is active high) 1: BRKIN0 input signal will be inverted (BRK1P =0, the input signal is active high; BRK1P =1, the input signal is active low) This bit can be modified only when PROT[1:0] bit-field in TIMERx_CCHP register is 00.
15:11	Reserved	Must be kept at reset value.
10	BRK1CMP1EN	BREAK1 CMP1 enable 0: CMP1 input disabled 1: CMP1 input enabled This bit can be modified only when PROT[1:0] bit-field in TIMERx_CCHP register is 00.
9	BRK1CMP0EN	BREAK1 CMP0 enable 0: CMP0 input disabled

		1: CMP0 input enabled This bit can be modified only when PROT[1:0] bit-field in TIMERx_CCHP register is 00.
8	BRK1HPDFEN	BREAK1 HPDF input(hpdf_break[1]) enable 0: HPDF input disabled 1: HPDF input enabled This bit can be modified only when PROT[1:0] bit-field in TIMERx_CCHP register is 00.
7:3	Reserved	Must be kept at reset value.
2	BRK1IN2EN	BREAK1 BRKIN2 alternate function input enable 0: BRKIN2 alternate function input disabled 1: BRKIN2 alternate function input enabled This bit can be modified only when PROT[1:0] bit-field in TIMERx_CCHP register is 00.
1	BRK1IN1EN	BREAK1 BRKIN1 alternate function input enable 0: BRKIN1 alternate function input disabled 1: BRKIN1 alternate function input enabled This bit can be modified only when PROT[1:0] bit-field in TIMERx_CCHP register is 00.
0	BRK1IN0EN	BREAK1 BRKIN0 alternate function input enable 0: BRKIN0 alternate function input disabled 1: BRKIN0 alternate function input enabled This bit can be modified only when PROT[1:0] bit-field in TIMERx_CCHP register is 00.

Watchdog counter period register(TIMERx_WDGPER)

Address offset: 0x94
Reset value: 0xFFFF FFFF

This register has to be accessed by word (32-bit).

31	30	29	28	27	26	25	24	23	22	21	20	19	18	17	16
WDGPER[31:16]															
rw															

15	14	13	12	11	10	9	8	7	6	5	4	3	2	1	0
WDGPER[15:0]															
rw															

Bits	Fields	Descriptions
31:0	WDGPER[31:0]	Watchdog counter period value This register contains the period of the two watchdog counter. When the counters

countius to count to this value, the counter will timeout and the interrupt flag DECDISIF is set. If DECDISIE=1, the corresponding interrupt is generated.

Note: This register is just used in quadrature decoder signal disconnection detection function(with DECDISDEN =1).

Counter repetition register 1 (TIMERx_CREP1)

Address offset: 0x98

Reset value: 0x0000 0000

This register has to be accessed by word (32-bit).

31	30	29	28	27	26	25	24	23	22	21	20	19	18	17	16
CREP1[31:16]															
rw															

15	14	13	12	11	10	9	8	7	6	5	4	3	2	1	0
CREP1[15:0]															
rw															

Bits	Fields	Descriptions
31:0	CREP1[31:0]	Counter repetition value 1 This bit-field is 32 bits and can be read on the fly. This bit-field specifies the update event generation rate. Each time the repetition counter counts down to zero, an update event will be generated. The update rate of the shadow registers is also affected by this bit-field when these shadow registers are enabled. **Note**: This bit-field just used with CREPSEL =1(in TIMERx_CFG register).

DMA configuration register (TIMERx_DMACFG)

Address offset: 0xE0

Reset value: 0x0000 0000

This register has to be accessed by word (32-bit).

31	30	29	28	27	26	25	24	23	22	21	20	19	18	17	16
Reserved															

15	14	13	12	11	10	9	8	7	6	5	4	3	2	1	0
Reserved		DMATC[5:0]						Reserved		DMATA[5:0]					
		rw								rw					

Bits	Fields	Descriptions
31:14	Reserved	Must be kept at reset value.
13:8	DMATC[5:0]	DMA transfer count

		This field defines the times of accessing(R/W) the TIMERx_DMATB register by DMA. 6'b000000: transfer 1 time 6'b000001: transfer 2 times … 6'b100101: transfer 38 times
7:6	Reserved	Must be kept at reset value.
5:0	DMATA[5:0]	DMA transfer access start address This field defines the start address of accessing the TIMERx_DMATB register by DMA. When the first access to the TIMERx_DMATB register is done, this bit-field specifies the address just accessed. And then the address of the second access to the TIMERx_DMATB register will be (start address + 0x4). 6'b000000: TIMERx_CTL0 6'b000001: TIMERx_CTL1 … 6'b100101: TIMERx_CREP1 In a word: start address = TIMERx_CTL0 + DMATA*4

DMA transfer buffer register (TIMERx_DMATB)

Address offset: 0xE4

Reset value: 0x0000 0000

This register has to be accessed by word (32-bit).

31	30	29	28	27	26	25	24	23	22	21	20	19	18	17	16
DMATB[31:16]															
rw															

15	14	13	12	11	10	9	8	7	6	5	4	3	2	1	0
DMATB[15:0]															
rw															

Bits	Fields	Descriptions
31:0	DMATB[31:0]	DMA transfer buffer When a read or write operation is assigned to this register, the register located at the address ranges from (start address) to (start address + transfer count * 4) will be accessed. The transfer count is calculated by hardware, and ranges from 0 to DMATC.

Configuration register (TIMERx_CFG)

Address offset: 0xFC

Reset value: 0x0000 0000

This register has to be accessed by word (32-bit).

31	30	29	28	27	26	25	24	23	22	21	20	19	18	17	16
Reserved															

15	14	13	12	11	10	9	8	7	6	5	4	3	2	1	0
Reserved												CCUSEL	CREPSEL	CHVSEL	OUTSEL
												rw	rw	rw	rw

Bits	Fields	Descriptions
31:4	Reserved	Must be kept at reset value.
3	CCUSEL	Commutation control shadow register update select This bit is valid only when the CCUC[2:0] bit-field are set to 100, 101 and 110. 0: The shadow registers update when the counter generates an overflow/ underflow event. 1: The shadow registers update when the counter generates an overflow/ underflow event and the repetition counter value is zero.
2	CREPSEL	The counter repetition register select This bit is used to select the counter repetition register. 0: The update event rate is depended to TIMERx_CREP0 register 1: The update event rate is depended to TIMERx_CREP1 register
1	CHVSEL	Write CHxVAL register selection bit This bit-field is set and reset by software. 1: If the value to be written to the CHxVAL register is the same as the value of CHxVAL register, the write access is ignored. 0: No effect.
0	OUTSEL	The output value selection bit This bit-field is set and reset by software. 1: If POEN bit and IOS bit are 0, the output is disabled. 0: No effect.

24.2. General level0 timer (TIMERx, x=1,2,3,4,22,23,30,31)

24.2.1. Overview

The general level0 timer module (TIMER1/2/3/4/22/23/30/31) is a four-channel timer that supports input capture and output compare. They can generate PWM signals to control motor or be used for power management applications. The general level0 timer has a 16-bit or 32-bit counter that can be used as an unsigned counter.

In addition, the general level0 timers can be programmed and be used for counting, their external events can be used to drive other timers.

Timers are completely independent with each other, but they may be synchronized to provide a larger timer with their counter value increasing in unison.

24.2.2. Characteristics

- Total channel num: 4.
- Counter width: 16 bits(TIMER2/3/30/31) or 32 bits(TIMER1/4/22/23).
- Selectable clock source: internal clock, internal trigger, external input, external trigger.
- Multiple counter modes: up counting, down counting and center-aligned counting.
- Quadrature decoder: used for motion tracking and determination of both rotation direction and position.
- Hall sensor function: used for 3-phase motor control.
- Programmable prescaler: 16 bits. The factor can be changed ongoing.
- Each channel is user-configurable: input capture mode, output compare mode, programmable PWM mode and single pulse mode.
- Auto reload function.
- Interrupt output or DMA request: update event, trigger event and compare/capture event.
- Daisy chaining of timer module allows a single timer to start multiple timers.
- Timer synchronization allows the selected timers to start counting on the same clock cycle.
- Timer master-slave management.

24.2.3. Block diagram

Figure 24-50. General Level 0 timer block diagram provides details on the internal configuration of the general level 0 timer.

Figure 24-50. General Level 0 timer block diagram

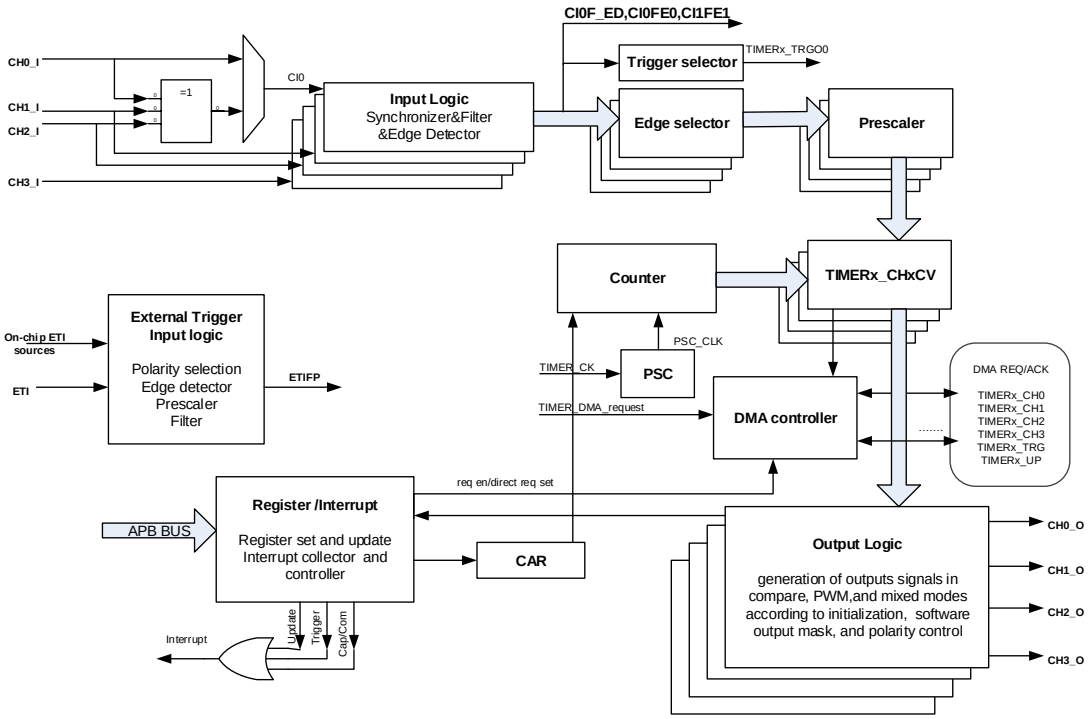

24.2.4. Function overview

Clock selection

The general level0 TIMER has the capability of being clocked by either the CK_TIMER or an alternate clock source controlled by TSCFGy[4:0] (y=0..9,15) in SYSCFG_TIMERxCFG(x=1..4,22,23,30,31) registers.

- TSCFGy[4:0] (y=0..9,15) in SYSCFG_TIMERxCFG(x=1..4,22,23,30,31) registers. Internal clock CK_TIMER is selected as timer clock source which is from module RCU.

The default clock source is the CK_TIMER for driving the counter prescaler when TSCFGy[4:0] (y=0..9,15) = 5’b00000 in SYSCFG_TIMERxCFG(x=1..4,22,23,30,31) registers. When the CEN is set, the CK_TIMER will be divided by PSC value to generate PSC_CLK.

In this mode, the TIMER_CK which drives counter’s prescaler to count is equal to CK_TIMER which is from RCU module.

If TSCFGy[4:0] (y=0..2,6,8,9) in SYSCFG_TIMERxCFG(x=1..4,22,23,30,31) registers are setting to an available value, the prescaler is clocked by other clock sources selected in the TSCFGy[4:0] (y=0..2,6,8,9) bit-filed, more details will be introduced later. When the TSCFGy[4:0] (y=3,4,5,7) are setting to an available value, the internal clock TIMER_CK is the counter prescaler driving clock source.

Figure 24-51. Normal mode, internal clock divided by 1

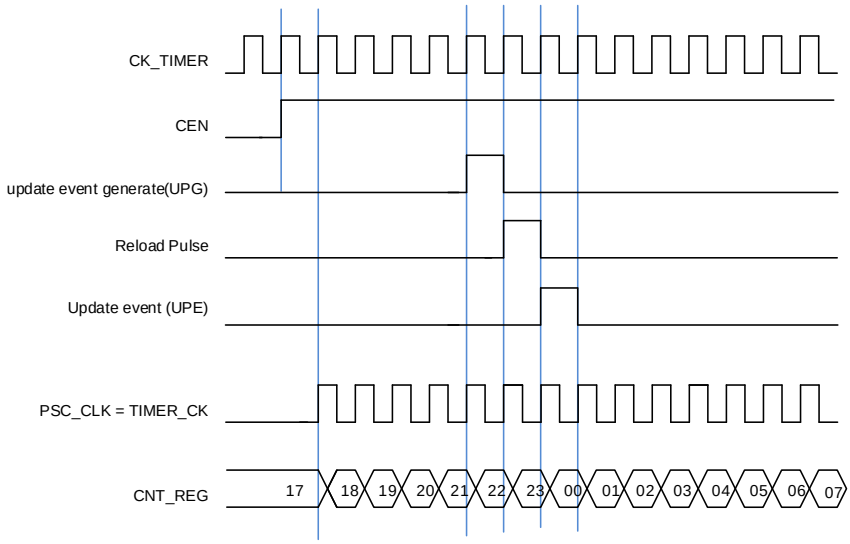

- TSCFG6[4:0] are setting to a nonzero value (external clock mode 0). External input pin is selected as timer clock source.

The TIMER_CK, which drives counter's prescaler to count, can be triggered by the event of rising or falling edge on the external pin TIMERx_CH0/TIMERx_CH1. This mode can be selected by setting TSCFG6[4:0] to 0x5~0x7.

And, the counter prescaler can also be driven by rising edge on the internal trigger input pin ITI0~ITI14. This mode can be selected by setting TSCFG6[4:0] to 0x1~0x4, 0x9~0x14.

- SMC1= 1'b1 (external clock mode 1). External input ETI is selected as timer clock source.

The TIMER_CK, which drives counter's prescaler to count, can be triggered by the event of rising or falling edge on the external pin ETI. This mode can be selected by setting the SMC1 bit in the TIMERx_SMCFG register to 1. The other way to select the ETI signal as the clock source is setting the TSCFG6[4:0] to 0x8. Note that the ETI signal is derived from the ETI pin sampled by a digital filter. When the ETI signal is selected as the clock source, the trigger controller including the edge detection circuitry will generate a clock pulse on each ETI signal rising edge to clock the counter prescaler.

Note: The ETI signal can be input from an external ETI pin or provide by on-chip peripherals, please refer to ***Trigger selection for TIMER1_ETI register (TRIGSEL_TIMER1ETI)*** for more details.

Clock prescaler

The prescaler can divide the timer clock (TIMER_CK) to a counter clock (PSC_CLK) by any factor ranging from 1 to 65536. It is controlled by prescaler register (TIMERx_PSC) which can be changed ongoing, but it is adopted at the next update event.

Figure 24-52. Counter timing diagram with prescaler division change from 1 to 2

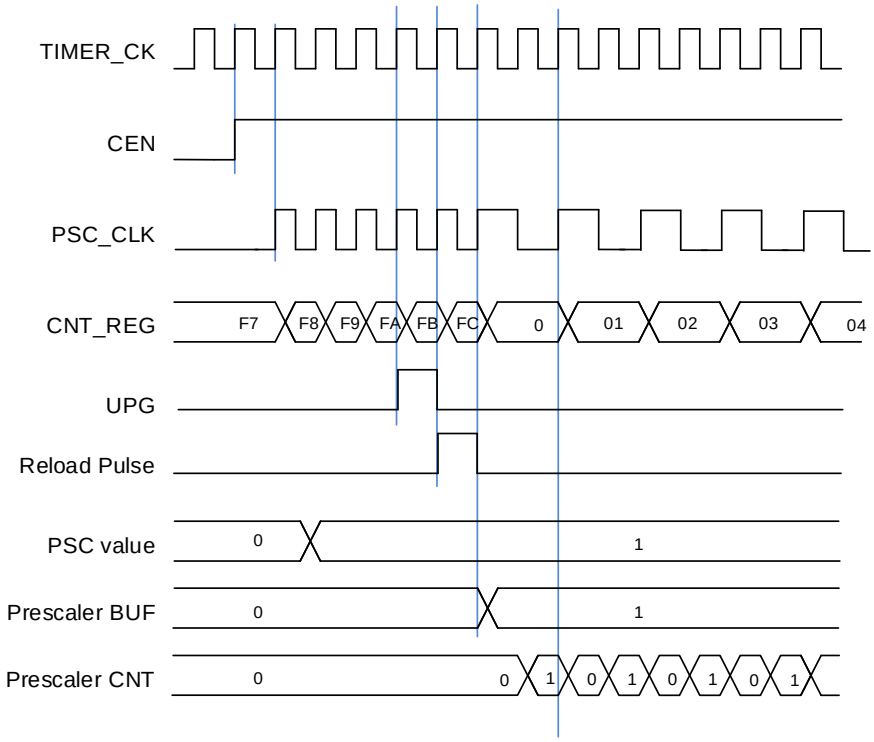

Up counting mode

In this mode, the counter counts up continuously from 0 to the counter reload value, which is defined in the TIMERx_CAR register, in a count-up direction. Once the counter reaches the counter reload value, the counter restarts from 0. The update event is generated each time when counter overflows. The counting direction bit DIR in the TIMERx_CTL0 register should be set to 0 for the up counting mode.

Whenever, if the update event software trigger is enabled by setting the UPG bit in the TIMERx_SWEVG register, the counter value will be initialized to 0 and an update event will be generated.

If the UPDIS bit in TIMERx_CTL0 register is set, the update event is disabled.

When an update event occurs, all the registers (auto reload register, prescaler register) are updated.

Figure 24-53. Timing chart of up counting mode, PSC=0/2 and ***Figure 24-54. Timing chart of up counting, change TIMERx_CAR ongoing*** show some examples of the counter behavior for different clock prescaler factor when TIMERx_CAR=0x99.

Figure 24-53. Timing chart of up counting mode, PSC=0/2

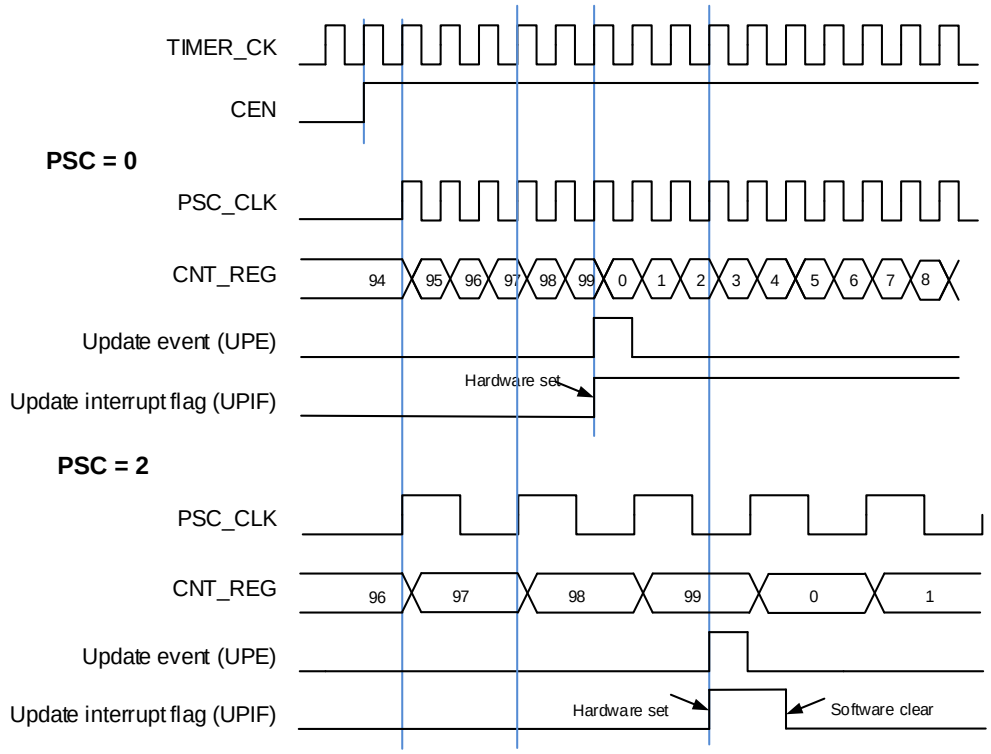

Figure 24-54. Timing chart of up counting, change TIMERx_CAR ongoing

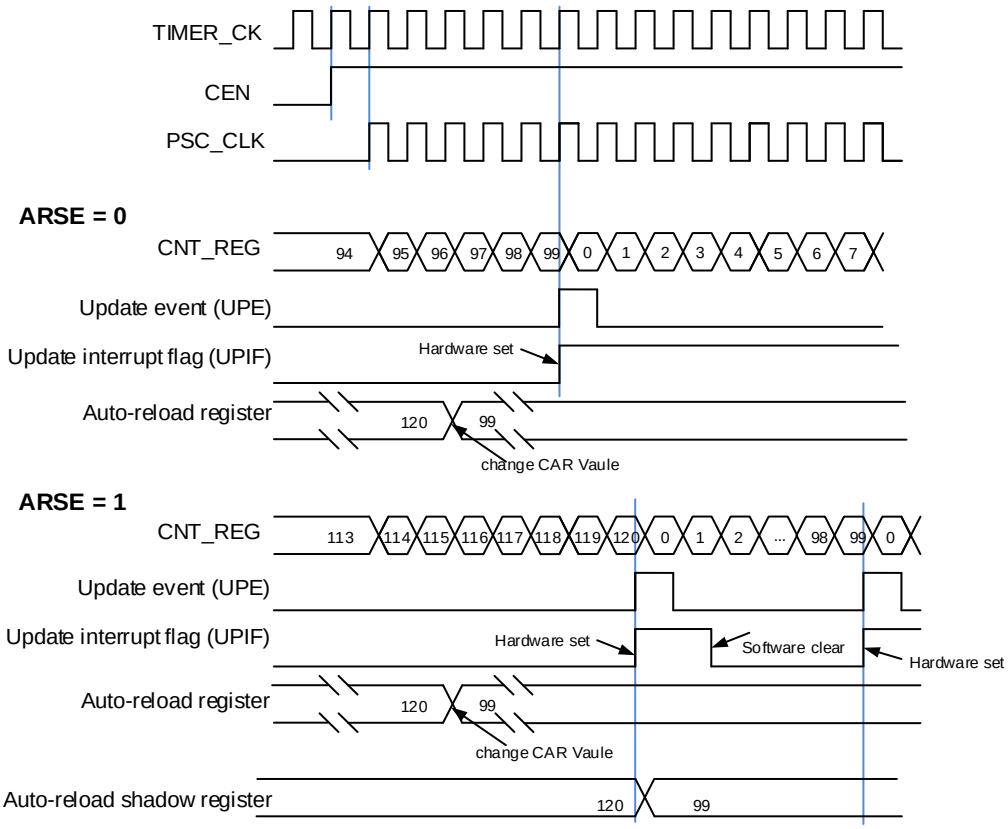

Down counting mode

In this mode, the counter counts down continuously from the counter reload value, which is defined in the TIMERx_CAR register, in a count-down direction. Once the counter reaches 0, the counter restarts to count again from the counter reload value. The counting direction bit DIR in the TIMERx_CTL0 register should be set to 1 for the down counting mode.

When the update event is set by the UPG bit in the TIMERx_SWEVG register, the counter value will be initialized to the counter reload value and an update event will be generated.

If the UPDIS bit in TIMERx_CTL0 register is set, the update event is disabled.

When an update event occurs, all the registers (auto reload register, prescaler register) are updated.

Figure 24-55. Timing chart of down counting mode, PSC=0/2 and *Figure 24-56. Timing chart of down counting mode, change TIMERx_CAR ongoing* show some examples of the counter behavior for different clock frequencies when TIMERx_CAR = 0x99.

Figure 24-55. Timing chart of down counting mode, PSC=0/2

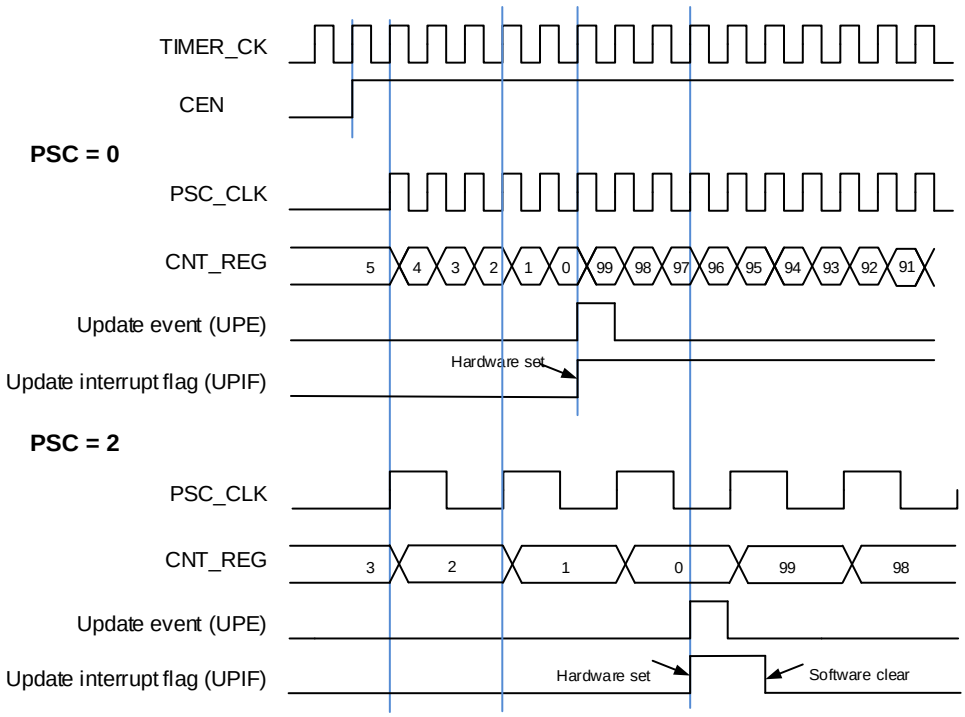

Figure 24-56. Timing chart of down counting mode, change TIMERx_CAR ongoing

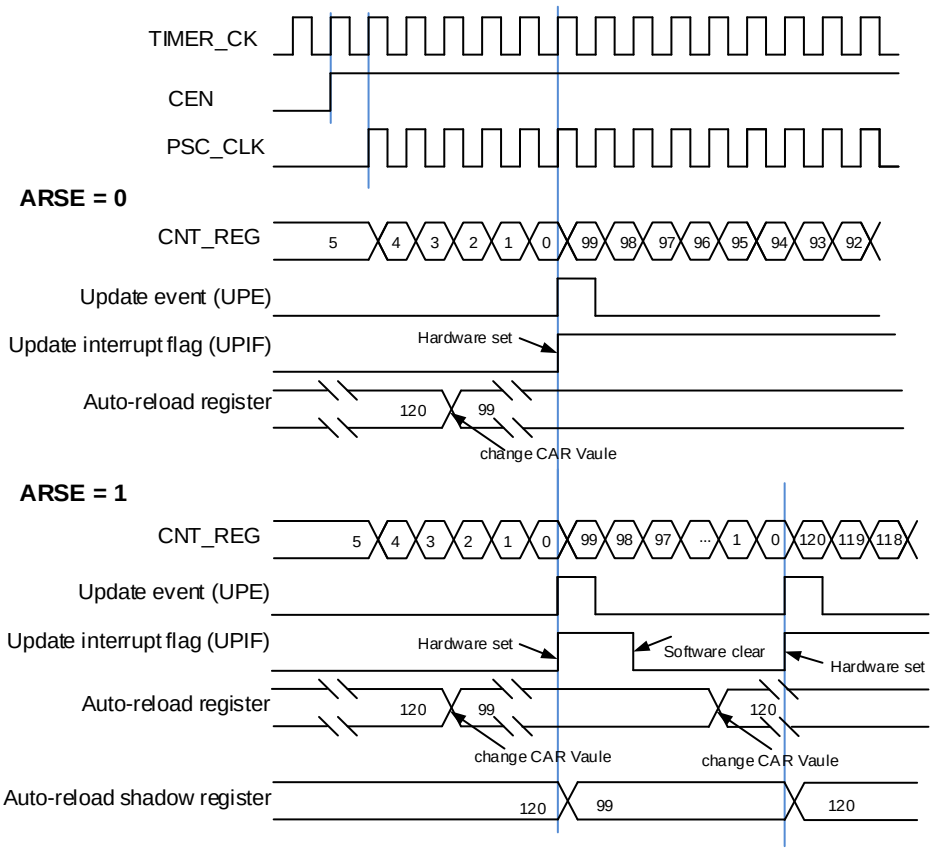

Center-aligned counting mode

In the center-aligned counting mode, the counter counts up from 0 to the counter reload value and then counts down to 0 alternatively. The timer module generates an overflow event when the counter counts to (TIMERx_CAR-1) in the count-up direction and generates an underflow event when the counter counts to 1 in the count-down direction. The counting direction bit DIR in the TIMERx_CTL0 register is read-only and indicates the counting direction when in the center-aligned counting mode. The counting direction is updated by hardware automatically.

Setting the UPG bit in the TIMERx_SWEVG register will initialize the counter value to 0 and generate an update event irrespective of whether the counter is counting up or down in the center-aligned counting mode.

The UPIF bit in the TIMERx_INTF register will be set to 1 either when an underflow event or an overflow event occurs. While the CHxIF bit is associated with the value of CAM in TIMERx_CTL0. The details refer to ***Figure 24-57. Timing chart of center-aligned counting mode***.

If the UPDIS bit in the TIMERx_CTL0 register is set, the update event is disabled.

When an update event occurs, all the registers (auto-reload register, prescaler register) are

updated. ***Figure 24-57. Timing chart of center-aligned counting mode*** shows the example of the counter behavior when TIMERx_CAR=0x99, TIMERx_PSC=0x0.

Figure 24-57. Timing chart of center-aligned counting mode

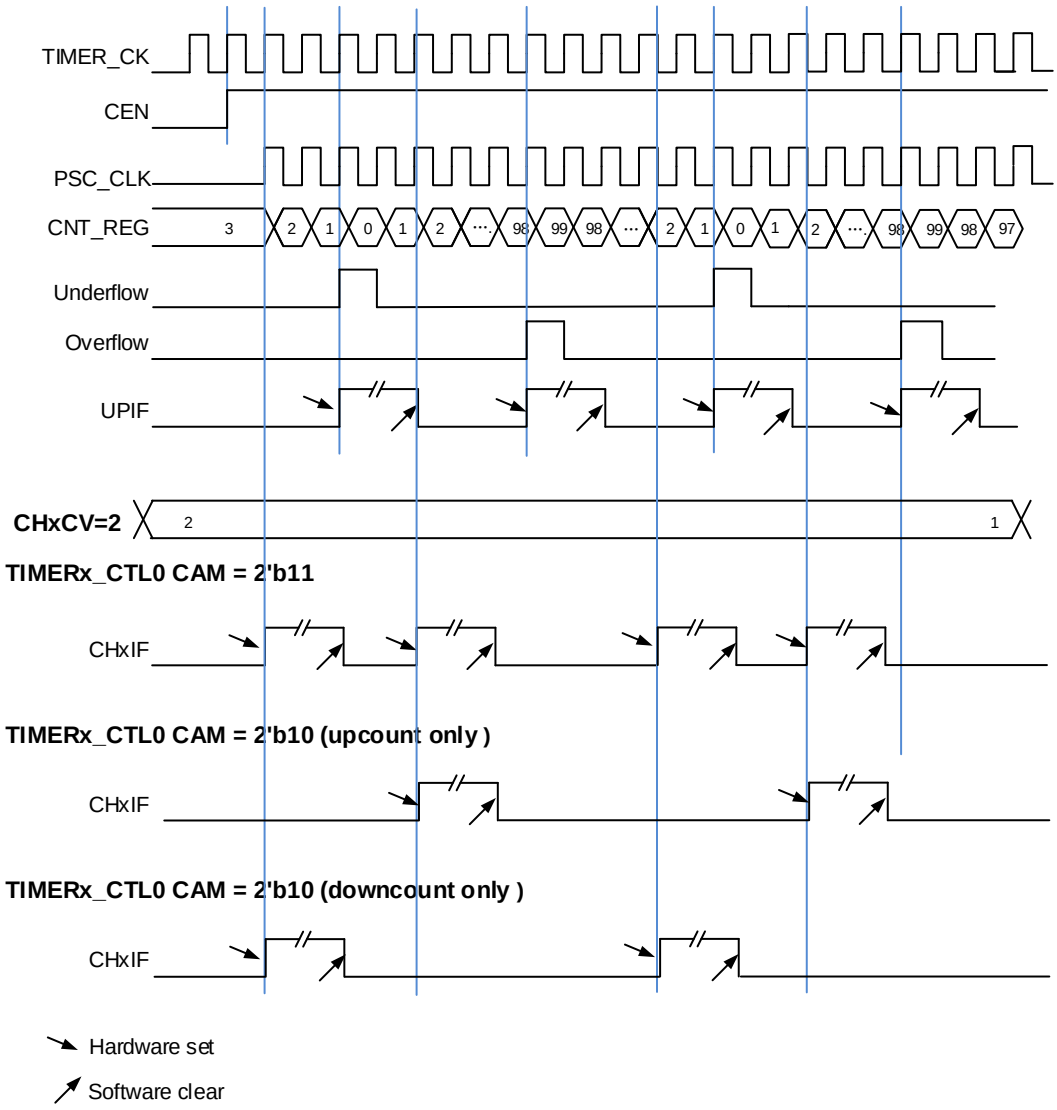

Capture/compare channels

The general level0 timer has four independent channels which can be used as capture inputs or compare match outputs. Each channel is built around a channel capture compare register including an input stage, channel controller and an output stage.

■ Input capture mode

Input capture mode allows the channel to perform measurements such as pulse timing, frequency, period, duty cycle and so on. The input stage consists of a digital filter, a channel polarity selection, edge detection and a channel prescaler. When a selected edge occurs on the channel input, the current value of the counter is captured into the TIMERx_CHxCV register, at the same time the CHxIF bit is set and the channel interrupt is generated if it is

enabled when CHxIE=1.

Figure 24-58. Input capture logic

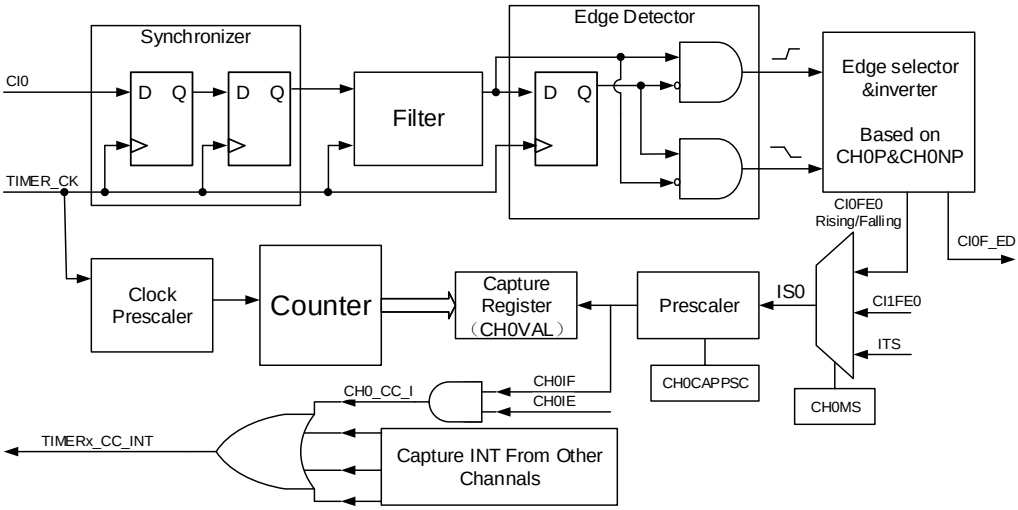

The input signals of channelx (CIx) can be the TIMERx_CHx signal or the XOR signal of the TIMERx_CH0, TIMERx_CH1 and TIMERx_CH2 signals (just for CI0). First, the input signal of channel (CIx) is synchronized to TIMER_CK signal, and then sampled by a digital filter to generate a filtered input signal. Then through the edge detector, the rising or falling edge is detected by configuring CHxP bit. The input capture signal can also be selected from the input signal of other channel or the internal trigger signal by configuring CHxMS bits. The IC prescaler makes several input events generate one effective capture event. On the capture event, TIMERx_CHxCV will store the value of counter.

So, the process can be divided into several steps as below:

Step1: Filter configuration (CHxCAPFLT in TIMERx_CHCTL0).
Based on the input signal and quality of requested signal, configure compatible CHxCAPFLT.

Step2: Edge selection (CHxP and CHxNP bits in TIMERx_CHCTL2).
Rising edge or falling edge, choose one by configuring CHxP and CHxNP bits.

Step3: Capture source selection (CHxMS in TIMERx_CHCTL0)
As soon as selecting one input capture source by CHxMS, the channel must be set to input mode (CHxMS! =0x0) and TIMERx_CHxCV cannot be written any more.

Step4: Interrupt enable (CHxIE and CHxDEN in TIMERx_DMAINTEN)
Enable the related interrupt to get the interrupt and DMA request.

Step5: Capture enable (CHxEN in TIMERx_CHCTL2)

Result: When the wanted input signal is captured, TIMERx_CHxCV will be set by counter's value and CHxIF is asserted. If the CHxIF is 1, the CHxOF will also be asserted. The interrupt and DMA request will be asserted or not based on the configuration of CHxIE and CHxDEN in TIMERx_DMAINTEN.

Direct generation: A DMA request or interrupt is generated by setting CHxG directly.

The input capture mode can be also used for pulse width measurement from signals on the TIMERx_CHx pins. For example, PWM signal connects to CI0 input. Select CI0 as channel 0 capture signals by setting CH0MS to 3'b001 in the channel control register (TIMERx_CHCTL0) and set capture on rising edge. Select CI0 as channel 1 capture signal by setting CH1MS to 3'b010 in the channel control register (TIMERx_CHCTL0) and set capture on falling edge. The counter is set to restart mode and is restarted on channel 0 rising edge. Then the TIMERX_CH0CV can measure the PWM period and the TIMERx_CH1CV can measure the PWM duty cycle.

- **Output compare mode**

Figure 24-59. Output compare logic (x=0,1,2,3)

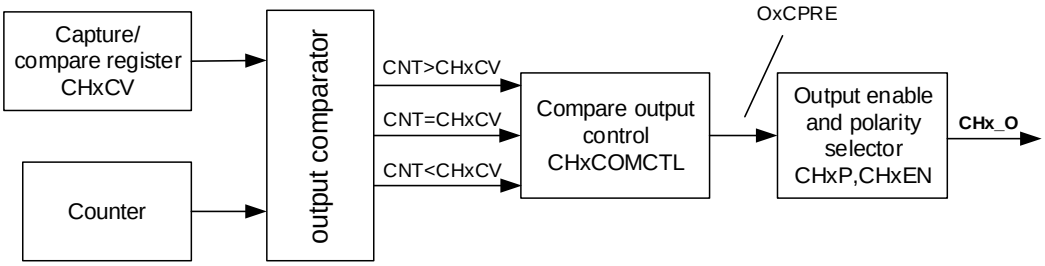

Figure 24-59. Output compare logic (x=0,1,2,3) shows the logic circuit of output compare mode. The relationship between the channel output signal CHx_O and the OxCPRE signal (more details refer to *Channel output prepare signal*) is described as blew: The active level of O0CPRE is high, the output level of CH0_O depends on OxCPRE signal, CHxP bit and CH0P bit (please refer to the TIMERx_CHCTL2 register for more details).For example, configure CHxP=0 (the active level of CHx_O is high, the same as OxCPRE), CHxEN=1 (the output of CHx_O is enabled),

If the output of OxCPRE is active(high) level, the output of CHx_O is active(high) level;

If the output of OxCPRE is inactive(low) level, the output of CHx_O is active(low) level.

In output compare mode, the TIMERx can generate timed pulses with programmable position, polarity, duration and frequency. When the counter matches the value in the TIMERx_CHxCV register of an output compare channel, the channel (n) output can be set, cleared, or toggled based on CHxCOMCTL. When the counter reaches the value in the TIMERx_CHxCV register, the CHxIF bit will be set and the channel (n) interrupt is generated if CHxIE = 1. And the DMA request will be asserted, if CHxDEN=1.

So, the process can be divided into several steps as below:

Step1: Clock configuration. Such as clock source, clock prescaler and so on.

Step2: Compare mode configuration.

- Set the shadow enable mode by CHxCOMSEN.
- Set the output mode (set/clear/toggle) by CHxCOMCTL.
- Select the active polarity by CHxP.
- Enable the output by CHxEN.

Step3: Interrupt/DMA-request enables configuration by CHxIE/CHxDEN.

Step4: Compare output timing configuration by TIMERx_CAR and TIMERx_CHxCV.

The TIMERx_CHxCV can be changed onging to meet the expected waveform.

Step5: Start the counter by configuring CEN to 1.

Figure 24-60. Output-compare under three modes shows the three compare modes toggle/set/clear. CAR=0x63, CHxVAL=0x3

Figure 24-60. Output-compare under three modes

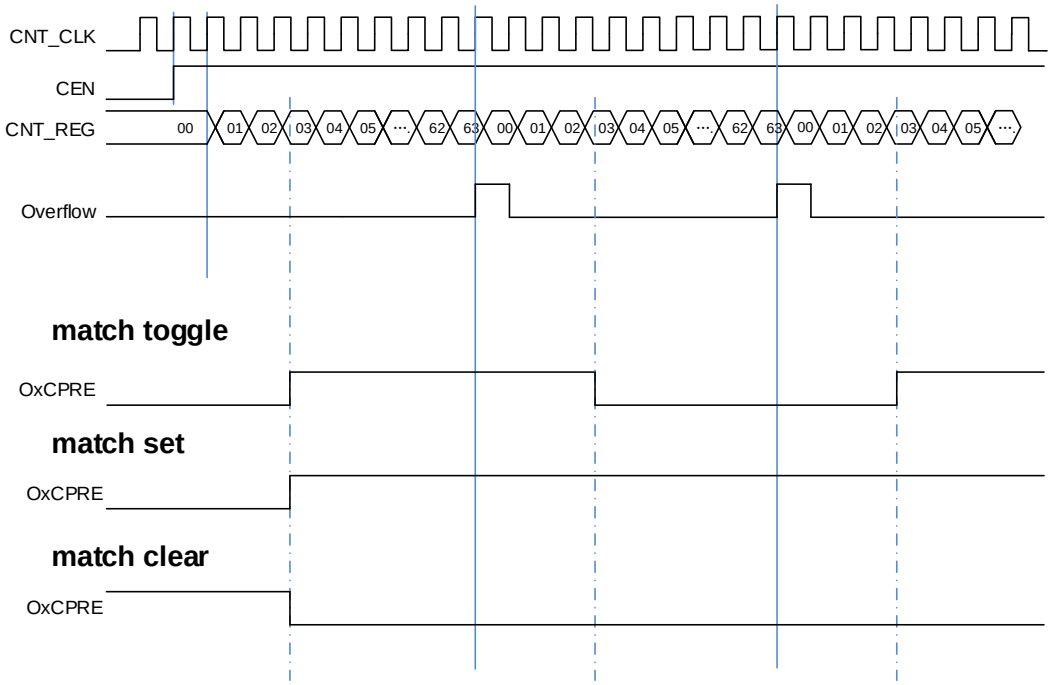

PWM mode

In the PWM output mode (by setting the CHxCOMCTL bit to 4'b0110 (PWM mode 0) or to 4'b0111 (PWM mode 1)), the channel can generate PWM waveform according to the TIMERx_CAR registers and TIMERx_CHxCV registers.

Based on the counter mode, PWM can also be divided into EAPWM (Edge-aligned PWM) and CAPWM (Center-aligned PWM).

The EAPWM's period is determined by TIMERx_CAR and the duty cycle is determined by TIMERx_CHxCV. ***Figure 24-61. Timing chart of EAPWM*** shows the EAPWM output and interrupts waveform.

The CAPWM period is determined by 2*TIMERx_CAR, and duty cycle is determined by 2*TIMERx_CHxCV. ***Figure 24-62. Timing chart of CAPWM*** shows the CAPWM output and interrupts waveform.

In up counting mode, if the value of TIMERx_CHxCV is greater than the value of TIMERx_CAR, the output will be always active in PWM mode 0 (CHxCOMCTL=4'b0110). And if the value of TIMERx_CHxCV is greater than the value of TIMERx_CAR, the output will

be always inactive in PWM mode 1 (CHxCOMCTL=4'b0111).

Figure 24-61. Timing chart of EAPWM

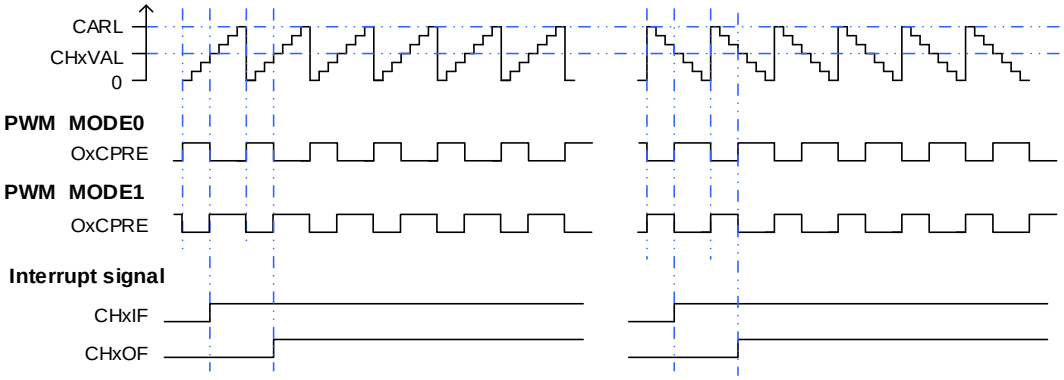

Figure 24-62. Timing chart of CAPWM

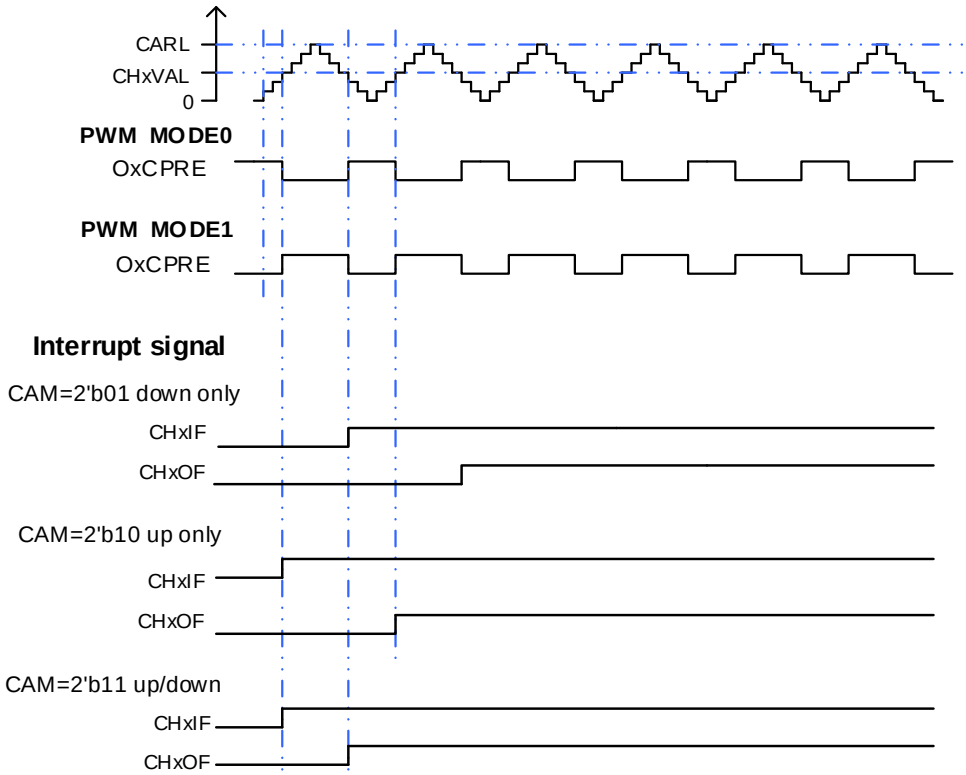

Composite PWM mode

In the Composite PWM mode (CHxCPWMEN = 1'b1, CHxMS[2:0] = 3'b000 and CHxCOMCTL = 4'b0110 or 4'b0111), the PWM signal output in channel x (x=0..3) is composited by CHxVAL and CHxCOMVAL_ADD bits.

If CHxCOMCTL = 4'b0110 (PWM mode 0) and DIR = 1'b0 (up counting mode), or CHxCOMCTL = 4'b0111 (PWM mode 1) and DIR = 1'b1 (Down counting mode), the channel x output is forced low when the counter matches the value of CHxVAL. It is forced high when the counter matches the value of CHxCOMVAL_ADD.

If CHxCOMCTL = 4'b0111 (PWM mode 1) and DIR = 1'b0 (up counting mode), or CHxCOMCTL = 4'b0110 (PWM mode 0) and DIR = 1'b1 (down counting mode) the channel x output is forced high when the counter matches the value of CHxVAL. It is forced low when the counter matches the value of CHxCOMVAL_ADD.

The PWM period is determined by (CARL + 0x0001) and the PWM pulse width is determined by the following table.

Table 24-10.The Composite PWM pulse width

Condition	Mode	PWM pulse width
CHxVAL < CHxCOMVAL_ADD ≤ CARL	PWM mode 0	(CARL + 0x0001) + (CHxVAL – CHxCOMVAL_ADD)
	PWM mode 1	(CHxCOMVAL_ADD – CHxVAL)
CHxCOMVAL_ADD < CHxVAL ≤ CARL	PWM mode 0	(CHxVAL - CHxCOMVAL_ADD)
	PWM mode 1	(CARL + 0x0001) + (CHxCOMVAL_ADD – CHxVAL)
(CHxVAL = CHxCOMVAL_ADD ≤ CARL) or (CHxVAL > CARL > CHxCOMVAL_ADD)	PWM mode 0 (up counting) or PWM mode 1 (down counting)	100%
	PWM mode 0 (down counting) or PWM mode 1 (up counting)	0%
CHxCOMVAL_ADD > CARL > CHxVAL	PWM mode 0(up counting) or PWM mode 1(down counting)	0%
	PWM mode 0(down counting) or PWM mode 1(up counting)	100%
(CHxVAL>CARL) and (CHxCOMVAL_ADD > CARL)	-	The output of CHx_O is keeping

When the counter reaches the value of CHxVAL, the CHxIF bit is set and the channel x interrupt is generated if CHxIE = 1, and the DMA request will be asserted, if CHxDEN=1. When the counter reaches the value of CHxCOMVAL_ADD, the CHxCOMADDIF bit is set (this flag just used in composite PWM mode, when CHxCPWMEN=1) and the channel x additional compare interrupt is generated if CHxCOMADDIE = 1 (Only interrupt is generated, no DMA request is generated).

According to the relationship among CHxVAL, CHxCOMVAL_ADD and CARL, it can be divided into four situations:

5) CHxVAL < CHxCOMVAL_ADD, and the values of CHxVAL and CHxCOMVAL_ADD

between 0 and CARL.

Figure 24-63. Channel x output PWM with (CHxVAL < CHxCOMVAL_ADD)

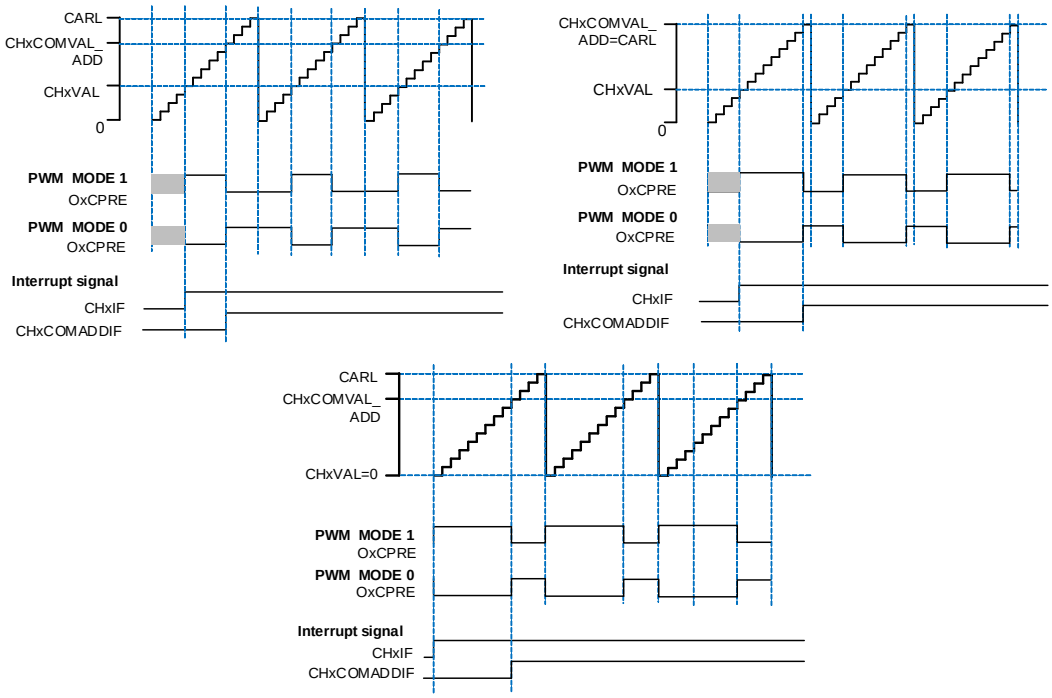

6) CHxVAL = CHxCOMVAL_ADD, and the value of CHxVAL and CHxCOMVAL_ADD between 0 and CARL.

Figure 24-64. Channel x output PWM with (CHxVAL = CHxCOMVAL_ADD)

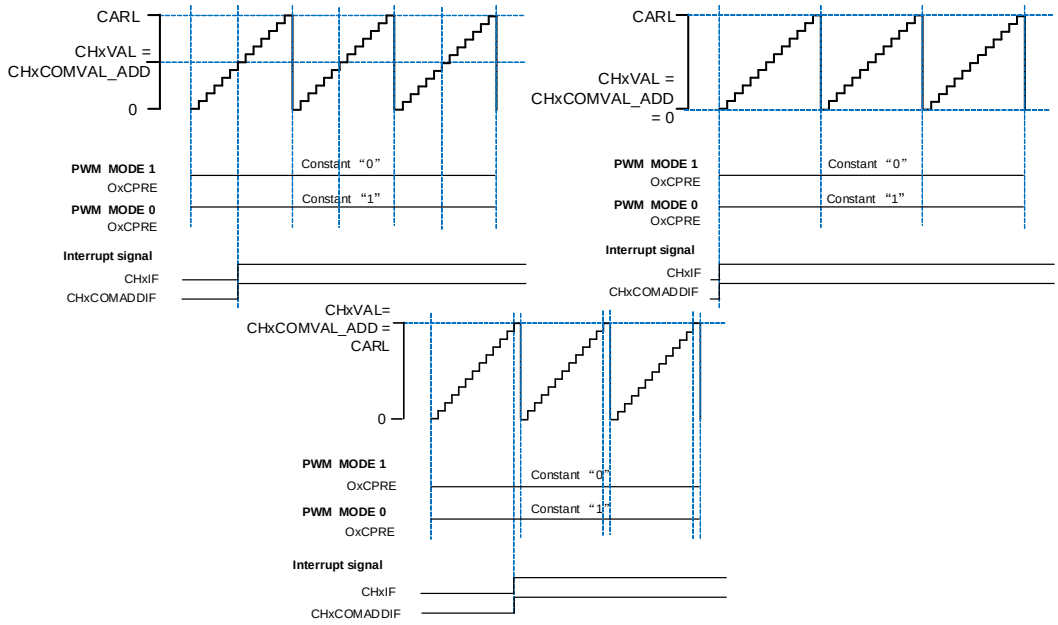

7) CHxVAL > CHxCOMVAL_ADD, and the value of CHxVAL and CHxCOMVAL_ADD between 0 and CARL.

Figure 24-65. Channel x output PWM with (CHxVAL > CHxCOMVAL_ADD)

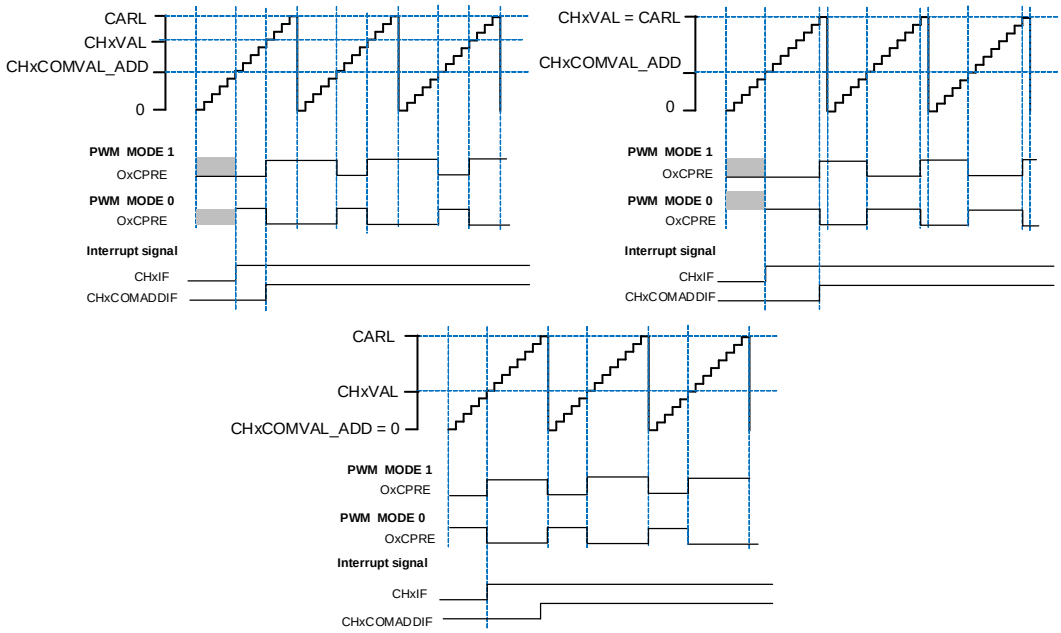

8) One of the value of CHxVAL and CHxCOMVAL_ADD exceeds CARL.

Figure 24-66. Channel x output PWM with CHxVAL or CHxCOMVAL_ADD exceeds CARL

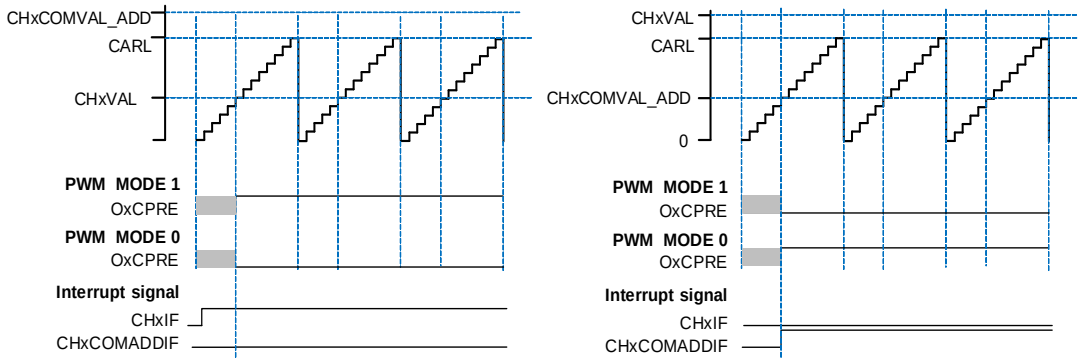

The composite PWM mode is intended to support the generation of PWM signals where the period is not modified while the signal is being generated, but the duty cycle will be varied. *Figure 24-67. Channel x output PWM duty cycle changing with CHxCOMVAL_ADD* shows the PWM output and interrupts waveform.

In some cases, the CHxCOMVAL_ADD match can happen on the next counter period (the value of CHxCOMVAL_ADD was written after the counter reaches the value of CHxVAL, and the value of CHxCOMVAL_ADD was less than or equal to the CHxVAL).

Figure 24-67. Channel x output PWM duty cycle changing with CHxCOMVAL_ADD

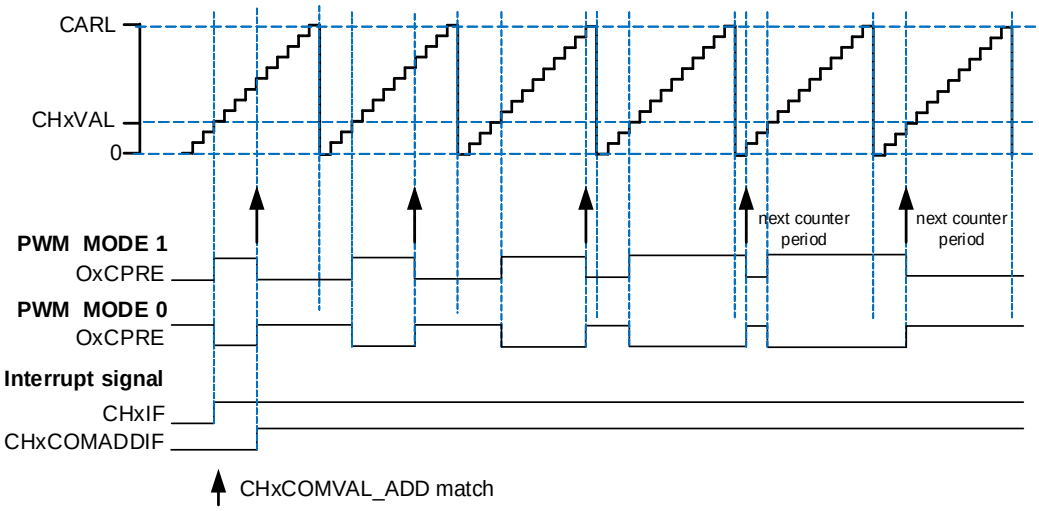

If more than one channels are configured in composite PWM mode, it is possible to fix an offset for the channel x match edge of each pair with respect to other channels. This behavior is useful in the generation of lighting PWM control signals where it is desirable that edges are not coincident with each other pair to help eliminate noise generation. The CHxVAL register value is the shift of the PWM pulse with respect to the beginning of counter period.

Figure 24-68. Four Channels outputs in Composite PWM mode

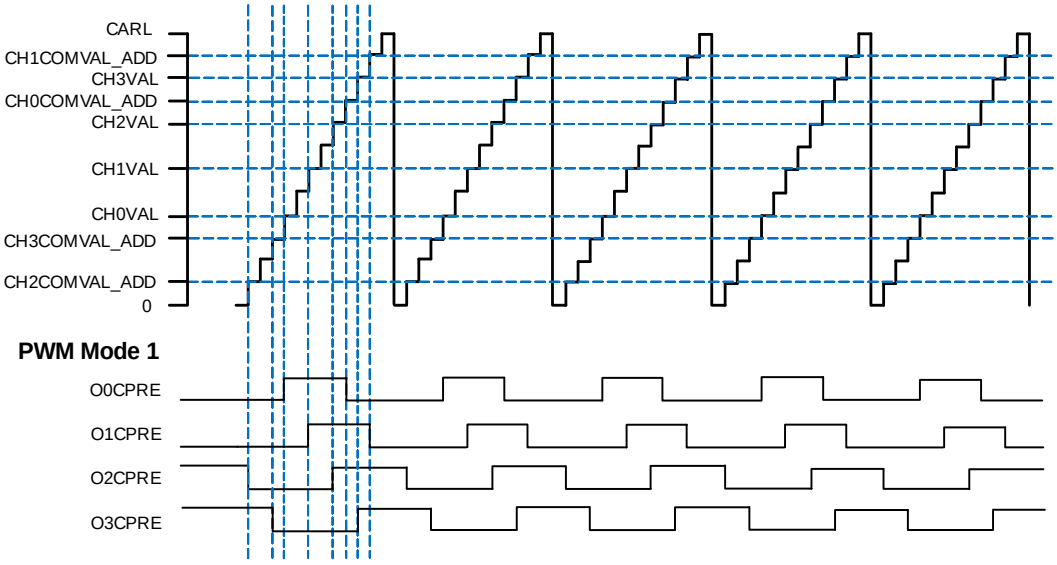

Output match pulse select

Basing on that CHx_O(x=0..3) outputs are configured by CHxCOMCTL[3:0](x=0..3) bits when the match events occur, the output signal is configured by CHxOMPSEL[1:0](x=0..3) bit to be normal or a pulse.

When the match events occur, the CHxOMPSEL[1:0](x=0..3) bits are used to select the output of OxCPRE which drives CHx_O:

- CHxOMPSEL = 2'b00, the OxCPRE signal is output normally with the configuration of CHxCOMCTL[3:0] bits;
- CHxOMPSEL = 2'b01, only the counter is counting up, the OxCPRE signal is output a pulse when the match events occur, and the pulse width is one CK_TIMER clock cycle.
- CHxOMPSEL = 2'b10, only the counter is counting down, the OxCPRE signal is output a pulse when the match events occur, and the pulse width is one CK_TIMER clock cycle.
- CHxOMPSEL = 2'b11, both the counter is counting up and counting down, the OxCPRE signal is output a pulse when the match events occur, and the pulse width is one CK_TIMER clock cycle.

Figure 24-69. CHx_O output with a pulse in edge-aligned mode (CHxOMPSEL≠2'b00)

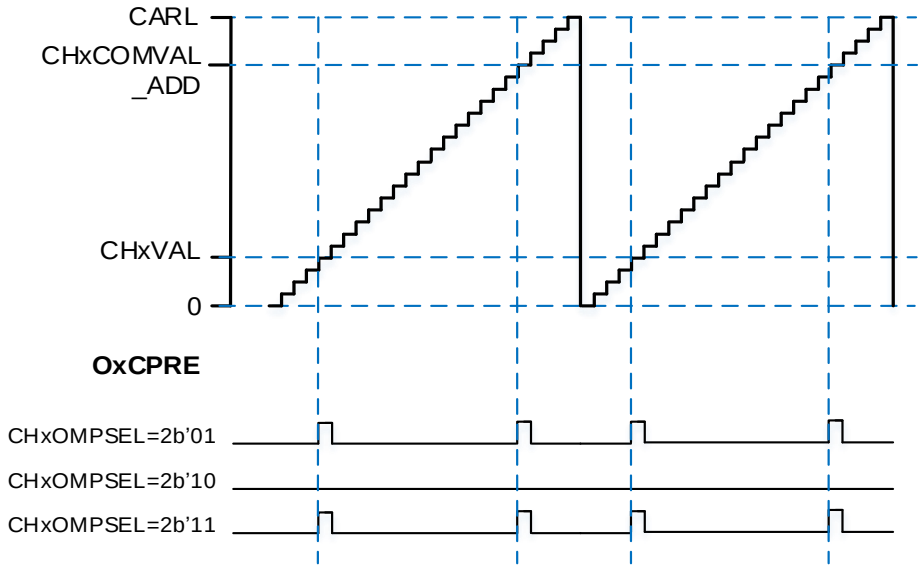

Figure 24-70. CHx_O output with a pulse in center-aligned mode (CHxOMPSEL≠2'b00)

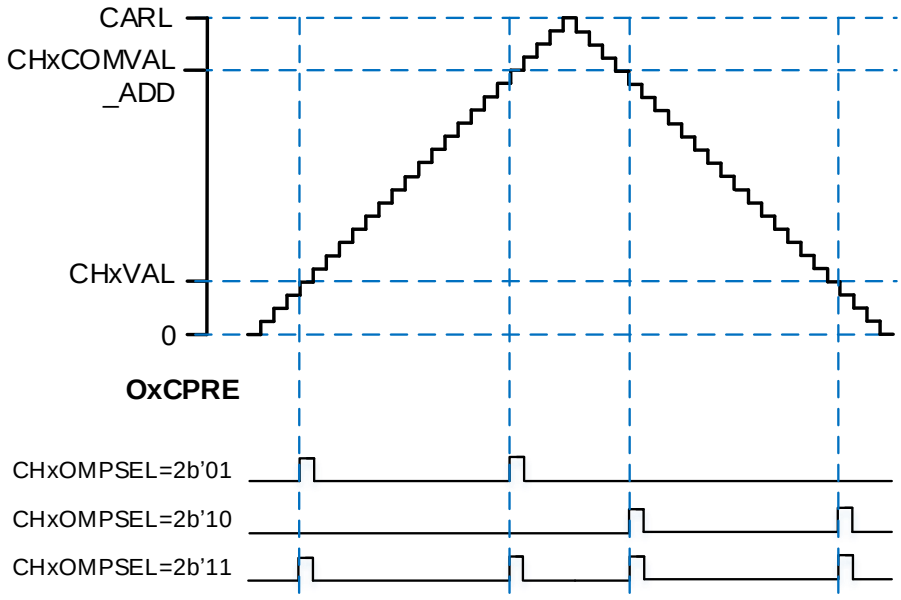

Channel output prepare signal

As is shown in ***Figure 24-59. Output compare logic (x=0,1,2,3)***, when TIMERx is configured in compare match output mode, a middle signal which is OxCPRE signal (Channel x output prepare signal) will be generated before the channel outputs signal. The OxCPRE signal type is defined by configuring the CHxCOMCTL bit.

The OxCPRE signal has several types of output function. The OxCPRE signal type is defined by configuring the CHxCOMCTL bit. These include keeping the original level by configuring the CHxCOMCTL field to 0x00, setting to high by configuring the CHxCOMCTL field to 0x01, setting to low by configuring the CHxCOMCTL field to 0x02 or toggling signal by configuring the CHxCOMCTL field to 0x03 when the counter value matches the content of the TIMERx_CHxCV register.

The PWM mode 0/PWM mode 1 output is another output type of OxCPRE which is setup by configuring the CHxCOMCTL field to 0x06/0x07. In these modes, the OxCPRE signal level is changed according to the counting direction and the relationship between the counter value and the TIMERx_CHxCV content. Refer to the definition of relative bit for more details.

Another special function of the OxCPRE signal is a forced output which can be achieved by configuring the CHxCOMCTL field to 0x04/0x05. The output can be forced to an inactive/active level irrespective of the comparison condition between the values of the counter and the TIMERx_CHxCV.

Configure the CHxCOMCEN bit to 1 in the TIMERx_CHCTL0 register, the OxCPRE signal can be forced to 0 when the ETIFP signal derived from the external ETI pin is set to a high level. The OxCPRE signal will not return to its active level until the next update event occurs.

Quadrature decoder

The quadrature decoder function uses two quadrature inputs CI0 and CI1 derived from the TIMERx_CH0 and TIMERx_CH1 pins respectively to interact with each other to generate the counter value.

Setting TSCFGy[4:0](y=0..2) != 5'b00000 to select that the counting direction of timer is determined only by the CI0, only by the CI1, or by the CI0 and the CI1. The DIR bit is modified by hardware automatically during the voltage level change of each direction selection source. The mechanism of changing the counter direction is shown in ***Table 24-11. Counting direction in different quadrature decoder signals***. The CI0FE0 and CI1FE1 are the signals of the CI0 and CI1 after the filtering and polarity selection. The quadrature decoder can be regarded as an external clock with a direction selection. This means that the counter counts continuously from 0 to the counter-reload value. Therefore, users must configure the TIMERx_CAR register before the counter starts to count.

Table 24-11. Counting direction in different quadrature decoder signals

Counting mode	Level	CI0FE0		CI1FE1	
		Rising	Falling	Rising	Falling
Quadrature decoder mode 0 TSCFG0[4:0]!= 5'b00000	CI1FE1=1	Down	Up	-	-
	CI1FE1=0	Up	Down	-	-
Quadrature decoder mode 1 TSCFG1[4:0]!= 5'b00000	CI0FE0=1	-	-	Up	Down
	CI0FE0=0	-	-	Down	Up
Quadrature decoder mode 2 TSCFG2[4:0]!= 5'b00000	CI1FE1=1	Down	Up	X	X
	CI1FE1=0	Up	Down	X	X
	CI0FE0=1	X	X	Up	Down
	CI0FE0=0	X	X	Down	Up

Note: "-" means "no counting"; "X" means impossible. "0" means "low level", "1" means "high level".

Figure 24-71. Example of counter operation in decoder interface mode

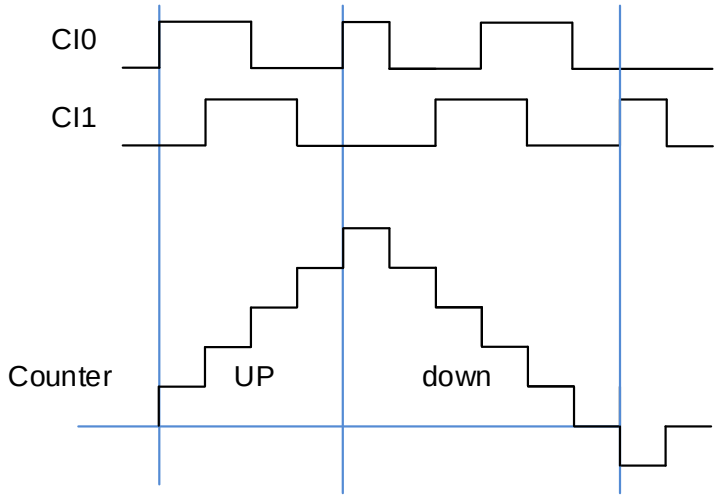

Figure 24-72. Example of decoder interface mode with CI0FE0 polarity inverted

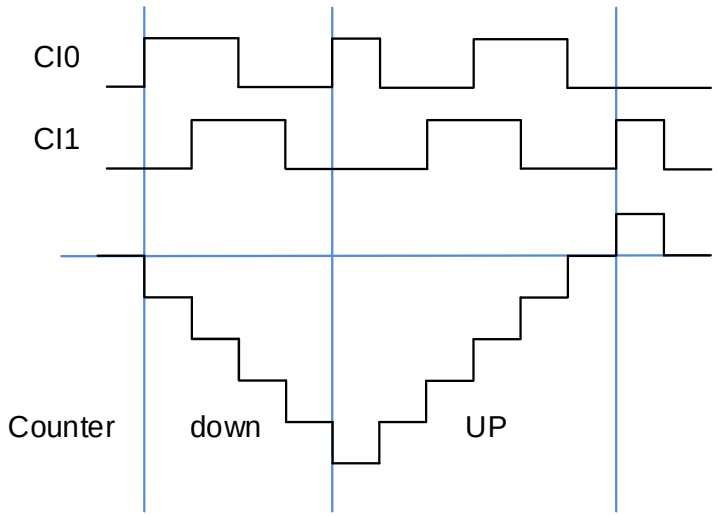

Quadrature decoder signal disconnection detection

The quadrature decoder signal jump detection function can be enabled by setting the

DECJDEN bit (in TIMERx_CTL2register) to 1, which can be used to detect whether the level jump edges (rising or falling) of the CI0 and CI1 signals occur at the same time.

When DECJDEN =1, if the level transitions of the two quadrature signals CI0 and CI1 occur simultaneously, the interrupt flag DECJIF is set, if DECJIE=1, the corresponding interrupt is generated.

The quadrature decoder signal disconnection detection function can be enabled by setting the DECDISDEN bit (in TIMERx_CTL2 register) to 1, which can be used to detect the signal conditions of the CI0 and CI1 signals.

As shown in ***Figure 24-73. Quadrature decoder signal disconnection detection block diagram***. The signal detection module includes two 32-bit watchdog counters and a period register. The CI0 and CI1 signals are used to reset the two watchdog counters respectively.

When DECDISDEN=1, two watchdog counters start counting up at the same time. If the counter continues to count to the watchdog period value (this value is determined by the WDGPER[31:0] bit-field in the TIMERx_WDGPER register), the counter is timeout and the interrupt flag DECDISIF is set. If DECDISIE=1, the corresponding interrupt is generated.

Figure 24-73. Quadrature decoder signal disconnection detection block diagram

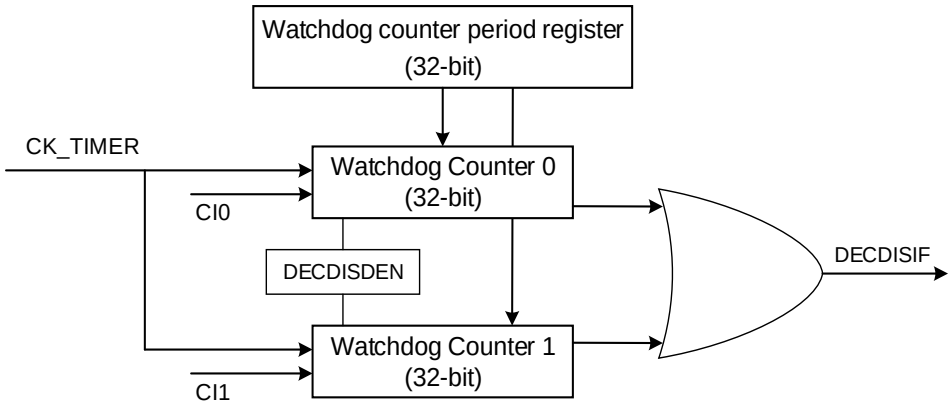

Non-quadrature decoder

The non-quadrature decoder function has two modes: non-quadrature decoder mode 0 and non-quadrature decoder mode 1, which can be selected by setting TSCFGy[4:0](y=8, 9) != 5'b00000. There are two input sources in these two modes: CI0 and CI1.

When the non-quadrature decoder mode 0 is enabled, the CI0 signal is used as the count pulse and CI1 is used as the count selection signal. When CH1P=0, the counter will count up on the rising edge of the CI0 input signal merely in the case that the CI1 signal is high; When CH1P=1, the counter will count up on the rising edge of the CI0 input signal merely in the case that the CI1 signal is low. The more details is shown in ***Figure 24-74. Example of counter operation in non-quadrature decoder mode 0 with CH1P=0***.

Figure 24-74. Example of counter operation in non-quadrature decoder mode 0 with

CH1P=0

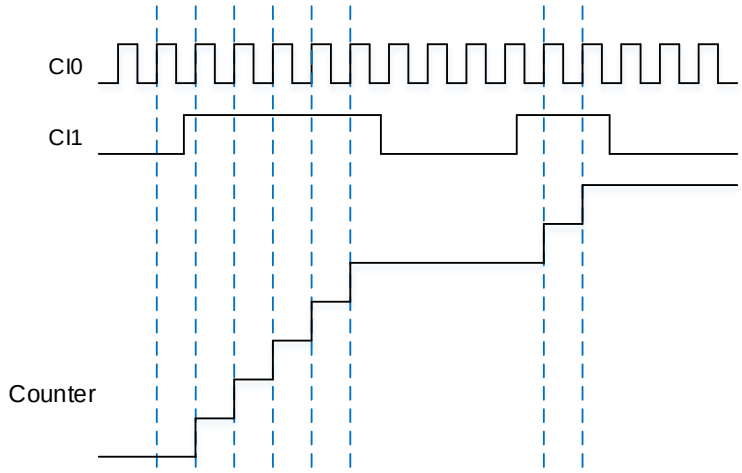

When the non-quadrature decoder mode 1 is enabled, the CI0 signal is used as the count pulse (with the CH0P is used to select the counter edge) and the CI1 signal is used as the count direction selection. The more details is shown in ***Table 24-12. the counter operation in in non-quadrature decoder mode 1*** and ***Figure 24-75. Example of counter operation in non-quadrature decoder mode 1 with CH0P=0***.

Table 24-12. the counter operation in in non-quadrature decoder mode 1

CH0P	level	counter operation
0	CI1 is high	the counter will count up on the rising edge of the CI0 input signal
	CI1 is low	the counter will count down on the rising edge of the CI0 input signal
1	CI1 is high	the counter will count up on the falling edge of the CI0 input signal
	CI1 is low	the counter will count down on the falling edge of the CI0 input signal

Figure 24-75. Example of counter operation in non-quadrature decoder mode 1 with CH0P=0

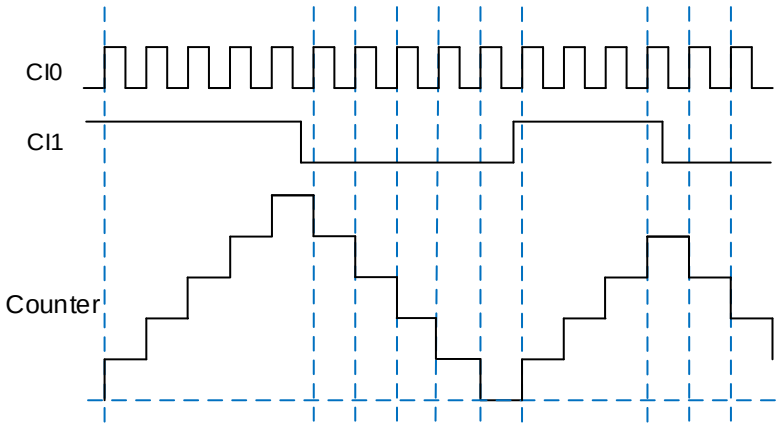

Hall sensor function

Refer to ***Advanced timer (TIMERx, x=0, 7)Hall sensor function***.

Master-slave management

The TIMERx can be synchronized with a trigger in several modes including restart mode, pause mode and event mode and so on, which is selected by the TSCFGy[4:0] (y=3..7) in SYSCFG_TIMERxCFG(x=1..4,22,23,30,31).

Table 24-13. Examples of slave mode

	Mode Selection	Source Selection	Polarity Selection	Filter and Prescaler
LIST	TSCFGy[4:0] y=3: restart mode y=4: pause mode y=5: event mode y=6: external clock mode 0 y=7: restart + event mode	TSCFGy[4:0] 00000:Mode disable 00001: ITI0 00010: ITI1 00011: ITI2 00100: ITI3 00101: CI0F_ED 00110: CI0FE0 00111: CI1FE1 01000: ETIFP(1) 01001: ITI4 01010: ITI5 01100: ITI7 01110: ITI9 01111: ITI10 10000: ITI11 10001: ITI12 10010: ITI13 10011: ITI14	If CI0FE0 or CI1FE1 is selected as the trigger source, configure the CHxP and CHxNP for the polarity selection and inversion. If ETIFP (the filtered output of external trigger input ETI) is selected as the trigger source, configure the ETP for polarity selection and inversion.	For the ITIx, no filter and prescaler can be used. For the CIx, filter can be used by configuring CHxCAPFLT, no prescaler can be used. For the ETIFP, filter can be used by configuring ETFC and prescaler can be used by configuring ETPSC.
Exam1	**Restart mode** The counter will be cleared and restart when a rising edge of trigger input comes.	TSCFG3[4:0] 5'b00001, ITI0 is selected.	For ITI0, no polarity selector can be used.	For the ITI0, no filter and prescaler can be used.

<table>
<tr><th></th><th>Mode Selection</th><th>Source Selection</th><th>Polarity Selection</th><th>Filter and Prescaler</th></tr>
<tr><td></td><td colspan="4">

Figure 24-76. Restart mode

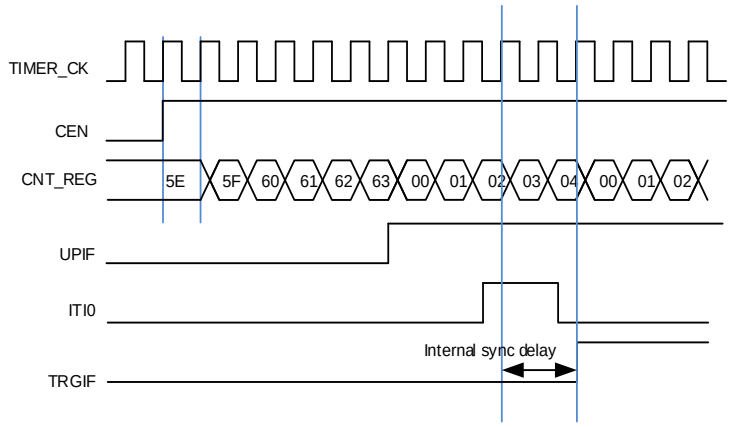

</td></tr>
<tr><td rowspan="2">Exam2</td><td>**Pause mode**
The counter will be paused when the trigger input is low, and it will start when the trigger input is high.</td><td>TSCFG4[4:0] =5’b00110, CI0FE0 is selected.</td><td>TI0S = 0 (Non-xor) [CH0NP=0, CH0P=0] CI0FE0 does not invert. The capture event will occur on the rising edge only.</td><td>Filter is bypassed in this example.</td></tr>
<tr><td colspan="4">

Figure 24-77. Pause mode

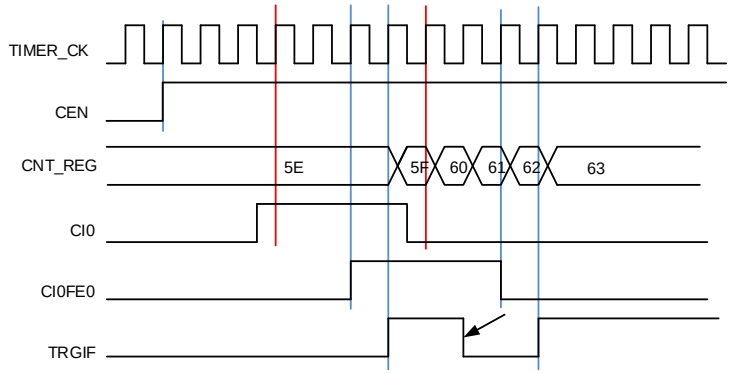

</td></tr>
<tr><td rowspan="2">Exam3</td><td>**Event mode**
The counter will start to count when a rising edge of trigger input comes.</td><td>TSCFG5[4:0] =5’b01000, ETIFP is selected.</td><td>ETP = 0, the polarity of ETI does not change.</td><td>ETPSC = 1, ETI is divided by 2.
ETFC = 0, ETI does not filter.</td></tr>
<tr><td colspan="4">

Figure 24-78. Event mode

</td></tr>
</table>

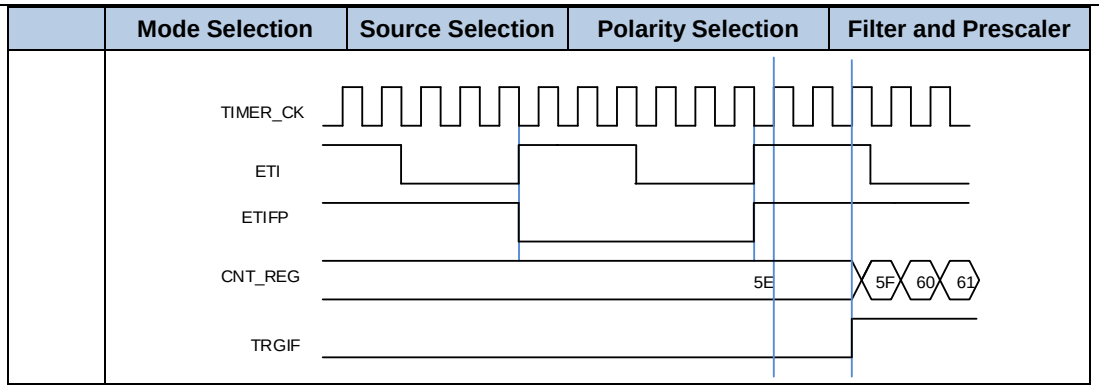

(1) The ETI signal can be input from an external ETI pin or provide by on-chip peripherals, please refer to ***Trigger selection for TIMER1_ETI register (TRIGSEL_TIMER1ETI)*** for more details.

Single pulse mode

Single pulse mode is opposite to the repetitive mode, which can be enabled by setting SPM in TIMERx_CTL0. If SPM is set, the counter will be cleared and stopped automatically when the next update event occurs. In order to get a pulse waveform, the TIMERx is configured to PWM mode or compare mode by CHxCOMCTL bit.

Once the timer is set to the single pulse mode, it is not necessary to configure the timer enable bit CEN in the TIMERx_CTL0 register to 1 to enable the counter. Setting the CEN bit to 1 or a trigger signal edge can generate a pulse and then keep the CEN bit at a high state until the update event occurs or the CEN bit is written to 0 by software. If the CEN bit is cleared to 0 by software, the counter will be stopped and its value will be held. If the CEN bit is automatically cleared to 0 by a hardware update event, the counter will be reinitialized.

In the single pulse mode, the active edge of trigger which sets the CEN bit to 1 will enable the counter. However, there exists several clock delays to perform the comparison result between the counter value and the TIMERx_CHxCV value. After a trigger rising occurs in the single pulse mode, the OxCPRE signal will immediately be forced to the state which the OxCPRE signal will change to, as the compare match event occurs without taking the comparison result into account.

Single pulse mode is also applicable to composite PWM mode (CHxCPWMEN = 1’b1 and CHxMS[2:0] = 3’b000).

Figure 24-79. Single pulse mode TIMERx_CHxCV = 0x04, TIMERx_CAR=0x60

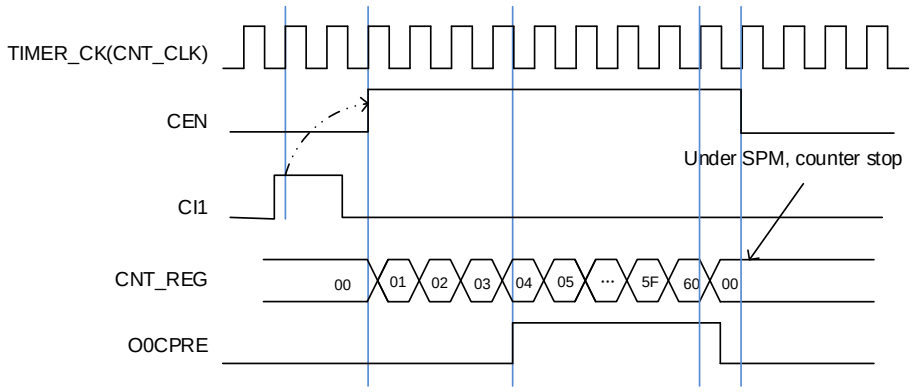

Delayable single pulse mode

Delayable single pulse mode is enabled by setting CHxCOMCTL[3:0] in TIMERx_CHCTLx registers. In this mode, the pulse width of OxCPRE signal is determined by the TIMERx_CAR register.

Once the timer is set to the delayable single pulse mode, the following configuration is required:

- TIMERx need to work in slave mode and TSCFG7[4:0] != 5'b00000 in SYSCFG_TIMERxCFG(x=1..4,22,23,30,31);
- The CHxCOMCTL[3:0] bit-field is setting to 4'b1000 (delayable single pulse mode 0) or 4'b1001 (delayable single pulse mode 1).

In delayable SPM mode 0. The behavior of OxCPREis performed as in PWM mode 0. When counting up, the OxCPRE is active. When a trigger event occurs, the OxCPRE is inactive. The OxCPRE is active again at the next update event; When counting down, the OxCPRE is inactive, when a trigger event occurs, the OxCPRE is active. The OxCPRE is inactive again at the next update event.

In delayable mode 1. The behavior of OxCPRE is performed as in PWM mode 1. When counting up, the OxCPRE is inactive, when a trigger event occurs, the OxCPRE is active. The OxCPRE is inactive again at the next update event; When counting down, the OxCPRE is active. When a trigger event occurs, the OxCPRE is inactive. The OxCPRE is active again at the next update event.

Note:

1) The center-aligned counting mode cannot be used in this mode and the CAM[1:0] = 2'b00(in TIMERx_CTL0 register);
2) When counter counting up (DIR = 0 in TIMERx_CTL0 register), the value of TIMERx_CHxCV should be set to 0; When counting down (DIR =1 in TIMERx_CTL0 register), the value of TIMERx_CHxCV should be greater than or equal to the value of TIMERx_CAR register.

Figure 24-80. delayable single pulse mode TIMERx_CHxCV=0x00, TIMERx_CAR=0x60

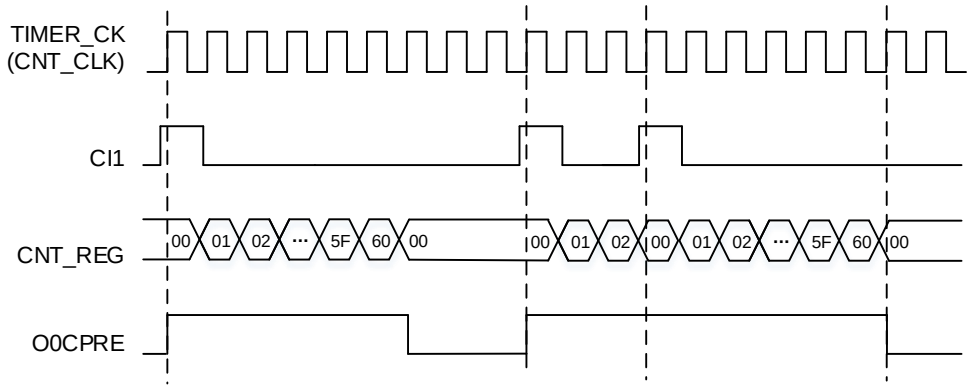

Timers interconnection

Please refer to ***Advanced timer (TIMERx, x=0, 7)Timers interconnection***.

Timer DMA mode

Timer DMA mode is the function that configures timer's register by DMA module. The relative registers are TIMERx_DMACFG and TIMERx_DMATB. Corresponding DMA request bit should be asserted to enable DMA request for internal interrupt event. TIMERx will send a request to DMA when the interrupt event occurs. DMA is configured to M2P (memory to peripheral) mode and the address of TIMERx_DMATB is configured to PADDR (peripheral base address), then DMA will access the TIMERx_DMATB. In fact, TIMERx_DMATB register is only a buffer, timer will map the TIMERx_DMATB to an internal register, appointed by the field of DMATA in TIMERx_DMACFG. If the field of DMATC in TIMERx_DMACFG is 0 (1 transfer), the timer sends only one DMA request. While if TIMERx_DMATC is not 0, such as 3 (4 transfers), then timer will send 3 more requests to DMA, and DMA will access timer's registers DMATA+0x4, DMATA+0x8 and DMATA+0xC at the next 3 accesses to TIMERx_DMATB. In a word, one-time DMA internal interrupt event asserts, (DMATC+1) times request will be sent by TIMERx.

If one more DMA request event occurs, TIMERx will repeat the process above.

UPIF bit backup

The UPIF bit backup function is enabled by setting UPIFBUEN in the TIMERx_CTL0 register. The UPIF and UPIFBU bits are fully synchronized and without latency.

By using this function, the UPIF bit in the TIMERx_INTF register will be backuped to the UPIFBU bit in the TIMERx_CNT register. This can avoid conflicts when reading the counter and interrupt processing.

Timer debug mode

When the Cortex®-M7 is halted, and the TIMERx_HOLD configuration bit in DBG_CTL

register set to 1, the TIMERx counter stops.

24.2.5. Registers definition (TIMERx, x=1,2,3,4,22,23,30,31)

TIMER1 base address: 0x4000 0000

TIMER2 base address: 0x4000 0400

TIMER3 base address: 0x4000 0800

TIMER4 base address: 0x4000 0C00

TIMER22 base address: 0x4000 E000

TIMER23 base address: 0x4000 E400

TIMER30 base address: 0x4000 E800

TIMER31 base address: 0x4000 EC00

Control register 0 (TIMERx_CTL0)

Address offset: 0x00
Reset value: 0x0000 0000

This register has to be accessed by word (32-bit).

31	30	29	28	27	26	25	24	23	22	21	20	19	18	17	16
Reserved															

15	14	13	12	11	10	9	8	7	6	5	4	3	2	1	0
Reserved				UPIFBUEN	Reserved	CKDIV[1:0]		ARSE	CAM[1:0]		DIR	SPM	UPS	UPDIS	CEN
				rw		rw		rw	rw		rw	rw	rw	rw	rw

Bits	Fields	Descriptions
31:12	Reserved	Must be kept at reset value.
11	UPIFBUEN	UPIF bit backup enable 0: Backup disable. UPIF bit is not backuped to UPIFBU bit in TIMERx_CNT register. 1: Backup enabled. UPIF bit is backuped to UPIFBU bit in TIMERx_CNT register.
10	Reserved	Must be kept at reset value.
9:8	CKDIV[1:0]	Clock division The CKDIV bits can be configured by software to specify division ratio between CK_TIMER (the timer clock) and DTS (the dead time and sampling clock) which is used for the dead time generator and the digital filter. 00: $f_{DTS}= f_{CK_TIMER}$ 01: $f_{DTS}= f_{CK_TIMER}$ /2 10: $f_{DTS}= f_{CK_TIMER}$ /4 11: Reserved

7	ARSE	Auto-reload shadow enable 0: The shadow register for TIMERx_CAR register is disabled 1: The shadow register for TIMERx_CAR register is enabled
6:5	CAM[1:0]	Counter align mode selection 00: No center-aligned mode (edge-aligned mode). The direction of the counter is specified by the DIR bit. 01: Center-aligned and counting down assert mode. The counter counts in center-aligned mode and channel is configured in output mode (CHxMS = 3'b000 in TIMERx_CHCTL0 register). Only when the counter is counting down, compare interrupt flag of channels can be set. 10: Center-aligned and counting up assert mode. The counter counts in center-aligned mode and channel is configured in output mode (CHxMS = 3'b000 in TIMERx_CHCTL0 register). Only when the counter is counting up, compare interrupt flag of channels can be set. 11: Center-aligned and counting up/down assert mode. The counter counts in center-aligned mode and channel is configured in output mode (CHxMS = 3'b000 in TIMERx_CHCTL0 register). Both when the counter is counting up and counting down, compare interrupt flag of channels can be set. After the counter is enabled, these bits cannot be switched from 0x00 to non 0x00.
4	DIR	Direction 0: Count up 1: Count down This bit is read only when the timer is configured in center-aligned mode or decoder mode.
3	SPM	Single pulse mode 0: Single pulse mode is disabled. Counter continues after an update event. 1: Single pulse mode is enabled. The CEN bit is cleared by hardware and the counter stops at next update event.
2	UPS	Update source This bit is used to select the update event sources by software. 0: Any of the following events generates an update interrupt or a DMA request: - The UPG bit is set. - The counter generates an overflow or underflow event. - The slave mode controller generates an update event. 1: Only counter overflow/underflow generates an update interrupt or a DMA request.
1	UPDIS	Update disable This bit is used to enable or disable the update event generation. 0: Update event enable. The update event is generated and the buffered registers are loaded with their preloaded values when one of the following events occurs: - The UPG bit is set. - The counter generates an overflow or underflow event.

		– The slave mode controller generates an update event. 1: Update event disable. The buffered registers keep their value, while the counter and the prescaler are reinitialized if the UG bit is set or the slave mode controller generates a hardware reset event.
0	CEN	Counter enable 0: Counter disable 1: Counter enable The CEN bit must be set by software when timer works in external clock mode, pause mode or decoder mode. While in event mode, the hardware can set the CEN bit automatically.

Control register 1 (TIMERx_CTL1)

Address offset: 0x04
Reset value: 0x0000 0000

This register has to be accessed by word (32-bit).

31	30	29	28	27	26	25	24	23	22	21	20	19	18	17	16
Reserved															

15	14	13	12	11	10	9	8	7	6	5	4	3	2	1	0
Reserved								TI0S	MMC0[2:0]			DMAS	Reserved		
								rw	rw			rw			

Bits	Fields	Descriptions
31:8	Reserved	Must be kept at reset value.
7	TI0S	Channel 0 trigger input selection 0: The TIMERx_CH0 pin input is selected as channel 0 trigger input. 1: The result of combinational XOR of TIMERx_CH0, TIMERx_CH1 and TIMERx_CH2 pins is selected as channel 0 trigger input.
6:4	MMC0[2:0]	Master mode control 0 These bits control the selection of TRGO0 signal, which is sent by master timer to slave timer for synchronization function. 000: Reset. When the UPG bit in the TIMERx_SWEVG register is set or a reset is generated by the slave mode controller, a TRGO0 pulse occurs. And in the latter case, the signal on TRGO0 is delayed compared to the actual reset. 001: Enable. This mode is used to start several timers at the same time or control a slave timer to be enabled in a period. In this mode, the master mode controller selects the counter enable signal as TRGO0. The counter enable signal is set when CEN control bit is set or the trigger input in pause mode is high. There is a delay between the trigger input in pause mode and the TRGO0 output, except if the master-slave mode is selected.

		010: Update. In this mode, the master mode controller selects the update event as TRGO0. 011: Capture/compare pulse. In this mode, the master mode controller generates a TRGO0 pulse when a capture or a compare match occurs in channel 0. 100: Compare. In this mode, the master mode controller selects the O0CPRE signal as TRGO0. 101: Compare. In this mode, the master mode controller selects the O1CPRE signal as TRGO0. 110: Compare. In this mode, the master mode controller selects the O2CPRE signal as TRGO0. 111: Compare. In this mode, the master mode controller selects the O3CPRE signal as TRGO0.
3	DMAS	DMA request source selection 0: DMA request of CHx is sent when capture/compare event occurs. 1: DMA request of channel CHx is sent when update event occurs.
2:0	Reserved	Must be kept at reset value.

Slave mode configuration register (TIMERx_SMCFG)

Address offset: 0x08

Reset value: 0x0000 0000

This register has to be accessed by word (32-bit).

31	30	29	28	27	26	25	24	23	22	21	20	19	18	17	16
Reserved															

15	14	13	12	11	10	9	8	7	6	5	4	3	2	1	0
ETP	SMC1	ETPSC[1:0]		ETFC[3:0]				MSM	Reserved						
rw	rw	rw		rw				rw							

Bits	Fields	Descriptions
31:16	Reserved	Must be kept at reset value.
15	ETP	External trigger polarity This bit specifies the polarity of ETI signal. 0: ETI is active at high level or rising edge. 1: ETI is active at low level or falling edge.
14	SMC1	Part of slave mode controller is used to enable external clock mode 1 In external clock mode 1, the counter is clocked by any active edge of the ETIFP signal. 0: External clock mode 1 disabled 1: External clock mode 1 enabled It is possible to simultaneously use external clock mode 1 with the restart mode,

		pause mode or event mode. But the TSCFGy[4:0](y=3,4,5) bits must not be 5b'01000 in this case. The external clock input will be ETIFP if external clock mode 0 and external clock mode 1 are enabled at the same time. **Note:** External clock mode 0 enable is in TSCFG6[4:0] bit-field in SYSCFG_TIMERxCFG1 register.
13:12	ETPSC[1:0]	External trigger prescaler The frequency of external trigger signal ETIFP must not be higher than 1/4 of TIMER_CK frequency. When the frequency of external trigger signal is high, the prescaler can be enabled to reduce ETIFP frequency. 00: Prescaler disabled 01: ETIFP frequency divided by 2 10: ETIFP frequency divided by 4 11: ETIFP frequency divided by 8
11:8	ETFC[3:0]	External trigger filter control An event counter is used in the digital filter, in which a transition on the output occurs after N input events. This bit-field specifies the frequency used to sample ETIFP signal and the length of the digital filter applied to ETIFP. 0000: Filter disabled. f_{SAMP}= f_{DTS}, N=1. 0001: f_{SAMP}= f_{CK_TIMER}, N=2. 0010: f_{SAMP}= f_{CK_TIMER}, N=4. 0011: f_{SAMP}= f_{CK_TIMER}, N=8. 0100: f_{SAMP}=f_{DTS}/2, N=6. 0101: f_{SAMP}=f_{DTS}/2, N=8. 0110: f_{SAMP}=f_{DTS}/4, N=6. 0111: f_{SAMP}=f_{DTS}/4, N=8. 1000: f_{SAMP}=f_{DTS}/8, N=6. 1001: f_{SAMP}=f_{DTS}/8, N=8. 1010: f_{SAMP}=f_{DTS}/16, N=5. 1011: f_{SAMP}=f_{DTS}/16, N=6. 1100: f_{SAMP}=f_{DTS}/16, N=8. 1101: f_{SAMP}=f_{DTS}/32, N=5. 1110: f_{SAMP}=f_{DTS}/32, N=6. 1111: f_{SAMP}=f_{DTS}/32, N=8.
7	MSM	Master-slave mode This bit can be used to synchronize the selected timers to begin counting at the same time. The TRGI is used as the start event, and through TRGO, timers are connected. 0: Master-slave mode disabled 1: Master-slave mode enabled
6:0	Reserved	Must be kept at reset value.

DMA and interrupt enable register (TIMERx_DMAINTEN)

Address offset: 0x0C

Reset value: 0x0000 0000

This register has to be accessed by word (32-bit).

31	30	29	28	27	26	25	24	23	22	21	20	19	18	17	16
CH3COMADDIE	CH2COMADDIE	CH1COMADDIE	CH0COMADDIE	Reserved										DECDISIE	DECJIE
rw	rw	rw	rw											rw	rw

15	14	13	12	11	10	9	8	7	6	5	4	3	2	1	0
Reserved	TRGDEN	Reserved	CH3DEN	CH2DEN	CH1DEN	CH0DEN	UPDEN	Reserved	TRGIE	Reserved	CH3IE	CH2IE	CH1IE	CH0IE	UPIE
	rw		rw	rw	rw	rw	rw		rw		rw	rw	rw	rw	rw

Bits	Fields	Descriptions
31	CH3COMADDIE	Channel 3 additional compare interrupt enable 0: Disabled 1: Enabled **Note:** This bit just used in composite PWM mode.
30	CH2COMADDIE	Channel 2 additional compare interrupt enable 0: Disabled 1: Enabled **Note:** This bit just used in composite PWM mode.
29	CH1COMADDIE	Channel 1 additional compare interrupt enable 0: Disabled 1: Enabled **Note:** This bit just used in composite PWM mode.
28	CH0COMADDIE	Channel 0 additional compare interrupt enable 0: Disabled 1: Enabled **Note:** This bit just used in composite PWM mode.
27:18	Reserved	Must be kept at reset value.
17	DECDISIE	Quadrature decoder signal disconnection interrupt enable 0: Disabled 1: Enabled **Note:** This bit just used for quadrature decoder signal disconnection detection is enabled (when DECDISDEN =1).
16	DECJIE	Quadrature decoder signal jump (the two signals jump at the same time) interrupt enable 0: Disabled 1: Enabled

		Note: This bit just used for quadrature decoder signal jump detection is enabled (when DECJDEN =1).
15	Reserved	Must be kept at reset value.
14	TRGDEN	Trigger DMA request enable 0: Disabled 1: Enabled
13	Reserved	Must be kept at reset value.
12	CH3DEN	Channel 3 capture/compare DMA request enable 0: Disabled 1: Enabled
11	CH2DEN	Channel 2 capture/compare DMA request enable 0: Disabled 1: Enabled
10	CH1DEN	Channel 1 capture/compare DMA request enable 0: Disabled 1: Enabled
9	CH0DEN	Channel 0 capture/compare DMA request enable 0: Disabled 1: Enabled
8	UPDEN	Update DMA request enable 0: Disabled 1: Enabled
7	Reserved	Must be kept at reset value.
6	TRGIE	Trigger interrupt enable 0: Disabled 1: Enabled
5	Reserved	Must be kept at reset value.
4	CH3IE	Channel 3 capture/compare interrupt enable 0: Disabled 1: Enabled
3	CH2IE	Channel 2 capture/compare interrupt enable 0: Disabled 1: Enabled
2	CH1IE	Channel 1 capture/compare interrupt enable 0: Disabled 1: Enabled

1	CH0IE	Channel 0 capture/compare interrupt enable 0: Disabled 1: Enabled
0	UPIE	Update interrupt enable 0: Disabled 1: Enabled

Interrupt flag register (TIMERx_INTF)

Address offset: 0x10

Reset value: 0x0000 0000

This register has to be accessed by word (32-bit).

31	30	29	28	27	26	25	24	23	22	21	20	19	18	17	16
CH3COMADDIF	CH2COMADDIF	CH1COMADDIF	CH0COMADDIF	Reserved										DECDISIF	DECJIF
rc_w0	rc_w0	rc_w0	rc_w0											rc_w0	rc_w0

15	14	13	12	11	10	9	8	7	6	5	4	3	2	1	0
Reserved			CH3OF	CH2OF	CH1OF	CH0OF	Reserved		TRGIF	Reserved	CH3IF	CH2IF	CH1IF	CH0IF	UPIF
			rc_w0	rc_w0	rc_w0	rc_w0			rc_w0		rc_w0	rc_w0	rc_w0	rc_w0	rc_w0

Bits	Fields	Descriptions
31	CH3COMADDIF	Channel 3 additional compare interrupt flag. Refer to CH0COMADDIF description.
30	CH2COMADDIF	Channel 2 additional compare interrupt flag. Refer to CH0COMADDIF description.
29	CH1COMADDIF	Channel 1 additional compare interrupt flag. Refer to CH0COMADDIF description.
28	CH0COMADDIF	Channel 0 additional compare interrupt flag. This flag is set by hardware and cleared by software. If channel 0 is in output mode, this flag is set when a compare event occurs. 0: No channel 0 output compare interrupt occurred 1: Channel 0 output compare interrupt occurred **Note:** This flag just used in composite PWM mode (when CH0CPWMEN = 1'b1, CH0MS[2:0] = 3'b000 and CH0COMCTL = 4'b0110 or 4'b0111).
27:18	Reserved	Must be kept at reset value.
17	DECDISIF	Quadrature decoder signal disconnection interrupt flag 0: No quadrature decoder signal disconnection interrupt occurred 1: Quadrature decoder signal disconnection interrupt occurred **Note:** This bit just used for quadrature decoder signal disconnection detection is

		enabled (when DECDISDEN =1).
16	DECJIF	Quadrature decoder signal jump (the two signals jump at the same time) interrupt flag 0: No quadrature decoder signal jump interrupt occurred 1: Quadrature decoder signal jump interrupt occurred **Note:** This bit just used for quadrature decoder signal jump detection is enabled (when DECJDEN =1).
15:13	Reserved	Must be kept at reset value.
12	CH3OF	Channel 3 over capture flag Refer to CH0OF description
11	CH2OF	Channel 2 over capture flag Refer to CH0OF description
10	CH1OF	Channel 1 over capture flag Refer to CH0OF description
9	CH0OF	Channel 0 over capture flag When channel 0 is configured in input mode, this flag is set by hardware when a capture event occurs while CH0IF flag has already been set. This flag is cleared by software. 0: No over capture interrupt occurred 1: Over capture interrupt occurred
8:7	Reserved	Must be kept at reset value.
6	TRGIF	Trigger interrupt flag This flag is set by hardware on trigger event and cleared by software. When the slave mode controller is enabled in all modes but pause mode, an active edge of trigger input generates a trigger event. When the slave mode controller is enabled in pause mode, either edge of the trigger input can generate a trigger event. 0: No trigger event occurred 1: Trigger interrupt occurred
5	Reserved	Must be kept at reset value.
4	CH3IF	Channel 3 capture/compare interrupt flag Refer to CH0IF description
3	CH2IF	Channel 2 capture/compare interrupt flag Refer to CH0IF description
2	CH1IF	Channel 1 capture/compare interrupt flag Refer to CH0IF description
1	CH0IF	Channel 0 capture/compare interrupt flag This flag is set by hardware and cleared by software.

		If channel 0 is in input mode, this flag is set when a capture event occurs. If channel 0 is in output mode, this flag is set when a compare event occurs. If channel 0 is set to input mode, this bit will be reset by reading TIMERx_CH0CV. 0: No channel 0 interrupt occurred 1: Channel 0 interrupt occurred
0	UPIF	Update interrupt flag This bit is set by hardware when an update event occurs and cleared by software. 0: No update interrupt occurred 1: Update interrupt occurred

Software event generation register (TIMERx_SWEVG)

Address offset: 0x14

Reset value: 0x0000 0000

This register has to be accessed by word (32-bit).

31	30	29	28	27	26	25	24	23	22	21	20	19	18	17	16
CH3COMADDG	CH2COMADDG	CH1COMADDG	CH0COMADDG	Reserved											
w	w	w	w												

15	14	13	12	11	10	9	8	7	6	5	4	3	2	1	0
Reserved									TRGG	Reserved	CH3G	CH2G	CH1G	CH0G	UPG
									w		w	w	w	w	w

Bits	Fields	Descriptions
31	CH3COMADDG	Channel 3 additional compare event generation. Refer to CH0COMADDG description.
30	CH2COMADDG	Channel 2 additional compare event generation. Refer to CH0COMADDG description.
29	CH1COMADDG	Channel 1 additional compare event generation. Refer to CH0COMADDG description.
28	CH0COMADDG	Channel 0 additional compare event generation. This bit is set by software to generate a compare event in channel 0 additional, it is automatically cleared by hardware. When this bit is set, the CH0COMADDIF flag will be set, and the corresponding interrupt will be sent if enabled. 0: No generate a channel 0 additional compare event 1: Generate a channel 0 additional compare event **Note:** This bit just used in composite PWM mode(when CH0CPWMEN=1).
27:7	Reserved	Must be kept at reset value.
6	TRGG	Trigger event generation

		This bit is set by software and cleared by hardware automatically. When this bit is set, the TRGIF flag in TIMERx_INTF register will be set, related interrupt or DMA transfer can occur if enabled. 0: No generate a trigger event 1: Generate a trigger event
5	Reserved	Must be kept at reset value.
4	CH3G	Channel 3 capture or compare event generation Refer to CH0G description
3	CH2G	Channel 2 capture or compare event generation Refer to CH0G description
2	CH1G	Channel 1 capture or compare event generation Refer to CH0G description
1	CH0G	Channel 0 capture or compare event generation This bit is set by software to generate a capture or compare event in channel 0, it is automatically cleared by hardware. When this bit is set, the CH0IF flag will be set, and the corresponding interrupt or DMA request will be sent if enabled. In addition, if channel 0 is configured in input mode, the current value of the counter is captured to TIMERx_CH0CV register, and the CH0OF flag is set if the CH0IF flag has been set. 0: No generate a channel 0 capture or compare event 1: Generate a channel 0 capture or compare event
0	UPG	Update event generation This bit can be set by software, and automatically cleared by hardware. When this bit is set, the counter is cleared if the center-aligned or up counting mode is selected, while in down counting mode it takes the auto-reload value. The prescaler counter is cleared at the same time. 0: No generate an update event 1: Generate an update event

Channel control register 0 (TIMERx_CHCTL0)

Address offset: 0x18

Reset value: 0x0000 0000

This register has to be accessed by word (32-bit).

31	30	29	28	27	26	25	24	23	22	21	20	19	18	17	16
CH1MS[2]	CH0MS[2]	CH1COMADDSEN / Reserved	CH0COMADDSEN / Reserved	Reserved			CH1COMCTL[3] / Reserved	Reserved							CH0COMCTL[3] / Reserved
rw	rw	rw	rw				rw								rw
15	14	13	12	11	10	9	8	7	6	5	4	3	2	1	0

CH1COM CEN	CH1COMCTL[2:0]	CH1COM SEN	Reserved	CH1MS[1:0]	CH0COM CEN	CH0COMCTL[2:0]	CH0COM SEN	Reserved	CH0MS[1:0]
CH1CAPFLT[3:0]		CH1CAPPSC[1:0]			CH0CAPFLT[3:0]		CH0CAPPSC[1:0]		
rw		rw		rw	rw		rw		rw

Output compare mode:

Bits	Fields	Descriptions
31	CH1MS[2]	Channel 1 I/O mode selection Refer to CH1MS[1:0]description
30	CH0MS[2]	Channel 0 I/O mode selection Refer to CH0MS[1:0] description
29	CH1COMADDSEN	Channel 1 additional compare output shadow enable Refer to CH0COMADDSEN description.
28	CH0COMADDSEN	Channel 0 additional compare output shadow enable When this bit is set, the shadow register of TIMERx_CH0COMV_ADD register which updates at each update event will be enabled. 0: Channel 0 additional compare output shadow disabled 1: Channel 0 additional compare output shadow enabled The PWM mode can be used without validating the shadow register only in single pulse mode (SPM bit in TIMERx_CTL0 register is set).
27:25	Reserved	Must be kept at reset value.
24	CH1COMCTL[3]	Channel 1 compare output control Refer to CH0COMCTL[2:0] description
23:17	Reserved	Must be kept at reset value.
16	CH0COMCTL[3]	Channel 0 compare output control Refer to CH0COMCTL[2:0] description
15	CH1COMCEN	Channel 1 output compare clear enable Refer to CH0COMCEN description
14:12	CH1COMCTL[2:0]	Channel 1 compare output control Refer to CH0COMCTL[2:0] description
11	CH1COMSEN	Channel 1 output compare shadow enable Refer to CH0COMSEN description
10	Reserved	Must be kept at reset value.
9:8	CH1MS[1:0]	Channel 1 mode selection This bit-field specifies the direction of the channel and the input signal selection. The CH1MS[2:0] bit-field is writable only when the channel is not active (the CH1EN bit in TIMERx_CHCTL2 register is reset). 000: Channel 1 is configured as output. 001: Channel 1 is configured as input, IS1 is connected to CI1FE1.

		010: Channel 1 is configured as input, IS1 is connected to CI0FE1. 011: Channel 1 is configured as input, IS1 is connected to ITS. This mode is working only if an internal trigger input is selected (through TSCFG15[4:0] bit-field in SYSCFG_TIMERxCFG2(x=1...4,22,23,30,31) register). 100~111: Reserved.
7	CH0COMCEN	Channel 0 output compare clear enable When this bit is set, the O0CPRE signal is cleared when high level is detected on ETIFP input. 0: Channel 0 output compare clear disabled 1: Channel 0 output compare clear enabled
6:4	CH0COMCTL[2:0]	Channel 0 compare output control The CH0COMCTL[3] and CH0COMCTL[2:0] bit-field control the behavior of O0CPRE which drives CH0_O. The active level of O0CPRE is high, while the active level of CH0_O depends on CH0P bit. 0000: Timing mode. The O0CPRE signal keeps stable, independent of the comparison between the register TIMERx_CH0CV and the counter TIMERx_CNT. 0001: Set the channel output on match. O0CPRE signal is forced high when the counter matches the output compare register TIMERx_CH0CV. 0010: Clear the channel output on match. O0CPRE signal is forced low when the counter matches the output compare register TIMERx_CH0CV. 0011: Toggle on match. O0CPRE toggles when the counter matches the output compare register TIMERx_CH0CV. 0100: Force low. O0CPRE is forced low level. 0101: Force high. O0CPRE is forced high level. 0110: PWM mode 0. When counting up, O0CPRE is active as long as the counter is smaller than TIMERx_CH0CV, otherwise it is inactive. When counting down, O0CPRE is inactive as long as the counter is larger than TIMERx_CH0CV, otherwise it is active. 0111: PWM mode 1. When counting up, O0CPRE is inactive as long as the counter is smaller than TIMERx_CH0CV, otherwise it is active. When counting down, O0CPRE is active as long as the counter is larger than TIMERx_CH0CV, otherwise it is inactive. 1000: Delayable SPM mode 0. The behavior of O0CPRE is performed as in PWM mode 0. When counting up, the O0CPRE is active. When a trigger event occurs, the O0CPRE is inactive. The O0CPRE is active again at the next update event; When counting down, the O0CPRE is inactive, when a trigger event occurs, the O0CPRE is active. The O0CPRE is inactive again at the next update event. 1001: Delayable SPM mode 1. The behavior of O0CPRE is performed as in PWM mode 1. When counting up, the O0CPRE is inactive, when a trigger event occurs, the O0CPRE is active. The O0CPRE is inactive again at the next update event; When counting down, the O0CPRE is active. When a trigger event occurs, the O0CPRE is inactive. The O0CPRE is active again at the next update event. 1010~1111: Reserved.

		Note: In the composite PWM mode (CH0CPWMEN = 1'b1 and CH0MS = 3'b000), the PWM signal output in channel 0 is composited by TIMERx_CH0CV and TIMERx_CH0COMV_ADD. Please refer to ***Composite PWM mode*** for more details. If configured in PWM mode, the O0CPRE level changes only when the output compare mode switches from "Timing" mode to "PWM" mode or the result of the comparison changes.
3	CH0COMSEN	Channel 0 compare output shadow enable When this bit is set, the shadow register of TIMERx_CH0CV register which updates at each update event will be enabled. 0: Channel 0 output compare shadow disabled 1: Channel 0 output compare shadow enabled The PWM mode can be used without validating the shadow register only in single pulse mode (SPM bit in TIMERx_CTL0 register is set).
2	Reserved	Must be kept at reset value.
1:0	CH0MS[1:0]	Channel 0 I/O mode selection This bit-field specifies the work mode of the channel and the input signal selection. The CH0MS[2:0] bit-field is writable only when the channel is not active (the CH0EN bit in TIMERx_CHCTL2 register is reset). 000: Channel 0 is configured as output. 001: Channel 0 is configured as input, IS0 is connected to CI0FE0. 010: Channel 0 is configured as input, IS0 is connected to CI1FE0. 011: Channel 0 is configured as input, IS0 is connected to ITS, this mode is working only if an internal trigger input is selected (through TSCFG15[4:0] bit-field in SYSCFG_TIMERxCFG2(x=1...4,22,23,30,31) register). 100~111: Reserved.

Input capture mode:

Bits	Fields	Descriptions
31	CH1MS[2]	Channel 1 I/O mode selection Same as output compare mode.
30	CH0MS[2]	Channel 0 I/O mode selection Same as output compare mode.
29:16	Reserved	Must be kept at reset value.
15:12	CH1CAPFLT[3:0]	Channel 1 input capture filter control Refer to CH0CAPFLT description.
11:10	CH1CAPPSC[1:0]	Channel 1 input capture prescaler Refer to CH0CAPPSC description.
9:8	CH1MS[1:0]	Channel 1 I/O mode selection

		Same as output compare mode.
7:4	CH0CAPFLT[3:0]	Channel 0 input capture filter control An event counter is used in the digital filter, in which a transition on the output occurs after N input events. This bit-field specifies the frequency used to sample CI0 input signal and the length of the digital filter applied to CI0. 0000: Filter disabled, $f_{SAMP}=f_{DTS}$, N=1. 0001: $f_{SAMP}=f_{CK_TIMER}$, N=2. 0010: $f_{SAMP}= f_{CK_TIMER}$, N=4. 0011: $f_{SAMP}= f_{CK_TIMER}$, N=8. 0100: $f_{SAMP}=f_{DTS}/2$, N=6. 0101: $f_{SAMP}=f_{DTS}/2$, N=8. 0110: $f_{SAMP}=f_{DTS}/4$, N=6. 0111: $f_{SAMP}=f_{DTS}/4$, N=8. 1000: $f_{SAMP}=f_{DTS}/8$, N=6. 1001: $f_{SAMP}=f_{DTS}/8$, N=8. 1010: $f_{SAMP}=f_{DTS}/16$, N=5. 1011: $f_{SAMP}=f_{DTS}/16$, N=6. 1100: $f_{SAMP}=f_{DTS}/16$, N=8. 1101: $f_{SAMP}=f_{DTS}/32$, N=5. 1110: $f_{SAMP}=f_{DTS}/32$, N=6. 1111: $f_{SAMP}=f_{DTS}/32$, N=8.
3:2	CH0CAPPSC[1:0]	Channel 0 input capture prescaler This bit-field specifies the factor of the prescaler on channel 0 input. The prescaler is reset when CH0EN bit in TIMERx_CHCTL2 register is cleared. 00: Prescaler disabled, capture is done on each channel input edge. 01: Capture is done every 2 channel input edges. 10: Capture is done every 4 channel input edges. 11: Capture is done every 8 channel input edges.
1:0	CH0MS[1:0]	Channel 0 I/O mode selection Same as output compare mode.

Channel control register 1 (TIMERx_CHCTL1)

Address offset: 0x1C

Reset value: 0x0000 0000

This register has to be accessed by word (32-bit).

31	30	29	28	27	26	25	24	23	22	21	20	19	18	17	16
CH3MS[2]	CH2MS[2]	CH3COMADDSEN	CH2COMADDSEN	Reserved			CH3COMCTL[3]								CH2COMCTL[3]
		Reserved	Reserved				Reserved								Reserved
rw	rw	rw	rw				rw								rw

15	14	13	12	11	10	9	8	7	6	5	4	3	2	1	0
CH3COMCEN	CH3COMCTL[2:0]			CH3COMSEN	Reserved	CH3MS[1:0]		CH2COMCEN	CH2COMCTL[2:0]			CH2COMSEN	Reserved	CH2MS[1:0]	
CH3CAPFLT[3:0]				CH3CAPPSC[1:0]				CH2CAPFLT[3:0]				CH2CAPPSC[1:0]			
rw				rw		rw		rw				rw		rw	

Output compare mode:

Bits	Fields	Descriptions
31	CH3MS[2]	Channel 3 I/O mode selection Refer to CH3MS[1:0]description.
30	CH2MS[2]	Channel 2 I/O mode selection Refer to CH2MS[1:0] description.
29	CH3COMADDSEN	Channel 3 additional compare output shadow enable Refer to CH2COMADDSEN description.
28	CH2COMADDSEN	Channel 2 additional compare output shadow enable When this bit is set, the shadow register of TIMERx_CH2COMV_ADD register which updates at each update event will be enabled. 0: Channel 2 additional compare shadow disabled 1: Channel 2 additional compare shadow enabled The PWM mode can be used without validating the shadow register only in single pulse mode (SPM bit in TIMERx_CTL0 register is set).
27:25	Reserved	Must be kept at reset value.
24	CH3COMCTL[3]	Channel 3 compare output control Refer to CH2COMCTL[2:0] description
23:17	Reserved	Must be kept at reset value.
16	CH2COMCTL[3]	Channel 2 compare output control Refer to CH2COMCTL[2:0] description
15	CH3COMCEN	Channel 3 output compare clear enable Refer to CH2COMCEN description
14:12	CH3COMCTL[2:0]	Channel 3 compare output control Refer to CH2COMCTL[2:0] description
11	CH3COMSEN	Channel 3 output compare shadow enable Refer to CH2COMSEN description
10	Reserved	Must be kept at reset value.
9:8	CH3MS[1:0]	Channel 3 I/O mode selection This bit-field specifies the direction of the channel and the input signal selection. The CH3MS[2:0] bit-field is writable only when the channel is not active (the CH3EN bit in TIMERx_CHCTL2 register is reset). 00: Channel 3 is configured as output.

		01: Channel 3 is configured as input, IS3 is connected to CI3FE3. 10: Channel 3 is configured as input, IS3 is connected to CI2FE3. 11: Channel 3 is configured as input, IS3 is connected to ITS, this mode is working only if an internal trigger input is selected (through TSCFG15[4:0] bit-field in SYSCFG_TIMERxCFG2(x=1...4,22,23,30,31) register). 100~111: Reserved.
7	CH2COMCEN	Channel 2 output compare clear enable. When this bit is set, the O2CPRE signal is cleared when high level is detected on ETIFP input. 0: Channel 2 output compare clear disabled 1: Channel 2 output compare clear enabled
6:4	CH2COMCTL[2:0]	Channel 2 compare output control This bit-field controls the behavior of O2CPRE which drives CH2_O. The active level of O2CPRE is high, while the active level of CH2_O depends on CH2P bit. 0000: Timing mode. The O2CPRE signal keeps stable, independent of the comparison between the output compare register TIMERx_CH2CV and the counter TIMERx_CNT. 0001: Set the channel output on match. O2CPRE signal is forced high when the counter matches the output compare register TIMERx_CH2CV. 0010: Clear the channel output on match. O2CPRE signal is forced low when the counter matches the output compare register TIMERx_CH2CV. 0011: Toggle on match. O2CPRE toggles when the counter matches the output compare register TIMERx_CH2CV. 0100: Force low. O2CPRE is forced low level. 0101: Force high. O2CPRE is forced high level. 0110: PWM mode 0. When counting up, O2CPRE is active as long as the counter is smaller than TIMERx_CH2CV, otherwise it is inactive. When counting down, O2CPRE is inactive as long as the counter is larger than TIMERx_CH2CV, otherwise it is active. 0111: PWM mode 1. When counting up, O2CPRE is inactive as long as the counter is smaller than TIMERx_CH2CV, otherwise it is active. When counting down, O2CPRE is active as long as the counter is larger than TIMERx_CH2CV, otherwise it is inactive. 1000: Delayable SPM mode 0. The behavior of O2CPRE is performed as in PWM mode 0. When counting up, the O2CPRE is active. When a trigger event occurs, the O2CPRE is inactive. The O2CPRE is active again at the next update event; When counting down, the O2CPRE is inactive, when a trigger event occurs, the O2CPRE is active. The O2CPRE is inactive again at the next update event. 1001: Delayable SPM mode 1. The behavior of O2CPRE is performed as in PWM mode 1. When counting up, the O2CPRE is inactive, when a trigger event occurs, the O2CPRE is active. The O2CPRE is inactive again at the next update event; When counting down, the O2CPRE is active. When a trigger event occurs, the O2CPRE is inactive. The O2CPRE is active again at the next update event.

		1010~1111: Reserved. **Note**: In the composite PWM mode (CH2CPWMEN = 1'b1 and CH2MS = 3'b000), the PWM signal output in channel 2 is composited by TIMERx_CH2CV and TIMERx_CH2COMV_ADD. Please refer to ***Composite PWM mode*** for more details. If configured in PWM mode, the O2CPRE level changes only when the output compare mode switches from "Timing" mode to "PWM" mode or the result of the comparison changes.
3	CH2COMSEN	Channel 2 compare output shadow enable When this bit is set, the shadow register of TIMERx_CH2CV register, which updates at each update event will be enabled. 0: Channel 2 output compare shadow disabled 1: Channel 2 output compare shadow enabled The PWM mode can be used without validating the shadow register only in single pulse mode (SPM bit in TIMERx_CTL0 register is set).
2	Reserved	Must be kept at reset value.
1:0	CH2MS[1:0]	Channel 2 I/O mode selection This bit-field specifies the work mode of the channel and the input signal selection. The CH2MS[2:0] bit-field is writable only when the channel is not active (the CH2EN bit in TIMERx_CHCTL2 register is reset). 00: Channel 2 is configured as output. 01: Channel 2 is configured as input, IS2 is connected to CI2FE2. 10: Channel 2 is configured as input, IS2 is connected to CI3FE2. 11: Channel 2 is configured as input, IS2 is connected to ITS. This mode is working only if an internal trigger input is selected (through TSCFG15[4:0] bit-field in SYSCFG_TIMERxCFG2(x=1...4,22,23,30,31) register). 100~111: Reserved.

Input capture mode:

Bits	Fields	Descriptions
31	CH3MS[2]	Channel 3 I/O mode selection Same as output compare mode.
30	CH2MS[2]	Channel 2 I/O mode selection Same as output compare mode.
31:16	Reserved	Must be kept at reset value.
15:12	CH3CAPFLT[3:0]	Channel 3 input capture filter control Refer to CH2CAPFLT description.
11:10	CH3CAPPSC[1:0]	Channel 3 input capture prescaler Refer to CH2CAPPSC description.
9:8	CH3MS[1:0]	Channel 3 mode selection

		Same as output compare mode.
7:4	CH2CAPFLT[3:0]	Channel 2 input capture filter control An event counter is used in the digital filter, in which a transition on the output occurs after N input events. This bit-field specifies the frequency used to sample CI2 input signal and the length of the digital filter applied to CI2. 0000: Filter disabled, $f_{SAMP}=f_{DTS}$, N=1. 0001: $f_{SAMP}=f_{CK_TIMER}$, N=2. 0010: $f_{SAMP}= f_{CK_TIMER}$, N=4. 0011: $f_{SAMP}= f_{CK_TIMER}$, N=8. 0100: $f_{SAMP}=f_{DTS}/2$, N=6. 0101: $f_{SAMP}=f_{DTS}/2$, N=8. 0110: $f_{SAMP}=f_{DTS}/4$, N=6. 0111: $f_{SAMP}=f_{DTS}/4$, N=8. 1000: $f_{SAMP}=f_{DTS}/8$, N=6. 1001: $f_{SAMP}=f_{DTS}/8$, N=8. 1010: $f_{SAMP}=f_{DTS}/16$, N=5. 1011: $f_{SAMP}=f_{DTS}/16$, N=6. 1100: $f_{SAMP}=f_{DTS}/16$, N=8. 1101: $f_{SAMP}=f_{DTS}/32$, N=5. 1110: $f_{SAMP}=f_{DTS}/32$, N=6. 1111: $f_{SAMP}=f_{DTS}/32$, N=8.
3:2	CH2CAPPSC[1:0]	Channel 2 input capture prescaler This bit-field specifies the factor of the prescaler on channel 2 input. The prescaler is reset when CH2EN bit in TIMERx_CHCTL2 register is cleared. 00: Prescaler disabled, capture is done on each channel input edge. 01: Capture is done every 2 channel input edges. 10: Capture is done every 4 channel input edges. 11: Capture is done every 8 channel input edges.
1:0	CH2MS[1:0]	Channel 2 mode selection Same as output compare mode.

Channel control register 2 (TIMERx_CHCTL2)

Address offset: 0x20

Reset value: 0x0000 0000

This register can be accessed by half-word(16-bit) or word(32-bit).

31	30	29	28	27	26	25	24	23	22	21	20	19	18	17	16
Reserved															

15	14	13	12	11	10	9	8	7	6	5	4	3	2	1	0
CH3NP	Reserved	CH3P	CH3EN	CH2NP	Reserved	CH2P	CH2EN	CH1NP	Reserved	CH1P	CH1EN	CH0NP	Reserved	CH0P	CH0EN

rw	rw	rw	rw	rw	rw	rw	rw	rw	rw	rw	rw	rw	rw

Bits	Fields	Descriptions
31:16	Reserved	Must be kept at reset value.
15	CH3NP	Channel 3 complementary capture/compare polarity Refer to CH0NP description.
14	Reserved	Must be kept at reset value.
13	CH3P	Channel 3 capture/compare function polarity Refer to CH0P description
12	CH3EN	Channel 3 capture/compare function enable Refer to CH0EN description
11	CH2NP	Channel 2 complementary capture/compare polarity Refer to CH0NP description.
10	Reserved	Must be kept at reset value.
9	CH2P	Channel 2 capture/compare function polarity Refer to CH0P description
8	CH2EN	Channel 2 capture/compare function enable Refer to CH0EN description
7	CH1NP	Channel 1 complementary capture/compare polarity Refer to CH0NP description.
6	Reserved	Must be kept at reset value.
5	CH1P	Channel 1 capture/compare function polarity Refer to CH0P description
4	CH1EN	Channel 1 capture/compare function enable Refer to CH0EN description
3	CH0NP	Channel 0 complementary output polarity When channel 0 complementary is configured in output mode, this bit must be kept at reset value. When CH0 is configured in input mode, in conjunction with CH0P, this bit is used to define the polarity of CH0. This bit cannot be modified when PROT[1:0] bit-field in TIMERx_CCHP register is 11 or 10.
2	Reserved	Must be kept at reset value.
1	CH0P	Channel 0 capture/compare function polarity When channel 0 is configured in output mode, this bit specifies the output signal polarity.

		0: Channel 0 active high 1: Channel 0 active low When channel 0 is configured in input mode, this bit specifies the CI0 signal polarity. [CH0NP, CH0P] will select the active trigger or capture polarity for CI0FE0 or CI1FE0. 00: CIxFE0's rising edge is the active signal for capture or trigger operation in slave mode. And CIxFE0 will not be inverted. 01: CIxFE0's falling edge is the active signal for capture or trigger operation in slave mode. And CIxFE0 will be inverted. 10: Reserved. 11: Noninverted/both CIxFE0's edges. This bit cannot be modified when PROT [1:0] bit-filed in TIMERx_CCHP register is 11 or 10.
0	CH0EN	Channel 0 capture/compare function enable When channel 0 is configured in output mode, setting this bit enables CH0_O signal in active state. When channel 0 is configured in input mode, setting this bit enables the capture event in channel0. 0: Channel 0 disabled 1: Channel 0 enabled

Counter register (TIMERx_CNT) (TIMERx, x= 2,3,30,31)

Address offset: 0x24
Reset value: 0x0000 0000

This register has to be accessed by word (32-bit).

31	30	29	28	27	26	25	24	23	22	21	20	19	18	17	16
UPIFBU	Reserved														
r															

15	14	13	12	11	10	9	8	7	6	5	4	3	2	1	0
CNT[15:0]															
rw															

Bits	Fields	Descriptions
31	UPIFBU	UPIF bit backup This bit is a backup of UPIF bit in TIMERx_INTF register and read-only. This bit is only valid when UPIFBUEN = 1. If the UPIFBUEN =0, this bit is reserved and read the result is 0.
30:16	Reserved	Must be kept at reset value.
15:0	CNT[15:0]	This bit-field indicates the current counter value. Writing to this bit-field can change the value of the counter.

Counter register (TIMERx_CNT) (TIMERx, x= 1,4,22,23)

Address offset: 0x24

Reset value: 0x0000 0000

This register has to be accessed by word (32-bit).

31	30	29	28	27	26	25	24	23	22	21	20	19	18	17	16
CNT[31] / UPIFBU	CNT[30:16]														
rw /r	rw														

15	14	13	12	11	10	9	8	7	6	5	4	3	2	1	0
CNT[15:0]															
rw															

UPIFBUEN = 0:

Bits	Fields	Descriptions
31:0	CNT[31:0]	This bit-field indicates the current counter value. Writing to this bit-field can change the value of the counter.

UPIFBUEN = 1:

Bits	Fields	Descriptions
31	UPIFBU	UPIF bit backup This bit is a backup of UPIF bit in TIMERx_INTF register, and read-only. This bit is only valid when UPIFBUEN = 1. If the UPIFBUEN =0, this bit is reserved and read the result is 0.
30	CNT[30:0]	This bit-field indicates the current counter value. Writing to this bit-field can change the value of the counter.

Prescaler register (TIMERx_PSC)

Address offset: 0x28

Reset value: 0x0000 0000

This register has to be accessed by word (32-bit).

31	30	29	28	27	26	25	24	23	22	21	20	19	18	17	16
Reserved															

15	14	13	12	11	10	9	8	7	6	5	4	3	2	1	0
PSC[15:0]															
rw															

Bits	Fields	Descriptions
31:16	Reserved	Must be kept at reset value.

15:0	PSC[15:0]	Prescaler value of the counter clock The PSC clock is divided by (PSC+1) to generate the counter clock. The value of this bit-field will be loaded to the corresponding shadow register at every update event.

Counter auto reload register (TIMERx_CAR)

Address offset: 0x2C
Reset value: 0xFFFF FFFF

This register has to be accessed by word (32-bit).

31	30	29	28	27	26	25	24	23	22	21	20	19	18	17	16
CARL[31:16]															
rw															

15	14	13	12	11	10	9	8	7	6	5	4	3	2	1	0
CARL[15:0]															
rw															

Bits	Fields	Descriptions
31:16	CARL[31:16]	Counter auto reload value (bit 16 to 31) This bit-field only for TIMER1/ 4/ 22/ 23.
15:0	CARL[15:0]	Counter auto reload value This bit-field specifies the auto reload value of the counter.

Channel 0 capture/compare value register (TIMERx_CH0CV)

Address offset: 0x34
Reset value: 0x0000 0000

This register has to be accessed by word (32-bit).

31	30	29	28	27	26	25	24	23	22	21	20	19	18	17	16
CH0VAL[31:16]															
rw															

15	14	13	12	11	10	9	8	7	6	5	4	3	2	1	0
CH0VAL[15:0]															
rw															

Bits	Fields	Descriptions
31:16	CH0VAL[31:16]	Capture/compare value of channel 0 (bit 16 to 31) This bit-field only for TIMER1/ 4/ 22/ 23.
15:0	CH0VAL[15:0]	Capture/compare value of channel 0 When channel 0 is configured in input mode, this bit-field indicates the counter value at the last capture event. And this bit-field is read-only.

When channel 0 is configured in output mode, this bit-field contains value to be compared to the counter. When the corresponding shadow register is enabled, the shadow register updates by every update event.

Channel 1 capture/compare value register (TIMERx_CH1CV)

Address offset: 0x38

Reset value: 0x0000 0000

This register has to be accessed by word (32-bit).

31	30	29	28	27	26	25	24	23	22	21	20	19	18	17	16
CH1VAL[31:16]															
rw															

15	14	13	12	11	10	9	8	7	6	5	4	3	2	1	0
CH1VAL[15:0]															
rw															

Bits	Fields	Descriptions
31:16	CH1VAL[31:16]	Capture/compare value of channel 1(bit 16 to 31) This bit-field only for TIMER1/ 4/ 22/ 23.
15:0	CH1VAL[15:0]	Capture/compare value of channel 1 When channel 1 is configured in input mode, this bit-field indicates the counter value at the last capture event. And this bit-field is read-only. When channel 1 is configured in output mode, this bit-field contains value to be compared to the counter. When the corresponding shadow register is enabled, the shadow register updates by every update event.

Channel 2 capture/compare value register (TIMERx_CH2CV)

Address offset: 0x3C

Reset value: 0x0000 0000

This register has to be accessed by word (32-bit).

31	30	29	28	27	26	25	24	23	22	21	20	19	18	17	16
CH2VAL[31:16]															
rw															

15	14	13	12	11	10	9	8	7	6	5	4	3	2	1	0
CH2VAL[15:0]															
rw															

Bits	Fields	Descriptions
31:16	CH2VAL[31:16]	Capture/compare value of channel 2 (bit 16 to 31) This bit-field only for TIMER1/ 4/ 22/ 23.

15:0	CH2VAL[15:0]	Capture/compare value of channel 2 When channel 2 is configured in input mode, this bit-field indicates the counter value at the last capture event. And this bit-field is read-only. When channel 2 is configured in output mode, this bit-field contains value to be compared to the counter. When the corresponding shadow register is enabled, the shadow register updates by every update event.

Channel 3 capture/compare value register (TIMERx_CH3CV)

Address offset: 0x40

Reset value: 0x0000 0000

This register has to be accessed by word (32-bit).

31	30	29	28	27	26	25	24	23	22	21	20	19	18	17	16
CH3VAL[31:16]															
rw															

15	14	13	12	11	10	9	8	7	6	5	4	3	2	1	0
CH3VAL[15:0]															
rw															

Bits	Fields	Descriptions
31:16	CH3VAL[31:16]	Capture/compare value of channel 3 (bit 16 to 31) This bit-field only for TIMER1/ 4/ 22/ 23.
15:0	CH3VAL[15:0]	Capture/compare value of channel 3 When channel 3 is configured in input mode, this bit-field indicates the counter value at the last capture event. And this bit-field is read-only. When channel 3 is configured in output mode, this bit-field contains value to be compared to the counter. When the corresponding shadow register is enabled, the shadow register updates by every update event.

Channel 0 additional compare value register (TIMERx_CH0COMV_ADD)

Address offset: 0x64

Reset value: 0x0000 0000

This register has to be accessed by word (32-bit).

31	30	29	28	27	26	25	24	23	22	21	20	19	18	17	16
CH0COMVAL_ADD[31:16]															
rw															

15	14	13	12	11	10	9	8	7	6	5	4	3	2	1	0
CH0COMVAL_ADD[15:0]															
rw															

Bits	Fields	Descriptions
31:16	CH0COMVAL_ADD [31:16]	Additional compare value of channel 0 (bit 16 to 31) This bit-field only for TIMER1/ 4/ 22/ 23.
15:0	CH0COMVAL_ADD [15:0]	Additional compare value of channel 0 When channel 0 is configured in output mode, this bit-field contains value to be compared to the counter. When the corresponding shadow register is enabled, the shadow register updates by every update event. **Note:** This register just used in composite PWM mode(when CH0CPWMEN=1).

Channel 1 additional compare value register (TIMERx_CH1COMV_ADD)

Address offset: 0x68

Reset value: 0x0000 0000

This register has to be accessed by word (32-bit).

31	30	29	28	27	26	25	24	23	22	21	20	19	18	17	16
CH1COMVAL_ADD[31:16]															
rw															

15	14	13	12	11	10	9	8	7	6	5	4	3	2	1	0
CH1COMVAL_ADD[15:0]															
rw															

Bits	Fields	Descriptions
31:16	CH1COMVAL_ADD [31:16]	Additional compare value of channel 1 (bit 16 to 31) This bit-field only for TIMER1/ 4/ 22/ 23.
15:0	CH1COMVAL_ADD [15:0]	Additional compare value of channel 1 When channel 1 is configured in output mode, this bit-field contains value to be compared to the counter. When the corresponding shadow register is enabled, the shadow register updates by every update event. **Note:** This register just used in composite PWM mode(when CH0CPWMEN=1).

Channel 2 additional compare value register (TIMERx_CH2COMV_ADD)

Address offset: 0x6C

Reset value: 0x0000 0000

This register has to be accessed by word (32-bit).

31	30	29	28	27	26	25	24	23	22	21	20	19	18	17	16
CH2COMVAL_ADD[31:16]															
rw															

15	14	13	12	11	10	9	8	7	6	5	4	3	2	1	0
CH2COMVAL_ADD[15:0]															
rw															

Bits	Fields	Descriptions
31:16	CH2COMVAL_ADD [31:16]	Additional compare value of channel 2 (bit 16 to 31) This bit-field only for TIMER1/ 4/ 22/ 23.
15:0	CH2COMVAL_ADD [15:0]	Additional compare value of channel 2 When channel 2 is configured in output mode, this bit-field contains value to be compared to the counter. When the corresponding shadow register is enabled, the shadow register updates by every update event. **Note:** This register just used in composite PWM mode(when CH0CPWMEN=1).

Channel 3 additional compare value register (TIMERx_CH3COMV_ADD)

Address offset: 0x70

Reset value: 0x0000 0000

This register has to be accessed by word (32-bit).

31	30	29	28	27	26	25	24	23	22	21	20	19	18	17	16
CH3COMVAL_ADD[31:16]															
rw															

15	14	13	12	11	10	9	8	7	6	5	4	3	2	1	0
CH3COMVAL_ADD[15:0]															
rw															

Bits	Fields	Descriptions
31:16	CH3COMVAL_ADD [31:16]	Additional compare value of channel 3 (bit 16 to 31) This bit-field only for TIMER1/ 4/ 22/ 23.
15:0	CH3COMVAL_ADD [15:0]	Additional compare value of channel 3 When channel 3 is configured in output mode, this bit-field contains value to be compared to the counter. When the corresponding shadow register is enabled, the shadow register updates by every update event. **Note:** This register just used in composite PWM mode(when CH0CPWMEN=1).

Control register 2 (TIMERx_CTL2)

Address offset: 0x74

Reset value: 0x0000 0000

This register has to be accessed by word (32-bit).

31	30	29	28	27	26	25	24	23	22	21	20	19	18	17	16
CH3C PWMEN	CH2C PWMEN	CH1C PWMEN	CH0C PWMEN	Reserved								DECDISD EN	DECJDEN	Reserved	
rw	rw	rw	rw									rw	rw		

15	14	13	12	11	10	9	8	7	6	5	4	3	2	1	0

CH3OMPSEL[1:0]	CH2OMPSEL[1:0]	CH1OMPSEL[1:0]	CH0OMPSEL[1:0]	Reserved
rw	rw	rw	rw	

Bits	Fields	Descriptions
31	CH3CPWMEN	Channel 3 composite PWM mode enable 0: Disabled 1: Enabled
30	CH2CPWMEN	Channel 2 composite PWM mode enable 0: Disabled 1: Enabled
29	CH1CPWMEN	Channel 1 composite PWM mode enable 0: Disabled 1: Enabled
28	CH0CPWMEN	Channel 0 composite PWM mode enable 0: Disabled 1: Enabled
27:20	Reserved	Must be kept at reset value.
19	DECDISDEN	Quadrature decoder signal disconnection detection enable 0: Quadrature decoder signal disconnection detection is disabled 1: Quadrature decoder signal disconnection detection is enabled
18	DECJDEN	Quadrature decoder signal jump (the two signals jump at the same time) detection enable 0: Quadrature decoder signal jump detection is disabled 1: Quadrature decoder signal jump detection is enabled
17:16	Reserved	Must be kept at reset value.
15:14	CH3OMPSEL[1:0]	Channel 3 output match pulse select When the match events occur, this bit is used to select the output of O3CPRE which drives CH3_O. 00: The O3CPRE signal is output normally with the configuration of CH3COMCTL [2:0] bits. 01: Only the counter is counting up, the O3CPRE signal is output a pulse when the match events occur, and the pulse width is one CK_TIMER clock cycle. 10: Only the counter is counting down, the O3CPRE signal is output a pulse when the match events occur, and the pulse width is one CK_TIMER clock cycle. 11: Both the counter is counting up and counting down, the O3CPRE signal is output a pulse when the match events occur, and the pulse width is one CK_TIMER clock cycle.

13:12	CH2OMPSEL[1:0]	Channel 2 output match pulse select When the match events occur, this bit is used to select the output of O2CPRE which drives CH2_O. 00: The O2CPRE signal is output normal with the configuration of CH2COMCTL [2:0] bits. 01: Only when the counter is counting up, the O2CPRE signal is output a pulse when the match events occurs, and the pulse width is one CK_TIMER clock cycle. 10: Only when the counter is counting down, the O2CPRE signal is output a pulse when the match events occurs, and the pulse width is one CK_TIMER clock cycle. 11: Both when the counter is counting up and counting down, the O2CPRE signal is output a pulse when the match events occurs, and the pulse width is one CK_TIMER clock cycle.
11:10	CH1OMPSEL[1:0]	Channel 1 output match pulse select When the match events occur, this bit is used to select the output of O1CPRE which drives CH1_O. 00: The O1CPRE signal is output normal with the configuration of CH1COMCTL [2:0] bits. 01: Only when the counter is counting up, the O1CPRE signal is output a pulse when the match events occurs, and the pulse width is one CK_TIMER clock cycle. 10: Only when the counter is counting down, the O1CPRE signal is output a pulse when the match events occurs, and the pulse width is one CK_TIMER clock cycle. 11: Both when the counter is counting up and counting down, the O1CPRE signal is output a pulse when the match events occurs, and the pulse width is one CK_TIMER clock cycle.
9:8	CH0OMPSEL[1:0]	Channel 0 output match pulse select When the match events occur, this bit is used to select the output of O0CPRE which drives CH0_O. 00: The O0CPRE signal is output normal with the configuration of CH0COMCTL [2:0] bits. 01: Only when the counter is counting up, the O0CPRE signal is output a pulse when the match events occurs, and the pulse width is one CK_TIMER clock cycle. 10: Only when the counter is counting down, the O0CPRE signal is output a pulse when the match events occurs, and the pulse width is one CK_TIMER clock cycle. 11: Both when the counter is counting up and counting down, the O0CPRE signal is output a pulse when the match events occurs, and the pulse width is one CK_TIMER clock cycle.
7:0	Reserved	Must be kept at reset value.

Watchdog counter period register(TIMERx_WDGPER)

Address offset: 0x94

Reset value: 0xFFFF FFFF

This register has to be accessed by word (32-bit).

31	30	29	28	27	26	25	24	23	22	21	20	19	18	17	16
WDGPER[31:16]															
rw															

15	14	13	12	11	10	9	8	7	6	5	4	3	2	1	0
WDGPER[15:0]															
rw															

Bits	Fields	Descriptions
31:0	WDGPER[31:0]	Watchdog counter period value This register contains the period of the two watchdog counter. When the counters continus to count to this value, the counter will timeout and the interrupt flag DECDISIF is set. If DECDISIE=1, the corresponding interrupt is generated. Note: This register is just used in quadrature decoder signal disconnection detection function(with DECDISDEN =1).

DMA configuration register (TIMERx_DMACFG)

Address offset: 0xE0

Reset value: 0x0000 0000

This register has to be accessed by word (32-bit).

31	30	29	28	27	26	25	24	23	22	21	20	19	18	17	16
Reserved															

15	14	13	12	11	10	9	8	7	6	5	4	3	2	1	0
Reserved		DMATC[5:0]						Reserved		DMATA[5:0]					
		rw								rw					

Bits	Fields	Descriptions
31:14	Reserved	Must be kept at reset value.
13:8	DMATC[5:0]	DMA transfer count This field defines the times of accessing(R/W) the TIMERx_DMATB register by DMA. 6’b000000: transfer 1 time 6’b000001: transfer 2 times … 6’b100101: transfer 38 times
7:6	Reserved	Must be kept at reset value.
5:0	DMATA[5:0]	DMA transfer access start address This field defines the start address of accessing the TIMERx_DMATB register by DMA. When the first access to the TIMERx_DMATB register is done, this bit-field

specifies the address just accessed. And then the address of the second access to the TIMERx_DMATB register will be (start address + 0x4).

6'b000000: TIMERx_CTL0

6'b000001: TIMERx_CTL1

…

In a word: start address = TIMERx_CTL0 + DMATA*4

DMA transfer buffer register (TIMERx_DMATB)

Address offset: 0xE4

Reset value: 0x0000 0000

This register has to be accessed by word (32-bit).

31	30	29	28	27	26	25	24	23	22	21	20	19	18	17	16
DMATB[31:16]															
rw															

15	14	13	12	11	10	9	8	7	6	5	4	3	2	1	0
DMATB[15:0]															
rw															

Bits	Fields	Descriptions
31:0	DMATB[31:0]	DMA transfer buffer When a read or write operation is assigned to this register, the register located at the address ranges from (start address) to (start address + transfer count * 4) will be accessed. The transfer count is calculated by hardware, and ranges from 0 to DMATC.

Configuration register (TIMERx_CFG)

Address offset: 0xFC

Reset value: 0x0000 0000

This register has to be accessed by word (32-bit).

31	30	29	28	27	26	25	24	23	22	21	20	19	18	17	16
Reserved															

15	14	13	12	11	10	9	8	7	6	5	4	3	2	1	0
Reserved														CHVSEL	Reserved
														rw	

Bits	Fields	Descriptions
31:2	Reserved	Must be kept at reset value.

1	CHVSEL	Write CHxVAL register selection bit This bit-field is set and reset by software. 1: If the value to be written to the CHxVAL register is the same as the value of CHxVAL register, the write access is ignored. 0: No effect.
0	Reserved	Must be kept at reset value.

24.3. General level3 timer (TIMERx, x=14,40,41,42,43,44)

24.3.1. Overview

The general level3 timer module (TIMER14/40/41/42/43/44) is a three-channel timer that supports both input capture and output compare. They can generate PWM signals to control motor or be used for power management applications. The general level3 timer has a 16-bit counter that can be used as an unsigned counter.

In addition, the general level3 timers can be programmed and be used for counting, their external events can be used to drive other timers.

Timer also includes a dead-time Insertion module which is suitable for motor control applications.

Timers are completely independent with each other, but they may be synchronized to provide a larger timer with their counters incrementing in unison.

24.3.2. Characteristics

- Total channel num: 3.
- Counter width: 16-bit.
- Source of counter clock is selectable: internal clock, internal trigger, external input.
- Counter modes: count up only.
- Programmable prescaler: 16-bit. The factor can be changed on the go.
- Each channel is user-configurable: input capture mode, output compare mode, programmable PWM mode, single pulse mode.
- Programmable dead time insertion.
- Auto reload function.
- Programmable counter repetition function.
- Break input function: BREAK0.
- Interrupt output or DMA request: update, trigger event, compare/capture event, and break input.
- Daisy chaining of timer modules allows a single timer to initiate multiple timers.
- Timer synchronization allows selected timers to start counting on the same clock cycle.
- Timer master-slave management.

24.3.3. Block diagram

Figure 24-81. General level3 timer block diagram provides details of the internal

configuration of the general level3 timer.

Figure 24-81. General level3 timer block diagram

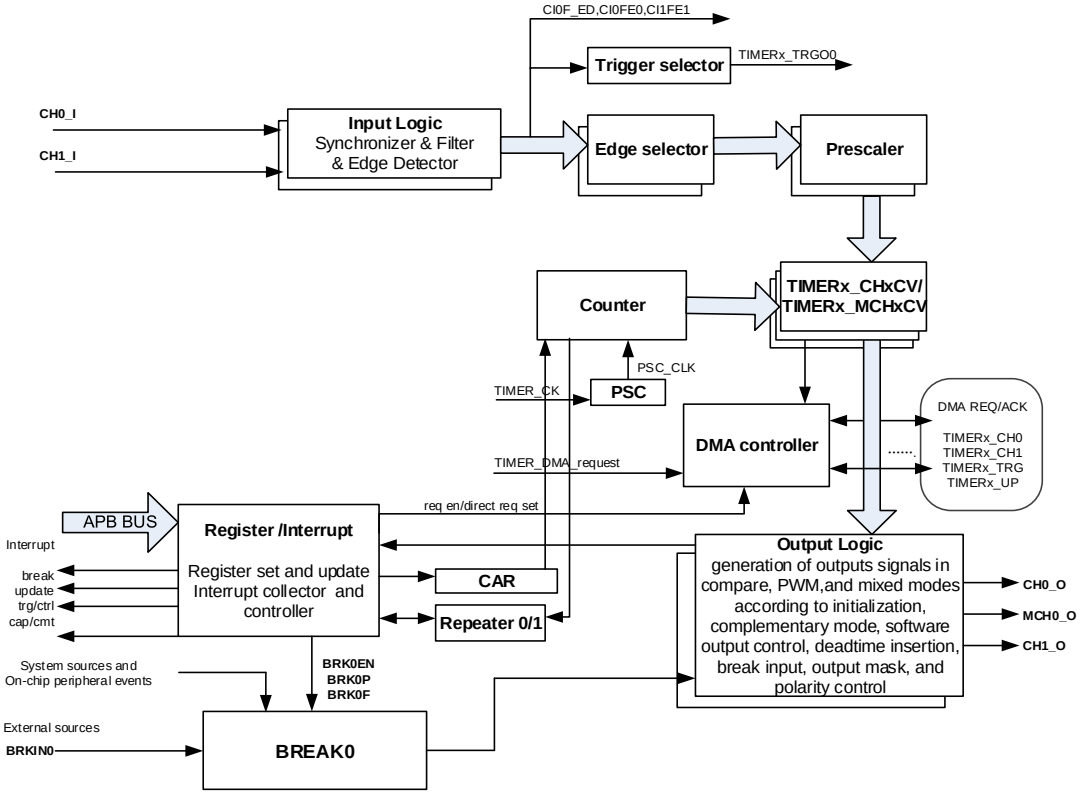

24.3.4. Function overview

Clock selection

The general level3 timer has the capability of being clocked by either the TIMER_CK or an alternate clock source controlled by TSCFGy[4:0] (y=3..7,15) in SYSCFG_TIMERxCFG(x=14,40,41,42,43,44) registers.

- TSCFGy[4:0] (y=3..7,15) = 5’b00000 in SYSCFG_TIMERxCFG(x=14,40,41,42,43,44) registers. Internal clock CK_TIMER is selected as timer clock source which is from module RCU.

The default clock source is the CK_TIMER for driving the counter prescaler when TSCFGy[4:0] (y=3..7,15) = 5’b00000 in SYSCFG_TIMERxCFG(x=14,40,41,42,43,44) registers. When the CEN is set, the CK_TIMER will be divided by PSC value to generate PSC_CLK.

In this mode, the TIMER_CK, which drives counter’s prescaler to count, is equal to CK_TIMER which is from RCU.

If TSCFG6[4:0] bit-filed in SYSCFG_TIMERxCFG(x=0,7) registers are setting to a nonzero value, the prescaler is clocked by other clock sources selected in the TSCFG6[4:0] bit-filed, more details will be introduced later. When the TSCFGy[4:0] (y=3,4,5,7) are setting to an

available value, the internal clock TIMER_CK is the counter prescaler driving clock source.

Figure 24-82. Normal mode, internal clock divided by 1

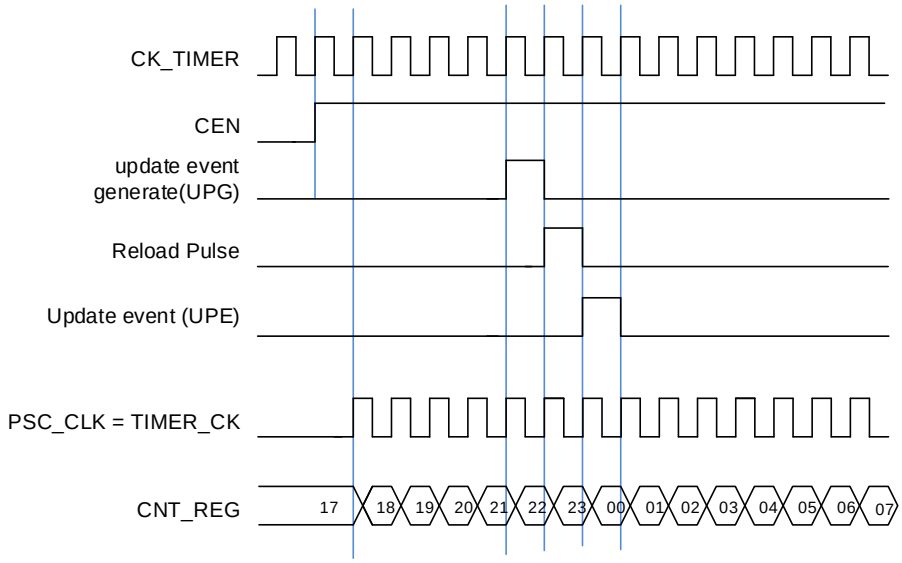

- TSCFG6[4:0] are setting to a nonzero value (external clock mode 0). External input pin is selected as timer clock source

The TIMER_CK, which drives counter's prescaler to count, can be triggered by the event of rising or falling edge on the external pin TIMERx_CH0/TIMERx_CH1. This mode can be selected by setting TSCFG6[4:0] to 0x5~0x7.

And, the counter prescaler can also be driven by rising edge on the internal trigger input pin ITI0/1/2/3. This mode can be selected by setting TSCFG6[4:0] to 0x1~0x4.

Clock prescaler

The prescaler can divide the timer clock (TIMER_CK) to a counter clock (PSC_CLK) by any factor between 1 and 65536. It is controlled by prescaler register (TIMERx_PSC) which can be changed on the go but is taken into account at the next update event.

Figure 24-83. Counter timing diagram with prescaler division change from 1 to 2

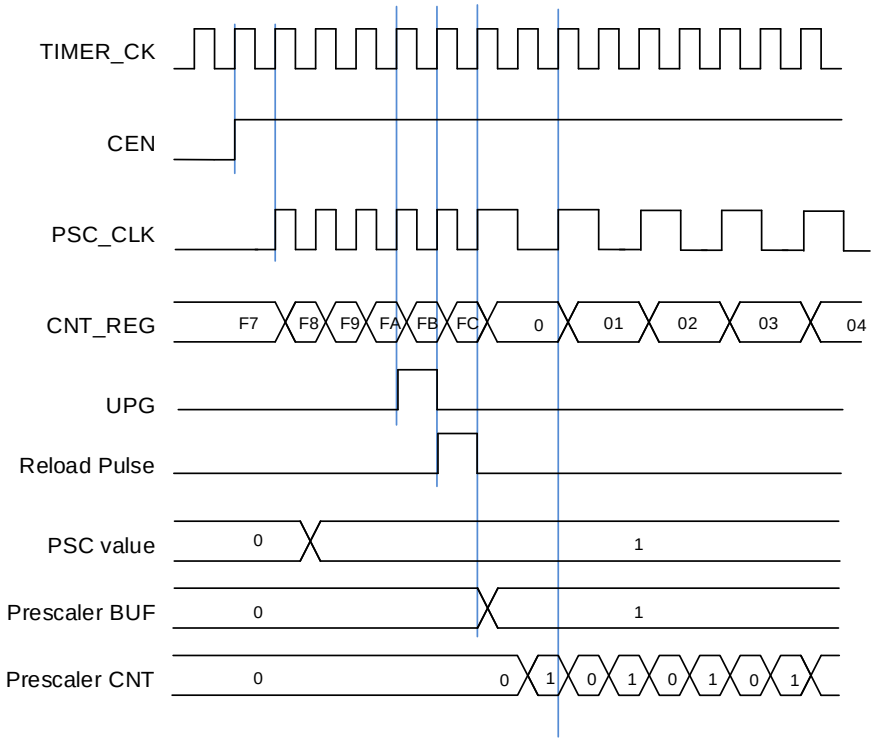

Up counting mode

In this mode, the counter counts up continuously from 0 to the counter-reload value, which is defined in the TIMERx_CAR register, in a count-up direction. Once the counter reaches the counter reload value, the counter restarts from 0. If the repetition counter is set, the update events will be generated after (TIMERx_CREP0/1+1) times of overflow. Otherwise the update event is generated each time when overflows. The counting direction bit DIR in the TIMERx_CTL0 register should be set to 0 for the up counting mode.

Whenever, if the update event software trigger is enabled by setting the UPG bit in the TIMERx_SWEVG register, the counter value will be initialized to 0 and generates an update event.

If set the UPDIS bit in TIMERx_CTL0 register, the update event is disabled.

When an update event occurs, all the registers (repetition counter, auto reload register, prescaler register) are updated.

Figure 24-84. Timing diagram of up counting mode, PSC=0/2 and ***Figure 24-85. Timing diagram of up counting mode, change TIMERx_CAR on the go*** show some examples of

the counter behavior for different clock prescaler factor when TIMERx_CAR=0x99.

Figure 24-84. Timing diagram of up counting mode, PSC=0/2

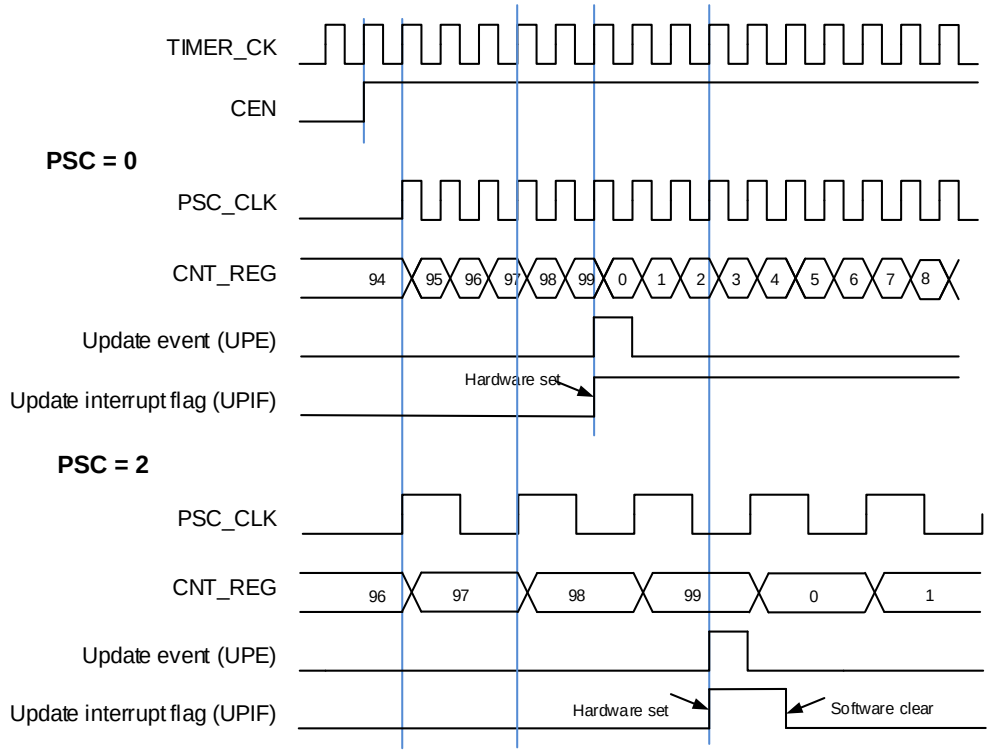

Figure 24-85. Timing diagram of up counting mode, change TIMERx_CAR on the go

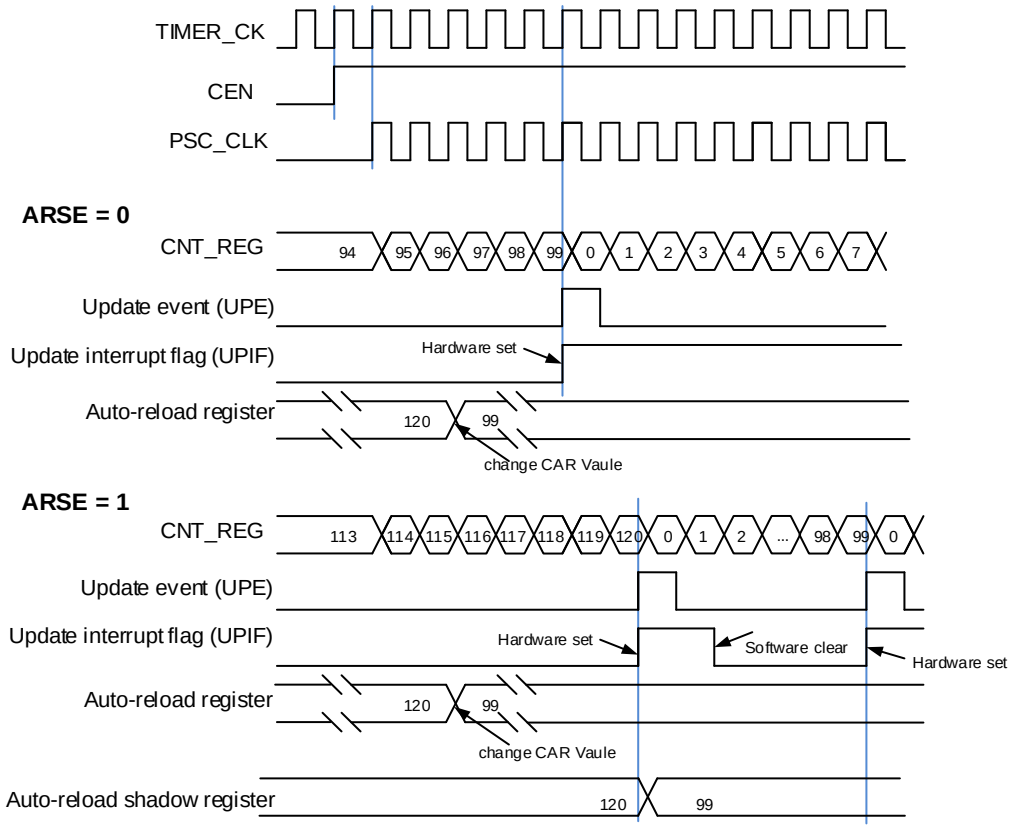

Counter repetition

The general timer has two repetitions counter TIMERx_CREP0/1, which can be selected by configuring the CPERSEL bit in the TIMERx_CFG register. The CPEP[7:0] bit-field is 8bits, the CPEP[31:0] bit-field is 32bits and can be read on the fly.

Counter repetition is used to generator update event or updates the timer registers only after a given number (N+1) of cycles of the counter, where N is CREP0/1 in TIMERx_CREP0/1 register. The repetition counter is decremented at each counter overflow in up-counting mode.

Setting the UPG bit in the TIMERx_SWEVG register will reload the content of CREP0/1 in TIMERx_CREP0/1 register and generator an update event.

Figure 24-86. Repetition timechart for up-counter

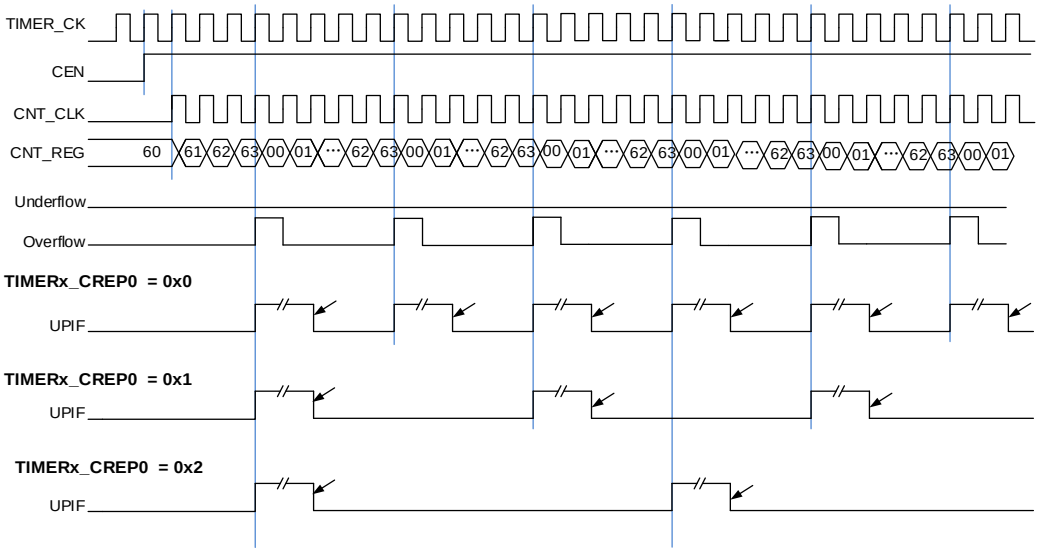

Capture/compare channels

The general level3 timer has three independent channels which can be used as capture inputs or compare match outputs. Each channel is built around a channel capture compare register including an input stage, channel controller and an output stage.

When the channels are used for input, channel 0 and multi mode channel 0 can perform input capture independently; when the channels are used for comparison output, the channel 0 and multi mode channel 0 can output independent and complementary outputs.

- **Input capture mode**

When MCHxMSEL=2’b00(independent mode), channel x and multi mode channel x can perform input capture independently.

Input capture mode allows the channel to perform measurements such as pulse timing, frequency, period, duty cycle and so on. The input stage consists of a digital filter, a channel polarity selection, edge detection and a channel prescaler. When a selected edge occurs on the channel input, the current value of the counter is captured into the TIMERx_CHxCV/

TIMERx_MCHxCV(x=0, 1) registers, at the same time the CHxIF/ MCHxIF(x=0, 1) bits are set and the channel interrupt is generated if it is enabled when CHxIE/ MCHxIE =1(x=0, 1).

Figure 24-87. Input capture logic for channel 0

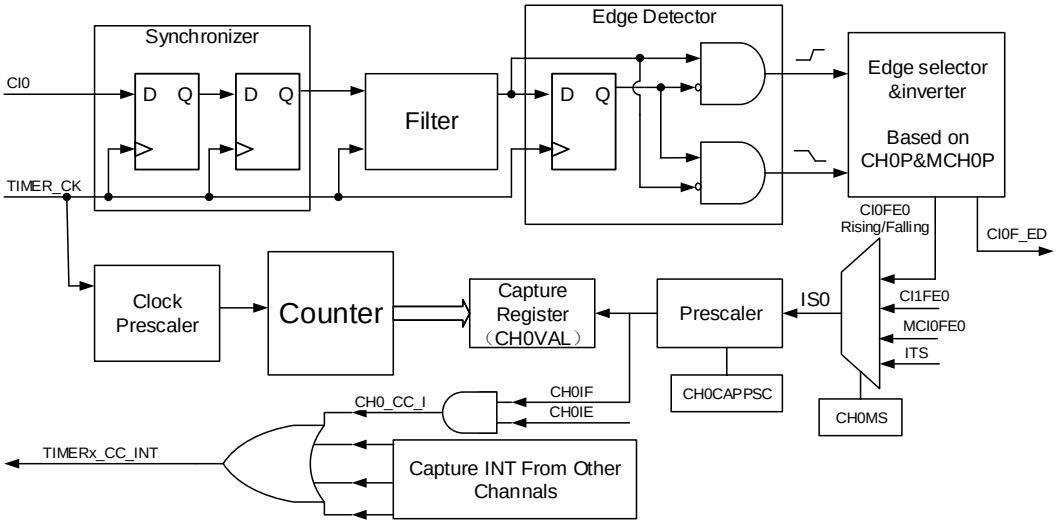

Figure 24-88. Input capture logic for multi mode channel 0

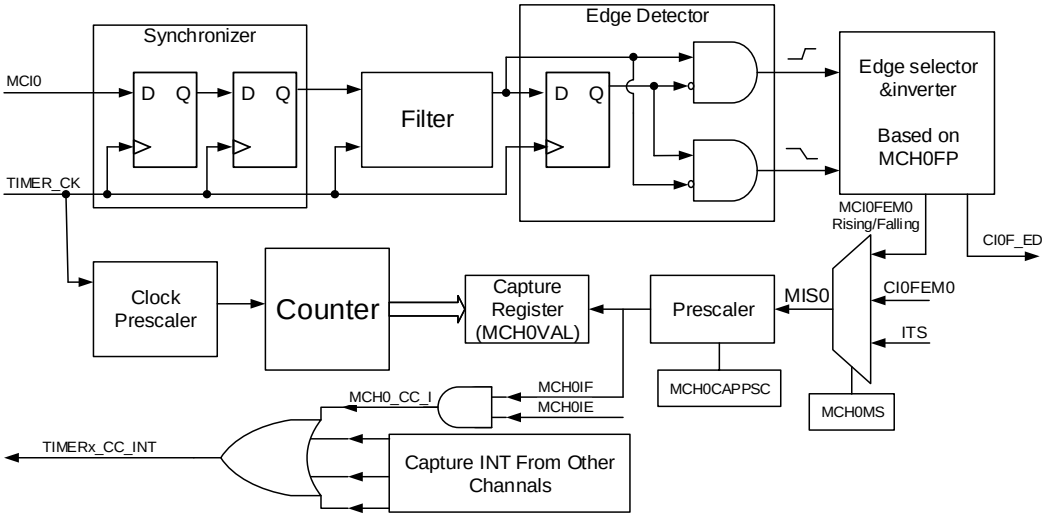

The input signals of channelx (CIx/ MCIx) are the TIMERx_CHx/ TIMERx_MCHxCV signal.

First, the input signal of channel (CIx/ MCIx) is synchronized to TIMER_CK signal, and then sampled by a digital filter to generate a filtered input signal. Then through the edge detector, the rising or falling edge is detected by configuring CHxP/ MCHxP or MCHxFP bits. The input capture signal can also be selected from the input signal of other channel or the internal trigger signal by configuring CHxMS/ MCHxMS bits. The IC prescaler makes several input events generate one effective capture event. On the capture event, TIMERx_CHxCV/ TIMERx_MCHxCV will store the value of counter.

So, the process can be divided into several steps as below:

Step1: Filter configuration (CHxCAPFLT bit in TIMERx_CHCTL0 register and MCHxCAPFLT bit in TIMERx_MCHCTL0 register).

Based on the input signal and quality of requested signal, configure compatible CHxCAPFLT or MCHxCAPFLT bit.

Step2: Edge selection (CHxP and MCHxP bits in TIMERx_CHCTL2 register, MCHxFP[1:0] bits in TIMERx_MCHCTL2 register).

Rising edge or falling edge, choose one by configuring CHxP and MCHxP bits or MCHxFP[1:0] bits.

Step3: Capture source selection (CHxMS bit in TIMERx_CHCTL0 register, MCHxMS bit in TIMERx_MCHCTL0 register).

As soon as selecting one input capture source by CHxMS, the channel must be set to input mode (CHxMS! =0x000 or MCHxMS != 0x000) and TIMERx_CHxCV/ TIMERx_MCHxCV cannot be written any more.

Step4: Interrupt enable (CHxIE and CHxDEN bits, MCHxIE and MCHxDEN bits in TIMERx_DMAINTEN).

Enable the related interrupt to get the interrupt and DMA request.

Step5: Capture enable (CHxEN and MCHxEN bits in TIMERx_CHCTL2).

Result: When the wanted input signal is captured, TIMERx_CHxCV/ TIMERx_MCHxCV will be set by counter's value and CHxIF/ MCHxIF bit is asserted. If the CHxIF/ MCHxIF bit is 1, the CHxOF/ MCHxOF bit will also be asserted. The interrupt and DMA request will be asserted or not based on the configuration of CHxIE and CHxDEN bits, MCHxIE and MCHxDEN bits in TIMERx_DMAINTEN.

Direct generation: A DMA request or interrupt is generated by setting CHxG directly.

The input capture mode can be also used for pulse width measurement from signals on the TIMERx_CHx and TIMERx_MCHx pins. For example, PWM signal connects to CI0 input. Select CI0 as channel 0 capture signals by setting CH0MS to 3'b001 in the channel control register (TIMERx_CHCTL0) and set capture on rising edge. Select CI0 as channel 1 capture signal by setting CH1MS to 3'b010 in the channel control register (TIMERx_CHCTL0) and set capture on falling edge. The counter is set to restart mode and is restarted on channel 0 rising edge. Then the TIMERX_CH0CV can measure the PWM period and the TIMERx_CH1CV can measure the PWM duty cycle.

■ Output compare mode

Figure 24-89. Output compare logic (when MCHxMSEL = 2'00, x=0), ***Figure 24-90. Output compare logic (when MCHxMSEL = 2'11, x=0)*** and ***Figure 24-91. Output compare logic (x=1)*** show the logic circuit of output compare mode.

Figure 24-89. Output compare logic (when MCHxMSEL = 2'00, x=0)

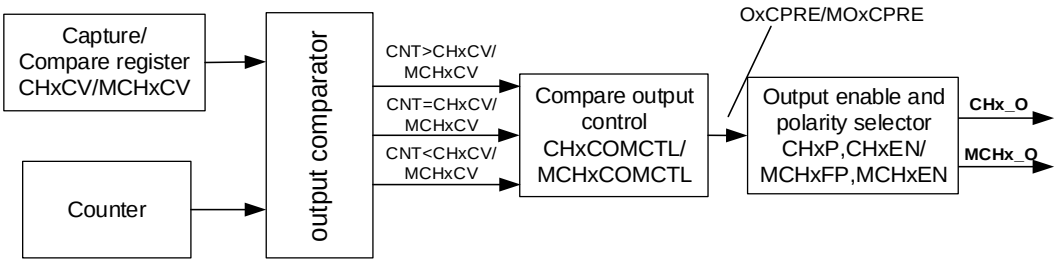

Figure 24-90. Output compare logic (when MCHxMSEL = 2'11, x=0)

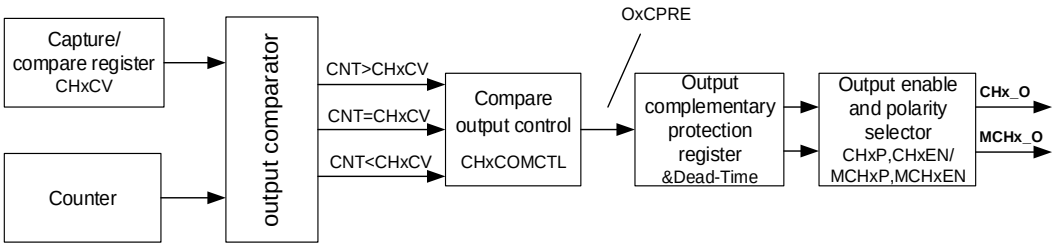

Figure 24-91. Output compare logic (x=1)

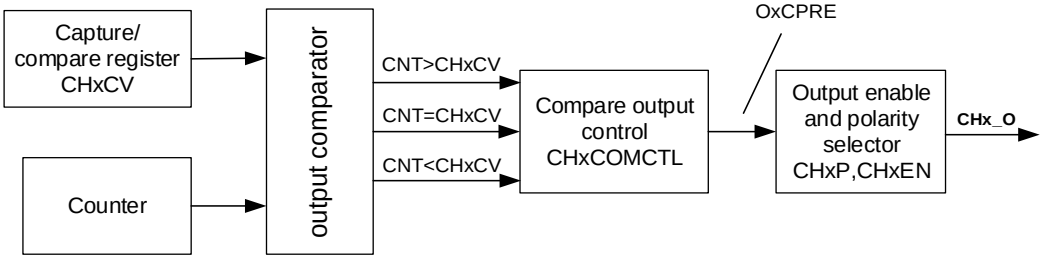

The relationship between the channel output signal CHx_O/MCHx_O and the OxCPRE/ MOxCPRE signal (more details refer to ***Channel output prepare signal***) is described as blew(the active level of OxCPRE is high and the active level of MOxCPRE is high).

- When MCHxMSEL=2'b00 (in TIMERx_CTL2 register), the MCHx_O output is independent from the CHx_O output. The output level of CHx_O depends on OxCPRE signal, CHxP bit and CHxEN bit (please refer to the TIMERx_CHCTL2 register for more details). The output level of MCHx_O depends on MOxCPRE signal, MCHxFP[1:0] bits and MCHxEN bit (please refer to the TIMERx_MCHCTL2 and TIMERx_CHCTL2 registers for more details). Please refer to ***Figure 24-89. Output compare logic (when MCHxMSEL = 2'00, x=0)***.
- When MCHxMSEL=2'b11, the MCHx_O output is the inverse of the CHx_O output. The output level of CHx_O/MCHx_O depends on OxCPRE signal, CHxP/ MCHxP bits and

CHxEN/MCHxEN bits. Please refer to ***Figure 24-90. Output compare logic (when MCHxMSEL = 2'11, x=0)***.

For examples (the MCHx_O output is independent from the CHx_O output):

3) Configure CHxP=0 (the active level of CHx_O is high, the same as OxCPRE), CHxEN=1 (the output of CHx_O is enabled):
   If the output of OxCPRE is active(high) level, the output of CHx_O is active(high) level;
   If the output of OxCPRE is inactive(low) level, the output of CHx_O is active(low) level.

4) Configure MCHxP=1 (the active level of MCHx_O is low, contrary to MOxCPRE), MCHxEN=1 (the output of MCHx_O is enabled):
   If the output of MOxCPRE is active(high) level, the output of MCHx_O is active(low) level;
   If the output of MOxCPRE is inactive(low) level, the output of MCHx_O is active(high) level.

When MCHxMSEL=2'b11 and CHx_O and MCHx_O are output at the same time, the specific outputs of CHx_O and MCHx_O are related to the relevant bits (ROS, IOS, POE and DTCFG bits) in the TIMERx_CCHP register. Please refer to ***Outputs complementary*** for more details.

In output compare mode, the TIMERx can generate timed pulses with programmable position, polarity, duration and frequency. When the counter matches the value in the TIMERx_CHxCV/ TIMERx_MCHxCV register of an output compare channel, the channel (n) output can be set, cleared, or toggled based on CHxCOMCTL/ MCHxCOMCTL. When the counter reaches the value in the TIMERx_CHxCV/ TIMERx_MCHxCV register, the CHxIF/ MCHxIF bit will be set and the channel (n) interrupt is generated if CHxIE/ MCHxIE = 1. And the DMA request will be asserted, if CHxDEN/ MCHxDEN =1.

So, the process can be divided into several steps as below:

Step1: Clock Configuration. Such as clock source, clock prescaler and so on.
Step2: Compare mode configuration.
- Set the shadow enable mode by CHxCOMSEN/ MCHxCOMSEN.
- Set the output mode (set/clear/toggle) by CHxCOMCTL/ MCHxCOMCTL.
- Select the active polarity by CHxP/MCHxP/ MCHxFP.
- Enable the output by CHxEN/ MCHxEN.

Step3: Interrupt/DMA request enable configuration by CHxIE/ MCHxIE /CHxDEN/ MCHxDEN.
Step4: Compare output timing configuration by TIMERx_CAR and TIMERx_CHxCV/ TIMERx_MCHxCV.
The TIMERx_CHxCV/ TIMERx_MCHxCV can be changed onging to meet the expected waveform.
Step5: Start the counter by configuring CEN to 1.

Figure 24-92. Output-compare in three modes shows the three compare modes: toggle/set/clear. CARL=0x63, CHxVAL=0x3.

Figure 24-92. Output-compare in three modes

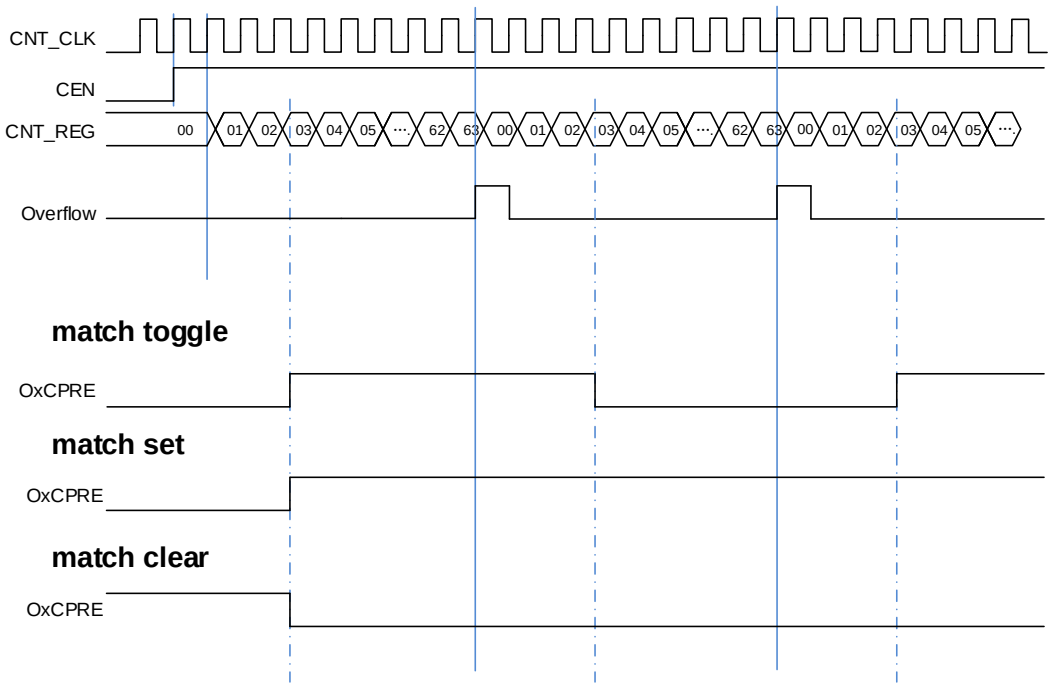

PWM mode

In the PWM output mode (by setting the CHxCOMCTL/ MCHxCOMCTL bit to 4'b0110 (PWM mode 0) or to 4'b0111(PWM mode 1)), the channel can generate PWM waveform according to the TIMERx_CAR registers and TIMERx_CHxCV/ TIMERx_MCHxCV registers.

The EAPWM's period is determined by TIMERx_CAR and the duty cycle is determined by TIMERx_CHxCV/ TIMERx_MCHxCV. ***Figure 24-93. PWM mode timechart*** shows the EAPWM output and interrupts waveform.

In up counting mode, if the value of TIMERx_CHxCV/ TIMERx_MCHxCV is greater than the value of TIMERx_CAR, the output will be always active in PWM mode 0 (CHxCOMCTL/ MCHxCOMCTL =4'b0110). And if the value of TIMERx_CHxCV/ TIMERx_MCHxCV is greater than the value of TIMERx_CAR, the output will be always inactive in PWM mode 1 (CHxCOMCTL/ MCHxCOMCTL =4'b0111).

Figure 24-93. PWM mode timechart

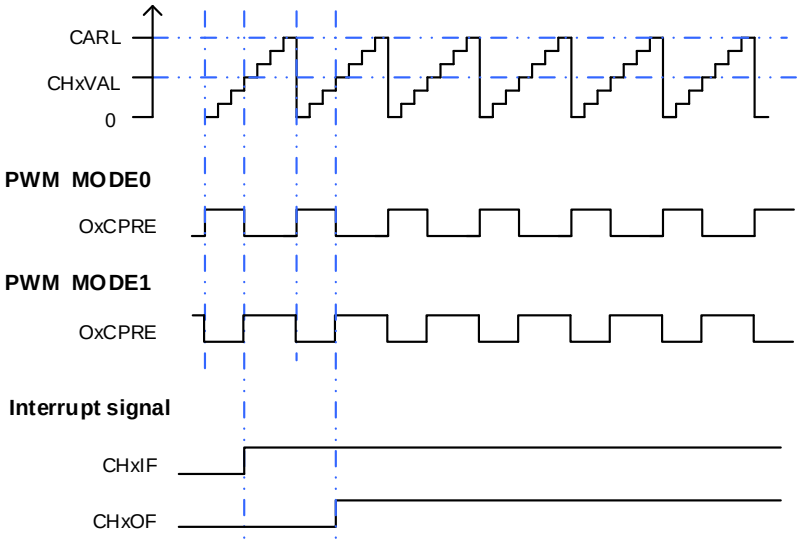

Composite PWM mode

In the Composite PWM mode (CHxCPWMEN = 1'b1, CHxMS[2:0] = 3'b000 and CHxCOMCTL = 4'b0110 or 4'b0111), the PWM signal output in channel x (x=0, 1) is composited by CHxVAL and CHxCOMVAL_ADD bits.

If CHxCOMCTL = 4'b0110 (PWM mode 0) and DIR = 1'b0 (up counting mode), the channel x output is forced low when the counter matches the value of CHxVAL. It is forced high when the counter matches the value of CHxCOMVAL_ADD.

If CHxCOMCTL = 4'b0111 (PWM mode 1) and DIR = 1'b0 (up counting mode), the channel x output is forced high when the counter matches the value of CHxVAL. It is forced low when the counter matches the value of CHxCOMVAL_ADD.

The PWM period is determined by (CARL + 0x0001) and the PWM pulse width is determined by the following table.

Table 24-14.The Composite PWM pulse width

Condition	Mode	PWM pulse width
CHxVAL < CHxCOMVAL_ADD ≤ CARL	PWM mode 0	(CARL + 0x0001) + (CHxVAL – CHxCOMVAL_ADD)
	PWM mode 1	(CHxCOMVAL_ADD – CHxVAL)
CHxCOMVAL_ADD < CHxVAL ≤ CARL	PWM mode 0	(CHxVAL - CHxCOMVAL_ADD)
	PWM mode 1	(CARL + 0x0001) + (CHxCOMVAL_ADD – CHxVAL)
(CHxVAL = CHxCOMVAL_ADD ≤ CARL) or (CHxVAL > CARL > CHxCOMVAL_ADD)	PWM mode 0 (up counting) or PWM mode 1 (down counting)	100%
	PWM mode 0 (down counting) or PWM mode 1 (up counting)	0%
CHxCOMVAL_ADD > CARL > CHxVAL	PWM mode 0(up counting) or PWM mode 1(down counting)	0%
	PWM mode 0(down counting) or PWM mode 1(up counting)	100%
(CHxVAL>CARL) and (CHxCOMVAL_ADD > CARL)	-	The output of CHx_O is keeping

When the counter reaches the value of CHxVAL, the CHxIF bit is set and the channel x interrupt is generated if CHxIE = 1, and the DMA request will be asserted, if CHxDEN=1. When the counter reaches the value of CHxCOMVAL_ADD, the CHxCOMADDIF bit is set (this flag just used in composite PWM mode, when CHxCPWMEN=1) and the channel x additional compare interrupt is generated if CHxCOMADDIE = 1 (Only interrupt is generated, no DMA request is generated).

According to the relationship among CHxVAL, CHxCOMVAL_ADD and CARL, it can be divided into four situations:

1) CHxVAL < CHxCOMVAL_ADD, and the values of CHxVAL and CHxCOMVAL_ADD between 0 and CARL.

Figure 24-94. Channel x output PWM with (CHxVAL < CHxCOMVAL_ADD)

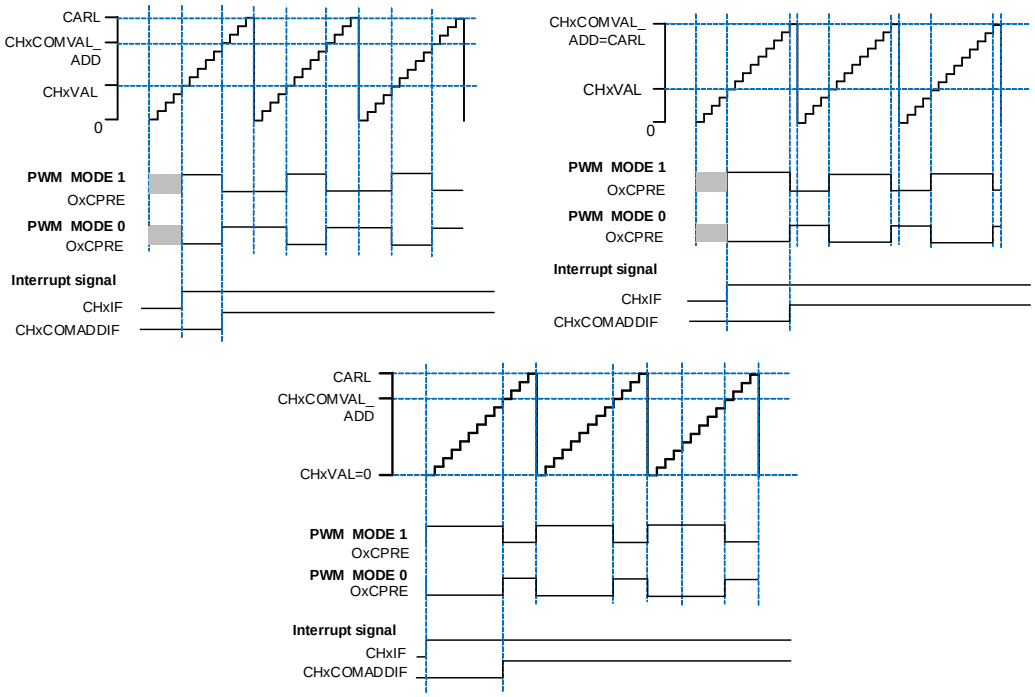

2) CHxVAL = CHxCOMVAL_ADD, and the value of CHxVAL and CHxCOMVAL_ADD between 0 and CARL.

Figure 24-95. Channel x output PWM with (CHxVAL = CHxCOMVAL_ADD)

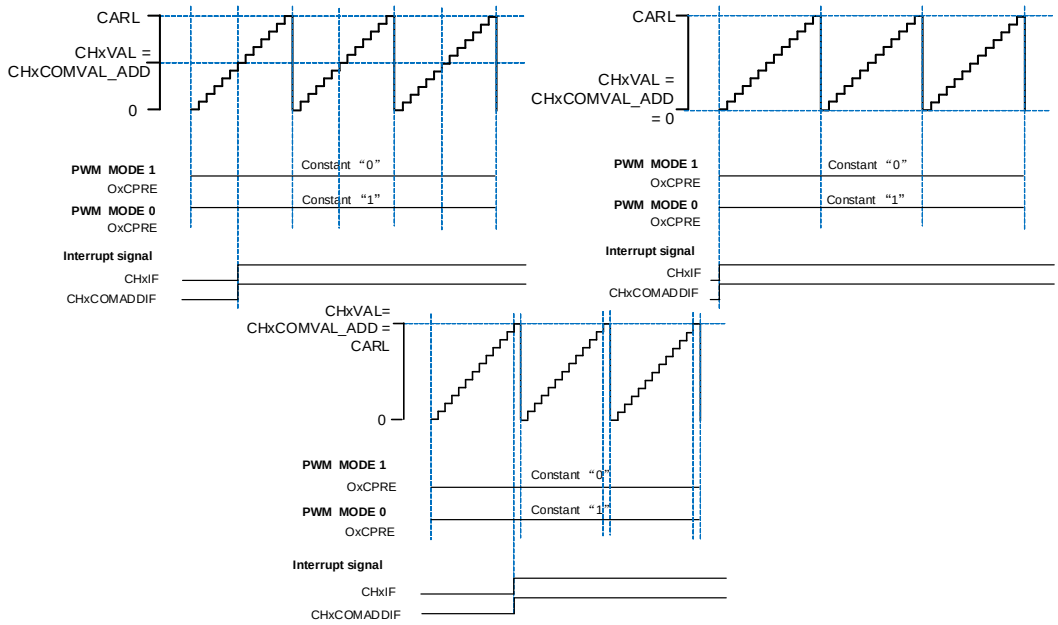

3) CHxVAL > CHxCOMVAL_ADD, and the value of CHxVAL and CHxCOMVAL_ADD between 0 and CARL.

Figure 24-96. Channel x output PWM with (CHxVAL > CHxCOMVAL_ADD)

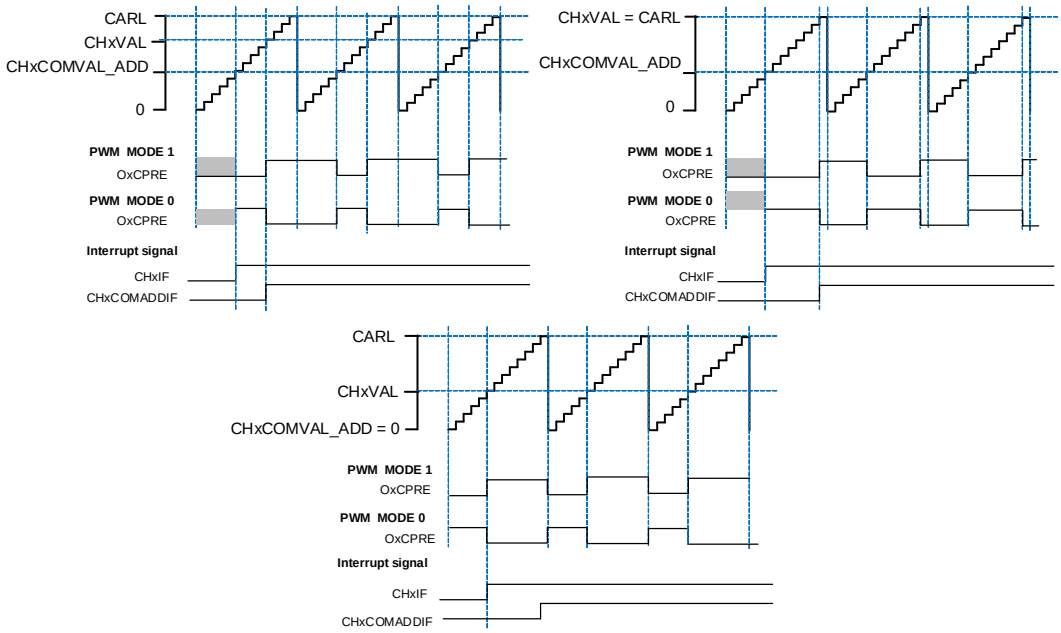

4) One of the value of CHxVAL and CHxCOMVAL_ADD exceeds CARL.

Figure 24-97. Channel x output PWM with CHxVAL or CHxCOMVAL_ADD exceeds CARL

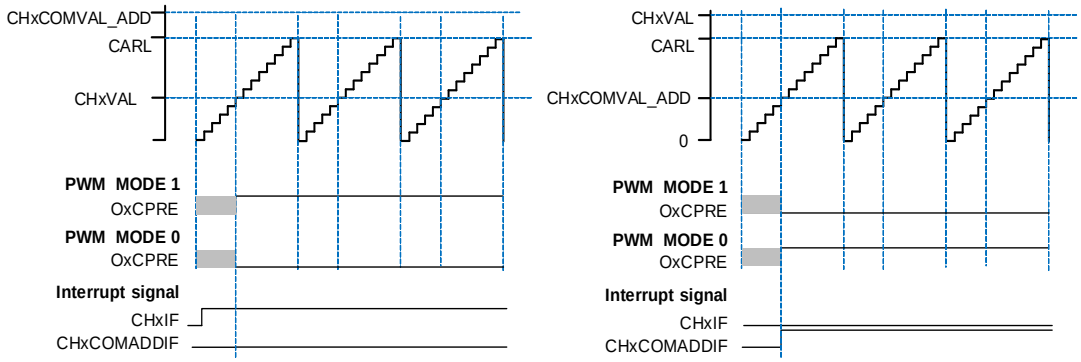

The composite PWM mode is intended to support the generation of PWM signals where the period is not modified while the signal is being generated, but the duty cycle will be varied. *Figure 24-98. Channel x output PWM duty cycle changing with CHxCOMVAL_ADD* shows the PWM output and interrupts waveform.

In some cases, the CHxCOMVAL_ADD match can happen on the next counter period (the value of CHxCOMVAL_ADD was written after the counter reaches the value of CHxVAL, and the value of CHxCOMVAL_ADD was less than or equal to the CHxVAL).

Figure 24-98. Channel x output PWM duty cycle changing with CHxCOMVAL_ADD

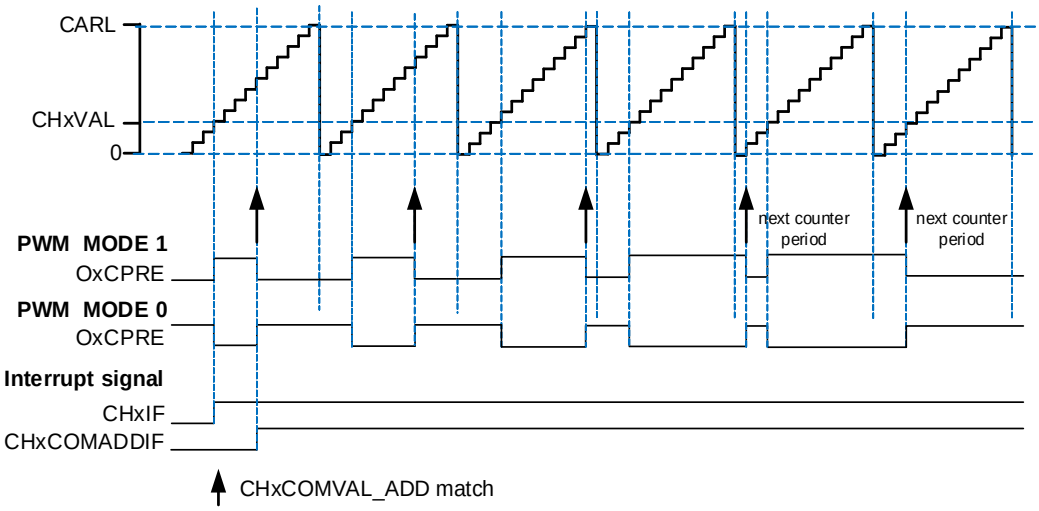

If more than one channels are configured in composite PWM mode, it is possible to fix an offset for the channel x match edge of each pair with respect to other channels. This behavior is useful in the generation of lighting PWM control signals where it is desirable that edges are not coincident with each other pair to help eliminate noise generation. The CHxVAL register value is the shift of the PWM pulse with respect to the beginning of counter period.

Output match pulse select

Basing on that CHx_O (x=0, 1) outputs are configured by CHxCOMCTL[3:0](x=0, 1) bits when the match events occur, the output signal is configured by CHxOMPSEL[1:0](x=0, 1) bits to be normal or a pulse.

When the match events occur, the CHxOMPSEL[1:0](x=0, 1) bits are used to select the output of OxCPRE which drives CHx_O:

- CHxOMPSEL = 2’b00, the OxCPRE signal is output normally with the configuration of CHxCOMCTL[3:0] bits;
- CHxOMPSEL = 2’b01, only the counter is counting up, the OxCPRE signal is output a pulse when the match events occur, and the pulse width is one CK_TIMER clock cycle.

Figure 24-99. CHx_O output with a pulse in edge-aligned mode (CHxOMPSEL =2’b00)

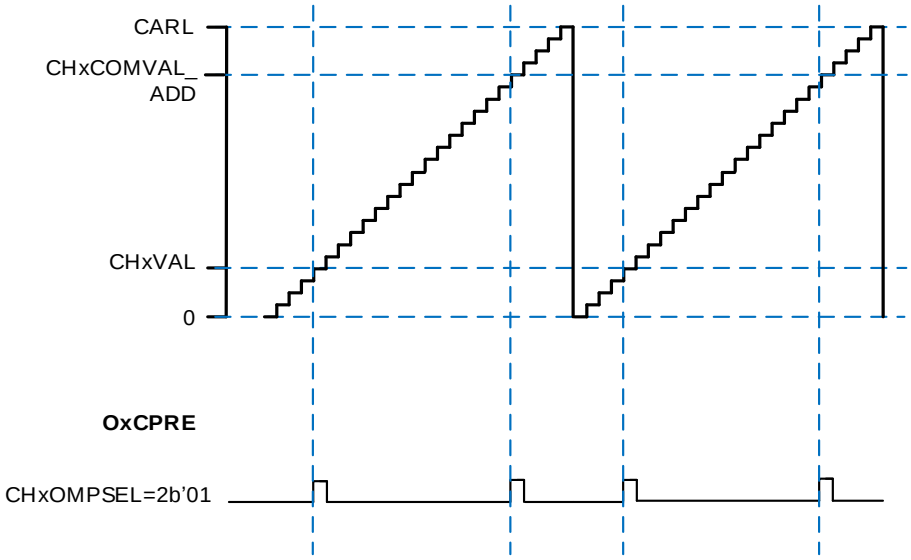

Channel output prepare signal

As is shown in ***Figure 24-89. Output compare logic (when MCHxMSEL = 2'00, x=0)***, ***Figure 24-90. Output compare logic (when MCHxMSEL = 2'11, x=0)*** and ***Figure 24-91. Output compare logic (x=1)***, when TIMERx is configured in compare match output mode, a middle signal named OxCPRE or MOxCPRE (channel x output or multi mode channel x output prepare signal) will be generated before the channel outputs signal.

The OxCPRE and MOxCPRE signal have several types of output function. The OxCPRE signal type is defined by configuring the CHxCOMCTL bit and the MOxCPRE signal type is defined by configuring the MCHxCOMCTL bit.

Take OxCPRE as an example for description below, these include keeping the original level by configuring the CHxCOMCTL field to 0x00, setting to high by configuring the CHxCOMCTL field to 0x01, setting to low by configuring the CHxCOMCTL field to 0x02 or toggling signal by configuring the CHxCOMCTL field to 0x03 when the counter value matches the content of the TIMERx_CHxCV register.

The PWM mode 0/ PWM mode 1 output is another output type of OxCPRE which is setup by configuring the CHxCOMCTL field to 0x06/0x07. In these modes, the OxCPRE signal level is changed according to the counting direction and the relationship between the counter value and the TIMERx_CHxCV content. Refer to the definition of relative bit for more details.

Another special function of the OxCPRE signal is forced output which can be achieved by configuring the CHxCOMCTL field to 0x04/ 0x05. The output can be forced to an inactive/active level irrespective of the comparison condition between the values of the counter and the TIMERx_CHxCV.

Configure the CHxCOMCEN bit to 1 in the TIMERx_CHCTL0 register, the OxCPRE signal can be forced to 0 when the ETIFP signal derived from the external ETI pin is set to a high level. The OxCPRE signal will not return to its active level until the next update event occurs.

Outputs complementary

The outputs of CHx_O and MCHx_O have two situations:

- MCHxMSEL=2'b00: The MCHx_O output is independent from the CHx_O output;
- MCHxMSEL=2'b11: The outputs of MCHx_O and CHx_O are complementary and the MCHxOMCTL bits are not used in the generation of the MCHx_O output.

Function of complementary is for a pair of channels, CHx_O and MCHx_O, the two output signals cannot be active at the same time. TIMERx's one pair of channel has this function. The complementary signals CHx_O and MCHx_O are controlled by a group of parameters: the CHxEN and MCHxEN bits in the TIMERx_CHCTL2 register, the POEN, ROS and IOS bits in the TIMERx_CCHP register, ISOx and ISOxN bits in the TIMERx_CTL1 register. The output polarity is determined by CHxP and MCHxP bits in the TIMERx_CHCTL2 register.

When the the outputs of CHx_O and MCHx_O are complementary, there are three situations: output enable、output off-state and output disabled. The details are shown in ***Table 24-15. Complementary outputs controlled by parameters (MCHxMSEL =2'b11)***.

Table 24-15. Complementary outputs controlled by parameters (MCHxMSEL =2'b11)

<table>
<tr><th colspan="5">Complementary Parameters</th><th colspan="2">Output Status</th></tr>
<tr><th>POEN</th><th>ROS</th><th>IOS</th><th>CHxEN</th><th>MCHxEN</th><th>CHx_O</th><th>MCHx_O</th></tr>
<tr><td rowspan="4">0</td><td rowspan="4">0/1</td><td rowspan="3">0</td><td rowspan="2">0</td><td>0</td><td colspan="2">CHx_O / CHx_ON = LOW
CHx_O / CHx_ON output disable(1).</td></tr>
<tr><td>1</td><td colspan="2" rowspan="3">CHx_O/ CHx_ON output "off-state" (2):
the CHx_O/ CHx_ON output inactive level firstly: CHx_O = CHxP, CHx_ON = CHxNP; If the clock for deadtime generator is present, after a deadtime: CHx_O = ISOx, CHx_ON = ISOxN. (3)</td></tr>
<tr><td rowspan="2">1</td><td>0</td></tr>
<tr><td>1</td></tr>
<tr><td>1</td><td>x</td><td>x</td><td colspan="2">CHx_O/ CHx_ON output "off-state":
the CHx_O/ CHx_ON output inactive level firstly: CHx_O = CHxP, CHx_ON = CHxNP; If the clock for deadtime generator is present, after a deadtime: CHx_O = ISOx, CHx_ON = ISOxN.</td></tr>
<tr><td rowspan="8">1</td><td rowspan="4">0</td><td rowspan="6">0/1</td><td rowspan="2">0</td><td>0</td><td colspan="2">CHx_O/MCHx_O = LOW
CHx_O/MCHx_O output disable.</td></tr>
<tr><td>1</td><td>CHx_O = LOW
CHx_O output disable.</td><td>MCHx_O=OxCPRE⊕(4)MCHxP
MCHx_O output enable.</td></tr>
<tr><td rowspan="2">1</td><td>0</td><td>CHx_O=OxCPRE⊕CHxP
CHx_O output enable.</td><td>MCHx_O = LOW
MCHx_O output disable.</td></tr>
<tr><td>1</td><td>CHx_O=OxCPRE⊕CHxP
CHx_O output enable.</td><td>MCHx_O = (! OxCPRE)(5)⊕ MCHxP.
MCHx_O output enable.</td></tr>
<tr><td rowspan="4">1</td><td rowspan="2">0</td><td>0</td><td>CHx_O = CHxP
CHx_O output "off-state".</td><td>MCHx_O = MCHxP
MCHx_O output "off-state".</td></tr>
<tr><td>1</td><td>CHx_O = CHxP
CHx_O output "off-state"</td><td>MCHx_O=OxCPRE⊕MCHxP
MCHx_O output enable</td></tr>
<tr><td rowspan="2">1</td><td>0</td><td>CHx_O=OxCPRE⊕CHxP
CHx_O output enable</td><td>MCHx_O = MCHxP
MCHx_O output "off-state".</td></tr>
<tr><td>1</td><td>CHx_O=OxCPRE⊕CHxP
CHx_O output enable</td><td>MCHx_O = (! OxCPRE)⊕ MCHxP
MCHx_O output enable.</td></tr>
</table>

Note:

(1) output disable: the CHx_O / CHx_ON are disconnected to corresponding pins, the pin is floating with GPIO pull up/down setting which will be Hi-Z if no pull.

(2) "off-state": CHx_O / CHx_ON output with inactive state (e.g., CHx_O = 0⊕CHxP = CHxP).

(3) See Break mode section for more details.

(4) ⊕: Xor calculate.

(5) (! OxCPRE)：the complementary output of the OxCPRE signal.

Dead time insertion

The dead time insertion is enabled when MCHxMSEL=2'b11 and both CHxEN and MCHxEN are configured to 1'b1, it is also necessary to configure POEN to 1. The field named DTCFG defines the dead time delay that can be used for all channels. Refer to the ***Complementary channel protection register (TIMERx_CCHP)*** for details about the delay time.

The dead time delay insertion ensures that two complementary signals are not active at the same time.

When the channel x match event (TIMERx_CNT = CHxVAL) occurs, OxCPRE will be toggled in PWM mode 0. At point A in ***Figure 24-100. Complementary output with dead-time insertion***, CHx_O signal remains at the low level until the end of the dead time delay, while MCHx_O signal will be cleared at once. Similarly, at point B when the channelx match event (TIMERx_CNT = CHxVAL) occurs again, OxCPRE is cleared, and CHx_O signal will be cleared at once, while MCHx_O signal remains at the low level until the end of the dead time delay.

Sometimes, we can see corner cases about the dead time insertion. For example: the dead time delay is greater than or equal to the duty cycle of the CHx_O signal, then the CHx_O signal is always inactive (As shown in ***Figure 24-100. Complementary output with dead-time insertion***).

Figure 24-100. Complementary output with dead-time insertion

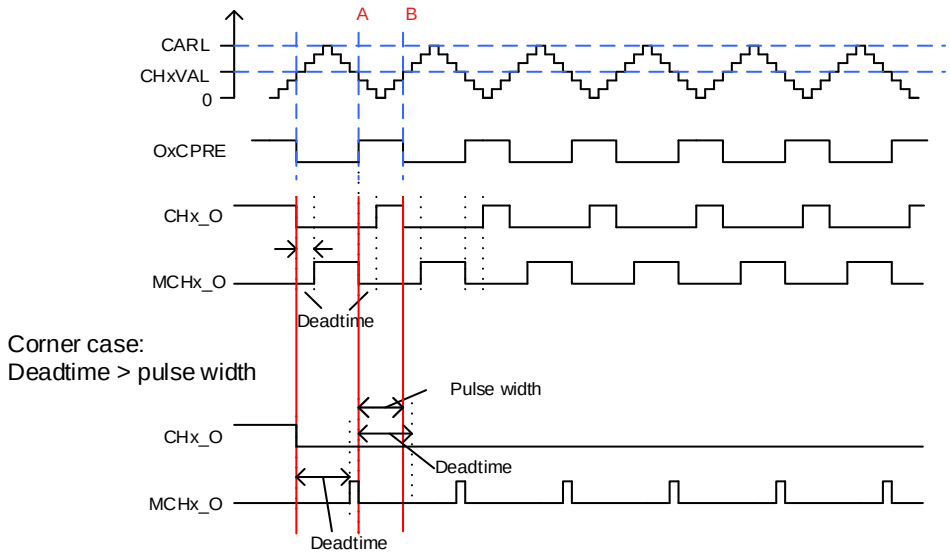

Break function

The MCHx_O output is the inverse of the CHx_O output when the MCHxMSEL=2'b11 (and the MCHxOMCTL bits are not used in the generation of the MCHx_O output). In this case, CHx_O and MCHx_O signals cannot be set to active level at the same time.

The general level3 timers have the BREAK0 function. The BREAK0 function can be enabled by setting the BRK0EN bit in the TIMERx_CCHP register. The break input polarity is

configured by the BRK0P bit in TIMERx_CCHP register, the input is active on level.

In BREAK0 function, CHx_O and MCHx_O are controlled by the POEN, OAEN, IOS and ROS bits in the TIMERx_CCHP register, ISOx and ISOxN bits in the TIMERx_CTL1 register.

The break event is the result of logic ORed of all sources. The BREAK0 function can handle three types of event sources:

- External sources: coming from BRKIN0 input;
- System sources: HXTAL stuck event which is generated by Clock Monitor CKM in RCU, LVD lock event, Cortex®-M7 LOCKUP_LOCK event or SRAM parity error event;
- On-chip peripheral events: input by comparator output or HPDF watchdog output.

BREAK0 events can also be generated by software using BRK0G bit in the TIMERx_SWEVG register.

Refer to ***Figure 24-101. BREAK0 function logic diagram***, BRKIN0 can select GPIO pins from the TRIGSEL module, which can select by ***Trigger selection for TIMER14_BRKIN register (TRIGSEL_TIMER14BRKIN)***.

Figure 24-101. BREAK0 function logic diagram

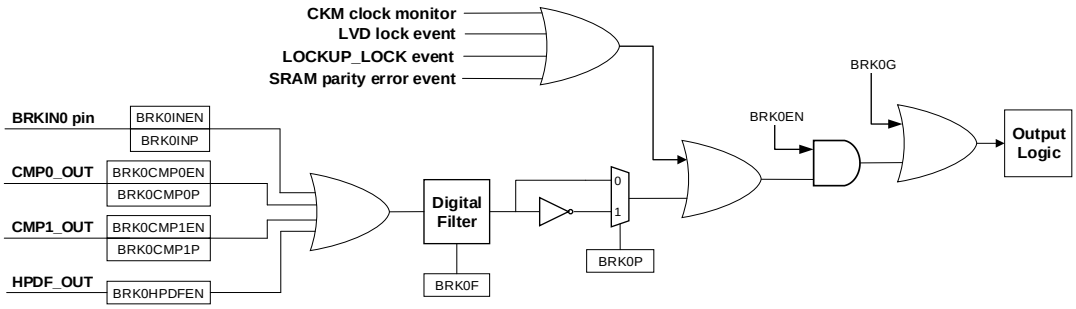

When a BREAK0 event occurs, the outputs are force at an inactive level, or at a predefined level (either active or inactive) after a deadtime duration.

When the MCHxMSEL = 2'b11 and a break occurs, the POEN bit is cleared asynchronously. As soon as POEN is 0, the level of the CHx_O and MCHx_O outputs are determined by the ISOx and ISOxN bits in the TIMERx_CTL1 register. If IOS = 0, the timer releases the enable output, otherwise, the enable output remains high. When IOS=1, the output behavior of the channel is shown in ***Figure 24-102. Output behavior of the channel in response to BREAK0 (the break input high active and IOS=1)***. The complementary outputs are first in the reset state, and then the dead time generator is reactivated to drive the outputs with the level programmed in the ISOx and ISOxN bits after a dead time.

Figure 24-102. Output behavior of the channel in response to BREAK0 (the break input

high active and IOS=1)

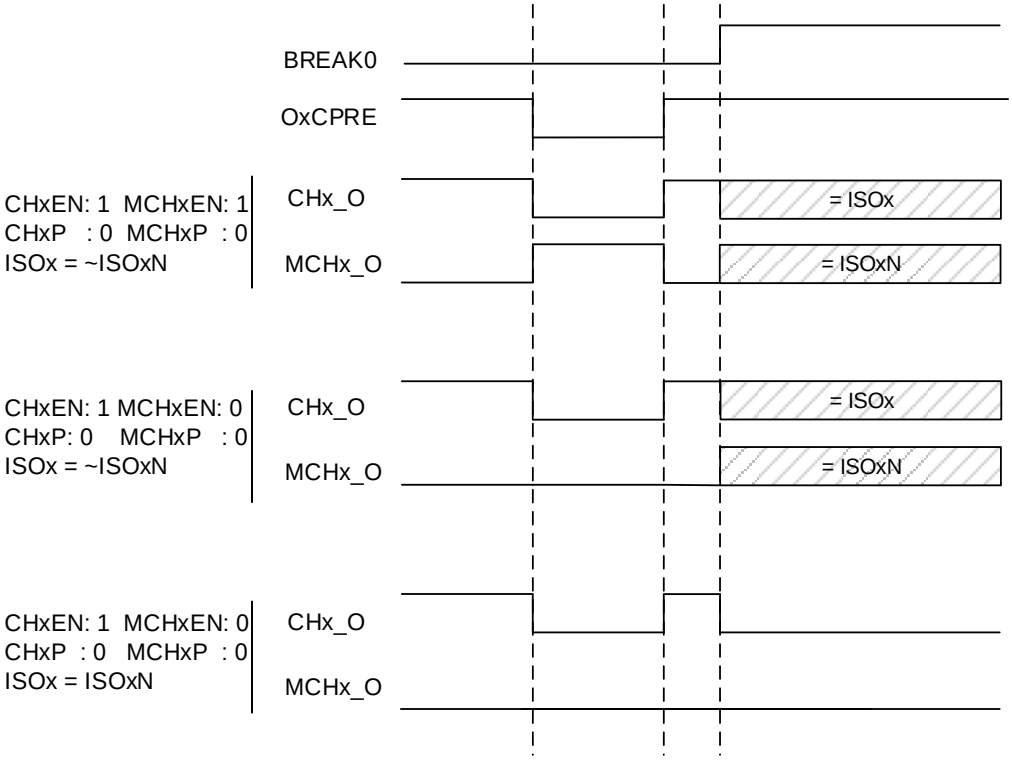

When a break occurs, the BRKIF bit in the TIMERx_INTF register will be set. If BRKIE is 1, an interrupt will be generated.

Locked break function

The BRKIN0 input pin of general timer have the locked break function, this function can be enabled by setting the BRK0LK bit in the TIMERx_CCHP register.

When the locked break function is enabled, the BRKIN0 pins need to be configured to open-drain output mode with low level active (BRK0P=0 and BRK0IN0P=0). When any break source requests occur, the BRKIN0 pin can be forced to low level. If the break input polarity is active high (BRK0P=1 and BRK0IN0P =1), the locked break function is invalid.

When the break function is enabled (the BRK0EN =1), the BRKIN0 pin can be forced to low level with the BRK0G bit setting to 1 by software.

When the break function is disabled (the BRK0EN =0), setting the BRK0G bit will have no effect on the BRKIN0 pin. The BRK0F bit will set and the channel outputs will be in a safe state.

The BRKIN0 pin can be released by setting the BRK0REL bit in the TIMERx_CCHP register. When the break input sources are inactive, the BRK0REL bit will cleared by hardware and the BRKIN0 pin will restore the locked break function.

In the following two cases, the BRKIN0 pin cannot be released:

- Break input sources are active: the BRK0REL bit is set to 1 and the BRKIN0 pin locked

break function is released. The break events are still active, because the break input sources are still active.

- POEN=1: when the channel outputs are enabled, the BRKIN0 pin cannot be released even if the BRK0REL is set.

Table 24-16. Break function input pins locked/ released conditions

POEN	BRK0LK	BRK0REL	Break input pin state
0	1	0	Locked
	1	1	Released

The locked break function of the BREAK0 input pin BRKIN0 is enabled by default (BRK0REL=0). When the BREAK0 events occur, the following steps can be used to reconfigure the locked break function:

- Set the BRK0REL bit to 1 and released the BRKIN0 pin;
- The software waits for the system break sources inactive, and then clears the SYSBIF flag;
- The software polls the state of BRK0REL bit, until the BRK0REL bit is cleared (cleared by hardware).

Then the locked break function of BREAK0 input pin is re-enabled, and the channel outputs can be restored by setting the POEN bit to 1 by software.

Figure 24-103. BRKIN0 pin logic with BREAK0 function

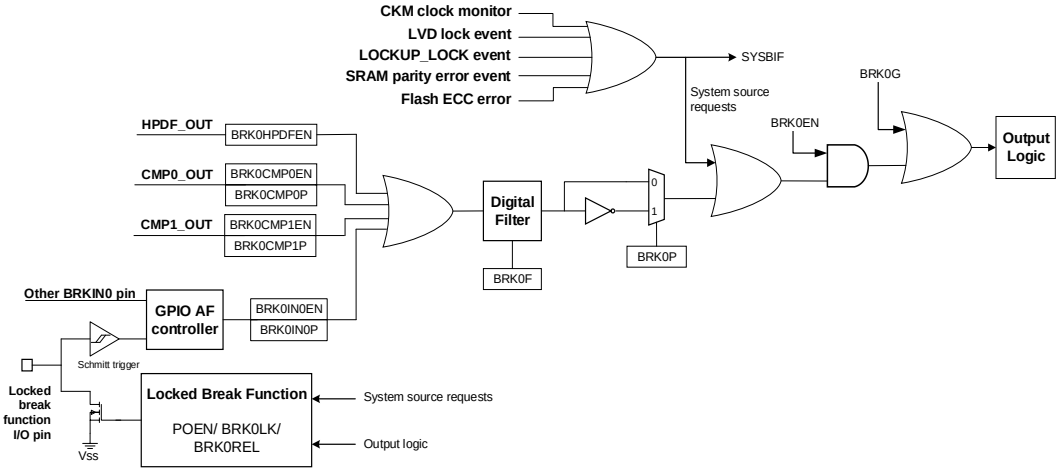

Master-slave management

The TIMERx can be synchronized with a trigger in several modes including the restart mode, the pause mode and the event mode and so on, which is selected by the TSCFGy[4:0] (y=3..7) in SYSCFG_TIMERxCFG(x=14,40,41,42,43,44).

Table 24-17. Slave mode example table

	Mode Selection	Source Selection	Polarity Selection	Filter and Prescaler
LIST	TSCFGy[4:0] y=3: restart mode	TSCFGy[4:0] 00000:Mode disable	If you choose the CIxFEx(x=0, 1) or	For the ITIx no filter and prescaler can be used.

	Mode Selection	Source Selection	Polarity Selection	Filter and Prescaler
	y=4: pause mode y=5: event mode y=6: external clock mode 0 y=7: restart + event mode	00001: ITI0 00010: ITI1 00011: ITI2 00100: ITI3 00101: CI0F_ED 00110: CI0FE0 00111: CI1FE1 10010: MCI0FEM0 10011: ITI14	MCIxFEMx(x=0), configure the CHxP, MCHxP and MCHxFP for the polarity selection and inversion.	For the CIx/ MCIx, configure Filter by CHxCAPFLT/ MCHxCAPFLT, no prescaler can be used.
Exam1	**Restart mode** The counter can be clear and restart when a rising trigger input.	TSCFG3[4:0] 5'b00001, ITI0 is the selection.	For ITI0, no polarity selector can be used.	For the ITI0, no filter and prescaler can be used.
	Figure 24-104. Restart mode 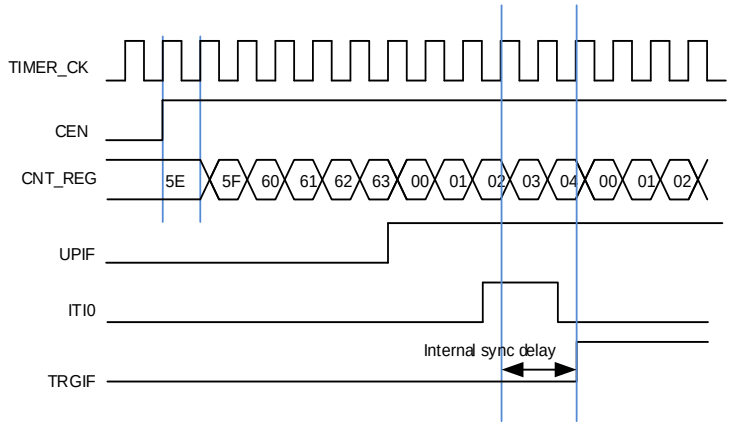 			
Exam2	**Pause mode** The counter can be paused when the trigger input is low.	TSCFG4[4:0] =5'b00110, CI0FE0 is the selection.	TI0S=0.(Non-xor) [MCHxP=0, CH0P=0] no inverted. Capture will be sensitive to the rising edge only.	Filter is bypass in this example.
	Figure 24-105. Pause mode 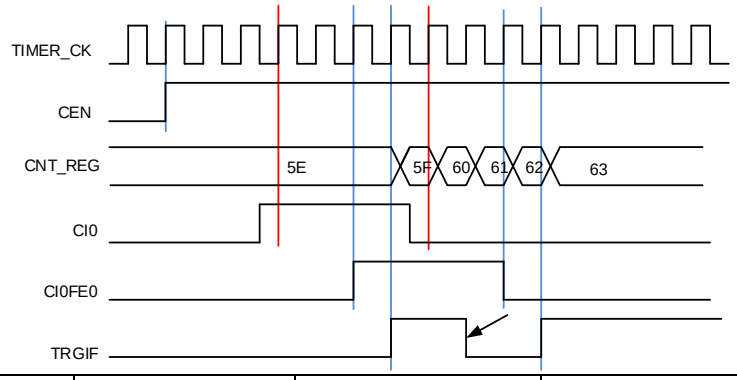 			
Exam3	**Event mode**	TSCFG5[4:0]	ETP = 0, the polarity of	ETPSC = 1, ETI is divided

	Mode Selection	Source Selection	Polarity Selection	Filter and Prescaler
	The counter will start to count when a rising edge of trigger input comes.	=5'b01000, ETIFP is selected.	ETI does not change.	by 2. ETFC = 0, ETI does not filter.

Figure 24-106. Event mode

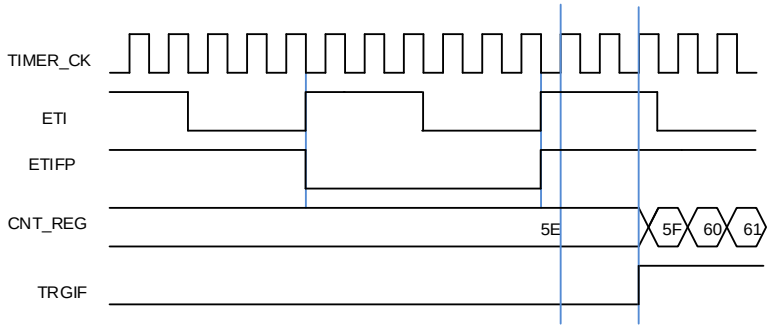

Single pulse mode

Single pulse mode is opposite to the repetitive mode, which can be enabled by setting SPM in TIMERx_CTL0. If SPM is set, the counter will be cleared and stopped automatically when the next update event occurs. In order to get a pulse waveform, the TIMERx is configured to PWM mode or compare mode by CHxCOMCTL or MCHxCOMCTL bits.

Once the timer is set to the single pulse mode, it is not necessary to configure the timer enable bit CEN in the TIMERx_CTL0 register to 1 to enable the counter. Setting the CEN bit to 1 or a trigger signal edge can generate a pulse and then keep the CEN bit at a high state until the update event occurs or the CEN bit is written to 0 by software. If the CEN bit is cleared to 0 by software, the counter will be stopped and its value will be held. If the CEN bit is automatically cleared to 0 by a hardware update event, the counter will be reinitialized.

In the single pulse mode, the active edge of trigger which sets the CEN bit to 1 will enable the counter. However, there exists several clock delays to perform the comparison result between the counter value and the TIMERx_CHxCV value. After a trigger rising occurs in the single pulse mode, the OxCPRE signal will immediately be forced to the state which the OxCPRE/ MOxCPRE signals will change to, as the compare match event occurs without taking the comparison result into account.

Single pulse mode is also applicable to composite PWM mode (CHxCPWMEN = 1'b1 and CHxMS[2:0] = 3'b000).

Figure 24-107. Single pulse mode TIMERx_CHxCV = 0x04 TIMERx_CAR=0x60

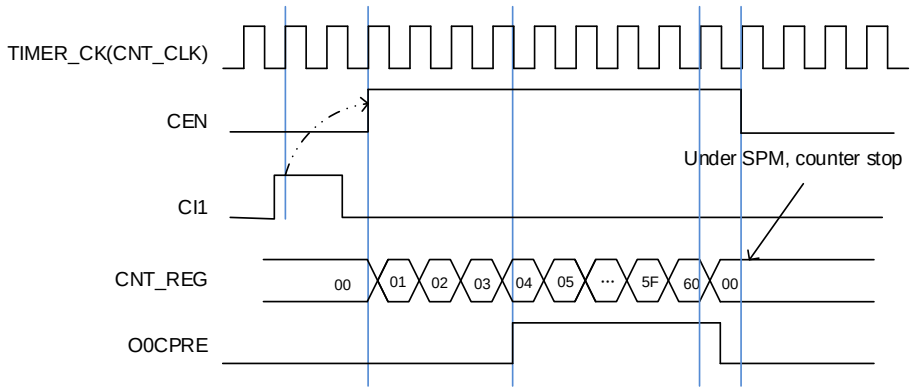

Delayable single pulse mode

Delayable single pulse mode is enabled by setting CHxCOMCTL[3:0]/ MCHxCOMCTL[3:0] in TIMERx_CHCTLx/ TIMERx_MCHCTLx registers. In this mode, the pulse width of OxCPRE/ MOxCPRE signal is determined by the TIMERx_CAR register.

Once the timer is set to the delayable single pulse mode, the following configuration is required:

- TIMERx need to work in slave mode and TSCFG7[4:0] != 5'b00000 in SYSCFG_TIMERxCFG(x=0,7);
- The CHxCOMCTL[3:0]/ MCHxCOMCTL[3:0] bit-field is setting to 4'b1000 (delayable single pulse mode 0) or 4'b1001 (delayable single pulse mode 1).

In delayable SPM mode 0. The behavior of OxCPRE/ MOxCPRE is performed as in PWM mode 0. When counting up, the OxCPRE/ MOxCPRE is active. When a trigger event occurs, the OxCPRE/ MOxCPRE is inactive. The OxCPRE/ MOxCPRE is active again at the next update event; When counting down, the OxCPRE/ MOxCPRE is inactive, when a trigger event occurs, the OxCPRE/ MOxCPRE is active. The OxCPRE/ MOxCPRE is inactive again at the next update event.

In delayable mode 1. The behavior of OxCPRE/ MOxCPRE is performed as in PWM mode 1. When counting up, the OxCPRE/ MOxCPRE is inactive, when a trigger event occurs, the OxCPRE/ MOxCPRE is active. The OxCPRE/ MOxCPRE is inactive again at the next update event; When counting down, the OxCPRE/ MOxCPRE is active. When a trigger event occurs, the OxCPRE/ MOxCPRE is inactive. The OxCPRE/ MOxCPRE is active again at the next update event.

Note:

3) The center-aligned counting mode cannot be used in this mode and the CAM[1:0] = 2'b00(in TIMERx_CTL0 register);
4) When counter counting up (DIR = 0 in TIMERx_CTL0 register), the value of TIMERx_CHxCV/ TIMERx_MCHxCV should be set to 0; When counting down (DIR =1 in TIMERx_CTL0 register), the the value of TIMERx_CHxCV/ TIMERx_MCHxCV should be

greater than or equal to the value of TIMERx_CAR register.

Figure 24-108. delayable single pulse mode TIMERx_CHxCV=0x00, TIMERx_CAR=0x60

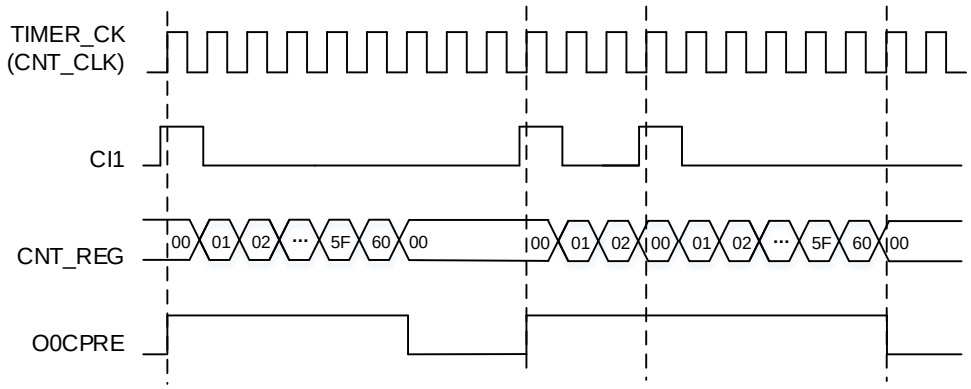

Timers interconnection

Please refer to ***Advanced timer (TIMERx, x=0, 7)Timers interconnection***.

Timer DMA mode

Timer's DMA mode is the function that configures timer's register by DMA module. The relative registers are TIMERx_DMACFG and TIMERx_DMATB. Of course, you have to enable a DMA request which will be asserted by some internal event. When the interrupt event was asserted, TIMERx will send a request to DMA, which is configured to M2P mode and PADDR is TIMERx_DMATB, then DMA will access the TIMERx_DMATB. In fact, register TIMERx_DMATB is only a buffer; timer will map the TIMERx_DMATB to an internal register, appointed by the field of DMATA in TIMERx_DMACFG. If the field of DMATC in TIMERx_DMACFG is 0(1 transfer), then the timer's DMA request is finished. While if TIMERx_DMATC is not 0, such as 3(4 transfers), then timer will send 3 more requests to DMA, and DMA will access timer's registers DMATA+0x4, DMATA+0x8, DMATA+0xc at the next 3 accesses to TIMERx_DMATB. In a word, one-time DMA internal interrupt event assert, DMATC+1 times request will be send by TIMERx.

If one more time DMA request event coming, TIMERx will repeat the process as above.

UPIF bit backup

The UPIF bit backup function is enabled by setting UPIFBUEN in the TIMERx_CTL0 register. The UPIF and UPIFBU bits are fully synchronized and without latency.

By using this function, the UPIF bit in the TIMERx_INTF register will be backuped to the UPIFBU bit in the TIMERx_CNT register. This can avoid conflicts when reading the counter and interrupt processing.

Timer debug mode

When the Cortex®-M7 halted, and the TIMERx_HOLD configuration bit in DBG_CTL1 register

set to 1, the TIMERx counter stops.

24.3.5. Register definition (TIMERx, x=14,40,41,42,43,44)

TIMER14 base address: 0x4001 4000

TIMER40 base address: 0x4001 D000

TIMER41 base address: 0x4001 D400

TIMER42 base address: 0x4001 D800

TIMER43 base address: 0x4001 DC00

TIMER44 base address: 0x4001 F000

Control register 0 (TIMERx_CTL0)

Address offset: 0x00
Reset value: 0x0000 0000

This register has to be accessed by word (32-bit).

31	30	29	28	27	26	25	24	23	22	21	20	19	18	17	16
Reserved															

15	14	13	12	11	10	9	8	7	6	5	4	3	2	1	0
Reserved				UPIFBUEN	Reserved	CKDIV[1:0]		ARSE	Reserved			SPM	UPS	UPDIS	CEN
				rw		rw		rw				rw	rw	rw	rw

Bits	Fields	Descriptions
31:12	Reserved	Must be kept at reset value.
11	UPIFBUEN	UPIF bit backup enable 0: Backup disable. UPIF bit is not backuped to UPIFBU bit in TIMERx_CNT register. 1: Backup enabled. UPIF bit is backuped to UPIFBU bit in TIMERx_CNT register.
10	Reserved	Must be kept at reset value.
9:8	CKDIV[1:0]	Clock division The CKDIV bits can be configured by software to specify division ratio between CK_TIMER (the timer clock) and DTS (the dead time and sampling clock) which is used for the dead time generator and the digital filter. 00: $f_{DTS}= f_{CK_TIMER}$ 01: $f_{DTS}= f_{CK_TIMER}$ /2 10: $f_{DTS}= f_{CK_TIMER}$ /4 11: Reserved
7	ARSE	Auto-reload shadow enable

		0: The shadow register for TIMERx_CAR register is disabled 1: The shadow register for TIMERx_CAR register is enabled
6:4	Reserved	Must be kept at reset value.
3	SPM	Single pulse mode 0: Single pulse mode is disabled. Counter continues after an update event. 1: Single pulse mode is enabled. The CEN bit is cleared by hardware and the counter stops at next update event.
2	UPS	Update source This bit is used to select the update event sources by software. 0: Any of the following events generates an update interrupt or a DMA request: – The UPG bit is set. – The counter generates an overflow event. – The slave mode controller generates an update event. 1: Only counter overflow generates an update interrupt or a DMA request.
1	UPDIS	Update disable This bit is used to enable or disable the update event generation. 0: Update event enable. The update event is generated and the buffered registers are loaded with their preloaded values when one of the following events occurs: – The UPG bit is set. – The counter generates an overflow event. – The slave mode controller generates an update event. 1: Update event disable. The buffered registers keep their value, while the counter and the prescaler are reinitialized if the UG bit is set or the slave mode controller generates a hardware reset event.
0	CEN	Counter enable 0: Counter disable 1: Counter enable The CEN bit must be set by software when timer works in external clock mode, pause mode or decoder mode. While in event mode, the hardware can set the CEN bit automatically.

Control register 1 (TIMERx_CTL1)

Address offset: 0x04
Reset value: 0x0000 0000

This register has to be accessed by word (32-bit).

31	30	29	28	27	26	25	24	23	22	21	20	19	18	17	16
CCUC[2:1]		Reserved													
rw															

15	14	13	12	11	10	9	8	7	6	5	4	3	2	1	0

Reserved	ISO1	ISO0N	ISO0	TI0S	MMC0[2:0]	DMAS	CCUC[0]	Reserved	CCSE
	rw	rw	rw	rw	rw	rw	rw		rw

Bits	Fields	Descriptions
31:30	CCUC[2:1]	Commutation control shadow register update control Refer to CCUC [0] description.
29:11	Reserved	Must be kept at reset value.
10	ISO1	Idle state of channel 1 output Refer to ISO0 bit
9	ISO0N	Idle state of multi mode channel 0 complementary output 0: When POEN bit is reset, MCH0_O is set low. 1: When POEN bit is reset, MCH0_O is set high. This bit can be modified only when PROT[1:0] bits in TIMERx_CCHP register is 00.
8	ISO0	Idle state of channel 0 output 0: When POEN bit is reset, CH0_O is set low. 1: When POEN bit is reset, CH0_O is set high. The CH0_O output changes after a dead time if MCH0_O is implemented. This bit can be modified only when PROT[1:0] bits in TIMERx_CCHP register is 00.
7	TI0S	Channel 0 trigger input selection 0: The TIMERx_CH0 pin input is selected as channel 0 trigger input. 1: The result of combinational XOR of TIMERx_CH0, TIMERx_CH1 and TIMERx_CH2 pins is selected as channel 0 trigger input.
6:4	MMC0[2:0]	Master mode control 0 These bits control the selection of TRGO0 signal, which is sent by master timer to slave timer for synchronization function. 000: Reset. When the UPG bit in the TIMERx_SWEVG register is set or a reset is generated by the slave mode controller, a TRGO0 pulse occurs. And in the latter case, the signal on TRGO0 is delayed compared to the actual reset. 001: Enable. This mode is used to start several timers at the same time or control a slave timer to be enabled in a period. In this mode, the master mode controller selects the counter enable signal as TRGO0. The counter enable signal is set when CEN control bit is set or the trigger input in pause mode is high. There is a delay between the trigger input in pause mode and the TRGO0 output, except if the master-slave mode is selected. 010: Update. In this mode, the master mode controller selects the update event as TRGO0. 011: Capture/compare pulse. In this mode, the master mode controller generates a TRGO0 pulse when a capture or a compare match occurs in channel 0. 100: Compare. In this mode, the master mode controller selects the O0CPRE signal as TRGO0.

		101: Compare. In this mode, the master mode controller selects the O1CPRE signal as TRGO0. 110: Reserved. 111: Reserved.
3	DMAS	DMA request source selection 0: DMA request of CHx/MCHx is sent when capture/compare event occurs. 1: DMA request of channel CHx/MCHx is sent when update event occurs.
2	CCUC[0]	Commutation control shadow register update control The CCUC[2:1] and CCUC[0] field are used to control the commutation control shadow register update. When the commutation control shadow registers (for CHxEN, MCHxEN and CHxCOMCTL bits) are enabled (CCSE=1), the update control of the shadow registers with the CCUC[2:0] bit-field are shown as below: 000: The shadow registers update when CMTG bit is set. 001: The shadow registers update when CMTG bit is set or a rising edge of TRGI occurs. 100: The shadow registers update when the counter generates an overflow event. Others: Reserved When a channel does not have a complementary output, this bit has no effect. **Note**: When CCUC[2:0] bit-field are set to 100, the update of the shadow registers also considers the value the CCUSEL bit in the TIMERx_CFG register.
1	Reserved	Must be kept at reset value.
0	CCSE	Commutation control shadow enable 0: The shadow registers (for CHxEN, MCHxEN and CHxCOMCTL bits) are disabled. 1: The shadow registers (for CHxEN, MCHxEN and CHxCOMCTL bits) are enabled. After these bits have been written, they are updated when commutation event comes. When a channel does not have a complementary output, this bit has no effect.

Slave mode configuration register (TIMERx_SMCFG)

Address offset: 0x08

Reset value: 0x0000 0000

This register has to be accessed by word (32-bit).

31	30	29	28	27	26	25	24	23	22	21	20	19	18	17	16
Reserved															

15	14	13	12	11	10	9	8	7	6	5	4	3	2	1	0
Reserved								MSM	Reserved						
								rw							

Bits	Fields	Descriptions
31:8	Reserved	Must be kept at reset value.
7	MSM	Master-slave mode This bit can be used to synchronize the selected timers to begin counting at the same time. The TRGI is used as the start event, and through TRGO, timers are connected. 0: Master-slave mode disabled 1: Master-slave mode enabled
6:0	Reserved	Must be kept at reset value.

DMA and interrupt enable register (TIMERx_DMAINTEN)

Address offset: 0x0C
Reset value: 0x0000 0000

This register has to be accessed by word (32-bit).

31	30	29	28	27	26	25	24	23	22	21	20	19	18	17	16
Reserved		CH1COMADDIE	CH0COMADDIE	Reserved			MCH0DEN	Reserved			MCH0IE	Reserved			
		rw	rw				rw				rw				

15	14	13	12	11	10	9	8	7	6	5	4	3	2	1	0
Reserved	TRGDEN	CMTDEN	Reserved		CH1DEN	CH0DEN	UPDEN	BRKIE	TRGIE	CMTIE	Reserved		CH1IE	CH0IE	UPIE
	rw	rw			rw	rw	rw	rw	rw	rw			rw	rw	rw

Bits	Fields	Descriptions
31:30	Reserved	Must be kept at reset value.
29	CH1COMADDIE	Channel 1 additional compare interrupt enable 0: Disabled 1: Enabled **Note:** This bit just used in composite PWM mode.
28	CH0COMADDIE	Channel 0 additional compare interrupt enable 0: Disabled 1: Enabled **Note:** This bit just used in composite PWM mode.
27:25	Reserved	Must be kept at reset value.
24	MCH0DEN	Multi mode channel 0 capture/compare DMA request enable 0: Disabled 1: Enabled **Note:** This bit just used for channel input and output independent mode (when MMCH0SEL[1:0] = 2b'00).

23:21	Reserved	Must be kept at reset value.
20	MCH0IE	Multi mode channel 0 capture/compare interrupt enable 0: Disabled 1: Enabled **Note:** This bit just used for channel input and output independent mode (when MMCH0SEL[1:0] = 2b'00).
19:15	Reserved	Must be kept at reset value.
14	TRGDEN	Trigger DMA request enable 0: Disabled 1: Enabled
13	CMTDEN	Commutation DMA request enable 0: Disabled 1: Enabled
12:11	Reserved	Must be kept at reset value.
10	CH1DEN	Channel 1 capture/compare DMA request enable 0: Disabled 1: Enabled
9	CH0DEN	Channel 0 capture/compare DMA request enable 0: Disabled 1: Enabled
8	UPDEN	Update DMA request enable 0: Disabled 1: Enabled
7	BRKIE	Break interrupt enable 0: Disabled 1: Enabled
6	TRGIE	Trigger interrupt enable 0: Disabled 1: Enabled
5	CMTIE	Commutation interrupt enable 0: Disabled 1: Enabled
4:3	Reserved	Must be kept at reset value.
2	CH1IE	Channel 1 capture/compare interrupt enable 0: Disabled 1: Enabled
1	CH0IE	Channel 0 capture/compare interrupt enable

		0: Disabled 1: Enabled
0	UPIE	Update interrupt enable 0: Disabled 1: Enabled

Interrupt flag register (TIMERx_INTF)

Address offset: 0x10

Reset value: 0x0000 0000

This register has to be accessed by word (32-bit).

31	30	29	28	27	26	25	24	23	22	21	20	19	18	17	16
Reserved		CH1COM ADDIF	CH0COM ADDIF	Reserved			MCH0OF	Reserved			MCH0IF	Reserved			
		rc_w0	rc_w0				rc_w0				rc_w0				

15	14	13	12	11	10	9	8	7	6	5	4	3	2	1	0
Reserved					CH1OF	CH0OF	Reserved	BRK0IF	TRGIF	CMTIF	Reserved		CH1IF	CH0IF	UPIF
					rc_w0	rc_w0		rc_w0	rc_w0	rc_w0			rc_w0	rc_w0	rc_w0

Bits	Fields	Descriptions
31:30	Reserved	Must be kept at reset value.
29	CH1COMADDIF	Channel 1 additional compare interrupt flag. Refer to CH0COMADDIF description.
28	CH0COMADDIF	Channel 0 additional compare interrupt flag. This flag is set by hardware and cleared by software. If channel 0 is in output mode, this flag is set when a compare event occurs. 0: No channel 0 output compare interrupt occurred 1: Channel 0 output compare interrupt occurred **Note:** This flag just used in composite PWM mode.
27:25	Reserved	Must be kept at reset value.
24	MCH0OF	Multi mode channel 0 over capture flag When multi mode channel 0 is configured in input mode, this flag is set by hardware when a capture event occurs while MCH0IF flag has already been set. This flag is cleared by software. 0: No over capture interrupt occurred 1: Over capture interrupt occurred
23:21	Reserved	Must be kept at reset value.
20	MCH0IF	Multi mode channel 0 capture/compare interrupt flag This flag is set by hardware and cleared by software.

		If multi mode channel 0 is in input mode, this flag is set when a capture event occurs. If multi mode channel 0 is in output mode, this flag is set when a compare event occurs. If multi mode channel 0 is set to input mode, this bit will be reset by reading TIMERx_MCH0CV. 0: No multi mode channel 0 capture/compare interrupt occurred 1: Multi mode channel 0 capture/compare interrupt occurred
19:11	Reserved	Must be kept at reset value.
10	CH1OF	Channel 1 over capture flag Refer to CH0OF description
9	CH0OF	Channel 0 over capture flag When channel 0 is configured in input mode, this flag is set by hardware when a capture event occurs while CH0IF flag has already been set. This flag is cleared by software. 0: No over capture interrupt occurred 1: Over capture interrupt occurred
8	Reserved	Must be kept at reset value.
7	BRK0IF	BREAK0 interrupt flag This flag is set by hardware when the break input is active, and cleared by software if the BREAK0 input is not at active level. 0: No active level on BREAK0 input has been detected. 1: An active level on BREAK0 input has been detected.
6	TRGIF	Trigger interrupt flag This flag is set by hardware on trigger event and cleared by software. When the slave mode controller is enabled in all modes but pause mode, an active edge of trigger input generates a trigger event. When the slave mode controller is enabled in pause mode, either edge of the trigger input can generate a trigger event. 0: No trigger event occurred 1: Trigger interrupt occurred
5	CMTIF	Channel commutation interrupt flag This flag is set by hardware when the commutation event of channel occurs, and cleared by software. 0: No channel commutation interrupt occurred 1: Channel commutation interrupt occurred
4:3	Reserved	Must be kept at reset value.
2	CH1IF	Channel 1 capture/compare interrupt flag Refer to CH0IF description
1	CH0IF	Channel 0 capture/compare interrupt flag This flag is set by hardware and cleared by software.

		If channel 0 is in input mode, this flag is set when a capture event occurs. If channel 0 is in output mode, this flag is set when a compare event occurs. If channel 0 is set to input mode, this bit will be reset by reading TIMERx_CH0CV. 0: No channel 0 interrupt occurred 1: Channel 0 interrupt occurred
0	UPIF	Update interrupt flag This bit is set by hardware when an update event occurs and cleared by software. 0: No update interrupt occurred 1: Update interrupt occurred

Software event generation register (TIMERx_SWEVG)

Address offset: 0x14

Reset value: 0x0000 0000

This register has to be accessed by word (32-bit).

31	30	29	28	27	26	25	24	23	22	21	20	19	18	17	16
Reserved		CH1COMADDG	CH0COMADDG	Reserved							MCH0G	Reserved			
		w	w								w				

15	14	13	12	11	10	9	8	7	6	5	4	3	2	1	0
Reserved								BRK0G	TRGG	CMTG	Reserved		CH1G	CH0G	UPG
								w	w	w			w	w	w

Bits	Fields	Descriptions
31:30	Reserved	Must be kept at reset value.
29	CH1COMADDG	Channel 1 additional compare event generation. Refer to CH0COMADDG description.
28	CH0COMADDG	Channel 0 additional compare event generation. This bit is set by software to generate a compare event in channel 0 additional, it is automatically cleared by hardware. When this bit is set, the CH0COMADDIF flag will be set, and the corresponding interrupt will be sent if enabled. 0: No generate a channel 0 additional compare event 1: Generate a channel 0 additional compare event **Note:** This bit just used in composite PWM mode.
27:21	Reserved	Must be kept at reset value.
20	MCH0G	Multi mode channel 0 capture or compare event generation. This bit is set by software to generate a capture or compare event in multi mode channel 0, it is automatically cleared by hardware. When this bit is set, the MCH0IF flag will be set, and the corresponding interrupt or DMA request will be sent if

		enabled. In addition, if multi mode channel 0 is configured in input mode, the current value of the counter is captured to TIMERx_MCH0CV register, and the MCH0OF flag is set if the MCH0IF flag has been set. 0: No generate a multi mode channel 0 capture or compare event 1: Generate a multi mode channel 0 capture or compare event
19:8	Reserved	Must be kept at reset value.
7	BRK0G	BREAK0 event generation This bit is set by software to generate an event and cleared by hardware automatically. When this bit is set, the POEN bit will be cleared and BRK0IF flag will be set, related interrupt can occur if enabled. 0: No generate a BREAK0 event 1: Generate a BREAK0 event
6	TRGG	Trigger event generation This bit is set by software and cleared by hardware automatically. When this bit is set, the TRGIF flag in TIMERx_INTF register will be set, related interrupt or DMA transfer can occur if enabled. 0: No generate a trigger event 1: Generate a trigger event
5	CMTG	Channel commutation event generation This bit is set by software and cleared by hardware automatically. When this bit is set, channel's capture/compare control registers (CHxEN, MCHxEN and CHxCOMCTL bits) are updated based on the value of CCSE (in the TIMERx_CTL1). 0: No affect 1: Generate channel commutation update event
4:3	Reserved	Must be kept at reset value.
2	CH1G	Channel 1 capture or compare event generation Refer to CH0G description
1	CH0G	Channel 0 capture or compare event generation This bit is set by software to generate a capture or compare event in channel 0, it is automatically cleared by hardware. When this bit is set, the CH0IF flag will be set, and the corresponding interrupt or DMA request will be sent if enabled. In addition, if channel 0 is configured in input mode, the current value of the counter is captured to TIMERx_CH0CV register, and the CH0OF flag is set if the CH0IF flag has been set. 0: No generate a channel 0 capture or compare event 1: Generate a channel 0 capture or compare event
0	UPG	Update event generation This bit can be set by software, and automatically cleared by hardware. When this bit is set, the counter is cleared if the up counting mode is selected. The prescaler

counter is cleared at the same time.

0: No generate an update event

1: Generate an update event

Channel control register 0 (TIMERx_CHCTL0)

Address offset: 0x18

Reset value: 0x0000 0000

This register has to be accessed by word (32-bit).

31	30	29	28	27	26	25	24	23	22	21	20	19	18	17	16
CH1MS[2]	CH0MS[2]	CH1COMADDSEN	CH0COMADDSEN	Reserved			CH1COMCTL[3]	Reserved							CH0COMCTL[3]
		Reserved	Reserved				Reserved								Reserved
rw	rw	rw	rw				rw								rw

15	14	13	12	11	10	9	8	7	6	5	4	3	2	1	0
Reserved	CH1COMCTL[2:0]			CH1COMSEN	Reserved	CH1MS[1:0]		Reserved	CH0COMCTL[2:0]			CH0COMSEN	Reserved	CH0MS[1:0]	
CH1CAPFLT[3:0]				CH1CAPPSC[1:0]				CH0CAPFLT[3:0]				CH0CAPPSC[1:0]			
rw				rw		rw		rw				rw		rw	

Output compare mode:

Bits	Fields	Descriptions
31	CH1MS[2]	Channel 1 I/O mode selection Refer to CH1MS[1:0]description
30	CH0MS[2]	Channel 0 I/O mode selection Refer to CH0MS[1:0] description
29	CH1COMADDSEN	Channel 1 additional compare output shadow enable Refer to CH0COMADDSEN description.
28	CH0COMADDSEN	Channel 0 additional compare output shadow enable When this bit is set, the shadow register of TIMERx_CH0COMV_ADD register which updates at each update event will be enabled. 0: Channel 0 additional compare output shadow disabled 1: Channel 0 additional compare output shadow enabled The PWM mode can be used without validating the shadow register only in single pulse mode (SPM bit in TIMERx_CTL0 register is set). This bit cannot be modified when PROT[1:0] bit-field in TIMERx_CCHP register is 11 and CH0MS bit-field is 000.
27:25	Reserved	Must be kept at reset value.
24	CH1COMCTL[3]	Channel 1 compare output control Refer to CH0COMCTL[2:0] description

23:17	Reserved	Must be kept at reset value.
16	CH0COMCTL[3]	Channel 0 compare output control Refer to CH0COMCTL[2:0] description
15	Reserved	Must be kept at reset value.
14:12	CH1COMCTL[2:0]	Channel 1 compare output control Refer to CH0COMCTL[2:0] description
11	CH1COMSEN	Channel 1 output compare shadow enable Refer to CH0COMSEN description
10	Reserved	Must be kept at reset value.
9:8	CH1MS[1:0]	Channel 1 mode selection This bit-field specifies the direction of the channel and the input signal selection. The CH1MS[2:0] bit-field is writable only when the channel is not active (When MCH1MSEL[1:0] = 2b'00, the CH1EN bit in TIMERx_CHCTL2 register is reset; when MCH1MSEL[1:0] = 2b'11, the CH1EN and MCH1EN bits in TIMERx_CHCTL2 register are reset). 000: Channel 1 is configured as output. 001: Channel 1 is configured as input, IS1 is connected to CI1FE1. 010: Channel 1 is configured as input, IS1 is connected to CI0FE1. 011: Channel 1 is configured as input, IS1 is connected to ITS. This mode is working only if an internal trigger input is selected (through TSCFG15[4:0] bit-field in SYSCFG_TIMERxCFG2(x=14,40,41,42,43,44) register). 100~111: Reserved.
7	Reserved	Must be kept at reset value.
6:4	CH0COMCTL[2:0]	Channel 0 compare output control The CH0COMCTL[3] and CH0COMCTL[2:0] bit-field control the behavior of O0CPRE which drives CH0_O. The active level of O0CPRE is high, while the active level of CH0_O depends on CH0P bit. **Note**: When multi mode channel 0 is configured in output mode, and the MCH0MSEL[1:0] = 2b'11, This bit-field controls the behavior of O0CPRE which drives CH0_O and MCH0_O. The active level of O0CPRE is high, while the active level of CH0_O and MCH0_O depends on CH0P and MCH0P bits. 0000: Timing mode. The O0CPRE signal keeps stable, independent of the comparison between the register TIMERx_CH0CV and the counter TIMERx_CNT. 0001: Set the channel output on match. O0CPRE signal is forced high when the counter matches the output compare register TIMERx_CH0CV. 0010: Clear the channel output on match. O0CPRE signal is forced low when the counter matches the output compare register TIMERx_CH0CV. 0011: Toggle on match. O0CPRE toggles when the counter matches the output compare register TIMERx_CH0CV. 0100: Force low. O0CPRE is forced low level.

		0101: Force high. O0CPRE is forced high level. 0110: PWM mode 0. When counting up, O0CPRE is active as long as the counter is smaller than TIMERx_CH0CV, otherwise it is inactive. When counting down, O0CPRE is inactive as long as the counter is larger than TIMERx_CH0CV, otherwise it is active. 0111: PWM mode 1. When counting up, O0CPRE is inactive as long as the counter is smaller than TIMERx_CH0CV, otherwise it is active. When counting down, O0CPRE is active as long as the counter is larger than TIMERx_CH0CV, otherwise it is inactive. 1000: Delayable SPM mode 0. The behavior of O0CPRE is performed as in PWM mode 0. When counting up, the O0CPRE is active. When a trigger event occurs, the O0CPRE is inactive. The O0CPRE is active again at the next update event; When counting down, the O0CPRE is inactive, when a trigger event occurs, the O0CPRE is active. The O0CPRE is inactive again at the next update event. 1001: Delayable SPM mode 1. The behavior of O0CPRE is performed as in PWM mode 1. When counting up, the O0CPRE is inactive, when a trigger event occurs, the O0CPRE is active. The O0CPRE is inactive again at the next update event; When counting down, the O0CPRE is active. When a trigger event occurs, the O0CPRE is inactive. The O0CPRE is active again at the next update event. 1010~1111: Reserved. **Note**: In the composite PWM mode (CH0CPWMEN = 1'b1 and CH0MS = 3'b000), the PWM signal output in channel 0 is composited by TIMERx_CH0CV and TIMERx_CH0COMV_ADD. Please refer to ***Composite PWM mode*** for more details. If configured in PWM mode, the O0CPRE level changes only when the output compare mode switches from "Timing" mode to "PWM" mode or the result of the comparison changes. When the outputs of CH0 and MCH0 are complementary, this bit-field is preloaded. If CCSE =1, this bit-field will only be updated when a channel commutation event is generated. This bit cannot be modified when PROT[1:0] bit-field in TIMERx_CCHP register is 11 and CH0MS bit-field is 000 (compare mode).
3	CH0COMSEN	Channel 0 compare output shadow enable When this bit is set, the shadow register of TIMERx_CH0CV register which updates at each update event will be enabled. 0: Channel 0 output compare shadow disabled 1: Channel 0 output compare shadow enabled The PWM mode can be used without validating the shadow register only in single pulse mode (SPM bit in TIMERx_CTL0 register is set). This bit cannot be modified when PROT[1:0] bit-field in TIMERx_CCHP register is 11 and CH0MS bit-field is 000.
2	Reserved	Must be kept at reset value.

1:0	CH0MS[1:0]	Channel 0 I/O mode selection This bit-field specifies the work mode of the channel and the input signal selection. The CH0MS[2:0] bit-field is writable only when the channel is not active (When MCH0MSEL[1:0] = 2b'00, the CH1EN bit in TIMERx_CHCTL2 register is reset; when MCH0MSEL[1:0] = 2b'11, the CH0EN and MCH0EN bits in TIMERx_CHCTL2 register are reset). 000: Channel 0 is configured as output. 001: Channel 0 is configured as input, IS0 is connected to CI0FE0. 010: Channel 0 is configured as input, IS0 is connected to CI1FE0. 011: Channel 0 is configured as input, IS0 is connected to ITS, this mode is working only if an internal trigger input is selected (through TSCFG15[4:0] bit-field in SYSCFG_TIMERxCFG2(x=14,40,41,42,43,44) register). 100: Channel 0 is configured as input, IS0 is connected to MCI0FE0. 101~111: Reserved.

Input capture mode:

Bits	Fields	Descriptions
31	CH1MS[2]	Channel 1 I/O mode selection Same as output compare mode.
30	CH0MS[2]	Channel 0 I/O mode selection Same as output compare mode.
29:16	Reserved	Must be kept at reset value.
15:12	CH1CAPFLT[3:0]	Channel 1 input capture filter control Refer to CH0CAPFLT description.
11:10	CH1CAPPSC[1:0]	Channel 1 input capture prescaler Refer to CH0CAPPSC description.
9:8	CH1MS[1:0]	Channel 1 I/O mode selection Same as output compare mode.
7:4	CH0CAPFLT[3:0]	Channel 0 input capture filter control An event counter is used in the digital filter, in which a transition on the output occurs after N input events. This bit-field specifies the frequency used to sample CI0 input signal and the length of the digital filter applied to CI0. 0000: Filter disabled, $f_{SAMP}=f_{DTS}$, N=1. 0001: $f_{SAMP}=f_{CK_TIMER}$, N=2. 0010: $f_{SAMP}= f_{CK_TIMER}$, N=4. 0011: $f_{SAMP}= f_{CK_TIMER}$, N=8. 0100: $f_{SAMP}=f_{DTS}/2$, N=6. 0101: $f_{SAMP}=f_{DTS}/2$, N=8. 0110: $f_{SAMP}=f_{DTS}/4$, N=6. 0111: $f_{SAMP}=f_{DTS}/4$, N=8. 1000: $f_{SAMP}=f_{DTS}/8$, N=6.

		1001: $f_{SAMP}=f_{DTS}/8$, N=8. 1010: $f_{SAMP}=f_{DTS}/16$, N=5. 1011: $f_{SAMP}=f_{DTS}/16$, N=6. 1100: $f_{SAMP}=f_{DTS}/16$, N=8. 1101: $f_{SAMP}=f_{DTS}/32$, N=5. 1110: $f_{SAMP}=f_{DTS}/32$, N=6. 1111: $f_{SAMP}=f_{DTS}/32$, N=8.
3:2	CH0CAPPSC[1:0]	Channel 0 input capture prescaler This bit-field specifies the factor of the prescaler on channel 0 input. The prescaler is reset when CH0EN bit in TIMERx_CHCTL2 register is cleared. 00: Prescaler disabled, capture is done on each channel input edge. 01: Capture is done every 2 channel input edges. 10: Capture is done every 4 channel input edges. 11: Capture is done every 8 channel input edges.
1:0	CH0MS[1:0]	Channel 0 I/O mode selection Same as output compare mode.

Channel control register 2 (TIMERx_CHCTL2)

Address offset: 0x20

Reset value: 0x0000 0000

This register can be accessed by half-word(16-bit) or word(32-bit).

31	30	29	28	27	26	25	24	23	22	21	20	19	18	17	16
Reserved															

15	14	13	12	11	10	9	8	7	6	5	4	3	2	1	0
Reserved								MCH1P	Reserved	CH1P	CH1EN	MCH0P	MCH0EN	CH0P	CH0EN
								rw		rw	rw	rw	rw	rw	rw

Bits	Fields	Descriptions
31:8	Reserved	Must be kept at reset value.
7	MCH1P	Multi mode channel 1 output polarity Refer to MCH0P description.
6	Reserved	Must be kept at reset value.
5	CH1P	Channel 1 capture/compare polarity Refer to CH0P description.
4	CH1EN	Channel 1 capture/compare enable Refer to CH0EN description.
3	MCH0P	Multi mode channel 0 output polarity

		When Multi mode channel 0 is configured in output mode, and the MCH0MSEL[1:0] = 2b'11, this bit specifies the MCH0_O output signal polarity. 0: Multi mode channel 0 output active high 1: Multi mode channel 0 output active low When CH0 is configured in input mode, in conjunction with CH0P, this bit is used to define the polarity of CH0. This bit cannot be modified when PROT[1:0] bit-field in TIMERx_CCHP register is 11 or 10.
2	MCH0EN	Multi mode channel 0 capture/compare enable When multi mode channel 0 is configured in output mode, setting this bit enables MCH0_O signal in active state. When multi mode channel 0 is configured in input mode, setting this bit enables the capture event in multi mode channel 0. 0: Multi mode channel 0 disabled 1: Multi mode channel 0 enabled
1	CH0P	Channel 0 capture/compare polarity When channel 0 is configured in output mode, this bit specifies the output signal polarity. 0: Channel 0 active high 1: Channel 0 active low When channel 0 is configured in input mode, these bits specifie the channel 0 input signal's polarity. [MCH0P, CH0P] will select the active trigger or capture polarity for channel 0 input signals. 00: Channel 0 input signal's rising edge is the active signal for capture or trigger operation in slave mode. And channel 0 input signal will not be inverted. 01: Channel 0 input signal's falling edge is the active signal for capture or trigger operation in slave mode. And channel 0 input signal will be inverted. 10: Reserved. 11: Noninverted/both channel 0 input signal's edges. This bit cannot be modified when PROT[1:0] bit-field in TIMERx_CCHP register is 11 or 10.
0	CH0EN	Channel 0 capture/compare enable When channel 0 is configured in output mode, setting this bit enables CH0_O signal in active state. When channel 0 is configured in input mode, setting this bit enables the capture event in channel 0. 0: Channel 0 disabled 1: Channel 0 enabled

Counter register (TIMERx_CNT)

Address offset: 0x24
Reset value: 0x0000 0000

This register has to be accessed by word (32-bit).

31	30	29	28	27	26	25	24	23	22	21	20	19	18	17	16
UPIFBU	Reserved														
r															

15	14	13	12	11	10	9	8	7	6	5	4	3	2	1	0
CNT[15:0]															
rw															

Bits	Fields	Descriptions
31	UPIFBU	UPIF bit backup This bit is a backup of UPIF bit in TIMERx_INTF register, and read-only. This bit is only valid when UPIFBUEN = 1. If the UPIFBUEN =0, this bit is reserved and read the result is 0.
30:16	Reserved	Must be kept at reset value.
15:0	CNT[15:0]	This bit-field indicates the current counter value. Writing to this bit-field can change the value of the counter.

Prescaler register (TIMERx_PSC)

Address offset: 0x28
Reset value: 0x0000 0000

This register has to be accessed by word (32-bit).

31	30	29	28	27	26	25	24	23	22	21	20	19	18	17	16
Reserved															

15	14	13	12	11	10	9	8	7	6	5	4	3	2	1	0
PSC[15:0]															
rw															

Bits	Fields	Descriptions
31:16	Reserved	Must be kept at reset value.
15:0	PSC[15:0]	Prescaler value of the counter clock The PSC clock is divided by (PSC+1) to generate the counter clock. The value of this bit-field will be loaded to the corresponding shadow register at every update event.

Counter auto reload register (TIMERx_CAR)

Address offset: 0x2C
Reset value: 0x0000 FFFF

This register has to be accessed by word (32-bit).

31	30	29	28	27	26	25	24	23	22	21	20	19	18	17	16
Reserved															

15	14	13	12	11	10	9	8	7	6	5	4	3	2	1	0
CARL[15:0]															
rw															

Bits	Fields	Descriptions
31:16	Reserved	Must be kept at reset value.
15:0	CARL[15:0]	Counter auto reload value This bit-field specifies the auto reload value of the counter.

Counter repetition register 0 (TIMERx_CREP0)

Address offset: 0x30

Reset value: 0x0000 0000

This register has to be accessed by word (32-bit).

31	30	29	28	27	26	25	24	23	22	21	20	19	18	17	16
Reserved															

15	14	13	12	11	10	9	8	7	6	5	4	3	2	1	0
Reserved								CREP0[7:0]							
								rw							

Bits	Fields	Descriptions
31:8	Reserved	Must be kept at reset value.
7:0	CREP0[7:0]	Counter repetition value 0 This bit-field specifies the update event generation rate. Each time the repetition counter counts down to zero, an update event will be generated. The update rate of the shadow registers is also affected by this bit-field when these shadow registers are enabled. **Note**: This bit-field just used with CREPSEL =0 (in TIMERx_CFG register).

Channel 0 capture/compare value register (TIMERx_CH0CV)

Address offset: 0x34

Reset value: 0x0000 0000

This register has to be accessed by word (32-bit).

31	30	29	28	27	26	25	24	23	22	21	20	19	18	17	16
Reserved															

15	14	13	12	11	10	9	8	7	6	5	4	3	2	1	0
CH0VAL[15:0]															
rw															

Bits	Fields	Descriptions
31:16	Reserved	Must be kept at reset value.
15:0	CH0VAL[15:0]	Capture/compare value of channel 0 When channel 0 is configured in input mode, this bit-field indicates the counter value at the last capture event. And this bit-field is read-only. When channel 0 is configured in output mode, this bit-field contains value to be compared to the counter. When the corresponding shadow register is enabled, the shadow register updates by every update event.

Channel 1 capture/compare value register (TIMERx_CH1CV)

Address offset: 0x38

Reset value: 0x0000 0000

This register has to be accessed by word (32-bit).

31	30	29	28	27	26	25	24	23	22	21	20	19	18	17	16
Reserved															

15	14	13	12	11	10	9	8	7	6	5	4	3	2	1	0
CH1VAL[15:0]															
rw															

Bits	Fields	Descriptions
31:16	Reserved	Must be kept at reset value.
15:0	CH1VAL[15:0]	Capture/compare value of channel 1 When channel 1 is configured in input mode, this bit-field indicates the counter value at the last capture event. And this bit-field is read-only. When channel 1 is configured in output mode, this bit-field contains value to be compared to the counter. When the corresponding shadow register is enabled, the shadow register updates by every update event.

Complementary channel protection register (TIMERx_CCHP)

Address offset: 0x44

Reset value: 0x0000 0000

This register has to be accessed by word (32-bit).

31	30	29	28	27	26	25	24	23	22	21	20	19	18	17	16
Reserved			BRK0LK	Reserved	BRK0REL	Reserved						BRK0F[3:0]			

			rw		rw									rw	
15	14	13	12	11	10	9	8	7	6	5	4	3	2	1	0
POEN	OAEN	BRK0P	BRK0EN	ROS	IOS	PROT[1:0]		DTCFG[7:0]							
rw	rw	rw	rw	rw	rw	rw		rw							

Bits	Fields	Descriptions
31:29	Reserved	Must be kept at reset value.
28	BRK0LK	BREAK0 input locked 0: BREAK0 input in input mode 1: BREAK0 input in locked mode When the BRK0LK is set to 1, the BREAK0 input is configured in open drain output mode. Any active BREAK0 event asserts a low logic level on the Break input to indicate an internal break event to external devices. This bit can be modified only when PROT[1:0] bit-field in TIMERx_CCHP register is 00. **Note**: Every write operation to this bit needs a delay of 1 APB clock to active.
27	Reserved	Must be kept at reset value.
26	BRK0REL	BREAK0 input released This bit is cleared by hardware when the BREAK0 input is invalid. 0: BREAK0 input is unreleased 1: BREAK0 input is released The locked output control (open drain mode in Hi-z state) is released by setting this bit with software. And when the fault is disappeared, this bit will reset by hardware. **Note**: Every write operation to this bit needs a delay of 1 APB clock to active.
25:20	Reserved	Must be kept at reset value.
19:16	BRK0F[3:0]	BREAK0 input signal filter An event counter is used in the digital filter, in which a transition on the output occurs after N input events. This bit-field specifies the frequency used to sample BREAK0 input signal and the length of the digital filter applied to BREAK0. 0000: Filter disabled. BREAK0 act asynchronously, N=1 0001: $f_{SAMP} = f_{CK_TIMER}$, N=2 0010: $f_{SAMP} = f_{CK_TIMER}$, N=4 0011: $f_{SAMP} = f_{CK_TIMER}$, N=8 0100: $f_{SAMP} = f_{DTS}/2$, N=6 0101: $f_{SAMP} = f_{DTS}/2$, N=8 0110: $f_{SAMP} = f_{DTS}/4$, N=6 0111: $f_{SAMP} = f_{DTS}/4$, N=8 1000: $f_{SAMP} = f_{DTS}/8$, N=6 1001: $f_{SAMP} = f_{DTS}/8$, N=8 1010: $f_{SAMP} = f_{DTS}/16$, N=5

		1011: $f_{SAMP} = f_{DTS}/16$, N=6 1100: $f_{SAMP} = f_{DTS}/16$, N=8 1101: $f_{SAMP} = f_{DTS}/32$, N=5 1110: $f_{SAMP} = f_{DTS}/32$, N=6 1111: $f_{SAMP} = f_{DTS}/32$, N=8 This bit can be modified only when PROT[1:0] bit-field in TIMERx_CCHP register is 00.
15	POEN	Primary output enable This bit is set by software or automatically set by hardware depending on the OAEN bit. It is cleared asynchronously by hardware as soon as the break input is active. When one of channels is configured in output mode, setting this bit enables the channel outputs (CHx_O and MCHx_O) if the corresponding enable bits (CHxEN, MCHxEN in TIMERx_CHCTL2 register) have been set. 0: Channel outputs are disabled or forced to idle state. 1: Channel outputs are enabled.
14	OAEN	Output automatic enable This bit specifies whether the POEN bit can be set automatically by hardware. 0: POEN cannot be set by hardware. 1: POEN can be set by hardware automatically at the next update event, if the break input is not active. This bit can be modified only when PROT[1:0] bit-field in TIMERx_CCHP register is 00.
13	BRK0P	BREAK0 input signal polarity This bit specifies the polarity of the BREAK0 input signal. 0: BREAK0 input active low 1: BREAK0 input active high This bit can be modified only when PROT[1:0] bit-field in TIMERx_CCHP register is 00.
12	BRK0EN	BREAK0 input signal enable This bit can be set to enable the BREAK0 input signal 0: BREAK0 input disabled 1: BREAK0 input enabled This bit can be modified only when PROT[1:0] bit-field in TIMERx_CCHP register is 00.
11	ROS	Run mode “off-state” enable When POEN bit is set (Run mode), this bit can be set to enable the “off-state” for the channels which has been configured in output mode. Please refer to ***Table 24-15. Complementary outputs controlled by parameters (MCHxMSEL =2’b11)***. 0: “off-state” disabled. If the CHxEN or CHxNEN bit is reset, the corresponding channel is output disabled.

		1: “off-state” enabled. If the CHxEN or CHxNEN bit is reset, the corresponding channel is “off-state”. This bit cannot be modified when PROT [1:0] bit-filed in TIMERx_CCHP register is 10 or 11.
10	IOS	Idle mode “off-state” enable When POEN bit is reset (Idle mode), this bit can be set to enable the “off-state” for the channels which has been configured in output mode. Please refer to ***Table 24-15. Complementary outputs controlled by parameters (MCHxMSEL =2’b11)***. 0: “off-state” disabled. If the CHxEN/CHxNEN bits are both reset, the channels are output disabled. 1: “off-state” enabled. No matter the CHxEN/CHxNEN bits, the channels are “off-state”. This bit cannot be modified when PROT [1:0] bit-filed in TIMERx_CCHP register is 10 or 11.
9:8	PROT[1:0]	Complementary register protect control This bit-field specifies the write protection property of registers. 00: Protect disabled. No write protection. 01: PROT mode 0. The ISOx/ISOxN bits in TIMERx_CTL1 register, the BRK0EN/ BRK0P/OAEN/DTCFG bits in TIMERx_CCHP register are writing protected. 10: PROT mode 1. In addition to the registers in PROT mode 0, the CHxP/MCHxP bits in TIMERx_CHCTL2 register (if related channel is configured in output mode) the ROS/IOS bits in TIMERx_CCHP register are writing protected. 11: PROT mode 2. In addition to the registers in PROT mode 1, the CHxCOMCTL/ CHxCOMSEN/ CHxCOMADDSEN/ MCHxCOMCTL/ MCHxCOMSEN bits in TIMERx_CHCTL0 and TIMERx_MCHCTL0 registers (if the related channel is configured in output) are writing protected. This bit-field can be written only once after the system reset. Once the TIMERx_CCHP register has been written, this bit-field will be writing protected.
7:0	DTCFG[7:0]	Dead time configuration This bit-field controls the value of the dead-time, which is inserted before the output transitions. The relationship between the value of DTCFG and the duration of dead-time is as follow: DTCFG[7:5] = 3’b0xx: DT value = DTCFG[7:0] * t_{DT}, $t_{DT} = t_{DTS}$. DTCFG[7:5] = 3’b10x: DT value = (64+DTCFG[5:0]) * t_{DT}, $t_{DT} = t_{DTS}$*2. DTCFG[7:5] = 3’b110: DT value = (32+DTCFG[4:0]) * t_{DT}, $t_{DT} = t_{DTS}$*8. DTCFG[7:5] = 3’b111: DT value = (32+DTCFG[4:0]) * t_{DT}, $t_{DT} = t_{DTS}$*16. This bit can be modified only when PROT[1:0] bit-field in TIMERx_CCHP register is 00.

Multi mode channel control register 0 (TIMERx_MCHCTL0)

Address offset: 0x48

Reset value: 0x0000 0000

This register has to be accessed by word (32-bit).

31	30	29	28	27	26	25	24	23	22	21	20	19	18	17	16
Reserved	MCH0MS[2]	Reserved													MCH0COMCTL[3] / Reserved
	rw														rw

15	14	13	12	11	10	9	8	7	6	5	4	3	2	1	0
Reserved								Reserved	MCH0COMCTL[2:0]			MCH0COMSEN	Reserved	MCH0MS[1:0]	
								MCH0CAPFLT[3:0]				MCH0CAPPSC[1:0]			
									rw			rw		rw	

Output compare mode:

Bits	Fields	Descriptions
31	Reserved	Must be kept at reset value.
30	MCH0MS[2]	Multi mode channel 0 I/O mode selection Refer to MCH0MS[1:0] description.
29:17	Reserved	Must be kept at reset value.
16	MCH0COMCTL[3]	Multi mode channel 0 compare output control. Refer to MCH0COMCTL[2:0] description.
15:7	Reserved	Must be kept at reset value.
6:4	MCH0COMCTL[2:0]	Multi mode channel 0 output compare control When multi mode channel 0 is configured in output mode, and the MCH0MSEL[1:0] = 2b'00, the MCH0COMCTL[3] and MCH0COMCTL[2:0] bit-field control the behavior of MO0CPRE which drives MCH0_O. The active level of MO0CPRE is high, while the active level of MCH0_O depends on MCH0FP[1:0] bits. **Note**: When multi mode channel 0 is configured in output mode, and the MCH0MSEL[1:0] = 2b'11, the CH0COMCTL[2:0] bit-field controls the behavior of O0CPRE which drives CH0_O and MCH0_O, while the active level of CH0_O and MCH0_O depends on CH0P and MCH0P bits. 0000: Timing mode. The MO0CPRE signal keeps stable, independent of the comparison between the register TIMERx_MCH0CV and the counter TIMERx_CNT. 0001: Set the channel output on match. MO0CPRE signal is forced high when the counter matches the output compare register TIMERx_MCH0CV. 0010: Clear the channel output on match. MO0CPRE signal is forced low when the counter matches the output compare register TIMERx_MCH0CV.

		0011: Toggle on match. MO0CPRE toggles when the counter matches the output compare register TIMERx_MCH0CV. 0100: Force low. MO0CPRE is forced low level. 0101: Force high. MO0CPRE is forced high level. 0110: PWM mode 0. When counting up, MO0CPRE is active as long as the counter is smaller than TIMERx_MCH0CV, otherwise it is inactive. When counting down, MO0CPRE is inactive as long as the counter is larger than TIMERx_MCH0CV, otherwise it is active. 0111: PWM mode 1. When counting up, MO0CPRE is inactive as long as the counter is smaller than TIMERx_MCH0CV, otherwise it is active. When counting down, MO0CPRE is active as long as the counter is larger than TIMERx_MCH0CV, otherwise it is inactive. 1000: Delayable SPM mode 0. The behavior of MO0CPRE is performed as in PWM mode 0. When counting up, the MO0CPRE is active. When a trigger event occurs, the MO0CPRE is inactive. The MO0CPRE is active again at the next update event; When counting down, the MO0CPRE is inactive, when a trigger event occurs, the O0CPR MO0CPRE E is active. The MO0CPRE is inactive again at the next update event. 1001: Delayable SPM mode 1. The behavior of MO0CPRE is performed as in PWM mode 1. When counting up, the MO0CPRE is inactive, when a trigger event occurs, the MO0CPRE is active. The MO0CPRE is inactive again at the next update event; When counting down, the MO0CPRE is active. When a trigger event occurs, the MO0CPRE is inactive. The MO0CPRE is active again at the next update event. 1010~1111: Reserved. If configured in PWM mode, the MO0CPRE level changes only when the output compare mode switches from “Timing” mode to “PWM” mode or the result of the comparison changes. When the outputs of CH0 and MCH0 are complementary, this bit-field is preloaded. If CCSE =1, this bit-field will only be updated when a channel commutation event is generated. This bit cannot be modified when PROT[1:0] bit-field in TIMERx_CCHP register is 11 and CH0NMS bit-field is 00(compare mode).
3	MCH0COMSEN	Multi mode channel 0 output compare shadow enable When this bit is set, the shadow register of TIMERx_MCH0CV register which updates at each update event will be enabled. 0: Multi mode channel 0 output compare shadow disabled 1: Multi mode channel 0 output compare shadow enabled The PWM mode can be used without validating the shadow register only in single pulse mode (SPM bit in TIMERx_CTL0 register is set). This bit cannot be modified when PROT[1:0] bit-field in TIMERx_CCHP register is 11 and MCH0MS bit-field is 00.
2	Reserved	Must be kept at reset value.

1:0	MCH0MS[1:0]	Multi mode channel 0 I/O mode selection This bit-field specifies the work mode of the channel and the input signal selection. This bit-field is writable only when the channel is not active (MCH0EN bit in TIMERx_CHCTL2 register is reset). 000: Multi mode channel 0 is configured as output. 001: Multi mode channel 0 is configured as input, MIS0 is connected to MCI0FEM0. 010: Reserved. 011: Multi mode channel 0 is configured as input, MIS0 is connected to ITS, this mode is working only if an internal trigger input is selected (through TSCFG15[4:0] bit-field in SYSCFG_TIMERxCFG2(x=14,40,41,42,43,44) register). 100: Multi mode channel 0 is configured as input, MIS0 is connected to CI0FEM0. 101~111: Reserved.

Input capture mode:

Bits	Fields	Descriptions
31	Reserved	Must be kept at reset value.
30	MCH0MS[2]	Multi mode channel 0 I/O mode selection Refer to MCH0MS[1:0] description.
29:8	Reserved	Must be kept at reset value.
7:4	MCH0CAPFLT[3:0]	Multi mode channel 0 input capture filter control. An event counter is used in the digital filter, in which a transition on the output occurs after N input events. This bit-field specifies the frequency used to sample MCI0 input signal and the length of the digital filter applied to MCI0. 0000: Filter disabled, $f_{SAMP}=f_{DTS}$, N=1. 0001: $f_{SAMP}=f_{CK_TIMER}$, N=2. 0010: $f_{SAMP}= f_{CK_TIMER}$, N=4. 0011: $f_{SAMP}= f_{CK_TIMER}$, N=8. 0100: $f_{SAMP}=f_{DTS}/2$, N=6. 0101: $f_{SAMP}=f_{DTS}/2$, N=8. 0110: $f_{SAMP}=f_{DTS}/4$, N=6. 0111: $f_{SAMP}=f_{DTS}/4$, N=8. 1000: $f_{SAMP}=f_{DTS}/8$, N=6. 1001: $f_{SAMP}=f_{DTS}/8$, N=8. 1010: $f_{SAMP}=f_{DTS}/16$, N=5. 1011: $f_{SAMP}=f_{DTS}/16$, N=6. 1100: $f_{SAMP}=f_{DTS}/16$, N=8. 1101: $f_{SAMP}=f_{DTS}/32$, N=5. 1110: $f_{SAMP}=f_{DTS}/32$, N=6. 1111: $f_{SAMP}=f_{DTS}/32$, N=8.

3:2	MCH0CAPPSC[1:0]	Multi mode channel 0 input capture prescaler This bit-field specifies the factor of the prescaler on channel 0 input. The prescaler is reset when MCH0EN bit in TIMERx_CHCTL2 register is cleared. 00: Prescaler disabled, capture is done on each channel input edge. 01: Capture is done every 2 channel input edges. 10: Capture is done every 4 channel input edges. 11: Capture is done every 8 channel input edges.
1:0	MCH0MS[1:0]	Multi mode channel 0 I/O mode selection Same as output compare mode

Multi mode channel control register 2 (TIMERx_MCHCTL2)

Address offset: 0x50

Reset value: 0x0000 0000

This register can be accessed by half-word(16-bit) or word(32-bit).

31	30	29	28	27	26	25	24	23	22	21	20	19	18	17	16
Reserved															

15	14	13	12	11	10	9	8	7	6	5	4	3	2	1	0
Reserved														MCH0FP[1:0]	
														rw	

Bits	Fields	Descriptions
31:2	Reserved	Must be kept at reset value.
1:0	MCH0FP[1:0]	Multi mode channel 0 capture/compare free polarity When multi mode channel 0 is configured in output mode, and the MCH0MSEL[1:0] = 2b'00, these bits specifie the multi mode channel 0 output signal polarity. 00: Multi mode channel 0 active high 01: Multi mode channel 0 active low 10: Reserved. 11: Reserved. When multi mode channel 0 is configured in input mode, these bits specifie the multi mode channel 0 input signal's polarity. MCH0FP[1:0] will select the active trigger or capture polarity for multi mode channel 0 input signals. 00: Multi mode channel 0 input signal's rising edge is the active signal for capture or trigger operation in slave mode. And multi mode channel 0 input signal will not be inverted. 01: Multi mode channel 0 input signal's falling edge is the active signal for capture or trigger operation in slave mode. And multi mode channel 0 input signal will be inverted. 10: Reserved. 11: Noninverted/both multi mode channel 0 input signal's edges.

This bit cannot be modified when PROT[1:0] bit-field in TIMERx_CCHP register is 11 or 10.

Multi mode channel 0 capture/compare value register (TIMERx_MCH0CV)

Address offset: 0x54

Reset value: 0x0000 0000

This register has to be accessed by word (32-bit).

31	30	29	28	27	26	25	24	23	22	21	20	19	18	17	16
Reserved															

15	14	13	12	11	10	9	8	7	6	5	4	3	2	1	0
MCH0VAL[15:0]															
rw															

Bits	Fields	Descriptions
31:16	Reserved	Must be kept at reset value.
15:0	MCH0VAL[15:0]	Capture/compare value of multi mode channel 0. When multi mode channel 0 is configured in input mode, this bit-field indicates the counter value at the last capture event. And this bit-field is read-only. When multi mode channel 0 is configured in output mode, this bit-field contains value to be compared to the counter. When the corresponding shadow register is enabled, the shadow register updates by every update event.

Channel 0 additional compare value register (TIMERx_CH0COMV_ADD)

Address offset: 0x64

Reset value: 0x0000 0000

This register has to be accessed by word (32-bit).

31	30	29	28	27	26	25	24	23	22	21	20	19	18	17	16
Reserved															

15	14	13	12	11	10	9	8	7	6	5	4	3	2	1	0
CH0COMVAL_ADD[15:0]															
rw															

Bits	Fields	Descriptions
31:16	Reserved	Must be kept at reset value.
15:0	CH0COMVAL_ADD [15:0]	Additional compare value of channel 0 When channel 0 is configured in output mode, this bit-field contains value to be compared to the counter. When the corresponding shadow register is enabled, the

shadow register updates by every update event.

Note: This register just used in composite PWM mode(when CH0CPWMEN=1).

Channel 1 additional compare value register (TIMERx_CH1COMV_ADD)

Address offset: 0x68

Reset value: 0x0000 0000

This register has to be accessed by word (32-bit).

31	30	29	28	27	26	25	24	23	22	21	20	19	18	17	16
Reserved															

15	14	13	12	11	10	9	8	7	6	5	4	3	2	1	0
CH1COMVAL_ADD[15:0]															
rw															

Bits	Fields	Descriptions
31:16	Reserved	Must be kept at reset value.
15:0	CH1COMVAL_ADD [15:0]	Additional compare value of channel 1 When channel 1 is configured in output mode, this bit-field contains value to be compared to the counter. When the corresponding shadow register is enabled, the shadow register updates by every update event. **Note:** This register just used in composite PWM mode(when CH0CPWMEN=1).

Control register 2 (TIMERx_CTL2)

Address offset: 0x74

Reset value: 0x0030 0000

This register has to be accessed by word (32-bit).

31	30	29	28	27	26	25	24	23	22	21	20	19	18	17	16
Reserved		CH1C PWMEN	CH0C PWMEN	Reserved						MCH0MSEL[1:0]		Reserved			
		rw	rw							rw					

15	14	13	12	11	10	9	8	7	6	5	4	3	2	1	0
Reserved				CH1OMPSEL[1:0]		CH0OMPSEL[1:0]		Reserved							
				rw		rw									

Bits	Fields	Descriptions
31:30	Reserved	Must be kept at reset value.
29	CH1CPWMEN	Channel 1 composite PWM mode enable 0: Disabled

		1: Enabled
28	CH0CPWMEN	Channel 0 composite PWM mode enable 0: Disabled 1: Enabled
27:22	Reserved	Must be kept at reset value.
21:20	MCH0MSEL[1:0]	Multi mode channel 0 mode select 00: Independent mode, MCH0 is independent of CH0 01: Reserved 10: Reserved 11: Complementary mode, only the CH0 is valid for input, and the outputs of MCH0 and CH0 are complementary
19:12	Reserved	Must be kept at reset value.
11:10	CH1OMPSEL[1:0]	Channel 1 output match pulse select When the match events occur, this bit is used to select the output of O1CPRE which drives CH1_O. 00: The O1CPRE signal is output normal with the configuration of CH1COMCTL[2:0] bits. 01: Only when the counter is counting up, the O1CPRE signal is output a pulse when the match events occurs, and the pulse width is one CK_TIMER clock cycle. 10: Reserved 11: Reserved
9:8	CH0OMPSEL[1:0]	Channel 0 output match pulse select When the match events occur, this bit is used to select the output of O0CPRE which drives CH0_O. 00: The O0CPRE signal is output normal with the configuration of CH0COMCTL[2:0] bits. 01: Only when the counter is counting up, the O0CPRE signal is output a pulse when the match events occurs, and the pulse width is one CK_TIMER clock cycle. 10: Reserved 11: Reserved
7:0	Reserved	Must be kept at reset value.

TIMERx alternate function control register 0 (TIMERx_AFCTL0)

Address offset: 0x8C

Reset value: 0x0000 0001

This register has to be accessed by word (32-bit).

31	30	29	28	27	26	25	24	23	22	21	20	19	18	17	16

Reserved	BRK0CMP1P	BRK0CMP0P	Reserved	BRK0IN0P
	rw	rw		rw

15	14	13	12	11	10	9	8	7	6	5	4	3	2	1	0
Reserved					BRK0CMP1EN	BRK0CMP0EN	BRK0HPDFEN	Reserved							BRK0IN0EN
					rw	rw	rw								rw

Bits	Fields	Descriptions
31:27	Reserved	Must be kept at reset value.
26	BRK0CMP1P	BREAK0 CMP1 input polarity This bit is used to configure the CMP1 input polarity, and the specific polarity is determined by this bit and the BRK0P bit. 0: CMP1 input signal will not be inverted (BRK0P =0, the input signal is active low; BRK0P =1, the input signal is active high) 1: CMP1 input signal will be inverted (BRK0P=0, the input signal is active high; BRK0P =1, the input signal is active low) This bit can be modified only when PROT[1:0] bit-field in TIMERx_CCHP register is 00.
25	BRK0CMP0P	BREAK0 CMP0 input polarity This bit is used to configure the CMP0 input polarity, and the specific polarity is determined by this bit and the BRK0P bit. 0: CMP0 input signal will not be inverted (BRK0P =0, the input signal is active low; BRK0P =1, the input signal is active high) 1: CMP0 input signal will be inverted (BRK0P=0, the input signal is active high; BRK0P =1, the input signal is active low) This bit can be modified only when PROT[1:0] bit-field in TIMERx_CCHP register is 00.
24:17	Reserved	Must be kept at reset value.
16	BRK0IN0P	BREAK0 BRKIN0 alternate function input polarity This bit is used to configure the BRKIN0 input polarity, and the specific polarity is determined by this bit and the BRK0P bit. 0: BRKIN0 input signal will not be inverted (BRK0P =0, the input signal is active low; BRK0P =1, the input signal is active high) 1: BRKIN0 input signal will be inverted (BRK0P=0, the input signal is active high; BRK0P =1, the input signal is active low) This bit can be modified only when PROT[1:0] bit-field in TIMERx_CCHP register is 00.
15:11	Reserved	Must be kept at reset value.
10	BRK0CMP1EN	BREAK0 CMP1 enable

		0: CMP1 input disabled 1: CMP1 input enabled This bit can be modified only when PROT[1:0] bit-field in TIMERx_CCHP register is 00.
9	BRK0CMP0EN	BREAK0 CMP0 enable 0: CMP0 input disabled 1: CMP0 input enabled This bit can be modified only when PROT[1:0] bit-field in TIMERx_CCHP register is 00.
8	BRK0HPDFEN	BREAK0 HPDF input(hpdf_break[x], please refer to ***Table 45-2. HPDF internal signal***) enable 0: HPDF input disabled 1: HPDF input enabled This bit can be modified only when PROT[1:0] bit-field in TIMERx_CCHP register is 00.
7:1	Reserved	Must be kept at reset value.
0	BRK0IN0EN	BREAK0 BRKIN0 alternate function input enable 0: BRKIN0 alternate function input disabled 1: BRKIN0 alternate function input enabled This bit can be modified only when PROT[1:0] bit-field in TIMERx_CCHP register is 00.

Counter repetition register 1 (TIMERx_CREP1)

Address offset: 0x98

Reset value: 0x0000 0000

This register has to be accessed by word (32-bit).

31	30	29	28	27	26	25	24	23	22	21	20	19	18	17	16
CREP1[31:16]															
rw															

15	14	13	12	11	10	9	8	7	6	5	4	3	2	1	0
CREP1[15:0]															
rw															

Bits	Fields	Descriptions
31:0	CREP1[31:0]	Counter repetition value 1 This bit-field is 32 bits and can be read on the fly. This bit-field specifies the update event generation rate. Each time the repetition counter counts down to zero, an update event will be generated. The update rate of the shadow registers is also affected by this bit-field when these shadow registers are enabled.

Note: This bit-field just used with CREPSEL =1(in TIMERx_CFG register).

DMA configuration register (TIMERx_DMACFG)

Address offset: 0xE0

Reset value: 0x0000 0000

This register has to be accessed by word (32-bit).

31	30	29	28	27	26	25	24	23	22	21	20	19	18	17	16
Reserved															

15	14	13	12	11	10	9	8	7	6	5	4	3	2	1	0
Reserved		DMATC[5:0]						Reserved		DMATA[5:0]					
		rw								rw					

Bits	Fields	Descriptions
31:14	Reserved	Must be kept at reset value.
13:8	DMATC[5:0]	DMA transfer count This field defines the times of accessing(R/W) the TIMERx_DMATB register by DMA. 6'b000000: transfer 1 time 6'b000001: transfer 2 times … 6'b100101: transfer 38 times
7:6	Reserved	Must be kept at reset value.
5:0	DMATA[5:0]	DMA transfer access start address This field defines the start address of accessing the TIMERx_DMATB register by DMA. When the first access to the TIMERx_DMATB register is done, this bit-field specifies the address just accessed. And then the address of the second access to the TIMERx_DMATB register will be (start address + 0x4). 6'b000000: TIMERx_CTL0 6'b000001: TIMERx_CTL1 … In a word: start address = TIMERx_CTL0 + DMATA*4

DMA transfer buffer register (TIMERx_DMATB)

Address offset: 0xE4

Reset value: 0x0000 0000

This register has to be accessed by word (32-bit).

31	30	29	28	27	26	25	24	23	22	21	20	19	18	17	16

DMATB[31:16]
rw

15	14	13	12	11	10	9	8	7	6	5	4	3	2	1	0
DMATB[15:0]															
rw															

Bits	Fields	Descriptions
31:0	DMATB[31:0]	DMA transfer buffer When a read or write operation is assigned to this register, the register located at the address ranges from (start address) to (start address + transfer count * 4) will be accessed. The transfer count is calculated by hardware, and ranges from 0 to DMATC.

Configuration register (TIMERx_CFG)

Address offset: 0xFC

Reset value: 0x0000 0000

This register has to be accessed by word (32-bit).

31	30	29	28	27	26	25	24	23	22	21	20	19	18	17	16
Reserved															

15	14	13	12	11	10	9	8	7	6	5	4	3	2	1	0
Reserved												CCUSEL	CREPSEL	CHVSEL	OUTSEL
												rw	rw	rw	rw

Bits	Fields	Descriptions
31:4	Reserved	Must be kept at reset value.
3	CCUSEL	Commutation control shadow register update select This bit is valid only when the CCUC[2:0] bit-field are set to 100. 0: The shadow registers update when the counter generates an overflow/ underflow event. 1: The shadow registers update when the counter generates an overflow/ underflow event and the repetition counter value is zero.
2	CREPSEL	The counter repetition register select This bit is used to select the counter repetition register. 0: The update event rate is depended to TIMERx_CREP0 register 1: The update event rate is depended to TIMERx_CREP1 register
1	CHVSEL	Write CHxVAL register selection bit This bit-field is set and reset by software. 1: If the value to be written to the CHxVAL register is the same as the value of CHxVAL register, the write access is ignored.

		0: No effect.
0	OUTSEL	The output value selection bit This bit-field is set and reset by software. 1: If POEN bit and IOS bit are 0, the output is disabled. 0: No effect.

24.4. General level4 timer (TIMERx, x=15,16)

24.4.1. Overview

The general level4 timer module (TIMER15/16) is a two-channel timer that supports both input capture and output compare. They can generate PWM signals to control motor or be used for power management applications. The general level4 timer has a 16-bit counter that can be used as an unsigned counter.

In addition, the general level4 timers can be programmed and be used for counting, their external events can be used to drive other timers.

Timer also includes a dead-time Insertion module which is suitable for motor control applications.

24.4.2. Characteristics

- Total channel num: 2.
- Counter width: 16-bit.
- Source of counter clock: internal clock.
- Counter modes: count up only.
- Programmable prescaler: 16-bit. The factor can be changed on the go.
- Each channel is user-configurable: input capture mode, output compare mode, programmable PWM mode, single pulse mode.
- Programmable dead time insertion.
- Auto reload function.
- Programmable counter repetition function.
- Break input function: BREAK0.
- Interrupt output or DMA request: update, compare/capture event, and break input.

24.4.3. Block diagram

Figure 24-109. General level4 timer block diagram provides details of the internal

configuration of the general level4 timer.

Figure 24-109. General level4 timer block diagram

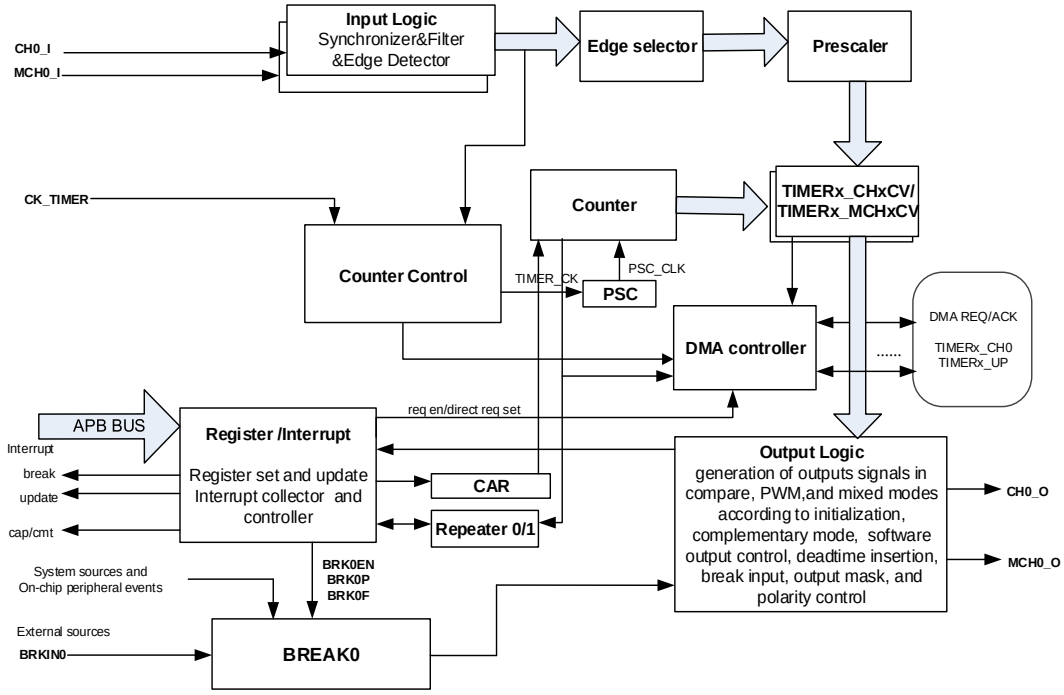

24.4.4. Function overview

Clock selection

The general level4 TIMER can only being clocked by the CK_TIMER.

- Internal timer clock CK_TIMER which is from module RCU

The general level4 TIMER has only one clock source which is the internal CK_TIMER, used to drive the counter prescaler. When the CEN is set, the CK_TIMER will be divided by PSC value to generate PSC_CLK.

The TIMER_CK, driven counter's prescaler to count, is equal to CK_TIMER which is from RCU

Figure 24-110. Normal mode, internal clock divided by 1

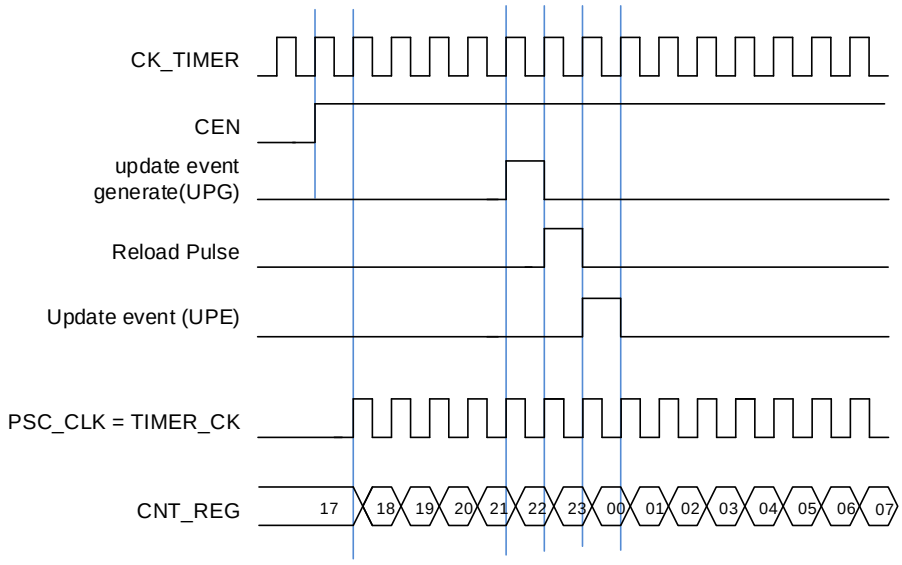

Prescaler

The prescaler can divide the timer clock (TIMER_CK) to a counter clock (PSC_CLK) by any factor between 1 and 65536. It is controlled by prescaler register (TIMERx_PSC) which can be changed on the go but is taken into account at the next update event.

Figure 24-111. Counter timing diagram with prescaler division change from 1 to 2

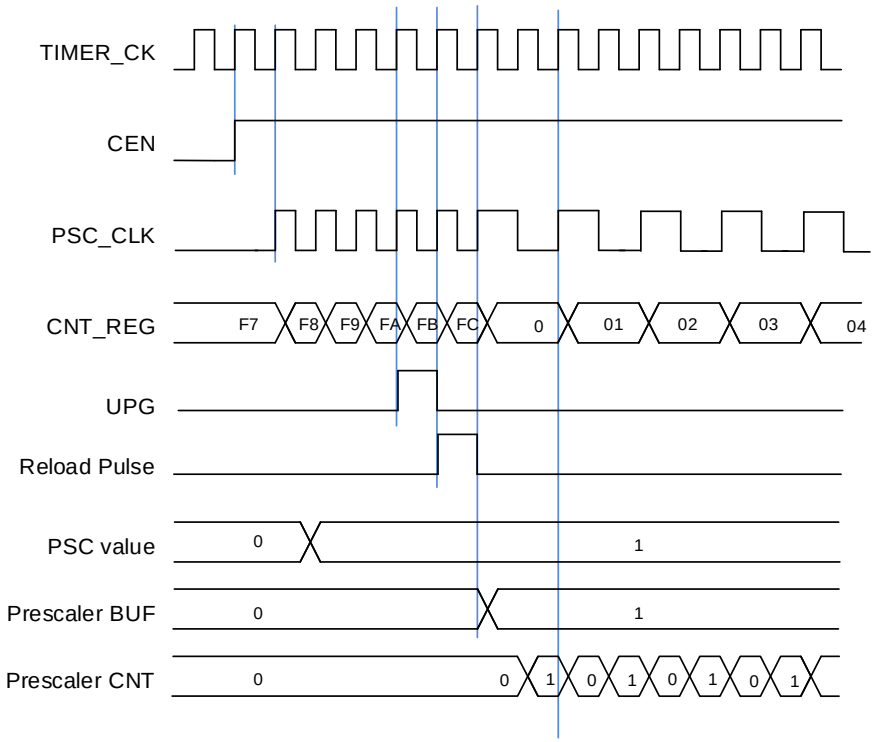

Up counting mode

In this mode, the counter counts up continuously from 0 to the counter-reload value, which is defined in the TIMERx_CAR register, in a count-up direction. Once the counter reaches the counter reload value, the counter restarts from 0. If the repetition counter is set, the update events will be generated after (TIMERx_CREP0/1+1) times of overflow. Otherwise the update event is generated each time when overflows. The counting direction bit DIR in the TIMERx_CTL0 register should be set to 0 for the up counting mode.

Whenever, if the update event software trigger is enabled by setting the UPG bit in the TIMERx_SWEVG register, the counter value will be initialized to 0 and generates an update event.

If set the UPDIS bit in TIMERx_CTL0 register, the update event is disabled.

When an update event occurs, all the registers (repetition counter, auto reload register, prescaler register) are updated.

Figure 24-112. Timing diagram of up counting mode, PSC=0/2 and *Figure 24-113. Timing diagram of up counting mode, change TIMERx_CAR on the go* show some examples of the counter behavior for different clock prescaler factor when TIMERx_CAR=0x99.

Figure 24-112. Timing diagram of up counting mode, PSC=0/2

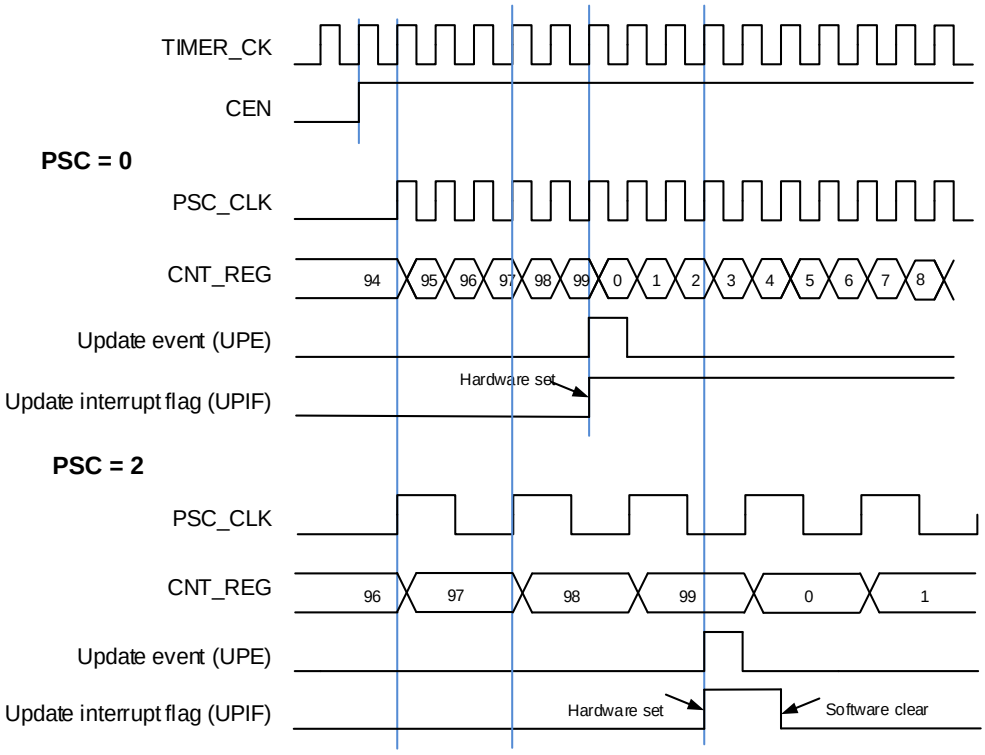

Figure 24-113. Timing diagram of up counting mode, change TIMERx_CAR on the go

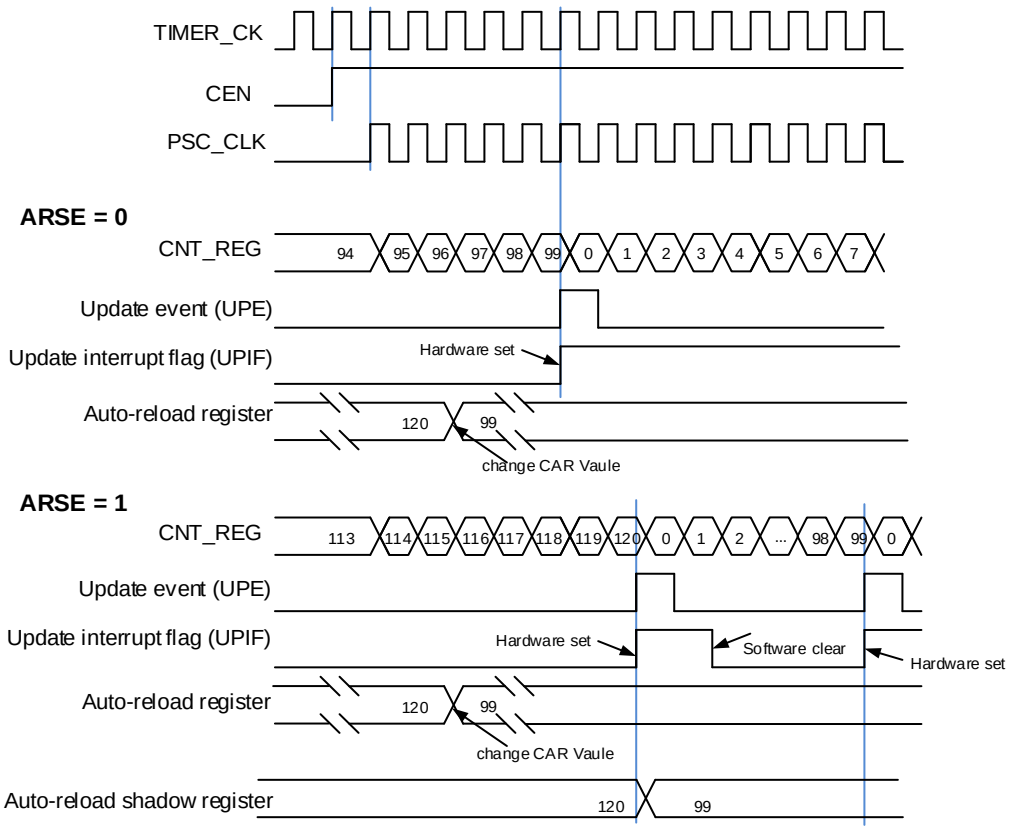

Counter repetition

The general timer has two repetitions counter TIMERx_CREP0/1, which can be selected by configuring the CPERSEL bit in the TIMERx_CFG register. The CPEP[7:0] bit-field is 8bits, the CPEP[31:0] bit-field is 32bits and can be read on the fly.

Counter repetition is used to generator update event or updates the timer registers only after a given number (N+1) of cycles of the counter, where N is CREP0/1 in TIMERx_CREP0/1 register. The repetition counter is decremented at each counter overflow in up-counting mode.

Setting the UPG bit in the TIMERx_SWEVG register will reload the content of CREP0/1 in TIMERx_CREP0/1 register and generator an update event.

Figure 24-114. Repetition timechart for up-counter

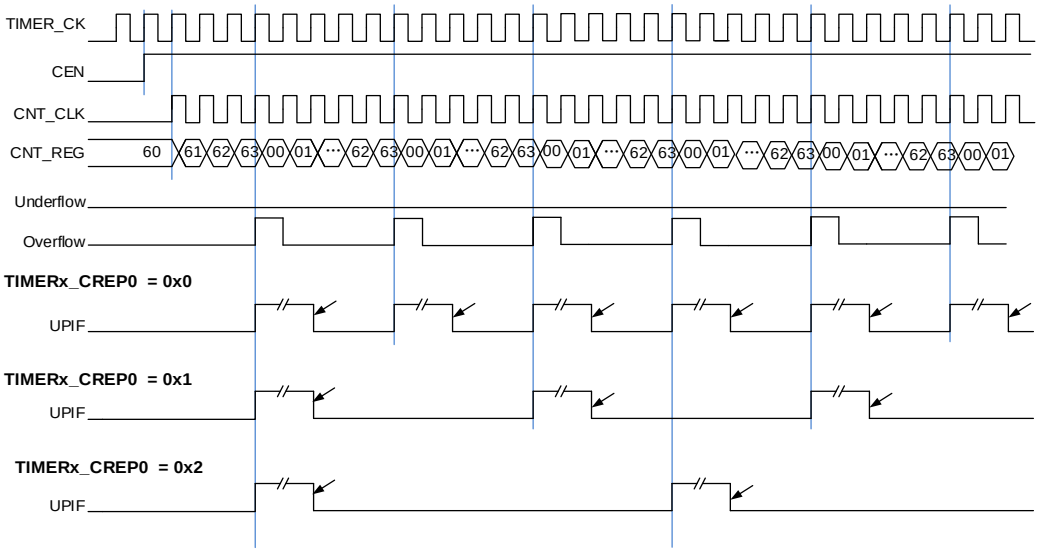

Capture/compare channels

The general level4 timer has two independent channels which can be used as capture inputs or compare match outputs. Each channel is built around a channel capture compare register including an input stage, channel controller and an output stage.

When the channels are used for input, channel 0 and multi mode channel 0 can perform input capture independently; when the channels are used for comparison output, the channel 0 and multi mode channel 0 can output independent and complementary outputs.

- **Input capture mode**

When MCHxMSEL=2’b00(independent mode), channel x and multi mode channel x can perform input capture independently.

Input capture mode allows the channel to perform measurements such as pulse timing, frequency, period, duty cycle and so on. The input stage consists of a digital filter, a channel polarity selection, edge detection and a channel prescaler. When a selected edge occurs on the channel input, the current value of the counter is captured into the TIMERx_CHxCV/ TIMERx_MCHxCV(x=0) registers, at the same time the CHxIF/ MCHxIF(x=0) bits are set and the channel interrupt is generated if it is enabled when CHxIE/ MCHxIE =1(x=0).

Figure 24-115. Input capture logic for channel 0

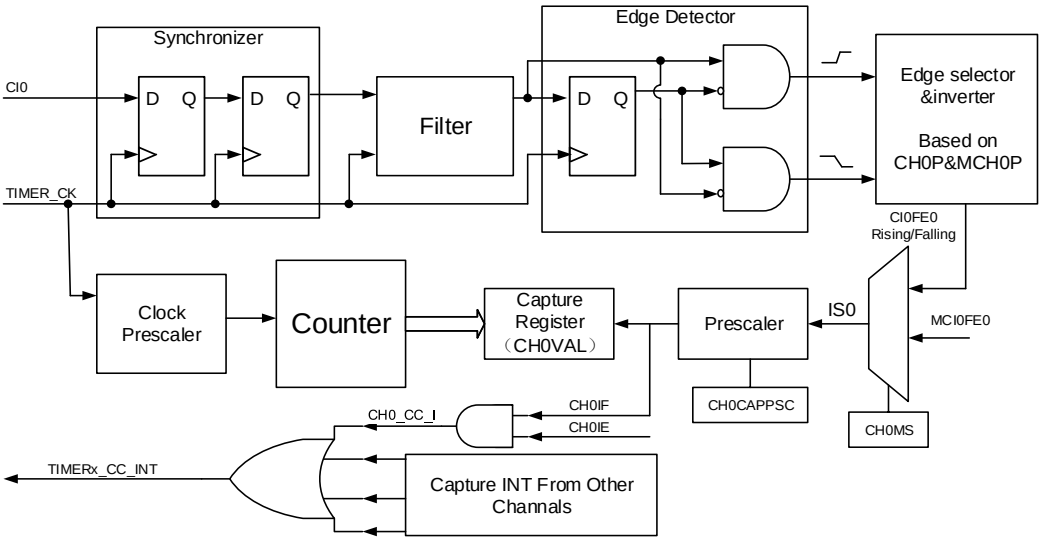

Figure 24-116. Input capture logic for multi mode channel 0

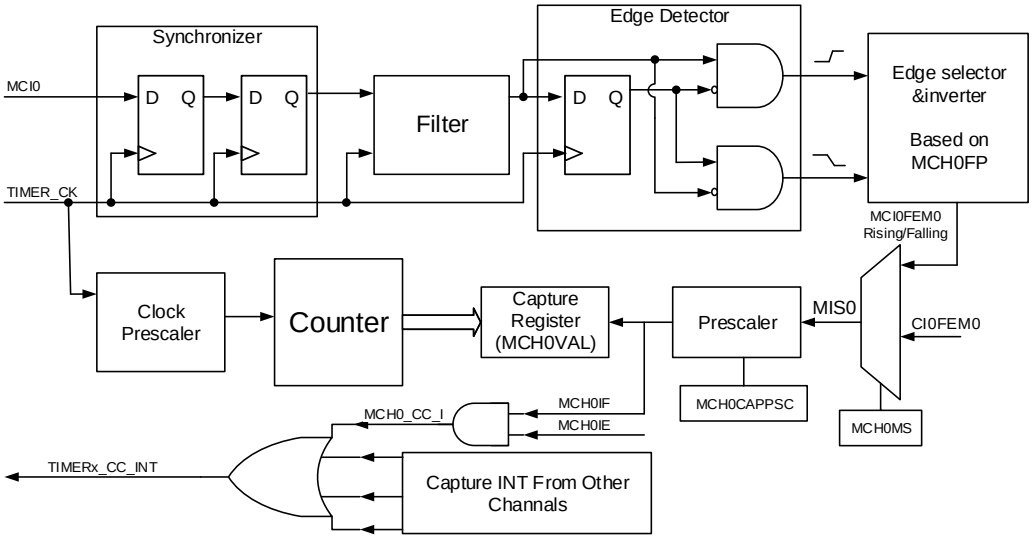

The input signals of channelx (CIx/ MCIx) are the TIMERx_CHx/ TIMERx_MCHxCV signal.

First, the input signal of channel (CIx/ MCIx) is synchronized to TIMER_CK signal, and then sampled by a digital filter to generate a filtered input signal. Then through the edge detector, the rising or falling edge is detected by configuring CHxP/ MCHxP or MCHxFP bits. The input capture signal can also be selected from the input signal of other channel or the internal trigger signal by configuring CHxMS/ MCHxMS bits. The IC prescaler makes several input events generate one effective capture event. On the capture event, TIMERx_CHxCV/ TIMERx_MCHxCV will store the value of counter.

So, the process can be divided into several steps as below:

Step1: Filter configuration (CHxCAPFLT bit in TIMERx_CHCTL0 register and MCHxCAPFLT bit in TIMERx_MCHCTL0 register).

Based on the input signal and quality of requested signal, configure compatible CHxCAPFLT or MCHxCAPFLT bit.

Step2: Edge selection (CHxP and MCHxP bits in TIMERx_CHCTL2 register, MCHxFP[1:0] bits in TIMERx_MCHCTL2 register).

Rising edge or falling edge, choose one by configuring CHxP and MCHxP bits or MCHxFP[1:0] bits.

Step3: Capture source selection (CHxMS bit in TIMERx_CHCTL0 register, MCHxMS bit in TIMERx_MCHCTL0 register).

As soon as selecting one input capture source by CHxMS, the channel must be set to input mode (CHxMS! =0x000 or MCHxMS != 0x000) and TIMERx_CHxCV/ TIMERx_MCHxCV cannot be written any more.

Step4: Interrupt enable (CHxIE and CHxDEN bits, MCHxIE and MCHxDEN bits in TIMERx_DMAINTEN).

Enable the related interrupt to get the interrupt and DMA request.

Step5: Capture enable (CHxEN and MCHxEN bits in TIMERx_CHCTL2).

Result: When the wanted input signal is captured, TIMERx_CHxCV/ TIMERx_MCHxCV will be set by counter's value and CHxIF/ MCHxIF bit is asserted. If the CHxIF/ MCHxIF bit is 1, the CHxOF/ MCHxOF bit will also be asserted. The interrupt and DMA request will be asserted or not based on the configuration of CHxIE and CHxDEN bits, MCHxIE and MCHxDEN bits in TIMERx_DMAINTEN.

Direct generation: A DMA request or interrupt is generated by setting CHxG directly.

■ Output compare mode

Figure 24-117. Output compare logic (when MCHxMSEL = 2'00, x=0) and *Figure 24-118. Output compare logic (when MCHxMSEL = 2'11, x=0)* show the logic circuit of output compare mode.

Figure 24-117. Output compare logic (when MCHxMSEL = 2'00, x=0)

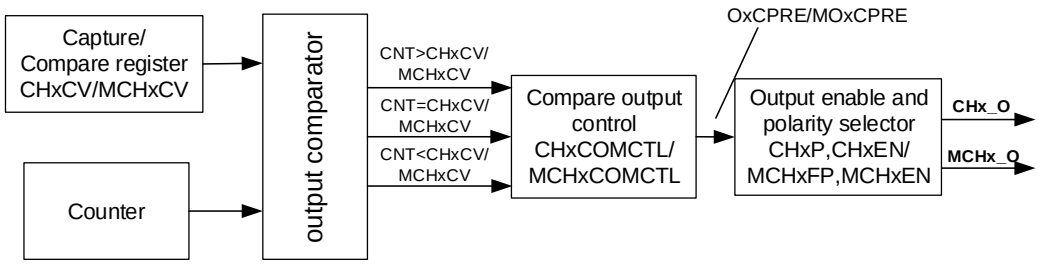

Figure 24-118. Output compare logic (when MCHxMSEL = 2'11, x=0)

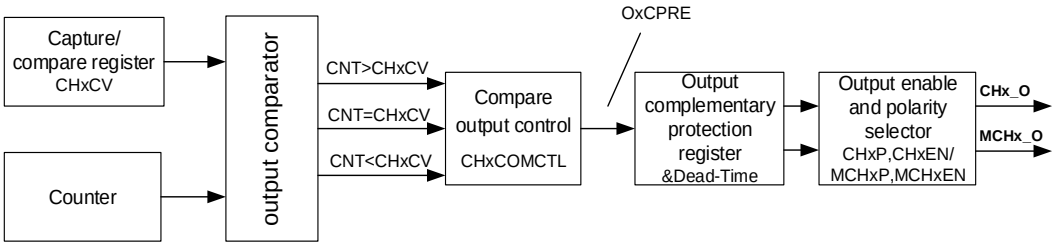

The relationship between the channel output signal CHx_O/MCHx_O and the OxCPRE/ MOxCPRE signal (more details refer to ***Channel output prepare signal***) is described as blew(the active level of OxCPRE is high and the active level of MOxCPRE is high).

- When MCHxMSEL=2'b00 (in TIMERx_CTL2 register), the MCHx_O output is independent from the CHx_O output. The output level of CHx_O depends on OxCPRE signal, CHxP bit and CHxEN bit (please refer to the TIMERx_CHCTL2 register for more details). The output level of MCHx_O depends on MOxCPRE signal, MCHxFP[1:0] bits and MCHxEN bit (please refer to the TIMERx_MCHCTL2 and TIMERx_CHCTL2 registers for more details). Please refer to ***Figure 24-117. Output compare logic (when MCHxMSEL = 2'00, x=0)***.
- When MCHxMSEL=2'b11, the MCHx_O output is the inverse of the CHx_O output. The output level of CHx_O/MCHx_O depends on OxCPRE signal, CHxP/ MCHxP bits and CHxEN/MCHxEN bits. Please refer to ***Figure 24-118. Output compare logic (when MCHxMSEL = 2'11, x=0)***.

For examples (the MCHx_O output is independent from the CHx_O output):

5) Configure CHxP=0 (the active level of CHx_O is high, the same as OxCPRE), CHxEN=1 (the output of CHx_O is enabled):
   If the output of OxCPRE is active(high) level, the output of CHx_O is active(high) level;
   If the output of OxCPRE is inactive(low) level, the output of CHx_O is active(low) level.

6) Configure MCHxP=1 (the active level of MCHx_O is low, contrary to MOxCPRE), MCHxEN=1 (the output of MCHx_O is enabled):
   If the output of MOxCPRE is active(high) level, the output of MCHx_O is active(low) level;
   If the output of MOxCPRE is inactive(low) level, the output of MCHx_O is active(high) level.

When MCHxMSEL=2'b11 and CHx_O and MCHx_O are output at the same time, the specific outputs of CHx_O and MCHx_O are related to the relevant bits (ROS, IOS, POE and DTCFG bits) in the TIMERx_CCHP register. Please refer to ***Outputs complementary*** for more details.

In output compare mode, the TIMERx can generate timed pulses with programmable position, polarity, duration and frequency. When the counter matches the value in the TIMERx_CHxCV/ TIMERx_MCHxCV register of an output compare channel, the channel (n) output can be set, cleared, or toggled based on CHxCOMCTL/ MCHxCOMCTL. When the

counter reaches the value in the TIMERx_CHxCV/ TIMERx_MCHxCV register, the CHxIF/ MCHxIF bit will be set and the channel (n) interrupt is generated if CHxIE/ MCHxIE = 1. And the DMA request will be asserted, if CHxDEN/ MCHxDEN =1.

So, the process can be divided into several steps as below:

Step1: Clock Configuration. Such as clock source, clock prescaler and so on.

Step2: Compare mode configuration.

- Set the shadow enable mode by CHxCOMSEN/ MCHxCOMSEN.
- Set the output mode (set/clear/toggle) by CHxCOMCTL/ MCHxCOMCTL.
- Select the active polarity by CHxP/MCHxP/ MCHxFP.
- Enable the output by CHxEN/ MCHxEN.

Step3: Interrupt/DMA request enable configuration by CHxIE/ MCHxIE /CHxDEN/ MCHxDEN.

Step4: Compare output timing configuration by TIMERx_CAR and TIMERx_CHxCV/ TIMERx_MCHxCV.

The TIMERx_CHxCV/ TIMERx_MCHxCV can be changed onging to meet the expected waveform.

Step5: Start the counter by configuring CEN to 1.

Figure 24-119. Output-compare in three modes shows the three compare modes: toggle/set/clear. CARL=0x63, CHxVAL=0x3.

Figure 24-119. Output-compare in three modes

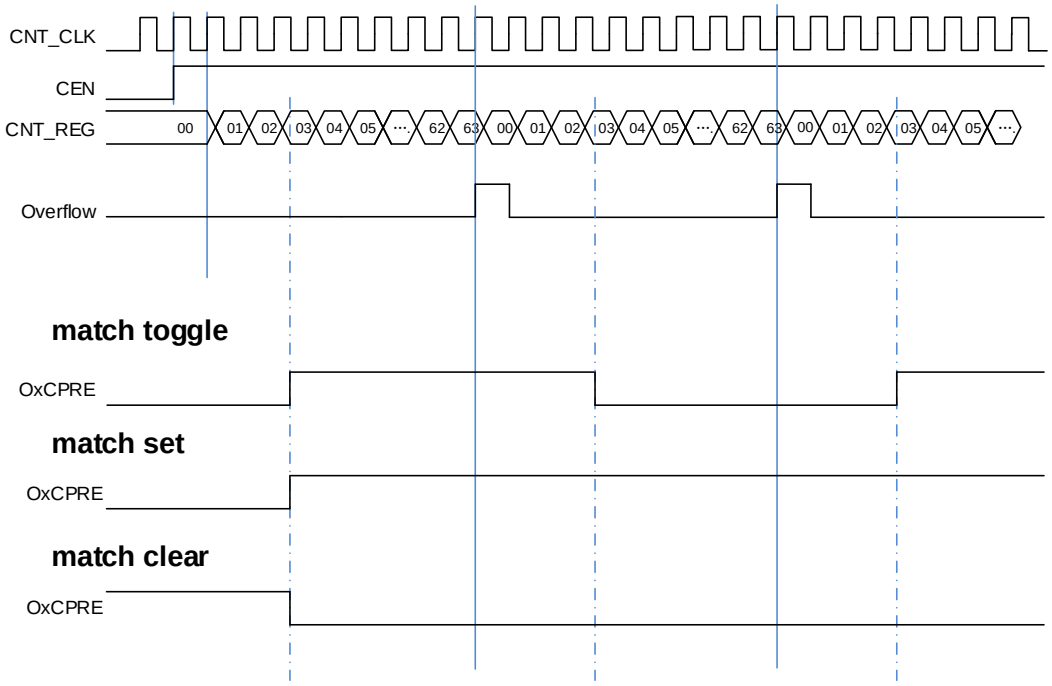

PWM mode

In the PWM output mode (by setting the CHxCOMCTL/ MCHxCOMCTL bit to 4'b0110 (PWM mode 0) or to 4'b0111(PWM mode 1)), the channel can generate PWM waveform according to the TIMERx_CAR registers and TIMERx_CHxCV/ TIMERx_MCHxCV registers.

The EAPWM's period is determined by TIMERx_CAR and the duty cycle is determined by TIMERx_CHxCV/ TIMERx_MCHxCV. ***Figure 24-120. PWM mode timechart*** shows the EAPWM output and interrupts waveform.

In up counting mode, if the value of TIMERx_CHxCV/ TIMERx_MCHxCV is greater than the value of TIMERx_CAR, the output will be always active in PWM mode 0 (CHxCOMCTL/ MCHxCOMCTL =4'b0110). And if the value of TIMERx_CHxCV/ TIMERx_MCHxCV is greater than the value of TIMERx_CAR, the output will be always inactive in PWM mode 1 (CHxCOMCTL/ MCHxCOMCTL =4'b0111).

Figure 24-120. PWM mode timechart

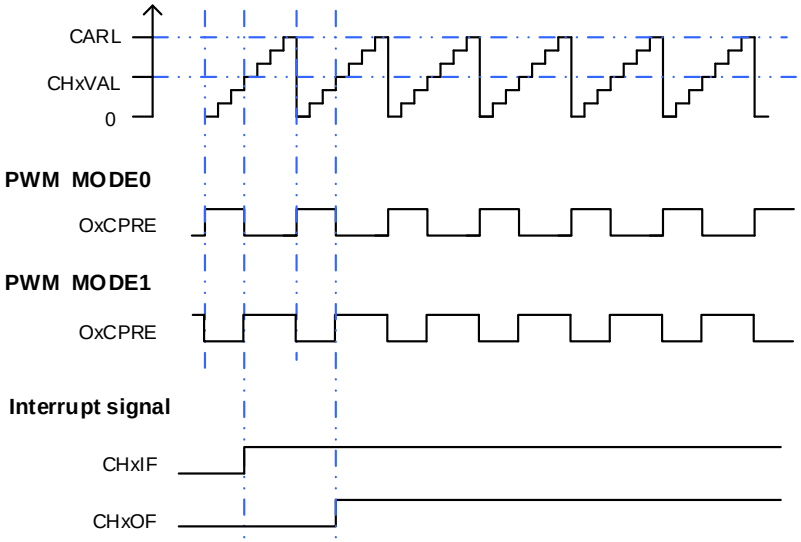

Channel output prepare signal

As is shown in ***Figure 24-117. Output compare logic (when MCHxMSEL = 2'00, x=0)*** and ***Figure 24-118. Output compare logic (when MCHxMSEL = 2'11, x=0)***, when TIMERx is configured in compare match output mode, a middle signal named OxCPRE or MOxCPRE (channel x output or multi mode channel x output prepare signal) will be generated before the channel outputs signal.

The OxCPRE and MOxCPRE signal have several types of output function. The OxCPRE signal type is defined by configuring the CHxCOMCTL bit and the MOxCPRE signal type is defined by configuring the MCHxCOMCTL bit.

Take OxCPRE as an example for description below, these include keeping the original level by configuring the CHxCOMCTL field to 0x00, setting to high by configuring the CHxCOMCTL field to 0x01, setting to low by configuring the CHxCOMCTL field to 0x02 or toggling signal by configuring the CHxCOMCTL field to 0x03 when the counter value matches the content of the TIMERx_CHxCV register.

The PWM mode 0/ PWM mode 1 output is another output type of OxCPRE which is setup by configuring the CHxCOMCTL field to 0x06/0x07. In these modes, the OxCPRE signal level is changed according to the counting direction and the relationship between the counter value

and the TIMERx_CHxCV content. Refer to the definition of relative bit for more details.

Another special function of the OxCPRE signal is forced output which can be achieved by configuring the CHxCOMCTL field to 0x04/ 0x05. The output can be forced to an inactive/active level irrespective of the comparison condition between the values of the counter and the TIMERx_CHxCV.

Configure the CHxCOMCEN bit to 1 in the TIMERx_CHCTL0 register, the OxCPRE signal can be forced to 0 when the ETIFP signal derived from the external ETI pin is set to a high level. The OxCPRE signal will not return to its active level until the next update event occurs.

Outputs complementary

The outputs of CHx_O and MCHx_O have two situations:

- MCHxMSEL=2'b00: The MCHx_O output is independent from the CHx_O output;
- MCHxMSEL=2'b11: The outputs of MCHx_O and CHx_O are complementary and the MCHxOMCTL bits are not used in the generation of the MCHx_O output.

Function of complementary is for a pair of channels, CHx_O and MCHx_O, the two output signals cannot be active at the same time. TIMERx's one pair of channel has this function. The complementary signals CHx_O and MCHx_O are controlled by a group of parameters: the CHxEN and MCHxEN bits in the TIMERx_CHCTL2 register, the POEN, ROS and IOS bits in the TIMERx_CCHP register, ISOx and ISOxN bits in the TIMERx_CTL1 register. The output polarity is determined by CHxP and MCHxP bits in the TIMERx_CHCTL2 register.

When the the outputs of CHx_O and MCHx_O are complementary, there are three situations: output enable、output off-state and output disabled. The details are shown in ***Table 24-18. Complementary outputs controlled by parameters (MCHxMSEL =2'b11)***.

Table 24-18. Complementary outputs controlled by parameters (MCHxMSEL =2'b11)

<table>
<tr><th colspan="5">Complementary Parameters</th><th colspan="2">Output Status</th></tr>
<tr><th>POEN</th><th>ROS</th><th>IOS</th><th>CHxEN</th><th>MCHxEN</th><th>CHx_O</th><th>MCHx_O</th></tr>
<tr><td rowspan="4">0</td><td rowspan="4">0/1</td><td rowspan="3">0</td><td rowspan="2">0</td><td>0</td><td colspan="2">CHx_O / CHx_ON = LOW
CHx_O / CHx_ON output disable(1).</td></tr>
<tr><td>1</td><td colspan="2" rowspan="3">CHx_O/ CHx_ON output "off-state" (2):
the CHx_O/ CHx_ON output inactive level firstly: CHx_O = CHxP, CHx_ON = CHxNP; If the clock for deadtime generator is present, after a deadtime: CHx_O = ISOx, CHx_ON = ISOxN. (3)</td></tr>
<tr><td rowspan="2">1</td><td>0</td></tr>
<tr><td>1</td></tr>
<tr><td>1</td><td>x</td><td>x</td><td colspan="2">CHx_O/ CHx_ON output "off-state":
the CHx_O/ CHx_ON output inactive level firstly: CHx_O = CHxP, CHx_ON = CHxNP; If the clock for deadtime generator is present, after a deadtime: CHx_O = ISOx, CHx_ON = ISOxN.</td></tr>
<tr><td>1</td><td>0</td><td>0/1</td><td>0</td><td>0</td><td colspan="2">CHx_O/MCHx_O = LOW
CHx_O/MCHx_O output disable.</td></tr>
</table>

Complementary Parameters					Output Status	
POEN	ROS	IOS	CHxEN	MCHxEN	CHx_O	MCHx_O
				1	CHx_O = LOW CHx_O output disable.	MCHx_O=OxCPRE⊕(4)MCHxP MCHx_O output enable.
			1	0	CHx_O=OxCPRE⊕CHxP CHx_O output enable.	MCHx_O = LOW MCHx_O output disable.
				1	CHx_O=OxCPRE⊕CHxP CHx_O output enable.	MCHx_O = (! OxCPRE)(5)⊕MCHxP. MCHx_O output enable.
	1		0	0	CHx_O = CHxP CHx_O output “off-state”.	MCHx_O = MCHxP MCHx_O output “off-state”.
				1	CHx_O = CHxP CHx_O output “off-state”	MCHx_O=OxCPRE⊕MCHxP MCHx_O output enable
			1	0	CHx_O=OxCPRE⊕CHxP CHx_O output enable	MCHx_O = MCHxP MCHx_O output “off-state”.
				1	CHx_O=OxCPRE⊕CHxP CHx_O output enable	MCHx_O = (! OxCPRE)⊕MCHxP MCHx_O output enable.

Note:

(1) output disable: the CHx_O / CHx_ON are disconnected to corresponding pins, the pin is floating with GPIO pull up/down setting which will be Hi-Z if no pull.

(2) “off-state”: CHx_O / CHx_ON output with inactive state (e.g., CHx_O = 0⊕CHxP = CHxP).

(3) See Break mode section for more details.

(4) ⊕: Xor calculate.

(5) (! OxCPRE)：the complementary output of the OxCPRE signal.

Dead time insertion

The dead time insertion is enabled when MCHxMSEL=2’b11 and both CHxEN and MCHxEN are configured to 1’b1, it is also necessary to configure POEN to 1. The field named DTCFG defines the dead time delay that can be used for all channels. Refer to the ***Complementary channel protection register (TIMERx_CCHP)*** for details about the delay time.

The dead time delay insertion ensures that two complementary signals are not active at the same time.

When the channel x match event (TIMERx_CNT = CHxVAL) occurs, OxCPRE will be toggled in PWM mode 0. At point A in ***Figure 24-121. Complementary output with dead-time insertion***, CHx_O signal remains at the low level until the end of the dead time delay, while MCHx_O signal will be cleared at once. Similarly, at point B when the channelx match event (TIMERx_CNT = CHxVAL) occurs again, OxCPRE is cleared, and CHx_O signal will be cleared at once, while MCHx_O signal remains at the low level until the end of the dead time delay.

Sometimes, we can see corner cases about the dead time insertion. For example: the dead time delay is greater than or equal to the duty cycle of the CHx_O signal, then the CHx_O signal is always inactive (As shown in ***Figure 24-121. Complementary output with dead-time insertion***).

Figure 24-121. Complementary output with dead-time insertion

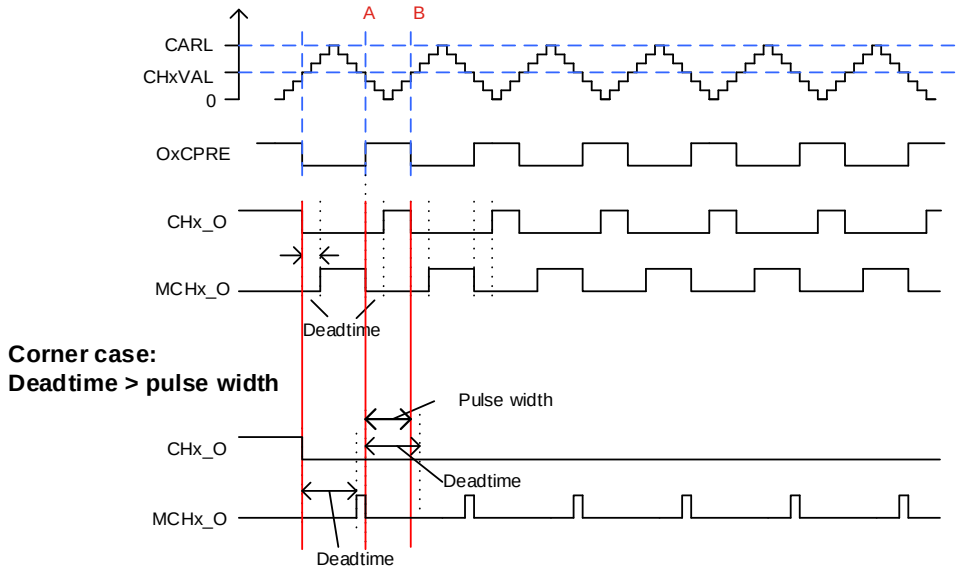

Break function

The MCHx_O output is the inverse of the CHx_O output when the MCHxMSEL=2'b11 (and the MCHxOMCTL bits are not used in the generation of the MCHx_O output). In this case, CHx_O and MCHx_O signals cannot be set to active level at the same time.

The general level3 timers have the BREAK0 function. The BREAK0 function can be enabled by setting the BRK0EN bit in the TIMERx_CCHP register. The break input polarity is configured by the BRK0P bit in TIMERx_CCHP register, the input is active on level.

In BREAK0 function, CHx_O and MCHx_O are controlled by the POEN, OAEN, IOS and ROS bits in the TIMERx_CCHP register, ISOx and ISOxN bits in the TIMERx_CTL1 register.

The break event is the result of logic ORed of all sources. The BREAK0 function can handle three types of event sources:

- External sources: coming from BRKIN0 input;
- System sources: HXTAL stuck event which is generated by Clock Monitor CKM in RCU, LVD lock event, Cortex®-M7 LOCKUP_LOCK event or SRAM parity error event;
- On-chip peripheral events: input by comparator output or HPDF watchdog output.

BREAK0 events can also be generated by software using BRK0G bit in the TIMERx_SWEVG register.

Refer to ***Figure 24-122. BREAK0 function logic diagram***, BRKIN0 can select GPIO pins from the TRIGSEL module, which can select by TRICSEL_TIMERxBTKIN registers.

Figure 24-122. BREAK0 function logic diagram

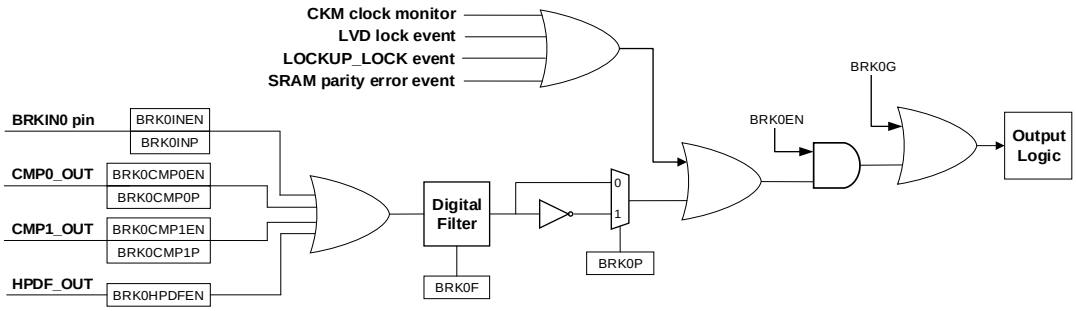

When a BREAK0 event occurs, the outputs are force at an inactive level, or at a predefined level (either active or inactive) after a deadtime duration.

When the MCHxMSEL = 2'b11 and a break occurs, the POEN bit is cleared asynchronously. As soon as POEN is 0, the level of the CHx_O and MCHx_O outputs are determined by the ISOx and ISOxN bits in the TIMERx_CTL1 register. If IOS = 0, the timer releases the enable output, otherwise, the enable output remains high. When IOS=1, the output behavior of the channel is shown in ***Figure 24-123. Output behavior of the channel in response to BREAK0 (the break input high active and IOS=1)***. The complementary outputs are first in the reset state, and then the dead time generator is reactivated to drive the outputs with the level programmed in the ISOx and ISOxN bits after a dead time.

Figure 24-123. Output behavior of the channel in response to BREAK0 (the break input high active and IOS=1)

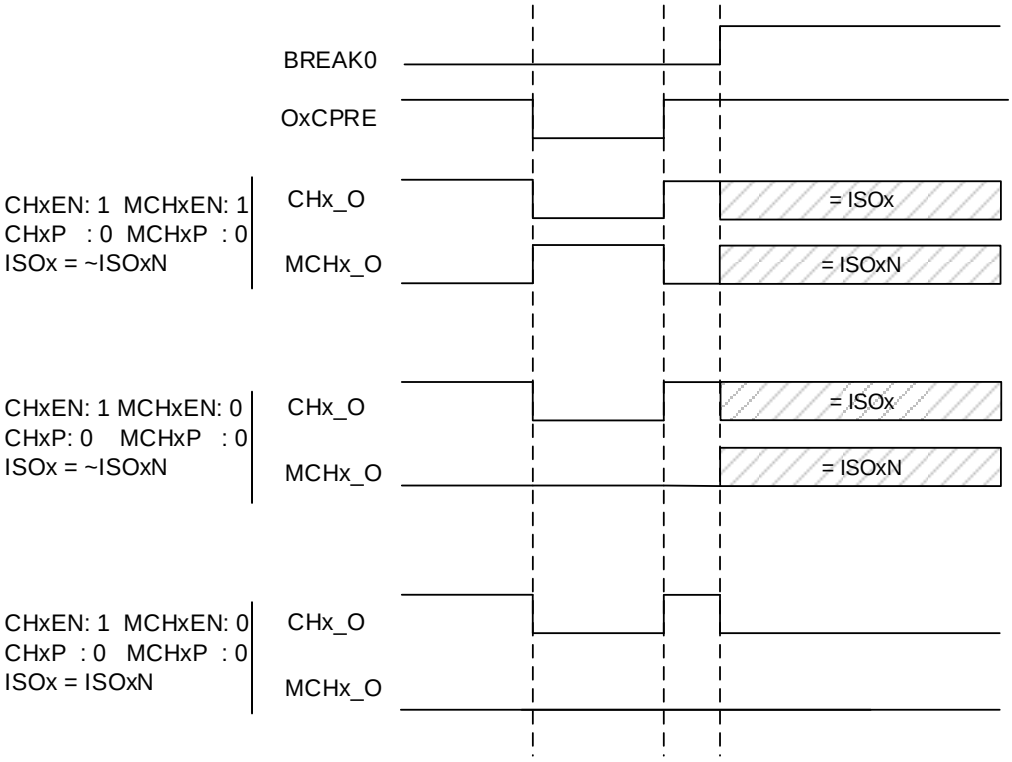

When a break occurs, the BRKIF bit in the TIMERx_INTF register will be set. If BRKIE is 1, an interrupt will be generated.

Locked break function

The BRKIN0 input pin of general timer have the locked break function, this function can be enabled by setting the BRK0LK bit in the TIMERx_CCHP register.

When the locked break function is enabled, the BRKIN0 pins need to be configured to open-drain output mode with low level active (BRK0P=0 and BRK0IN0P=0). When any break source requests occur, the BRKIN0 pin can be forced to low level. If the break input polarity is active high (BRK0P=1 and BRK0IN0P=1), the locked break function is invalid.

When the break function is enabled (the BRK0EN =1), the BRKIN0 pin can be forced to low level with the BRK0G bit setting to 1 by software.

When the break function is disabled (the BRK0EN =0), setting the BRK0G bit will have no effect on the BRKIN0 pin. The BRK0F bit will set and the channel outputs will be in a safe state.

The BRKIN0 pin can be released by setting the BRK0REL bit in the TIMERx_CCHP register. When the break input sources are inactive, the BRK0REL bit will cleared by hardware and the BRKIN0 pin will restore the locked break function.

In the following two cases, the BRKIN0 pin cannot be released:

- Break input sources are active: the BRK0REL bit is set to 1 and the BRKIN0 pin locked break function is released. The break events are still active, because the break input sources are still active.
- POEN=1: when the channel outputs are enabled, the BRKIN0 pin cannot be released even if the BRK0REL is set.

Table 24-19. Break function input pins locked/ released conditions

POEN	BRK0LK	BRK0REL	Break input pin state
0	1	0	Locked
	1	1	Released

The locked break function of the BREAK0 input pin BRKIN0 is enabled by default (BRK0REL=0). When the BREAK0 events occur, the following steps can be used to reconfigure the locked break function:

- Set the BRK0REL bit to 1 and released the BRKIN0 pin;
- The software waits for the system break sources inactive, and then clears the SYSBIF flag；
- The software polls the state of BRK0REL bit, until the BRK0REL bit is cleared (cleared by hardware).

Then the locked break function of BREAK0 input pin is re-enabled, and the channel outputs can be restored by setting the POEN bit to 1 by software.

Figure 24-124. BRKIN0 pin logic with BREAK0 function

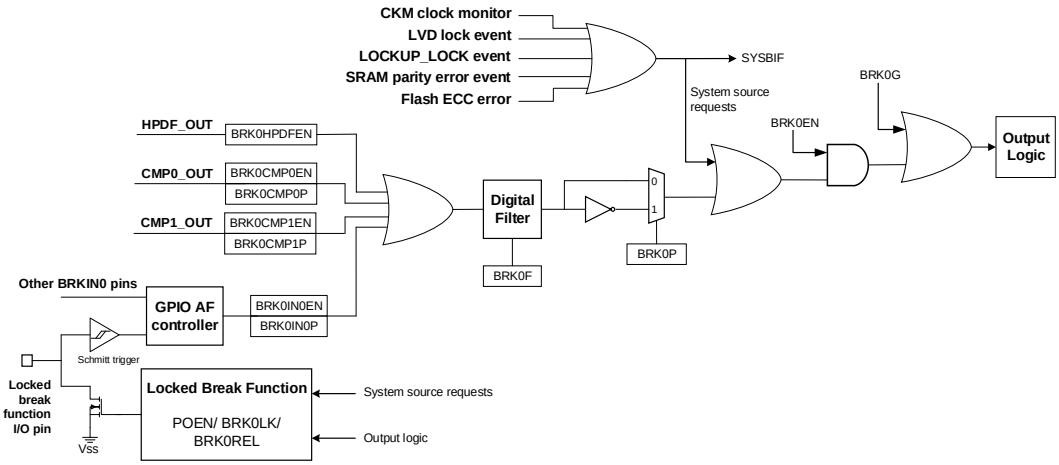

Single pulse mode

Single pulse mode is opposite to the repetitive mode, which can be enabled by setting SPM in TIMERx_CTL0. If SPM is set, the counter will be cleared and stopped automatically when the next update event occurs. In order to get a pulse waveform, the TIMERx is configured to PWM mode or compare mode by CHxCOMCTL or MCHxCOMCTL bits.

Once the timer is set to the single pulse mode, it is not necessary to configure the timer enable bit CEN in the TIMERx_CTL0 register to 1 to enable the counter. Setting the CEN bit to 1 or a trigger signal edge can generate a pulse and then keep the CEN bit at a high state until the update event occurs or the CEN bit is written to 0 by software. If the CEN bit is cleared to 0 by software, the counter will be stopped and its value will be held. If the CEN bit is automatically cleared to 0 by a hardware update event, the counter will be reinitialized.

In the single pulse mode, the active edge of trigger which sets the CEN bit to 1 will enable the counter. However, there exists several clock delays to perform the comparison result between the counter value and the TIMERx_CHxCV value. After a trigger rising occurs in the single pulse mode, the OxCPRE signal will immediately be forced to the state which the OxCPRE/ MOxCPRE signals will change to, as the compare match event occurs without taking the comparison result into account.

Figure 24-125. Single pulse mode TIMERx_CHxCV = 0x04 TIMERx_CAR=0x60

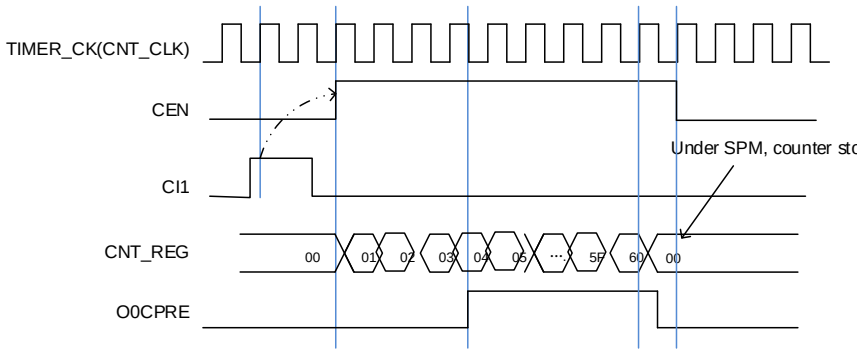

Timer DMA mode

Timer's DMA mode is the function that configures timer's register by DMA module. The relative registers are TIMERx_DMACFG and TIMERx_DMATB. Of course, you have to enable a DMA request which will be asserted by some internal event. When the interrupt event was asserted, TIMERx will send a request to DMA, which is configured to M2P mode and PADDR is TIMERx_DMATB, then DMA will access the TIMERx_DMATB. In fact, register TIMERx_DMATB is only a buffer; timer will map the TIMERx_DMATB to an internal register, appointed by the field of DMATA in TIMERx_DMACFG. If the field of DMATC in TIMERx_DMACFG is 0(1 transfer), then the timer's DMA request is finished. While if TIMERx_DMATC is not 0, such as 3(4 transfers), then timer will send 3 more requests to DMA, and DMA will access timer's registers DMATA+0x4, DMATA+0x8, DMATA+0xc at the next 3 accesses to TIMERx_DMATB. In a word, one-time DMA internal interrupt event assert, DMATC+1 times request will be send by TIMERx.

If one more time DMA request event coming, TIMERx will repeat the process as above.

UPIF bit backup

The UPIF bit backup function is enabled by setting UPIFBUEN in the TIMERx_CTL0 register. The UPIF and UPIFBU bits are fully synchronized and without latency.

By using this function, the UPIF bit in the TIMERx_INTF register will be backuped to the UPIFBU bit in the TIMERx_CNT register. This can avoid conflicts when reading the counter and interrupt processing.

Timer debug mode

When the Cortex®-M7 halted, and the TIMERx_HOLD configuration bit in DBG_CTL1 register set to 1, the TIMERx counter stops.

24.4.5. Register definition (TIMERx, x=15,16)

TIMER15 base address: 0x4001 4400

TIMER16 base address: 0x4001 4800

Control register 0 (TIMERx_CTL0)

Address offset: 0x00
Reset value: 0x0000 0000

This register has to be accessed by word (32-bit).

31	30	29	28	27	26	25	24	23	22	21	20	19	18	17	16
Reserved															

15	14	13	12	11	10	9	8	7	6	5	4	3	2	1	0
Reserved				UPIFBUEN	Reserved	CKDIV[1:0]		ARSE	Reserved			SPM	UPS	UPDIS	CEN
				rw		rw		rw				rw	rw	rw	rw

Bits	Fields	Descriptions
31:12	Reserved	Must be kept at reset value.
11	UPIFBUEN	UPIF bit backup enable 0: Backup disable. UPIF bit is not backuped to UPIFBU bit in TIMERx_CNT register. 1: Backup enabled. UPIF bit is backuped to UPIFBU bit in TIMERx_CNT register.
10	Reserved	Must be kept at reset value.
9:8	CKDIV[1:0]	Clock division The CKDIV bits can be configured by software to specify division ratio between CK_TIMER (the timer clock) and DTS (the dead time and sampling clock) which is used for the dead time generator and the digital filter. 00: $f_{DTS}= f_{CK_TIMER}$ 01: $f_{DTS}= f_{CK_TIMER}$ /2 10: $f_{DTS}= f_{CK_TIMER}$ /4 11: Reserved
7	ARSE	Auto-reload shadow enable 0: The shadow register for TIMERx_CAR register is disabled 1: The shadow register for TIMERx_CAR register is enabled
6:4	Reserved	Must be kept at reset value.
3	SPM	Single pulse mode 0: Single pulse mode is disabled. Counter continues after an update event. 1: Single pulse mode is enabled. The CEN bit is cleared by hardware and the

		counter stops at next update event.
2	UPS	Update source This bit is used to select the update event sources by software. 0: Any of the following events generates an update interrupt or a DMA request: – The UPG bit is set. – The counter generates an overflow event. – The slave mode controller generates an update event. 1: Only counter overflow generates an update interrupt or a DMA request.
1	UPDIS	Update disable This bit is used to enable or disable the update event generation. 0: Update event enable. The update event is generated and the buffered registers are loaded with their preloaded values when one of the following events occurs: – The UPG bit is set. – The counter generates an overflow event. – The slave mode controller generates an update event. 1: Update event disable. The buffered registers keep their value, while the counter and the prescaler are reinitialized if the UG bit is set or the slave mode controller generates a hardware reset event.
0	CEN	Counter enable 0: Counter disable 1: Counter enable The CEN bit must be set by software when timer works in external clock mode, pause mode or decoder mode. While in event mode, the hardware can set the CEN bit automatically.

Control register 1 (TIMERx_CTL1)

Address offset: 0x04

Reset value: 0x0000 0000

This register has to be accessed by word (32-bit).

31	30	29	28	27	26	25	24	23	22	21	20	19	18	17	16
CCUC[2:1]		Reserved													
rw															

15	14	13	12	11	10	9	8	7	6	5	4	3	2	1	0
Reserved						ISO0N	ISO0	Reserved				DMAS	CCUC[0]	Reserved	CCSE
						rw	rw					rw	rw		rw

Bits	Fields	Descriptions
31:30	CCUC[2:1]	Commutation control shadow register update control Refer to CCUC [0] description.

29:10	Reserved	Must be kept at reset value.
9	ISO0N	Idle state of multi mode channel 0 complementary output 0: When POEN bit is reset, MCH0_O is set low. 1: When POEN bit is reset, MCH0_O is set high. This bit can be modified only when PROT[1:0] bits in TIMERx_CCHP register is 00.
8	ISO0	Idle state of channel 0 output 0: When POEN bit is reset, CH0_O is set low. 1: When POEN bit is reset, CH0_O is set high. The CH0_O output changes after a dead time if MCH0_O is implemented. This bit can be modified only when PROT[1:0] bits in TIMERx_CCHP register is 00.
7:4	Reserved	Must be kept at reset value.
3	DMAS	DMA request source selection 0: DMA request of CHx/MCHx is sent when capture/compare event occurs. 1: DMA request of channel CHx/MCHx is sent when update event occurs.
2	CCUC[0]	Commutation control shadow register update control The CCUC[2:1] and CCUC[0] field are used to control the commutation control shadow register update. When the commutation control shadow registers (for CHxEN, MCHxEN and CHxCOMCTL bits) are enabled (CCSE=1), the update control of the shadow registers with the CCUC[2:0] bit-field are shown as below: 000: The shadow registers update when CMTG bit is set. 001: Reserved. 100: The shadow registers update when the counter generates an overflow event. Others: Reserved When a channel does not have a complementary output, this bit has no effect. **Note**: When CCUC[2:0] bit-field are set to 100, the update of the shadow registers also considers the value the CCUSEL bit in the TIMERx_CFG register.
1	Reserved	Must be kept at reset value.
0	CCSE	Commutation control shadow enable 0: The shadow registers (for CHxEN, MCHxEN and CHxCOMCTL bits) are disabled. 1: The shadow registers (for CHxEN, MCHxEN and CHxCOMCTL bits) are enabled. After these bits have been written, they are updated when commutation event comes. When a channel does not have a complementary output, this bit has no effect.

DMA and interrupt enable register (TIMERx_DMAINTEN)

Address offset: 0x0C

Reset value: 0x0000 0000

This register has to be accessed by word (32-bit).

31	30	29	28	27	26	25	24	23	22	21	20	19	18	17	16
Reserved							MCH0DEN	Reserved			MCH0IE	Reserved			
							rw				rw				

15	14	13	12	11	10	9	8	7	6	5	4	3	2	1	0
Reserved						CH0DEN	UPDEN	BRKIE	Reserved	CMTIE	Reserved			CH0IE	UPIE
						rw	rw	rw		rw				rw	rw

Bits	Fields	Descriptions
31:25	Reserved	Must be kept at reset value.
24	MCH0DEN	Multi mode channel 0 capture/compare DMA request enable 0: Disabled 1: Enabled **Note:** This bit just used for channel input and output independent mode (when MMCH0SEL[1:0] = 2b'00).
23:21	Reserved	Must be kept at reset value.
20	MCH0IE	Multi mode channel 0 capture/compare interrupt enable 0: Disabled 1: Enabled **Note:** This bit just used for channel input and output independent mode (when MMCH0SEL[1:0] = 2b'00).
19:10	Reserved	Must be kept at reset value.
9	CH0DEN	Channel 0 capture/compare DMA request enable 0: Disabled 1: Enabled
8	UPDEN	Update DMA request enable 0: Disabled 1: Enabled
7	BRKIE	Break interrupt enable 0: Disabled 1: Enabled
6	Reserved	Must be kept at reset value.
5	CMTIE	Commutation interrupt enable 0: Disabled 1: Enabled
4:2	Reserved	Must be kept at reset value.
1	CH0IE	Channel 0 capture/compare interrupt enable 0: Disabled

		1: Enabled
0	UPIE	Update interrupt enable 0: Disabled 1: Enabled

Interrupt flag register (TIMERx_INTF)

Address offset: 0x10

Reset value: 0x0000 0000

This register has to be accessed by word (32-bit).

31	30	29	28	27	26	25	24	23	22	21	20	19	18	17	16
Reserved							MCH0OF	Reserved			MCH0IF	Reserved			
							rc_w0				rc_w0				

15	14	13	12	11	10	9	8	7	6	5	4	3	2	1	0
Reserved						CH0OF	Reserved	BRK0IF	Reserved	CMTIF	Reserved			CH0IF	UPIF
						rc_w0		rc_w0		rc_w0				rc_w0	rc_w0

Bits	Fields	Descriptions
31:25	Reserved	Must be kept at reset value.
24	MCH0OF	Multi mode channel 0 over capture flag When multi mode channel 0 is configured in input mode, this flag is set by hardware when a capture event occurs while MCH0IF flag has already been set. This flag is cleared by software. 0: No over capture interrupt occurred 1: Over capture interrupt occurred
23:21	Reserved	Must be kept at reset value.
20	MCH0IF	Multi mode channel 0 capture/compare interrupt flag This flag is set by hardware and cleared by software. If multi mode channel 0 is in input mode, this flag is set when a capture event occurs. If multi mode channel 0 is in output mode, this flag is set when a compare event occurs. If multi mode channel 0 is set to input mode, this bit will be reset by reading TIMERx_MCH0CV. 0: No multi mode channel 0 capture/compare interrupt occurred 1: Multi mode channel 0 capture/compare interrupt occurred
19:10	Reserved	Must be kept at reset value.
9	CH0OF	Channel 0 over capture flag When channel 0 is configured in input mode, this flag is set by hardware when a capture event occurs while CH0IF flag has already been set. This flag is cleared by software.

		0: No over capture interrupt occurred 1: Over capture interrupt occurred
8	Reserved	Must be kept at reset value.
7	BRK0IF	BREAK0 interrupt flag This flag is set by hardware when the BREAK0 input is active, and cleared by software if the BREAK0 input is not at active level. 0: No active level on BREAK0 input has been detected. 1: An active level on BREAK0 input has been detected.
6	Reserved	Must be kept at reset value.
5	CMTIF	Channel commutation interrupt flag This flag is set by hardware when the commutation event of channel occurs, and cleared by software. 0: No channel commutation interrupt occurred 1: Channel commutation interrupt occurred
4:2	Reserved	Must be kept at reset value.
1	CH0IF	Channel 0 capture/compare interrupt flag This flag is set by hardware and cleared by software. If channel 0 is in input mode, this flag is set when a capture event occurs. If channel 0 is in output mode, this flag is set when a compare event occurs. If channel 0 is set to input mode, this bit will be reset by reading TIMERx_CH0CV. 0: No channel 0 interrupt occurred 1: Channel 0 interrupt occurred
0	UPIF	Update interrupt flag This bit is set by hardware when an update event occurs and cleared by software. 0: No update interrupt occurred 1: Update interrupt occurred

Software event generation register (TIMERx_SWEVG)

Address offset: 0x14

Reset value: 0x0000 0000

This register has to be accessed by word (32-bit).

31	30	29	28	27	26	25	24	23	22	21	20	19	18	17	16
Reserved											MCH0G	Reserved			
											w				

15	14	13	12	11	10	9	8	7	6	5	4	3	2	1	0
Reserved								BRK0G	Reserved	CMTG	Reserved			CH0G	UPG
								w		w				w	w

Bits	Fields	Descriptions
31:21	Reserved	Must be kept at reset value.
20	MCH0G	Multi mode channel 0 capture or compare event generation. This bit is set by software to generate a capture or compare event in multi mode channel 0, it is automatically cleared by hardware. When this bit is set, the MCH0IF flag will be set, and the corresponding interrupt or DMA request will be sent if enabled. In addition, if multi mode channel 0 is configured in input mode, the current value of the counter is captured to TIMERx_MCH0CV register, and the MCH0OF flag is set if the MCH0IF flag has been set. 0: No generate a multi mode channel 0 capture or compare event 1: Generate a multi mode channel 0 capture or compare event
19:8	Reserved	Must be kept at reset value.
7	BRK0G	BREAK0 event generation This bit is set by software to generate an event and cleared by hardware automatically. When this bit is set, the POEN bit will be cleared and BRK0IF flag will be set, related interrupt can occur if enabled. 0: No generate a break event 1: Generate a break event
6	Reserved	Must be kept at reset value.
5	CMTG	Channel commutation event generation This bit is set by software and cleared by hardware automatically. When this bit is set, channel's capture/compare control registers (CHxEN, MCHxEN and CHxCOMCTL bits) are updated based on the value of CCSE (in the TIMERx_CTL1). 0: No affect 1: Generate channel commutation update event
4:2	Reserved	Must be kept at reset value.
1	CH0G	Channel 0 capture or compare event generation This bit is set by software to generate a capture or compare event in channel 0, it is automatically cleared by hardware. When this bit is set, the CH0IF flag will be set, and the corresponding interrupt or DMA request will be sent if enabled. In addition, if channel 0 is configured in input mode, the current value of the counter is captured to TIMERx_CH0CV register, and the CH0OF flag is set if the CH0IF flag has been set. 0: No generate a channel 0 capture or compare event 1: Generate a channel 0 capture or compare event
0	UPG	Update event generation This bit can be set by software, and automatically cleared by hardware. When this bit is set, the counter is cleared if the up counting mode is selected. The prescaler counter is cleared at the same time.

0: No generate an update event

1: Generate an update event

Channel control register 0 (TIMERx_CHCTL0)

Address offset: 0x18

Reset value: 0x0000 0000

This register has to be accessed by word (32-bit).

31	30	29	28	27	26	25	24	23	22	21	20	19	18	17	16
Reserved	CH0MS[2]	Reserved													CH0COMCTL[3] / Reserved
	rw														rw

15	14	13	12	11	10	9	8	7	6	5	4	3	2	1	0
Reserved								Reserved	CH0COMCTL[2:0]			CH0COMSEN	Reserved	CH0MS[1:0]	
								CH0CAPFLT[3:0]				CH0CAPPSC[1:0]			
									rw			rw		rw	

Output compare mode:

Bits	Fields	Descriptions
31	Reserved	Must be kept at reset value.
30	CH0MS[2]	Channel 0 I/O mode selection Refer to CH0MS[1:0] description.
29:17	Reserved	Must be kept at reset value.
16	CH0COMCTL[3]	Channel 0 compare output control Refer to CH0COMCTL[2:0] description
15:7	Reserved	Must be kept at reset value.
6:4	CH0COMCTL[2:0]	Channel 0 compare output control The CH0COMCTL[3] and CH0COMCTL[2:0] bit-field control the behavior of O0CPRE which drives CH0_O. The active level of O0CPRE is high, while the active level of CH0_O depends on CH0P bit. **Note**: When multi mode channel 0 is configured in output mode, and the MCH0MSEL[1:0] = 2b'11, This bit-field controls the behavior of O0CPRE which drives CH0_O and MCH0_O. The active level of O0CPRE is high, while the active level of CH0_O and MCH0_O depends on CH0P and MCH0P bits. 0000: Timing mode. The O0CPRE signal keeps stable, independent of the comparison between the register TIMERx_CH0CV and the counter TIMERx_CNT. 0001: Set the channel output on match. O0CPRE signal is forced high when the counter matches the output compare register TIMERx_CH0CV. 0010: Clear the channel output on match. O0CPRE signal is forced low when the

		counter matches the output compare register TIMERx_CH0CV. 0011: Toggle on match. O0CPRE toggles when the counter matches the output compare register TIMERx_CH0CV. 0100: Force low. O0CPRE is forced low level. 0101: Force high. O0CPRE is forced high level. 0110: PWM mode 0. When counting up, O0CPRE is active as long as the counter is smaller than TIMERx_CH0CV, otherwise it is inactive. When counting down, O0CPRE is inactive as long as the counter is larger than TIMERx_CH0CV, otherwise it is active. 0111: PWM mode 1. When counting up, O0CPRE is inactive as long as the counter is smaller than TIMERx_CH0CV, otherwise it is active. When counting down, O0CPRE is active as long as the counter is larger than TIMERx_CH0CV, otherwise it is inactive. 1000~1111: Reserved. **Note**: If configured in PWM mode, the O0CPRE level changes only when the output compare mode switches from “Timing” mode to “PWM” mode or the result of the comparison changes. When the outputs of CH0 and MCH0 are complementary, this bit-field is preloaded. If CCSE =1, this bit-field will only be updated when a channel commutation event is generated. This bit cannot be modified when PROT[1:0] bit-field in TIMERx_CCHP register is 11 and CH0MS bit-field is 000 (compare mode).
3	CH0COMSEN	Channel 0 compare output shadow enable When this bit is set, the shadow register of TIMERx_CH0CV register which updates at each update event will be enabled. 0: Channel 0 output compare shadow disabled 1: Channel 0 output compare shadow enabled The PWM mode can be used without validating the shadow register only in single pulse mode (SPM bit in TIMERx_CTL0 register is set). This bit cannot be modified when PROT[1:0] bit-field in TIMERx_CCHP register is 11 and CH0MS bit-field is 000.
2	Reserved	Must be kept at reset value.
1:0	CH0MS[1:0]	Channel 0 I/O mode selection This bit-field specifies the work mode of the channel and the input signal selection. The CH0MS[2:0] bit-field is writable only when the channel is not active (When MCH0MSEL[1:0] = 2b’00, the CH1EN bit in TIMERx_CHCTL2 register is reset; when MCH0MSEL[1:0] = 2b’11, the CH0EN and MCH0EN bits in TIMERx_CHCTL2 register are reset). 000: Channel 0 is configured as output. 001: Channel 0 is configured as input, IS0 is connected to CI0FE0. 010: Reserved

011: Reserved
100: Channel 0 is configured as input, IS0 is connected to MCI0FE0.
101~111: Reserved.

Input capture mode:

Bits	Fields	Descriptions
31	Reserved	Must be kept at reset value.
30	CH0MS[2]	Channel 0 I/O mode selection Refer to CH0MS[1:0] description.
29:8	Reserved	Must be kept at reset value.
7:4	CH0CAPFLT[3:0]	Channel 0 input capture filter control An event counter is used in the digital filter, in which a transition on the output occurs after N input events. This bit-field specifies the frequency used to sample CI0 input signal and the length of the digital filter applied to CI0. 0000: Filter disabled, $f_{SAMP}=f_{DTS}$, N=1. 0001: $f_{SAMP}=f_{CK_TIMER}$, N=2. 0010: $f_{SAMP}= f_{CK_TIMER}$, N=4. 0011: $f_{SAMP}= f_{CK_TIMER}$, N=8. 0100: $f_{SAMP}=f_{DTS}/2$, N=6. 0101: $f_{SAMP}=f_{DTS}/2$, N=8. 0110: $f_{SAMP}=f_{DTS}/4$, N=6. 0111: $f_{SAMP}=f_{DTS}/4$, N=8. 1000: $f_{SAMP}=f_{DTS}/8$, N=6. 1001: $f_{SAMP}=f_{DTS}/8$, N=8. 1010: $f_{SAMP}=f_{DTS}/16$, N=5. 1011: $f_{SAMP}=f_{DTS}/16$, N=6. 1100: $f_{SAMP}=f_{DTS}/16$, N=8. 1101: $f_{SAMP}=f_{DTS}/32$, N=5. 1110: $f_{SAMP}=f_{DTS}/32$, N=6. 1111: $f_{SAMP}=f_{DTS}/32$, N=8.
3:2	CH0CAPPSC[1:0]	Channel 0 input capture prescaler This bit-field specifies the factor of the prescaler on channel 0 input. The prescaler is reset when CH0EN bit in TIMERx_CHCTL2 register is cleared. 00: Prescaler disabled, capture is done on each channel input edge. 01: Capture is done every 2 channel input edges. 10: Capture is done every 4 channel input edges. 11: Capture is done every 8 channel input edges.
1:0	CH0MS[1:0]	Channel 0 I/O mode selection Same as output compare mode.

Channel control register 2 (TIMERx_CHCTL2)

Address offset: 0x20

Reset value: 0x0000 0000

This register can be accessed by half-word(16-bit) or word(32-bit).

31	30	29	28	27	26	25	24	23	22	21	20	19	18	17	16
Reserved															

15	14	13	12	11	10	9	8	7	6	5	4	3	2	1	0
Reserved												MCH0P	MCH0EN	CH0P	CH0EN
												rw	rw	rw	rw

Bits	Fields	Descriptions
31:4	Reserved	Must be kept at reset value.
3	MCH0P	Multi mode channel 0 output polarity When Multi mode channel 0 is configured in output mode, and the MCH0MSEL[1:0] = 2b'11, this bit specifies the MCH0_O output signal polarity. 0: Multi mode channel 0 output active high 1: Multi mode channel 0 output active low When CH0 is configured in input mode, in conjunction with CH0P, this bit is used to define the polarity of CH0. This bit cannot be modified when PROT[1:0] bit-field in TIMERx_CCHP register is 11 or 10.
2	MCH0EN	Multi mode channel 0 capture/compare enable When multi mode channel 0 is configured in output mode, setting this bit enables MCH0_O signal in active state. When multi mode channel 0 is configured in input mode, setting this bit enables the capture event in multi mode channel 0. 0: Multi mode channel 0 disabled 1: Multi mode channel 0 enabled
1	CH0P	Channel 0 capture/compare polarity When channel 0 is configured in output mode, this bit specifies the output signal polarity. 0: Channel 0 active high 1: Channel 0 active low When channel 0 is configured in input mode, these bits specifie the channel 0 input signal's polarity. [MCH0P, CH0P] will select the active trigger or capture polarity for channel 0 input signals. 00: channel 0 input signal's rising edge is the active signal for capture or trigger operation in slave mode. And channel 0 input signal will not be inverted. 01: channel 0 input signal's falling edge is the active signal for capture or trigger operation in slave mode. And channel 0 input signal will be inverted. 10: Reserved.

		11: Noninverted/both channel 0 input signal's edges. This bit cannot be modified when PROT[1:0] bit-field in TIMERx_CCHP register is 11 or 10.
0	CH0EN	Channel 0 capture/compare enable When channel 0 is configured in output mode, setting this bit enables CH0_O signal in active state. When channel 0 is configured in input mode, setting this bit enables the capture event in channel 0. 0: Channel 0 disabled 1: Channel 0 enabled

Counter register (TIMERx_CNT)

Address offset: 0x24
Reset value: 0x0000 0000

This register has to be accessed by word (32-bit).

31	30	29	28	27	26	25	24	23	22	21	20	19	18	17	16
UPIFBU	Reserved														
r															

15	14	13	12	11	10	9	8	7	6	5	4	3	2	1	0
CNT[15:0]															
rw															

Bits	Fields	Descriptions
31	UPIFBU	UPIF bit backup This bit is a backup of UPIF bit in TIMERx_INTF register, and read-only. This bit is only valid when UPIFBUEN = 1. If the UPIFBUEN =0, this bit is reserved and read the result is 0.
30:16	Reserved	Must be kept at reset value.
15:0	CNT[15:0]	This bit-field indicates the current counter value. Writing to this bit-field can change the value of the counter.

Prescaler register (TIMERx_PSC)

Address offset: 0x28
Reset value: 0x0000 0000

This register has to be accessed by word (32-bit).

31	30	29	28	27	26	25	24	23	22	21	20	19	18	17	16
Reserved															

15	14	13	12	11	10	9	8	7	6	5	4	3	2	1	0
PSC[15:0]															

rw

Bits	Fields	Descriptions
31:16	Reserved	Must be kept at reset value.
15:0	PSC[15:0]	Prescaler value of the counter clock The PSC clock is divided by (PSC+1) to generate the counter clock. The value of this bit-field will be loaded to the corresponding shadow register at every update event.

Counter auto reload register (TIMERx_CAR)

Address offset: 0x2C

Reset value: 0x0000 FFFF

This register has to be accessed by word (32-bit).

31	30	29	28	27	26	25	24	23	22	21	20	19	18	17	16
Reserved															

15	14	13	12	11	10	9	8	7	6	5	4	3	2	1	0
CARL[15:0]															

rw

Bits	Fields	Descriptions
31:16	Reserved	Must be kept at reset value.
15:0	CARL[15:0]	Counter auto reload value This bit-field specifies the auto reload value of the counter.

Counter repetition register 0 (TIMERx_CREP0)

Address offset: 0x30

Reset value: 0x0000 0000

This register has to be accessed by word (32-bit).

31	30	29	28	27	26	25	24	23	22	21	20	19	18	17	16
Reserved															

15	14	13	12	11	10	9	8	7	6	5	4	3	2	1	0
Reserved								CREP0[7:0]							

rw

Bits	Fields	Descriptions
31:8	Reserved	Must be kept at reset value.

7:0	CREP0[7:0]	Counter repetition value 0 This bit-field specifies the update event generation rate. Each time the repetition counter counts down to zero, an update event will be generated. The update rate of the shadow registers is also affected by this bit-field when these shadow registers are enabled. **Note**: This bit-field just used with CREPSEL =0 (in TIMERx_CFG register).

Channel 0 capture/compare value register (TIMERx_CH0CV)

Address offset: 0x34

Reset value: 0x0000 0000

This register has to be accessed by word (32-bit).

31	30	29	28	27	26	25	24	23	22	21	20	19	18	17	16
Reserved															

15	14	13	12	11	10	9	8	7	6	5	4	3	2	1	0
CH0VAL[15:0]															
rw															

Bits	Fields	Descriptions
31:16	Reserved	Must be kept at reset value.
15:0	CH0VAL[15:0]	Capture/compare value of channel 0 When channel 0 is configured in input mode, this bit-field indicates the counter value at the last capture event. And this bit-field is read-only. When channel 0 is configured in output mode, this bit-field contains value to be compared to the counter. When the corresponding shadow register is enabled, the shadow register updates by every update event.

Complementary channel protection register (TIMERx_CCHP)

Address offset: 0x44

Reset value: 0x0000 0000

This register has to be accessed by word (32-bit).

31	30	29	28	27	26	25	24	23	22	21	20	19	18	17	16
Reserved			BRK0LK	Reserved	BRK0REL	Reserved						BRK0F[3:0]			
	rw		rw		rw								rw		

15	14	13	12	11	10	9	8	7	6	5	4	3	2	1	0
POEN	OAEN	BRK0P	BRK0EN	ROS	IOS	PROT[1:0]		DTCFG[7:0]							
rw	rw	rw	rw	rw	rw	rw		rw							

Bits	Fields	Descriptions

31:29	Reserved	Must be kept at reset value.
28	BRK0LK	BREAK0 input locked 0: BREAK0 input in input mode 1: BREAK0 input in locked mode When the BRK0LK is set to 1, the BREAK0 input is configured in open drain output mode. Any active break event asserts a low logic level on the BREAK0 input to indicate an internal break event to external devices. This bit can be modified only when PROT[1:0] bit-field in TIMERx_CCHP register is 00. **Note**: Every write operation to this bit needs a delay of 1 APB clock to active.
27	Reserved	Must be kept at reset value.
26	BRK0REL	BREAK0 input released This bit is cleared by hardware when the break input is invalid. 0: BREAK0 input is unreleased 1: BREAK0 input is released The locked output control (open drain mode in Hi-z state) is released by setting this bit with software. And when the fault is disappeared, this bit will reset by hardware. **Note**: Every write operation to this bit needs a delay of 1 APB clock to active.
25:20	Reserved	Must be kept at reset value.
19:16	BRK0F[3:0]	BREAK0 input signal filter An event counter is used in the digital filter, in which a transition on the output occurs after N input events. This bit-field specifies the frequency used to sample BREAK0 input signal and the length of the digital filter applied to BREAK0. 0000: Filter disabled. BREAK0 act asynchronously, N=1 0001: $f_{SAMP} = f_{CK_TIMER}$, N=2 0010: $f_{SAMP} = f_{CK_TIMER}$, N=4 0011: $f_{SAMP} = f_{CK_TIMER}$, N=8 0100: $f_{SAMP} = f_{DTS}/2$, N=6 0101: $f_{SAMP} = f_{DTS}/2$, N=8 0110: $f_{SAMP} = f_{DTS}/4$, N=6 0111: $f_{SAMP} = f_{DTS}/4$, N=8 1000: $f_{SAMP} = f_{DTS}/8$, N=6 1001: $f_{SAMP} = f_{DTS}/8$, N=8 1010: $f_{SAMP} = f_{DTS}/16$, N=5 1011: $f_{SAMP} = f_{DTS}/16$, N=6 1100: $f_{SAMP} = f_{DTS}/16$, N=8 1101: $f_{SAMP} = f_{DTS}/32$, N=5 1110: $f_{SAMP} = f_{DTS}/32$, N=6 1111: $f_{SAMP} = f_{DTS}/32$, N=8 This bit can be modified only when PROT[1:0] bit-field in TIMERx_CCHP register is

		00.
15	POEN	Primary output enable This bit is set by software or automatically set by hardware depending on the OAEN bit. It is cleared asynchronously by hardware as soon as the break input is active. When one of channels is configured in output mode, setting this bit enables the channel outputs (CHx_O and MCHx_O) if the corresponding enable bits (CHxEN, MCHxEN in TIMERx_CHCTL2 register) have been set. 0: Channel outputs are disabled or forced to idle state. 1: Channel outputs are enabled.
14	OAEN	Output automatic enable This bit specifies whether the POEN bit can be set automatically by hardware. 0: POEN cannot be set by hardware. 1: POEN can be set by hardware automatically at the next update event, if the break input is not active. This bit can be modified only when PROT[1:0] bit-field in TIMERx_CCHP register is 00.
13	BRK0P	BREAK0 input signal polarity This bit specifies the polarity of the BREAK0 input signal. 0: BREAK0 input active low 1: BREAK0 input active high This bit can be modified only when PROT[1:0] bit-field in TIMERx_CCHP register is 00.
12	BRK0EN	BREAK0 input signal enable This bit can be set to enable the BREAK0 input signal 0: BREAK0 input disabled 1: BREAK0 input enabled This bit can be modified only when PROT[1:0] bit-field in TIMERx_CCHP register is 00.
11	ROS	Run mode “off-state” enable When POEN bit is set (Run mode), this bit can be set to enable the “off-state” for the channels which has been configured in output mode. Please refer to ***Table 24-15. Complementary outputs controlled by parameters (MCHxMSEL =2’b11)***. 0: “off-state” disabled. If the CHxEN or CHxNEN bit is reset, the corresponding channel is output disabled. 1: “off-state” enabled. If the CHxEN or CHxNEN bit is reset, the corresponding channel is “off-state”. This bit cannot be modified when PROT [1:0] bit-filed in TIMERx_CCHP register is 10 or 11.
10	IOS	Idle mode “off-state” enable When POEN bit is reset (Idle mode), this bit can be set to enable the “off-state” for

		the channels which has been configured in output mode. Please refer to ***Table 24-15. Complementary outputs controlled by parameters (MCHxMSEL =2'b11)***. 0: "off-state" disabled. If the CHxEN/CHxNEN bits are both reset, the channels are output disabled. 1: "off-state" enabled. No matter the CHxEN/CHxNEN bits, the channels are "off-state". This bit cannot be modified when PROT [1:0] bit-filed in TIMERx_CCHP register is 10 or 11.
9:8	PROT[1:0]	Complementary register protect control This bit-field specifies the write protection property of registers. 00: Protect disabled. No write protection. 01: PROT mode 0. The ISOx/ISOxN bits in TIMERx_CTL1 register, the BRK0EN/ BRK0P/OAEN/DTCFG bits in TIMERx_CCHP register are writing protected. 10: PROT mode 1. In addition to the registers in PROT mode 0, the CHxP/MCHxP bits in TIMERx_CHCTL2 register (if related channel is configured in output mode), the ROS/IOS bits in TIMERx_CCHP register are writing protected. 11: PROT mode 2. In addition to the registers in PROT mode 1, the CHxCOMCTL/ CHxCOMSEN/ CHxCOMADDSEN/ MCHxCOMCTL/ MCHxCOMSEN bits in TIMERx_CHCTL0 and TIMERx_MCHCTL0 registers (if the related channel is configured in output) are writing protected. This bit-field can be written only once after the system reset. Once the TIMERx_CCHP register has been written, this bit-field will be writing protected.
7:0	DTCFG[7:0]	Dead time configuration This bit-field controls the value of the dead-time, which is inserted before the output transitions. The relationship between the value of DTCFG and the duration of dead-time is as follow: DTCFG[7:5] = 3'b0xx: DT value = DTCFG[7:0] * t_{DT}, t_{DT} = t_{DTS}. DTCFG[7:5] = 3'b10x: DT value = (64+DTCFG[5:0]) * t_{DT}, t_{DT} = t_{DTS}*2. DTCFG[7:5] = 3'b110: DT value = (32+DTCFG[4:0]) * t_{DT}, t_{DT} = t_{DTS}*8. DTCFG[7:5] = 3'b111: DT value = (32+DTCFG[4:0]) * t_{DT}, t_{DT} = t_{DTS}*16. This bit can be modified only when PROT[1:0] bit-field in TIMERx_CCHP register is 00.

Multi mode channel control register 0 (TIMERx_MCHCTL0)

Address offset: 0x48

Reset value: 0x0000 0000

This register has to be accessed by word (32-bit).

31	30	29	28	27	26	25	24	23	22	21	20	19	18	17	16
Reserved	MCH0MS[2]	Reserved													MCH0COMCTL[3]

															Reserved
	rw														rw
15	14	13	12	11	10	9	8	7	6	5	4	3	2	1	0
Reserved								Reserved	MCH0COMCTL[2:0]			MCH0COMSEN	Reserved	MCH0MS[1:0]	
								MCH0CAPFLT[3:0]				MCH0CAPPSC[1:0]			
									rw			rw		rw	

Output compare mode:

Bits	Fields	Descriptions
31	Reserved	Must be kept at reset value.
30	MCH0MS[2]	Multi mode channel 0 I/O mode selection Refer to MCH0MS[1:0] description.
29:17	Reserved	Must be kept at reset value.
16	MCH0COMCTL[3]	Multi mode channel 0 compare output control. Refer to MCH0COMCTL[2:0] description.
15:7	Reserved	Must be kept at reset value.
6:4	MCH0COMCTL[2:0]	Multi mode channel 0 output compare control When multi mode channel 0 is configured in output mode, and the MCH0MSEL[1:0] = 2b'00, the MCH0COMCTL[3] and MCH0COMCTL[2:0] bit-field control the behavior of MO0CPRE which drives MCH0_O. The active level of MO0CPRE is high, while the active level of MCH0_O depends on MCH0FP[1:0] bits. **Note**: When multi mode channel 0 is configured in output mode, and the MCH0MSEL[1:0] = 2b'11, the CH0COMCTL[2:0] bit-field controls the behavior of O0CPRE which drives CH0_O and MCH0_O, while the active level of CH0_O and MCH0_O depends on CH0P and MCH0P bits. 0000: Timing mode. The MO0CPRE signal keeps stable, independent of the comparison between the register TIMERx_MCH0CV and the counter TIMERx_CNT. 0001: Set the channel output on match. MO0CPRE signal is forced high when the counter matches the output compare register TIMERx_MCH0CV. 0010: Clear the channel output on match. MO0CPRE signal is forced low when the counter matches the output compare register TIMERx_MCH0CV. 0011: Toggle on match. MO0CPRE toggles when the counter matches the output compare register TIMERx_MCH0CV. 0100: Force low. MO0CPRE is forced low level. 0101: Force high. MO0CPRE is forced high level. 0110: PWM mode 0. When counting up, MO0CPRE is active as long as the counter is smaller than TIMERx_MCH0CV, otherwise it is inactive. When counting down, MO0CPRE is inactive as long as the counter is larger than TIMERx_MCH0CV, otherwise it is active.

		0111: PWM mode 1. When counting up, MO0CPRE is inactive as long as the counter is smaller than TIMERx_MCH0CV, otherwise it is active. When counting down, MO0CPRE is active as long as the counter is larger than TIMERx_MCH0CV, otherwise it is inactive. 1000~1111: Reserved. If configured in PWM mode, the MO0CPRE level changes only when the output compare mode switches from “Timing” mode to “PWM” mode or the result of the comparison changes. When the outputs of CH0 and MCH0 are complementary, this bit-field is preloaded. If CCSE =1, this bit-field will only be updated when a channel commutation event is generated. This bit cannot be modified when PROT[1:0] bit-field in TIMERx_CCHP register is 11 and CH0NMS bit-field is 00(compare mode).
3	MCH0COMSEN	Multi mode channel 0 output compare shadow enable When this bit is set, the shadow register of TIMERx_MCH0CV register which updates at each update event will be enabled. 0: Multi mode channel 0 output compare shadow disabled 1: Multi mode channel 0 output compare shadow enabled The PWM mode can be used without validating the shadow register only in single pulse mode (SPM bit in TIMERx_CTL0 register is set). This bit cannot be modified when PROT[1:0] bit-field in TIMERx_CCHP register is 11 and MCH0MS bit-field is 00.
2	Reserved	Must be kept at reset value.
1:0	MCH0MS[1:0]	Multi mode channel 0 I/O mode selection This bit-field specifies the work mode of the channel and the input signal selection. This bit-field is writable only when the channel is not active (MCH0EN bit in TIMERx_CHCTL2 register is reset). 000: Multi mode channel 0 is configured as output. 001: Multi mode channel 0 is configured as input, MIS0 is connected to MCI0FEM0. 010: Reserved. 011: Reserved. 100: Multi mode channel 0 is configured as input, MIS0 is connected to CI0FEM0. 101~111: Reserved.

Input capture mode:

Bits	Fields	Descriptions
31	Reserved	Must be kept at reset value.
30	MCH0MS[2]	Multi mode channel 0 I/O mode selection Refer to MCH0MS[1:0] description.
29:8	Reserved	Must be kept at reset value.
7:4	MCH0CAPFLT[3:0]	Multi mode channel 0 input capture filter control.

		An event counter is used in the digital filter, in which a transition on the output occurs after N input events. This bit-field specifies the frequency used to sample MCI0 input signal and the length of the digital filter applied to MCI0. 0000: Filter disabled, f_{SAMP}=f_{DTS}, N=1. 0001: f_{SAMP}=f_{CK_TIMER}, N=2. 0010: f_{SAMP}= f_{CK_TIMER}, N=4. 0011: f_{SAMP}= f_{CK_TIMER}, N=8. 0100: f_{SAMP}=f_{DTS}/2, N=6. 0101: f_{SAMP}=f_{DTS}/2, N=8. 0110: f_{SAMP}=f_{DTS}/4, N=6. 0111: f_{SAMP}=f_{DTS}/4, N=8. 1000: f_{SAMP}=f_{DTS}/8, N=6. 1001: f_{SAMP}=f_{DTS}/8, N=8. 1010: f_{SAMP}=f_{DTS}/16, N=5. 1011: f_{SAMP}=f_{DTS}/16, N=6. 1100: f_{SAMP}=f_{DTS}/16, N=8. 1101: f_{SAMP}=f_{DTS}/32, N=5. 1110: f_{SAMP}=f_{DTS}/32, N=6. 1111: f_{SAMP}=f_{DTS}/32, N=8.
3:2	MCH0CAPPSC[1:0]	Multi mode channel 0 input capture prescaler This bit-field specifies the factor of the prescaler on channel 0 input. The prescaler is reset when MCH0EN bit in TIMERx_CHCTL2 register is cleared. 00: Prescaler disabled, capture is done on each channel input edge. 01: Capture is done every 2 channel input edges. 10: Capture is done every 4 channel input edges. 11: Capture is done every 8 channel input edges.
1:0	MCH0MS[1:0]	Multi mode channel 0 I/O mode selection Same as output compare mode

Multi mode channel control register 2 (TIMERx_MCHCTL2)

Address offset: 0x50

Reset value: 0x0000 0000

This register can be accessed by half-word(16-bit) or word(32-bit).

31	30	29	28	27	26	25	24	23	22	21	20	19	18	17	16
Reserved															

15	14	13	12	11	10	9	8	7	6	5	4	3	2	1	0
Reserved														MCH0FP[1:0]	
														rw	

Bits	Fields	Descriptions

31:2	Reserved	Must be kept at reset value.
1:0	MCH0FP[1:0]	Multi mode channel 0 capture/compare free polarity When multi mode channel 0 is configured in output mode, and the MCH0MSEL[1:0] = 2b'00, these bits specifie the multi mode channel 0 output signal polarity. 00: Multi mode channel 0 active high 01: Multi mode channel 0 active low 10: Reserved. 11: Reserved. When multi mode channel 0 is configured in input mode, these bits specifie the multi mode channel 0 input signal's polarity. MCH0FP[1:0] will select the active trigger or capture polarity for multi mode channel 0 input signals. 00: Multi mode channel 0 input signal's rising edge is the active signal for capture or trigger operation in slave mode. And multi mode channel 0 input signal will not be inverted. 01: Multi mode channel 0 input signal's falling edge is the active signal for capture or trigger operation in slave mode. And multi mode channel 0 input signal will be inverted. 10: Reserved. 11: Noninverted/both multi mode channel 0 input signal's edges. This bit cannot be modified when PROT[1:0] bit-field in TIMERx_CCHP register is 11 or 10.

Multi mode channel 0 capture/compare value register (TIMERx_MCH0CV)

Address offset: 0x54

Reset value: 0x0000 0000

This register has to be accessed by word (32-bit).

31	30	29	28	27	26	25	24	23	22	21	20	19	18	17	16
Reserved															

15	14	13	12	11	10	9	8	7	6	5	4	3	2	1	0
MCH0VAL[15:0]															
rw															

Bits	Fields	Descriptions
31:16	Reserved	Must be kept at reset value.
15:0	MCH0VAL[15:0]	Capture/compare value of multi mode channel 0. When multi mode channel 0 is configured in input mode, this bit-field indicates the counter value at the last capture event. And this bit-field is read-only. When multi mode channel 0 is configured in output mode, this bit-field contains value to be compared to the counter. When the corresponding shadow register is

enabled, the shadow register updates by every update event.

Control register 2 (TIMERx_CTL2)

Address offset: 0x74

Reset value: 0x0030 0000

This register has to be accessed by word (32-bit).

31	30	29	28	27	26	25	24	23	22	21	20	19	18	17	16
Reserved										MCH0MSEL[1:0]		Reserved			
										rw					

15	14	13	12	11	10	9	8	7	6	5	4	3	2	1	0
Reserved															

Bits	Fields	Descriptions
31:22	Reserved	Must be kept at reset value.
21:20	MCH0MSEL[1:0]	Multi mode channel 0 mode select 00: Independent mode, MCH0 is independent of CH0 01: Reserved 10: Reserved 11: Complementary mode, only the CH0 is valid for input, and the outputs of MCH0 and CH0 are complementary
19:0	Reserved	Must be kept at reset value.

TIMER alternate function control register 0 (TIMERx_AFCTL0)

Address offset: 0x8C

Reset value: 0x0000 0001

This register has to be accessed by word (32-bit).

31	30	29	28	27	26	25	24	23	22	21	20	19	18	17	16
Reserved					BRK0CMP1P	BRK0CMP0P	Reserved								BRK0IN0P
					rw	rw									rw

15	14	13	12	11	10	9	8	7	6	5	4	3	2	1	0
Reserved					BRK0CMP1EN	BRK0CMP0EN	BRK0HPDFEN	Reserved							BRK0IN0EN
					rw	rw	rw								rw

Bits	Fields	Descriptions
31:27	Reserved	Must be kept at reset value.

26	BRK0CMP1P	BREAK0 CMP1 input polarity This bit is used to configure the CMP1 input polarity, and the specific polarity is determined by this bit and the BRK0P bit. 0: CMP1 input signal will not be inverted (BRK0P =0, the input signal is active low; BRK0P =1, the input signal is active high) 1: CMP1 input signal will be inverted (BRK0P=0, the input signal is active high; BRK0P =1, the input signal is active low) This bit can be modified only when PROT[1:0] bit-field in TIMERx_CCHP register is 00.
25	BRK0CMP0P	BREAK0 CMP0 input polarity This bit is used to configure the CMP0 input polarity, and the specific polarity is determined by this bit and the BRK0P bit. 0: CMP0 input signal will not be inverted (BRK0P =0, the input signal is active low; BRK0P =1, the input signal is active high) 1: CMP0 input signal will be inverted (BRK0P=0, the input signal is active high; BRK0P =1, the input signal is active low) This bit can be modified only when PROT[1:0] bit-field in TIMERx_CCHP register is 00.
24:17	Reserved	Must be kept at reset value.
16	BRK0IN0P	BREAK0 BRKIN0 alternate function input polarity This bit is used to configure the BRKIN0 input polarity, and the specific polarity is determined by this bit and the BRK0P bit. 0: BRKIN0 input signal will not be inverted (BRK0P =0, the input signal is active low; BRK0P =1, the input signal is active high) 1: BRKIN0 input signal will be inverted (BRK0P=0, the input signal is active high; BRK0P =1, the input signal is active low) This bit can be modified only when PROT[1:0] bit-field in TIMERx_CCHP register is 00.
15:11	Reserved	Must be kept at reset value.
10	BRK0CMP1EN	BREAK0 CMP1 enable 0: CMP1 input disabled 1: CMP1 input enabled This bit can be modified only when PROT[1:0] bit-field in TIMERx_CCHP register is 00.
9	BRK0CMP0EN	BREAK0 CMP0 enable 0: CMP0 input disabled 1: CMP0 input enabled This bit can be modified only when PROT[1:0] bit-field in TIMERx_CCHP register is 00.
8	BRK0HPDFEN	BREAK0 HPDF input(hpdf_break[x], please refer to ***Table 45-2. HPDF internal***

		signal) enable 0: HPDF input disabled 1: HPDF input enabled This bit can be modified only when PROT[1:0] bit-field in TIMERx_CCHP register is 00.
7:1	Reserved	Must be kept at reset value.
0	BRK0IN0EN	BREAK0 BRKIN0 alternate function input enable 0: BRKIN0 alternate function input disabled 1: BRKIN0 alternate function input enabled This bit can be modified only when PROT[1:0] bit-field in TIMERx_CCHP register is 00.

Counter repetition register 1 (TIMERx_CREP1)

Address offset: 0x98

Reset value: 0x0000 0000

This register has to be accessed by word (32-bit).

31	30	29	28	27	26	25	24	23	22	21	20	19	18	17	16
CREP1[31:16]															
rw															

15	14	13	12	11	10	9	8	7	6	5	4	3	2	1	0
CREP1[15:0]															
rw															

Bits	Fields	Descriptions
31:0	CREP1[31:0]	Counter repetition value 1 This bit-field is 32 bits and can be read on the fly. This bit-field specifies the update event generation rate. Each time the repetition counter counts down to zero, an update event will be generated. The update rate of the shadow registers is also affected by this bit-field when these shadow registers are enabled. **Note**: This bit-field just used with CREPSEL =1(in TIMERx_CFG register).

DMA configuration register (TIMERx_DMACFG)

Address offset: 0xE0

Reset value: 0x0000 0000

This register has to be accessed by word (32-bit).

31	30	29	28	27	26	25	24	23	22	21	20	19	18	17	16
Reserved															

15	14	13	12	11	10	9	8	7	6	5	4	3	2	1	0
Reserved		DMATC[5:0]						Reserved		DMATA[5:0]					
		rw								rw					

Bits	Fields	Descriptions
31:14	Reserved	Must be kept at reset value.
13:8	DMATC[5:0]	DMA transfer count This field defines the times of accessing(R/W) the TIMERx_DMATB register by DMA. 6'b000000: transfer 1 time 6'b000001: transfer 2 times … 6'b100101: transfer 38 times
7:6	Reserved	Must be kept at reset value.
5:0	DMATA[5:0]	DMA transfer access start address This field defines the start address of accessing the TIMERx_DMATB register by DMA. When the first access to the TIMERx_DMATB register is done, this bit-field specifies the address just accessed. And then the address of the second access to the TIMERx_DMATB register will be (start address + 0x4). 6'b000000: TIMERx_CTL0 6'b000001: TIMERx_CTL1 … In a word: start address = TIMERx_CTL0 + DMATA*4

DMA transfer buffer register (TIMERx_DMATB)

Address offset: 0xE4

Reset value: 0x0000 0000

This register has to be accessed by word (32-bit).

31	30	29	28	27	26	25	24	23	22	21	20	19	18	17	16
DMATB[31:16]															
rw															

15	14	13	12	11	10	9	8	7	6	5	4	3	2	1	0
DMATB[15:0]															
rw															

Bits	Fields	Descriptions
31:0	DMATB[31:0]	DMA transfer buffer When a read or write operation is assigned to this register, the register located at the address ranges from (start address) to (start address + transfer count * 4) will be accessed.

The transfer count is calculated by hardware, and ranges from 0 to DMATC.

Configuration register (TIMERx_CFG)

Address offset: 0xFC

Reset value: 0x0000 0000

This register has to be accessed by word (32-bit).

31	30	29	28	27	26	25	24	23	22	21	20	19	18	17	16
Reserved															

15	14	13	12	11	10	9	8	7	6	5	4	3	2	1	0
Reserved												CCUSEL	CREPSEL	CHVSEL	OUTSEL
												rw	rw	rw	rw

Bits	Fields	Descriptions
31:4	Reserved	Must be kept at reset value.
3	CCUSEL	Commutation control shadow register update select This bit is valid only when the CCUC[2:0] bit-field are set to 100. 0: The shadow registers update when the counter generates an overflow/ underflow event. 1: The shadow registers update when the counter generates an overflow/ underflow event and the repetition counter value is zero.
2	CREPSEL	The counter repetition register select This bit is used to select the counter repetition register. 0: The update event rate is depended to TIMERx_CREP0 register 1: The update event rate is depended to TIMERx_CREP1 register
1	CHVSEL	Write CHxVAL register selection bit This bit-field is set and reset by software. 1: If the value to be written to the CHxVAL register is the same as the value of CHxVAL register, the write access is ignored. 0: No effect.
0	OUTSEL	The output value selection bit This bit-field is set and reset by software. 1: If POEN bit and IOS bit are 0, the output is disabled. 0: No effect.

24.5. Basic timer (TIMERx, x=5,6,50,51)

24.5.1. Overview

The basic timer module(TIMER5/6/50/51) has a 32-bit or 64-bit counter that can be used as an unsigned counter. The basic timer can be configured to generate a DMA request and a TRGO0 to connect to DAC.

24.5.2. Characteristics

- Counter width: 32 bits (TIMER5/6), 64 bits (TIMER50/51).
- Source of count clock is internal clock only.
- Multiple counter modes: count up.
- Programmable prescaler: 16 bits. The factor can be changed ongoing.
- Auto reload function.
- Interrupt output or DMA request: update event.

24.5.3. Block diagram

Figure 24-126. Basic timer block diagram provides details on the internal configuration of the basic timer.

Figure 24-126. Basic timer block diagram

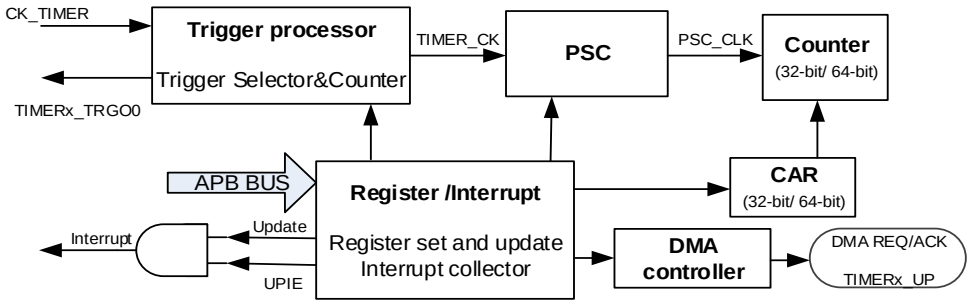

24.5.4. Function overview

Clock selection

The basic TIMER can only be clocked by the internal timer clock CK_TIMER, which is from the source named CK_TIMER in RCU

The TIMER_CK, driven counter's prescaler to count, is equal to CK_TIMER used to drive the counter prescaler. When the CEN is set, the CK_TIMER will be divided by PSC value to generate PSC_CLK.

Figure 24-127. Normal mode, internal clock divided by 1

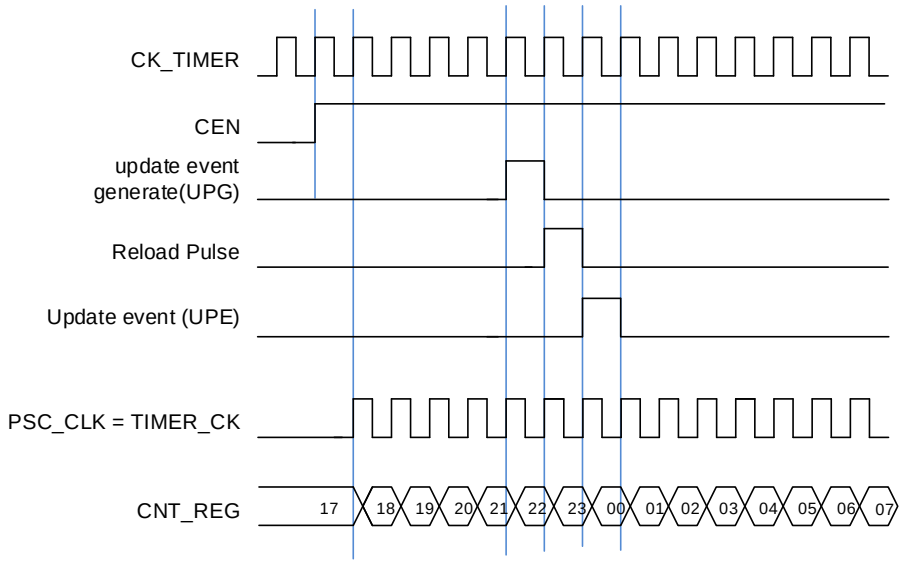

Prescaler

The prescaler can divide the timer clock (TIMER_CK) to a counter clock (PSC_CLK) by any factor ranging from 1 to 65536. It is controlled by prescaler register (TIMERx_PSC) which can be changed ongoing, but it is adopted at the next update event.

Figure 24-128. Counter timing diagram with prescaler division change from 1 to 2

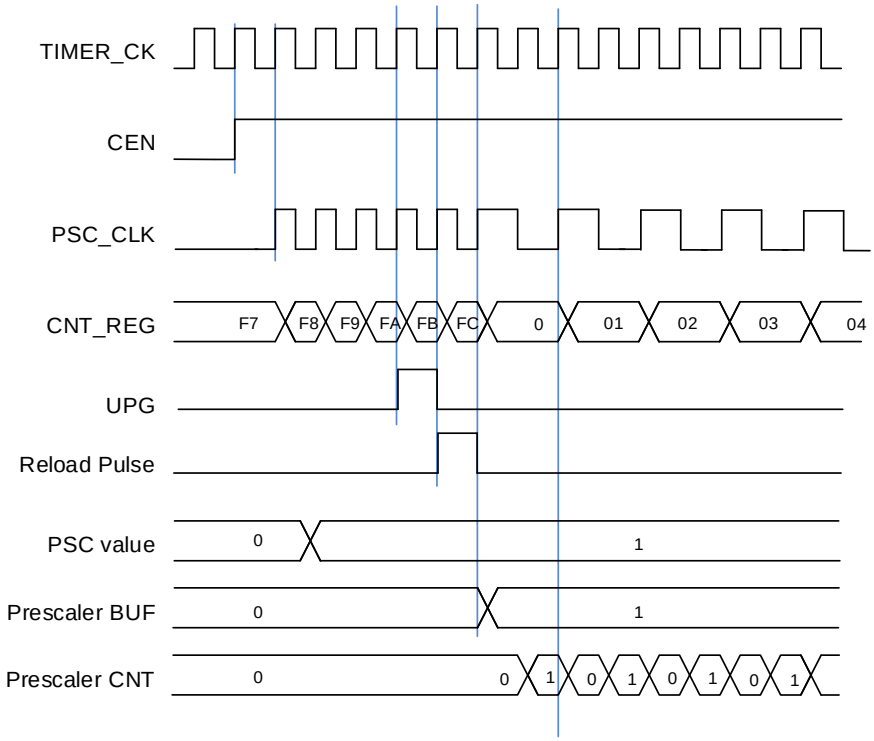

Up counting mode

In this mode, the counter counts up continuously from 0 to the counter reload value, which is defined in the TIMERx_CAR/ TIMERx_CARL/ TIMERx_CARH register, in a count-up direction. Once the counter reaches the counter reload value, the counter restarts from 0. The update event is generated each time when counter overflows. The counting direction bit DIR in the TIMERx_CTL0 register should be set to 0 for the up counting mode.

Whenever, if the update event software trigger is enabled by setting the UPG bit in the TIMERx_SWEVG register, the counter value will be initialized to 0 and an update event will be generated.

If the UPDIS bit in TIMERx_CTL0 register is set, the update event is disabled.

When an update event occurs, all the registers (auto reload register, prescaler register) are updated.

The following figures show some examples of the counter behavior for different clock prescaler factor when TIMERx_CAR=0x99 (TIMERx, x=5,6).

Figure 24-129. Timing chart of up counting mode, PSC=0/2 (TIMERx, x=5,6)

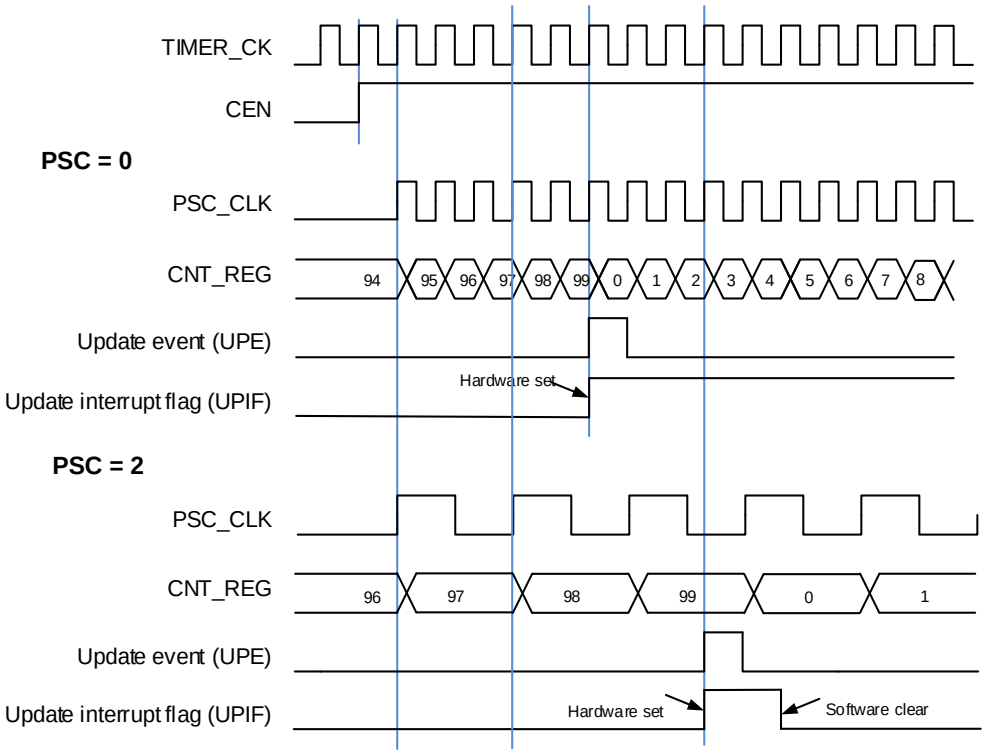

Figure 24-130. Timing chart of up counting mode, change TIMERx_CAR ongoing

(TIMERx, x=5,6)

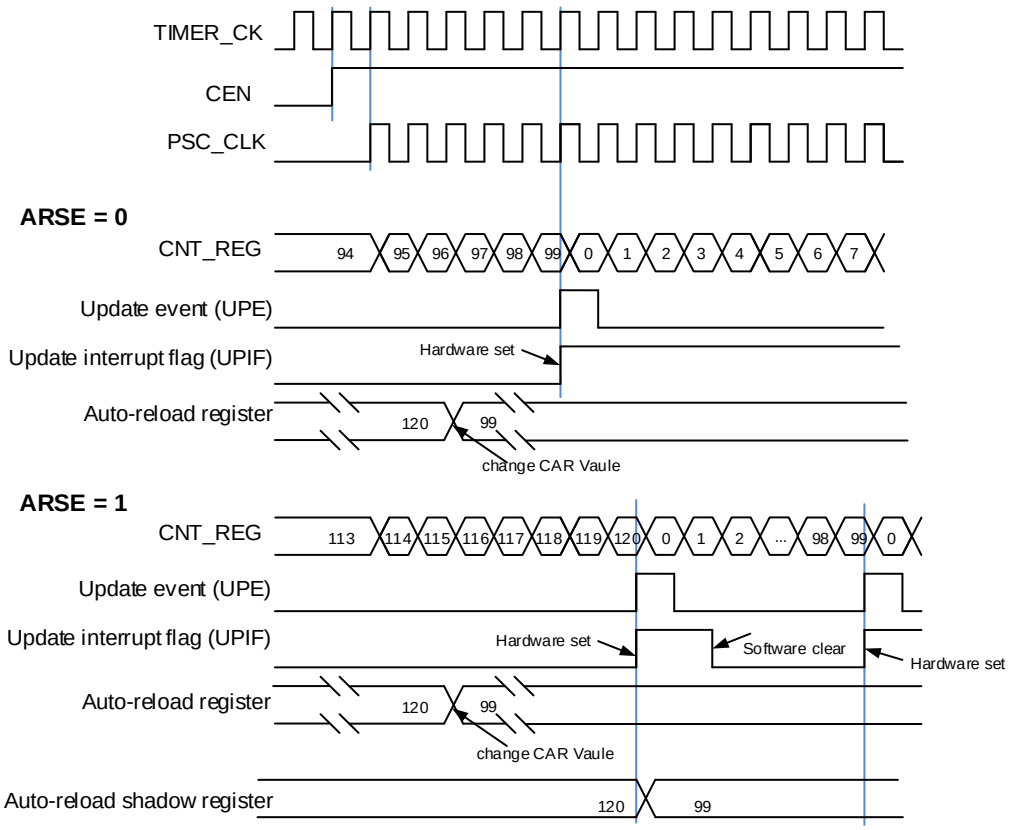

UPIF bit backup

The UPIF bit backup function is enabled by setting UPIFBUEN in the TIMERx_CTL0 register. The UPIF and UPIFBU bits are fully synchronized and without latency.

By using this function, the UPIF bit in the TIMERx_INTF register will be backuped to the UPIFBU bit in the TIMERx_CNT register. This can avoid conflicts when reading the counter and interrupt processing.

Timer debug mode

When the Cortex®-M7 is halted, and the TIMERx_HOLD configuration bit in DBG_CTL register set to 1, the TIMERx counter stops.

24.5.5. Registers definition (TIMERx, x=5,6,50,51)

TIMER5 base address: 0x4000 1000

TIMER6 base address: 0x4000 1400

TIMER50 base address: 0x4000 F000

TIMER51 base address: 0x4000 F400

Control register 0 (TIMERx_CTL0)

Address offset: 0x00
Reset value: 0x0000 0000

This register has to be accessed by word (32-bit).

31	30	29	28	27	26	25	24	23	22	21	20	19	18	17	16
Reserved															

15	14	13	12	11	10	9	8	7	6	5	4	3	2	1	0
Reserved				UPIFBUEN	Reserved			ARSE	Reserved			SPM	UPS	UPDIS	CEN
				rw				rw				rw	rw	rw	rw

Bits	Fields	Descriptions
31:12	Reserved	Must be kept at reset value.
11	UPIFBUEN	UPIF bit backup enable 0: Backup disable. UPIF bit is not backuped to UPIFBU bit in TIMERx_CNT/ TIMERx_CNTH register. 1: Backup enabled. UPIF bit is backuped to UPIFBU bit in TIMERx_CNT/ TIMERx_CNTH register.
10:8	Reserved	Must be kept at reset value.
7	ARSE	Auto-reload shadow enable 0: The shadow register for TIMERx_CAR/ TIMERx_CARL/ TIMERx_CARH register is disabled 1: The shadow register for TIMERx_CAR/ TIMERx_CARL/ TIMERx_CARH register is enabled
6:4	Reserved	Must be kept at reset value.
3	SPM	Single pulse mode. 0: Single pulse mode is disabled. Counter continues after an update event. 1: Single pulse mode is enabled. The CEN bit is cleared by hardware and the counter stops at next update event.
2	UPS	Update source

		This bit is used to select the update event sources by software. 0: When enabled, any of the following events generates an update interrupt or a DMA request: – The UPG bit is set – The counter generates an overflow event – The slave mode controller generates an update event. 1: When enabled, only counter overflow generates an update interrupt or a DMA request.
1	UPDIS	Update disable. This bit is used to enable or disable the update event generation. 0: Update event enable. The update event is generated and the buffered registers are loaded with their preloaded values when one of the following events occurs: – The UPG bit is set – The counter generates an overflow event – The slave mode controller generates an update event. 1: Update event disable. The buffered registers keep their value, while the counter and the prescaler are reinitialized if the UG bit is set or the slave mode controller generates a hardware reset event.
0	CEN	Counter enable 0: Counter disable 1: Counter enable The CEN bit must be set by software when timer works in external clock mode, pause mode or decoder mode. While in event mode, the hardware can set the CEN bit automatically.

Control register 1 (TIMERx_CTL1)

Address offset: 0x04
Reset value: 0x0000 0000

This register has to be accessed by word (32-bit).

31	30	29	28	27	26	25	24	23	22	21	20	19	18	17	16
Reserved															

15	14	13	12	11	10	9	8	7	6	5	4	3	2	1	0
Reserved									MMC0[2:0]			Reserved			
									rw						

Bits	Fields	Descriptions
31:7	Reserved	Must be kept at reset value.
6:4	MMC0[2:0]	Master mode control 0 These bits control the selection of TRGO0 signal, which is sent by master timer to

		slave timer for synchronization function. 000: Reset. When the UPG bit in the TIMERx_SWEVG register is set or a reset is generated by the slave mode controller, a TRGO0 pulse occurs. And in the latter case, the signal on TRGO0 is delayed compared to the actual reset. 001: Enable. This mode is used to start several timers at the same time or control a slave timer to be enabled in a period. In this mode, the master mode controller selects the counter enable signal as TRGO0. The counter enable signal is set when CEN control bit is set or the trigger input in pause mode is high. There is a delay between the trigger input in pause mode and the TRGO0 output, except if the master-slave mode is selected. 010: Update. In this mode, the master mode controller selects the update event as TRGO0. 100~111: Reserved.
3:0	Reserved	Must be kept at reset value.

Interrupt enable register (TIMERx_DMAINTEN)

Address offset: 0x0C

Reset value: 0x0000 0000

This register has to be accessed by word (32-bit).

31	30	29	28	27	26	25	24	23	22	21	20	19	18	17	16
Reserved															

15	14	13	12	11	10	9	8	7	6	5	4	3	2	1	0
Reserved							UPDEN	Reserved							UPIE
							rw								rw

Bits	Fields	Descriptions
31:9	Reserved	Must be kept at reset value.
8	UPDEN	Update DMA request enable 0: Disabled 1: Enabled
7:1	Reserved	Must be kept at reset value.
0	UPIE	Update interrupt enable 0: Disabled 1: Enabled

Interrupt flag register (TIMERx_INTF)

Address offset: 0x10

Reset value: 0x0000 0000

This register has to be accessed by word (32-bit).

31	30	29	28	27	26	25	24	23	22	21	20	19	18	17	16
Reserved															

15	14	13	12	11	10	9	8	7	6	5	4	3	2	1	0
Reserved															UPIF
															rc_w0

Bits	Fields	Descriptions
31:1	Reserved	Must be kept at reset value.
0	UPIF	Update interrupt flag This bit is set by hardware when an update event occurs and cleared by software. 0: No update interrupt occurred 1: Update interrupt occurred

Software event generation register (TIMERx_SWEVG)

Address offset: 0x14

Reset value: 0x0000 0000

This register has to be accessed by word (32-bit).

31	30	29	28	27	26	25	24	23	22	21	20	19	18	17	16
Reserved															

15	14	13	12	11	10	9	8	7	6	5	4	3	2	1	0
Reserved															UPG
															w

Bits	Fields	Descriptions
31:1	Reserved	Must be kept at reset value.
0	UPG	This bit can be set by software, and automatically cleared by hardware. When this bit is set, the counter is cleared. The prescaler counter is cleared at the same time. 0: No generate an update event 1: Generate an update event

Counter register (TIMERx_CNT) (TIMERx, x=5,6)

Address offset: 0x24

Reset value: 0x0000 0000

This register has to be accessed by word (32-bit).

31	30	29	28	27	26	25	24	23	22	21	20	19	18	17	16
CNT[31]	CNT[30:16]														

UPIFBU	
rw/ r	

15	14	13	12	11	10	9	8	7	6	5	4	3	2	1	0
CNT[15:0]															
rw															

UPIFBUEN = 0:

Bits	Fields	Descriptions
31:0	CNT[31:0]	This bit-field indicates the current counter value. Writing to this bit-field can change the value of the counter.

UPIFBUEN = 1:

Bits	Fields	Descriptions
31	UPIFBU	UPIF bit backup This bit is a backup of UPIF bit in TIMERx_INTF register, and read-only. This bit is only valid when UPIFBUEN = 1. If the UPIFBUEN =0, this bit is reserved and read the result is 0.
30	CNT[30:0]	This bit-field indicates the current counter value. Writing to this bit-field can change the value of the counter.

Counter low register (TIMERx_CNTL) (TIMERx, x=50,51)

Address offset: 0x24

Reset value: 0x0000 0000

This register has to be accessed by word (32-bit).

31	30	29	28	27	26	25	24	23	22	21	20	19	18	17	16
CNTL[31:16]															
rw															

15	14	13	12	11	10	9	8	7	6	5	4	3	2	1	0
CNTL[15:0]															
rw															

Bits	Fields	Descriptions
31:0	CNTL[31:0]	This bit-field indicates the current counter low value. Writing to this bit-field can change the value of the counter.

Prescaler register (TIMERx_PSC)

Address offset: 0x28

Reset value: 0x0000 0000

This register has to be accessed by word (32-bit).

31	30	29	28	27	26	25	24	23	22	21	20	19	18	17	16

Reserved

15	14	13	12	11	10	9	8	7	6	5	4	3	2	1	0
PSC[15:0]															
rw															

Bits	Fields	Descriptions
31:16	Reserved	Must be kept at reset value.
15:0	PSC[15:0]	Prescaler value of the counter clock The PSC clock is divided by (PSC+1) to generate the counter clock. The value of this bit-field will be loaded to the corresponding shadow register at every update event.

Counter auto reload register (TIMERx_CAR) (TIMERx, x=5,6)

Address offset: 0x2C
Reset value: 0xFFFF FFFF

This register has to be accessed by word (32-bit).

31	30	29	28	27	26	25	24	23	22	21	20	19	18	17	16
CARL[31:16]															
rw															

15	14	13	12	11	10	9	8	7	6	5	4	3	2	1	0
CARL[15:0]															
rw															

Bits	Fields	Descriptions
31:0	CARL[31:0]	Counter auto reload value This bit-field specifies the auto reload value of the counter.

Counter auto reload low register (TIMERx_CARL) (TIMERx, x=50,51)

Address offset: 0x2C
Reset value: 0xFFFF FFFF

This register has to be accessed by word (32-bit).

31	30	29	28	27	26	25	24	23	22	21	20	19	18	17	16
CARLL[31:16]															
rw															

15	14	13	12	11	10	9	8	7	6	5	4	3	2	1	0
CARLL[15:0]															
rw															

Bits	Fields	Descriptions
31:0	CARLL[31:0]	Counter auto reload low value This bit-field specifies the auto reload low value of the counter.

Counter high register (TIMERx_CNTH) (TIMERx, x=50,51)

Address offset: 0xD0

Reset value: 0x0000 0000

This register has to be accessed by word (32-bit).

31	30	29	28	27	26	25	24	23	22	21	20	19	18	17	16
CNTH[31] UPIFBU	CNTH[63:48]														
rw/ r	rw														

15	14	13	12	11	10	9	8	7	6	5	4	3	2	1	0
CNTH[47:32]															
rw															

UPIFBUEN = 0:

Bits	Fields	Descriptions
31:0	CNTH[63:32]	This bit-field indicates the current counter high value. Writing to this bit-field can change the value of the counter.

UPIFBUEN = 1:

Bits	Fields	Descriptions
31	UPIFBU	UPIF bit backup This bit is a backup of UPIF bit in TIMERx_INTF register, and read-only. This bit is only valid when UPIFBUEN = 1. If the UPIFBUEN =0, this bit is reserved and read the result is 0.
30:0	CNTH[62:32]	This bit-field indicates the current counter high value. Writing to this bit-field can change the value of the counter.

Counter auto reload high register 1(TIMERx_CARH)(TIMERx, x=50,51)

Address offset: 0xD4

Reset value: 0xFFFF FFFF

This register has to be accessed by word (32-bit).

31	30	29	28	27	26	25	24	23	22	21	20	19	18	17	16
CARLH[63:48]															
rw															

15	14	13	12	11	10	9	8	7	6	5	4	3	2	1	0
CARLH[47:32]															
rw															

Bits	Fields	Descriptions
31:0	CARLH[63:32]	Counter auto reload high value This bit-field specifies the auto reload high value of the counter.

25. Universal synchronous / asynchronous receiver / transmitter (USART)

25.1. Overview

The Universal Synchronous / Asynchronous Receiver / Transmitter (USART) provides a flexible serial data exchange interface. Data frames can be transferred in full duplex or half duplex mode, synchronously or asynchronously through this interface. A programmable baud rate generator divides the UCLK (CK_APBx, CK_AHB, CK_LXTAL or CK_IRC64MDIV) to produces a dedicated wide range baudrate clock for the USART transmitter and receiver.

Besides the standard asynchronous receiver and transmitter mode, the USART implements several other types of serial data exchange modes, such as IrDA (infrared data association) SIR mode, smartcard mode, LIN (local interconnection network) mode, half-duplex mode and synchronous mode. It also supports multiprocessor communication mode, and hardware flow control protocol (CTS / RTS). The data frame can be transferred from LSB or MSB bit. The polarity of the TX / RX pins can be configured independently and flexibly.

All USARTs support DMA function for high-speed data communication.

25.2. Characteristics

- NRZ standard format.
- Asynchronous, full duplex communication.
- Half duplex single wire communications.
- Receive / Transmit FIFO function.
- Address match feature in the receiver to reduce address mark wakeup ISR overhead.
- Dual clock domain:
  - Asynchronous PCLK and USART clock.
  - Baud rate programming independent from the UCLK reprogramming.
- Programmable baud-rate generator allowing speed up to 37.5 MBits/s when the clock frequency is 300 MHz and oversampling is by 8.
- Fully programmable serial interface characteristics:
  - A data word (7 / 8 / 9 or 10 bits) LSB or MSB first.
  - Even, odd or no-parity bit generation / detection.
  - 0.5, 1, 1.5 or 2 stop bit generation.
- Swappable Tx / Rx pin.
- Configurable data polarity.
- Hardware modem operations (CTS / RTS) and RS485 drive enable.
- Configurable multibuffer communication using centralized DMA.
- Separate enable bits for transmitter and receiver.

- Parity control:
  - Transmits parity bit.
  - Checks parity of received data byte.
- LIN break generation and detection.
- IrDA support.
- Synchronous mode and transmitter clock output for synchronous transmission.
- ISO 7816-3 compliant smartcard interface:
  - Character mode (T = 0).
  - Block mode (T = 1).
  - Direct and inverse convention.
- Multiprocessor communication:
  - Enter into mute mode if address match does not occur.
  - Wake up from mute mode by idle line or address match detection.
- Support for ModBus communication:
  - Timeout feature.
  - CR / LF character recognition.
- Wake up from deep-sleep mode:
  - By standard RBNE interrupt.
  - By WUF interrupt.
- Various status flags:
  - Flags for transfer detection: Receive buffer not empty (RBNE), Receive FIFO full (RFF), Receive FIFO empty (RFE), Receive FIFO threshold reached(RFT), Transmit buffer empty (TBE), transfer complete (TC), Transmit FIFO not full(TFNF), Transmit FIFO empty(TFE), Transmit FIFO threshold reached(TFT).
  - Flags for error detection: overrun error (ORERR), noise error (NERR), frame error (FERR) and parity error (PERR).
  - Flag for hardware flow control: CTS changes (CTSF).
  - Flag for LIN mode: LIN break detected (LBDF).
  - Flag for multiprocessor communication: IDLE frame detected (IDLEF).
  - Flag for ModBus communication: address/character match (AMF) and receiver timeout (RTF).
  - Flags for smartcard block mode: end of block (EBF) and receiver timeout (RTF).
  - Wakeup from deep-sleep mode flag.
  - Interrupt occurs at these events when the corresponding interrupt enable bits are set.

While USART0 / USART1 / USART2 / USART5 is fully implemented, UART3 / UART4 / UART6 / UART7 is only partially implemented with the following features not supported.

- Smartcard mode.
- IrDA SIR ENDEC block.
- LIN mode.
- Dual clock domain and wakeup from deep-sleep mode.
- Receiver timeout interrupt.
- ModBus communication.
- Synchronous mode.

25.3. Function overview

The interface is externally connected to another device by the main pins listed in ***Table 25-1. Description of USART important pins***.

Table 25-1. Description of USART important pins

Pin	Type	Description
RX	Input	Receive Data
TX	Output I/O (single-wire / smartcard mode)	Transmit Data. High level When enabled but nothing to be transmitted
CK	Output	Serial clock for synchronous communication
nCTS	Input	Clear to send in Hardware flow control mode
nRTS	Output	Request to send in Hardware flow control mode

Figure 25-1. USART module block diagram

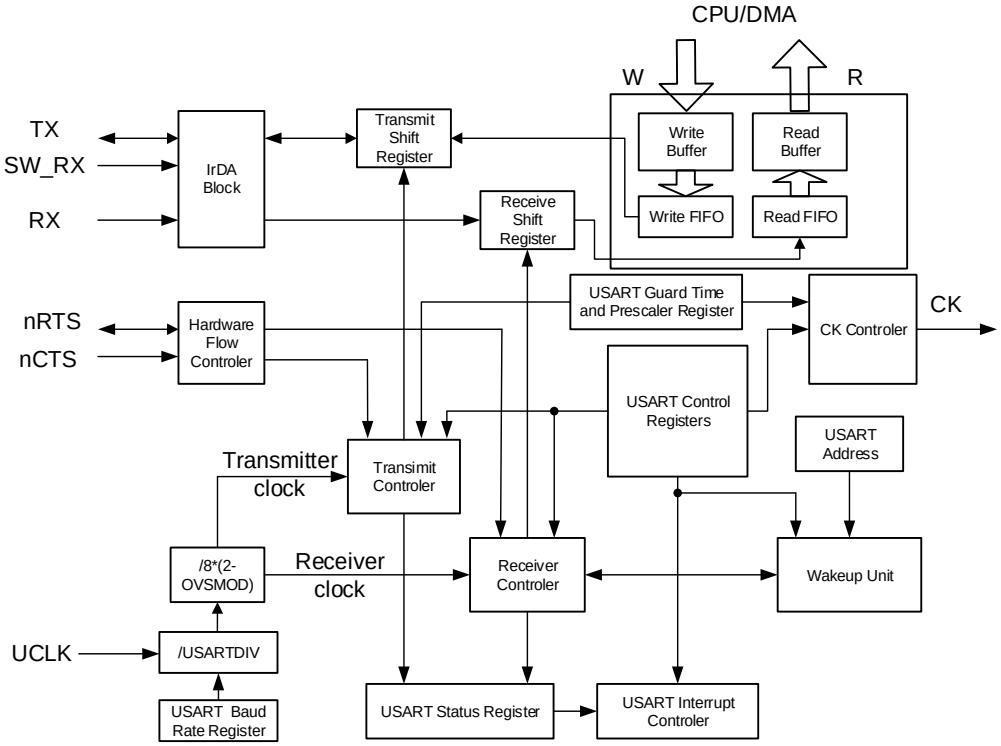

25.3.1. USART frame format

The USART frame starts with a start bit and ends up with a number of stop bits. The length of the data frame is configured by the WL0 bit and WL1 bit in the USART_CTL0 register. The last data bit can be used as parity check bit by setting the PCEN bit of in USART_CTL0 register. When the WL1 bit and WL0 bit are reset, the parity bit is the 7th bit. When the WL1 bit is reset and WL0 bit is set, the parity bit is the 8th bit. When WL1 bit is set and the WL0 bit is reset, the parity bit is the 6th bit. When WL1 bit is set and the WL0 bit is set, the parity bit is the 9th bit. The method of calculating the parity bit is selected by the PM bit in USART_CTL0

register.

Figure 25-2. USART character frame (8 bits data and 1 stop bit)

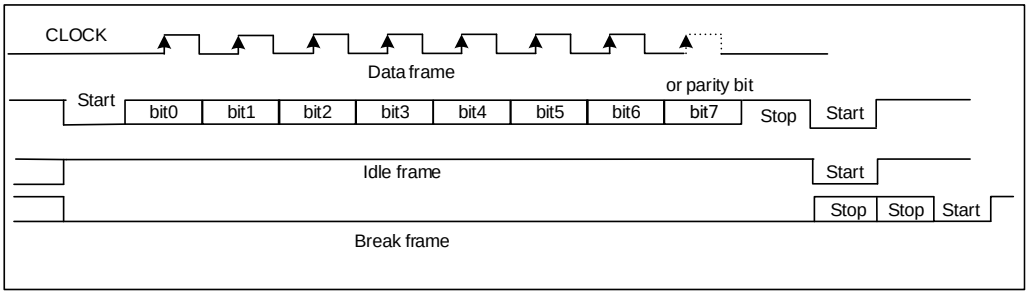

In transmission and reception, the number of stop bits can be configured by the STB[1:0] bits in the USART_CTL1 register.

Table 25-2. Configuration of stop bits

STB[1:0]	stop bit length (bit)	usage description
00	1	Default value
01	0.5	Smartcard mode for receiving
10	2	Normal USART and single-wire modes
11	1.5	Smartcard mode for transmitting and receiving

In an idle frame, all the frame bits are logic 1. The frame length is equal to the normal USART frame.

The break frame structure is a number of low bits followed by the configured number of stop bits. The transfer speed of a USART frame depends on the frequency of the UCLK, the configuration of the baud rate generator and the oversampling mode.

25.3.2. Baud rate generation

The baud-rate divider is a 16-bit number which consists of a 12-bit integer and a 4-bit fractional part. The number formed by these two values is used by the baud rate generator to determine the bit period. Having a fractional baud-rate divider allows the USART to generate all the standard baud rates.

The baud-rate divider (USARTDIV) has the following relationship with the UCLK:

In case of oversampling by 16, the equation is:

$$\text{USARTDIV} = \frac{\text{UCLK}}{16 \times \text{Baud Rate}} \quad (25\text{-}1)$$

In case of oversampling by 8, the equation is:

$$\text{USARTDIV} = \frac{\text{UCLK}}{8 \times \text{Baud Rate}} \quad (25\text{-}2)$$

For example, when oversampled by 16:

1. Get USARTDIV by caculating the value of USART_BAUD:
   If USART_BAUD = 0x21D, then INTDIV = 33 (0x21), FRADIV = 13 (0xD).

USARTDIV=33 + 13 / 16 = 33.81.

2. Get the value of USART_BAUD by calculating the value of USARTDIV:
   If USARTDIV = 30.37, then INTDIV = 30 (0x1E).
   16*0.37 = 5.92, the nearest integer is 6, so FRADIV = 6 (0x6).
   USART_BAUD = 0x1E6.

   Note: If the roundness of FRADIV is 16 (overflow), the carry must be added to the integer part.

25.3.3. USART transmitter

If the transmit enable bit (TEN) in USART_CTL0 register is set, when the transmit data buffer is not empty, the transmitter shifts out the transmit data frame through the TX pin. The polarity of the TX pin can be configured by the TINV bit in the USART_CTL1 register. Clock pulses can output through the CK pin.

After the TEN bit is set, an idle frame will be sent. The TEN bit should not be cleared while the transmission is ongoing.

After power on, the TBE bit is high by default. Data can be written to the USART_TDATA when the TBE bit in the USART_STAT register is asserted. The TBE bit is cleared by writing USART_TDATA register and it is set by hardware after the data is put into the transmit shift register. If a data is written to the USART_TDATA register while a transmission is ongoing, it will be firstly stored in the transmit buffer, and transferred to the transmit shift register after the current transmission is done. If a data is written to the USART_TDATA register while no transmission is ongoing, the TBE bit will be cleared and set soon, because the data will be transferred to the transmit shift register immediately.

If a frame is transmitted and the TBE bit is asserted, the TC bit of the USART_STAT register will be set. An interrupt will be generated if the corresponding interrupt enable bit (TCIE) is set in the USART_CTL0 register.

The USART transmit procedure is shown in ***Figure 25-3. USART transmit procedure***. The software operating process is as follows:

1. Write the WL0 bit and WL1 bit in USART_CTL0 to set the data bits length.
2. Set the STB[1:0] bits in USART_CTL1 to configure the number of stop bits.
3. Enable DMA (DENT bit) in USART_CTL2 if multibuffer communication is selected.
4. Set the baud rate in USART_BAUD.
5. Set the UEN bit in USART_CTL0 to enable the USART.
6. Set the TEN bit in USART_CTL0.
7. Wait for the TBE being asserted.
8. Write the data to the USART_TDATA register.
9. Repeat step7-8 for each data, if DMA is not enabled.
10. Wait until TC=1 to finish.

Figure 25-3. USART transmit procedure

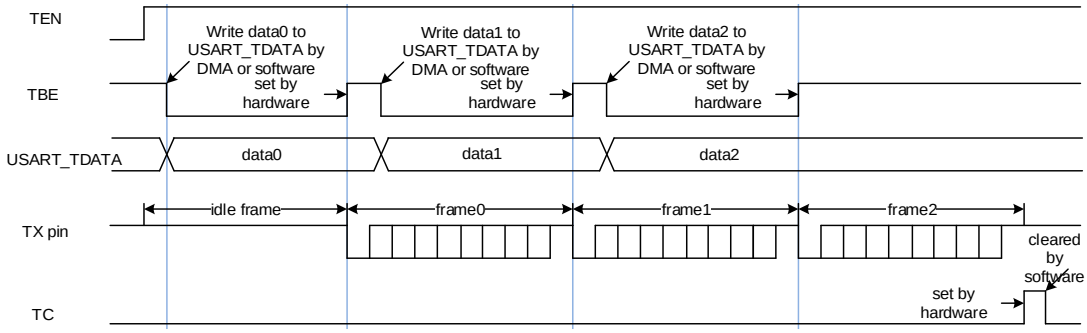

It is necessary to wait for the TC bit to be asserted before disabling the USART or entering the power saving mode. The TC bit can be cleared by set the TCC bit in USART_INTC register.

The break frame is sent when the SBKCMD bit is set, and SBKCMD bit is reset after the transmission.

25.3.4. USART receiver

After power on, the USART receiver can be enabled by the following procedure:

1. Write the WL0 bit and WL1 bit in USART_CTL0 to set the data bits length.
2. Set the STB[1:0] bits in USART_CTL1.
3. Enable DMA (DENR bit) in USART_CTL2 if multibuffer communication is selected.
4. Set the baud rate in USART_BAUD.
5. Set the UEN bit in USART_CTL0 to enable the USART.
6. Set the REN bit in USART_CTL0.

After being enabled, the receiver receives a bit stream after a valid start pulse has been detected. Detection on noisy error, parity error, frame error and overrun error is performed during the reception of a frame.

When a frame is received, the RBNE bit in USART_STAT is asserted, an interrupt is generated if the corresponding interrupt enable bit (RBNEIE) is set in the USART_CTL0 register. The status of the reception are stored in the USART_STAT register.

The software can get the received data by reading the USART_RDATA register directly, or through DMA. The RBNE bit is cleared by a read operation on the USART_RDATA register, whatever it is performed by software directly, or through DMA.

The REN bit should not be disabled when reception is ongoing, or the current frame will be lost.

By default, the receiver gets three samples to evaluate the value of a frame bit. If the oversampling 8 mode is enabled, the 3rd, 4th and 5th samples are used, while in the oversampling 16 mode, the 7th, 8th, and 9th samples are used. If two or more samples of a frame bit is 0, the frame bit is confirmed as a 0, else 1. If the value of the three samples of any bit are not the same, whatever it is a start bit, data bit, parity bit or stop bit, a noisy error (NERR) status will be generated for the frame. An interrupt will be generated, If the ERRIE

bit in USART_CTL2 register is set. If the OSB bit in USART_CTL2 register is set, the receiver gets only one sample to evaluate a bit value. In this situation, no noisy error will be detected.

Figure 25-4. Oversampling method of a receive frame bit (OSB = 0)

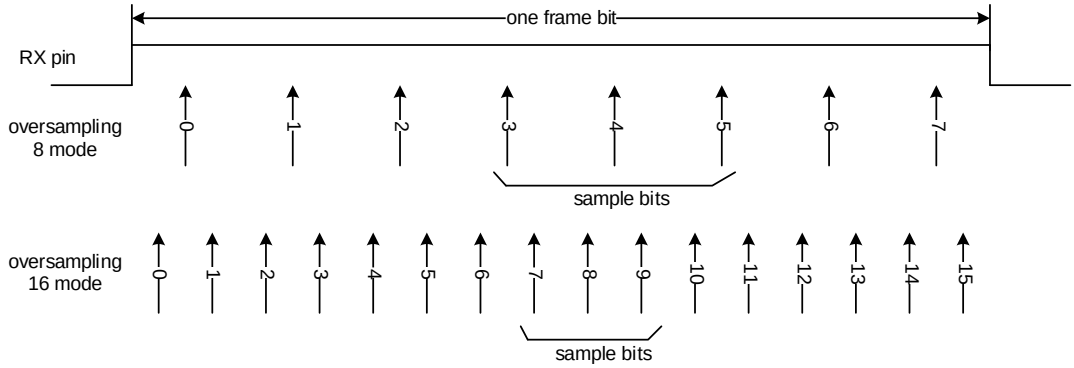

If the parity check function is enabled by setting the PCEN bit in the USART_CTL0 register, the receiver calculates the expected parity value while receiving a frame. The received parity bit will be compared with this expected value. If they are not the same, the parity error (PERR) bit in USART_STAT register will be set. An interrupt is generated, if the PERRIE bit in USART_CTL0 register is set.

If the RX pin is evaluated as 0 during a stop bit, the frame error (FERR) bit in USART_STAT register will be set. An interrupt is generated, If the ERRIE bit in USART_CTL2 register is set. According to the configuration of the stop bit, there are the following situations:

- 0.5 stop bit: When 0.5 stop bit, stop bit is not sampled.
- 1 stop bit: When 1 stop bit, sampling in the middle of stop bit.
- 1.5 stop bits: When 1.5 stop bits, the 1.5 stop bits are divided into 2 parts: the 0.5 stop bit part is not sampled and sampling in the middle of 1 stop bit.
- 2 stop bits: When 2 stop bits, if a frame error is detected during the first stop bit, the frame error flag is set, the second stop bit is not checked frame error. If no frame error is detected during the first stop bit, then continue to check the second stop bit for frame error.

When a frame is received, if the RBNE bit is not cleared yet, the last frame will not be stored in the receive data buffer. The overrun error (ORERR) bit in USART_STAT register will be set. An interrupt is generated, if the ERRIE bit in USART_CTL2 register is set, or if the RBNEIE is set.

If a noise error (NERR), parity error (PERR), frame error (FERR) or overrun error (ORERR) occurs during reception, NERR, PERR, FERR or ORERR will be set at the same time with RBNE. If the receive DMA is not enabled, when the RBNE interrupt occurs, software need to check whether there is a noise error, parity error, frame error or overrun error.

25.3.5. Use DMA for data buffer access

To reduce the burden of the processor, DMA can be used to access the transmitting and receiving data buffer. The DENT bit in USART_CTL2 is used to enable the DMA transmission,

and the DENR bit in USART_CTL2 is used to enable the DMA reception.

When DMA is used for USART transmission, DMA transfers data from internal SRAM to the transmit data buffer of the USART. The configuration step are shown in ***Figure 25-5. Configuration step when using DMA for USART transmission***.

Figure 25-5. Configuration step when using DMA for USART transmission

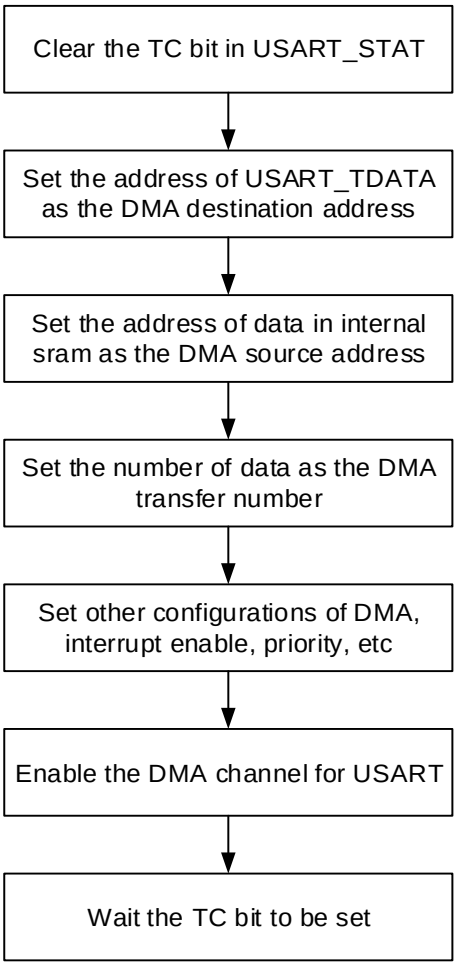

After all of the data frames are transmitted, the TC bit in USART_STAT is set. An interrupt occurs if the TCIE bit in USART_CTL0 is set.

When DMA is used for USART reception, DMA transfers data from the receive data buffer of the USART to the internal SRAM. The configuration steps are shown in ***Figure 25-6. Configuration step when using DMA for USART reception***. If the ERRIE bit in USART_CTL2 is set, interrupts can be generated by the error status bits (FERR, ORERR and NERR) in USART_STAT.

Figure 25-6. Configuration step when using DMA for USART reception

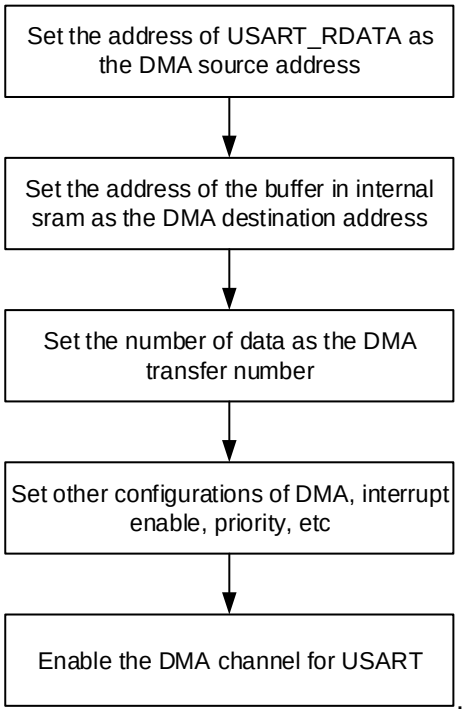

When the number of the data received by USART reaches the DMA transfer number, an end of transfer interrupt can be generated in the DMA module.

25.3.6. Hardware flow control

The hardware flow control function is realized by the nCTS and nRTS pins. The RTS flow control is enabled by writing ‘1’ to the RTSEN bit in USART_CTL2 and the CTS flow control is enabled by writing ‘1’ to the CTSEN bit in USART_CTL2.

Figure 25-7. Hardware flow control between two USARTs

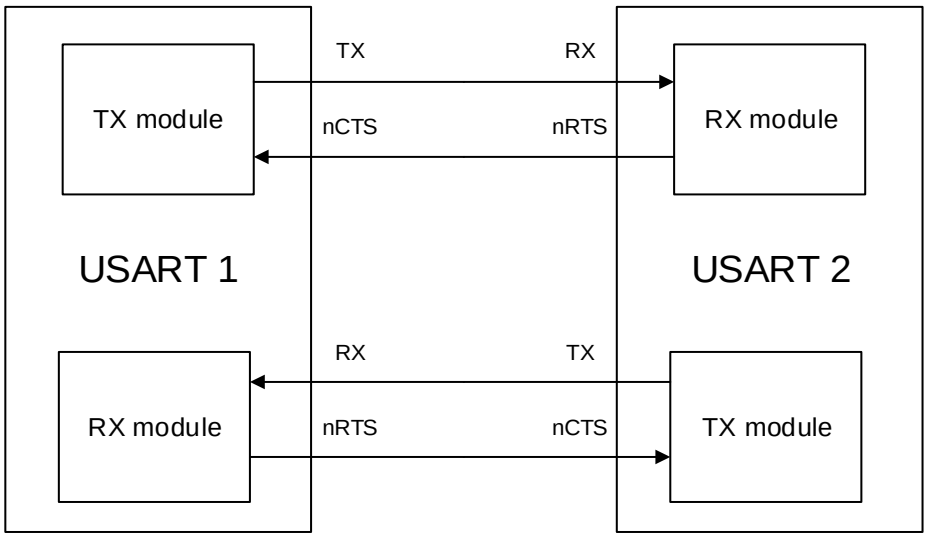

RTS flow control

The USART receiver outputs the nRTS, which reflects the status of the receive buffer. When data frame is received, the nRTS signal goes high to prevent the transmitter from sending next frame. The nRTS signal keeps high when the receive buffer is full.

CTS flow control

The USART transmitter monitors the nCTS input pin to decide whether a data frame can be transmitted. If the TBE bit in USART_STAT is '0' and the nCTS signal is low, the transmitter transmits the data frame. When the nCTS signal goes high during a transmission, the transmitter stops after the current transmission is accomplished.

Figure 25-8. Hardware flow control

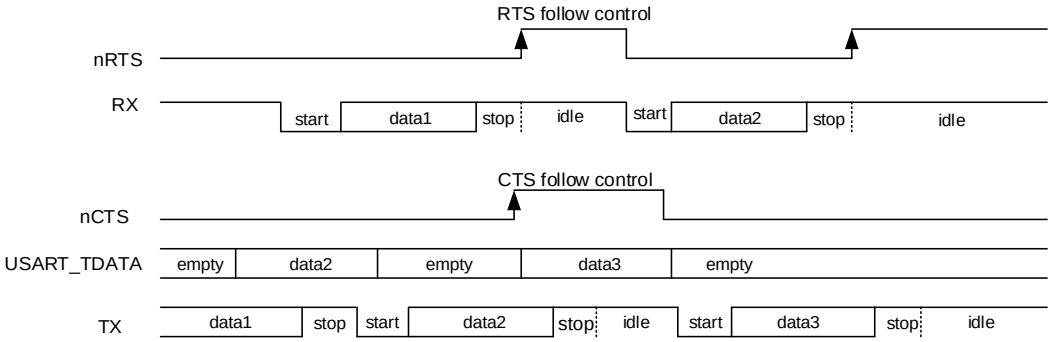

RS485 Driver Enable

The driver enable feature, which is enabled by setting bit DEM in the USART_CTL2 control register, allows the user to activate the external transceiver control, through the DE (Driver Enable) signal. The assertion time, which is programmed using the DEA [4:0] bits field in the USART_CTL0 control register, is the time between the activation of the DE signal and the beginning of the START bit. The de-assertion time, which is programmed using the DED [4:0] bits field in the USART_CTL0 control register, is the time between the end of the last stop bit and the de-activation of the DE signal. The polarity of the DE signal can be configured using the DEP bit in the USART_CTL2 control register.

25.3.7. Multi-processor communication

In multiprocessor communication, several USARTs are connected as a network. It will be a big burden for a device to monitor all of the messages on the RX pin. To reduce the burden of a device, software can put an USART module into a mute mode by writing 1 to the MMCMD bit in USART_CMD register.

If a USART is in mute mode, all of the receive status bits cannot be set. The USART can also be wake up by hardware by one of the two methods: idle frame method and address match method.

The idle frame wake up method is selected by default. If the RWU bit is reset, an idle frame is detected on the RX pin, the IDLEF bit in USART_STAT will be set. If the RWU bit is set, an idle frame is detected on the RX pin, the hardware clears the RWU bit and exits the mute mode. When it is woken up by an idle frame, the IDLEF bit in USART_STAT will not be set.

When the WM bit of in USART_CTL0 register is set, the MSB bit of a frame is detected as the address flag. If the address flag is high, the frame is treated as an address frame. If the address flag is low, the frame is treated as a data frame. If the LSB 4 or 7 bits, which are configured by the ADDM0 bit of the USART_CTL1 register or ADDM1 bit of the USART_CTL2, of an address frame is the same as the ADDR0 bits in the USART_CTL1 register or ADDR1 bits in the USART_CTL2 register, the hardware will clear the RWU bit and exits the mute mode. The RBNE bit will be set when the frame that wakes up the USART. The status bits are available in the USART_STAT register. If the LSB 4/7 bits of an address frame defers from the ADDR0 bits in the USART_CTL1 register or ADDR1 bits in the USART_CTL2 register, the hardware sets the RWU bit and enters mute mode automatically. In this situation, the RBNE bit is not set.

If the PCEN bit in USART_CTL0 is set, the MSB bit will be checked as the parity bit, and the bit preceding the MSB bit is detected as the address bit. If the ADDM0 or ADDM1 bit is set and the receive frame is a 8bit data, the LSB 7 bits will be compared with ADDR0[6:0] or ADDR1[6:0]. If the ADDM0 or ADDM1 bit is set and the receive frame is a 9bit data, the LSB 8 bits will be compared with ADDR0[7:0] or ADDR1[7:0].

Match address operation function in the same way for both ADDR0 and ADDR1, Note that the the position of the address mark is the same as the Parity Bit When parity is enabled for 8 bit and 9 bit data formats.

If only one of AMEN0 and AMEN1 bit is set, a match address is compared only with the associate ADDR0 or ADDR1 and data is transferred to the receive data buffer only on a match.

If AMEN0 and AMEN1 are all set, a match address is compared with both ADDR0 and ADDR1 and data is transferred only on a match with either ADDR0 or ADDR1. So, a second match adderss can be used for broadcast or general call address to serial bus.

Note: If the MEN bit is set, the WM bit is reset and the RWU bit is reset, an idle frame is detected on the RX pin, the IDLEF bit will be set. If the RWU bit is set, the IDLEF is not set. Otherwise, AMEN0 or AMEN1 must be set when using address match method to wakeup USART from mute mode.

25.3.8. LIN mode

The local interconnection network mode is enabled by setting the LMEN bit in USART_CTL1. The CKEN, STB[1:0] bit in USART_CTL1 and the SCEN, HDEN, IREN bits in USART_CTL2 should be cleared in LIN mode.

When transmitting a normal data frame, the transmission procedure is the same as the normal USART mode. The data bits length can only be 8. And the break frame is 13-bit ’0’, followed

by 1 stop bit.

The break detection function is totally independent of the normal USART receiver. So a break frame can be detected during the idle state or during a frame. The expected length of a break frame can be selected by configuring LBLEN in USART_CTL1. When the RX pin is detected at low state for a time that is equal to or longer than the expected break frame length (10 bits when LBLEN=0, or 11 bits when LBLEN=1), the LBDF bit in USART_STAT is set. An interrupt occurs if the LBDIE bit in USART_CTL1 is set.

As shown in ***Figure 25-9. Break frame occurs during idle state***, if a break frame occurs during the idle state on the RX pin, the USART receiver will receive an all '0' frame, with an asserted FERR status.

Figure 25-9. Break frame occurs during idle state

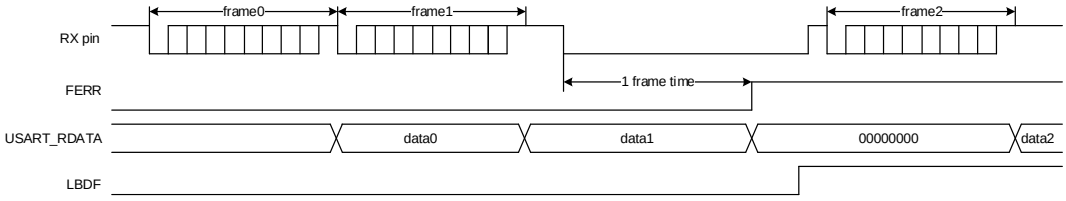

As shown in ***Figure 25-10. Break frame occurs during a frame***, if a break frame occurs during a frame on the RX pin, the FERR status will be asserted for the current frame.

Figure 25-10. Break frame occurs during a frame

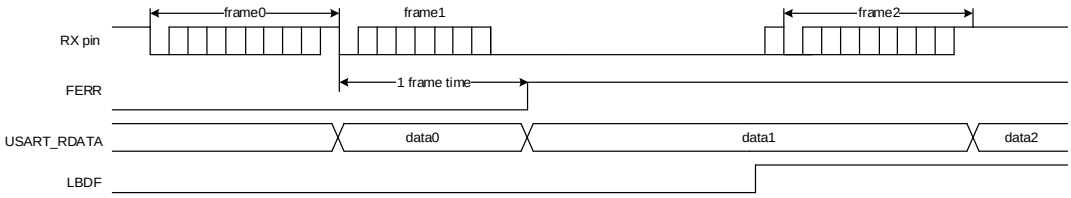

25.3.9. Synchronous mode

The USART can be used for full-duplex synchronous serial communications only in master mode, by setting the CKEN bit in USART_CTL1. The LMEN bit in USART_CTL1 and SCEN, HDEN, IREN bits in USART_CTL2 should be cleared in synchronous mode. The CK pin is the clock output of the synchronous USART transmitter, and can be only activated when the TEN bit is enabled. No clock pulse will be sent through the CK pin during the transmission of the start bit and stop bit. The CLEN bit in USART_CTL1 can be used to determine whether the clock is output or not during the last (address flag) bit transmission. The clock output is also not activated during idle and break frame sending. The CPH bit in USART_CTL1 can be used to determine whether data is captured on the first or the second clock edge. The CPL bit in USART_CTL1 can be used to configure the clock polarity in the USART synchronous idle state.

The CPL, CPH and CLEN bits in USART_CTL1 determine the waveform on the CK pin. Software can only change them when the USART is disabled (UEN = 0).

The clock is synchronized with the data transmitted. The receiver in synchronous mode samples the data on the transmitter clock without any oversampling.

Figure 25-11. Example of USART in synchronous mode

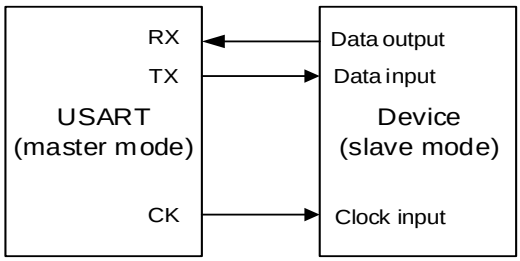

Figure 25-12. 8-bit format USART synchronous waveform (CLEN = 1)

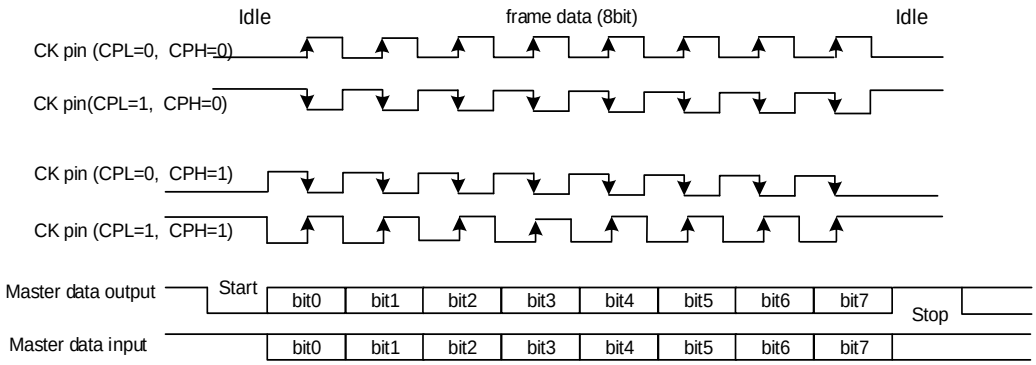

25.3.10. IrDA SIR ENDEC mode

The IrDA mode is enabled by setting the IREN bit in USART_CTL2. The LMEN, STB[1:0], CKEN bits in USART_CTL1 and HDEN, SCEN bits in USART_CTL2 should be cleared in IrDA mode.

In IrDA mode, the USART transmission data frame is modulated in the SIR transmit encoder and transmitted to the infrared LED through the TX pin. The SIR receive decoder receives the modulated signal from the infrared LED through the RX pin, and puts the demodulated data frame to the USART receiver. The baud rate should not be larger than 115200 for the encoder.

Figure 25-13. IrDA SIR ENDEC module

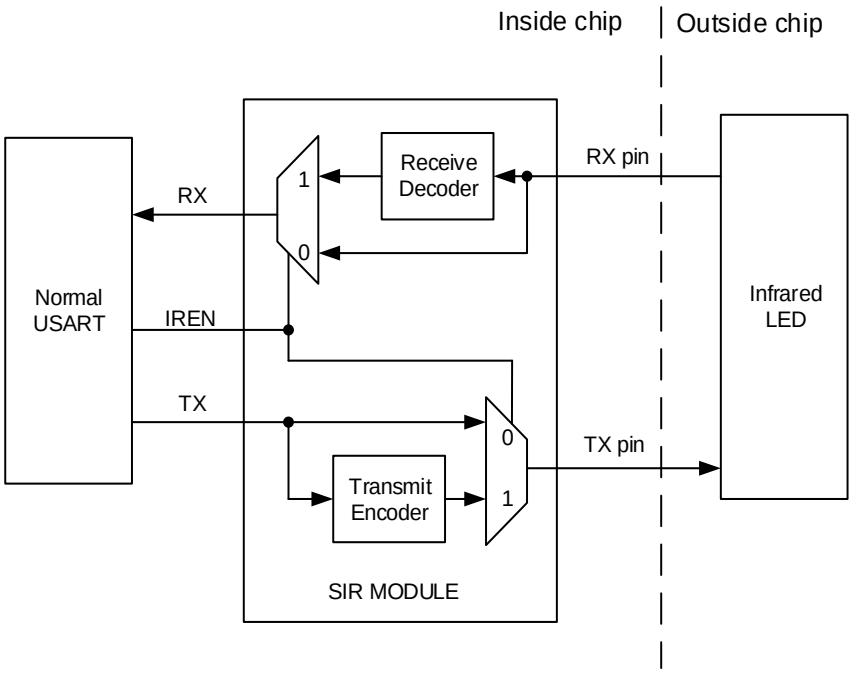

In IrDA mode, the polarity of the TX and RX pins is different. The TX pin is usually at low state, while the RX pin is usually at high state. The IrDA pins keep stable to represent the logic ‘1’, while an infrared light pulse on the IrDA pins (a Return to Zero signal) represents the logic ‘0’. The pulse width should be 3 / 16 of a bit period. The IrDA could not detect any pulse if the pulse width is less than 1 PSC clock. While it can detect a pulse by chance if the pulse width is greater than 1 but smaller than 2 times of PSC clock.

Because the IrDA is a half-duplex protocol, the transmission and the reception should not be carried out at the same time in the IrDA SIR ENDEC block.

Figure 25-14. IrDA data modulation

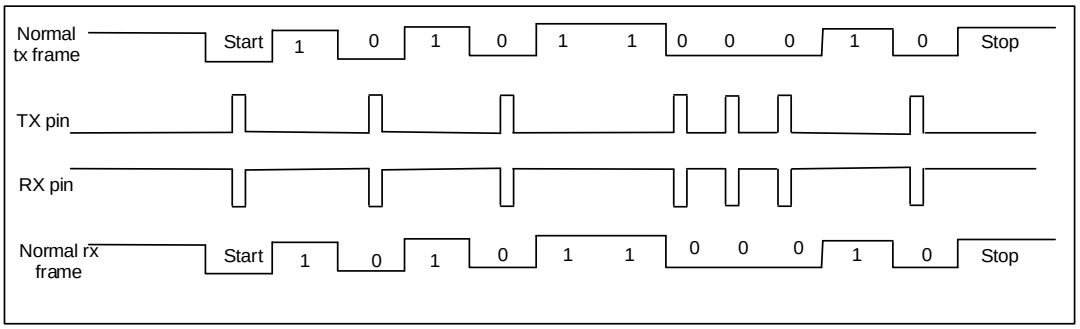

The SIR sub module can work in low power mode by setting the IRLP bit in USART_CTL2. The transmit encoder is driven by a low speed clock, which is divided from the PCLK. The division ratio is configured by the PSC[7:0] bits in USART_GP register. The pulse width on the TX pin is 3 cycles of this low speed period. The receiver decoder works in the same manner as the normal IrDA mode.

25.3.11. Half-duplex communication mode

The half-duplex communication mode is enabled by setting the HDEN bit in USART_CTL2. The LMEN, CKEN bits in USART_CTL1 and SCEN, IREN bits in USART_CTL2 should be cleared in half-duplex communication mode.

Only one wire is used in half-duplex mode. The TX and RX pins are connected together internally. The TX pin should be configured as IO pin. The conflicts should be controlled by the software. When the TEN bit is set, the data in the data register will be sent.

25.3.12. Smartcard (ISO7816-3) mode

The smartcard mode is an asynchronous mode, which is designed to support the ISO7816-3 protocol. Both the character (T = 0) mode and the block (T = 1) mode are supported. The smartcard mode is enabled by setting the SCEN bit in USART_CTL2. The LMEN bit in USART_CTL1 and HDEN, IREN bits in USART_CTL2 should be reset in smartcard mode.

A clock is provided to the smartcard if the CKEN bit is set. The clock can be divided for other use.

The frame consists of 1 start bit, 9 data bits (1 parity bit included) and 1.5 stop bits.

The smartcard mode is a half-duplex communication protocol. When connected to a smartcard, the TX pin must be configured as open drain mode, and drives a bidirectional line that is also driven by the smartcard.

Figure 25-15. ISO7816-3 frame format

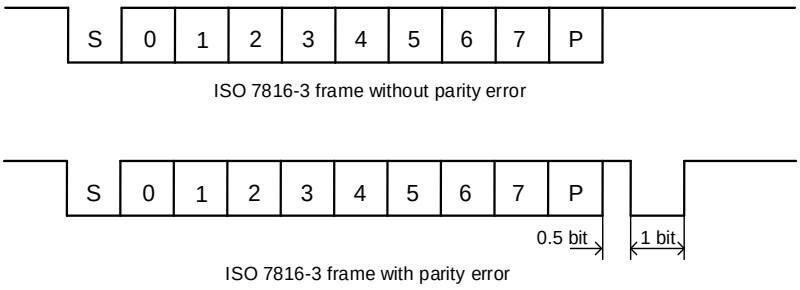

Character (T = 0) mode

Compared to the timing in normal operation, the transmission time from transmit shift register to the TX pin is delayed by half baud clock, and the TC flag assertion time is delayed by a guard time that is configured by the GUAT[7:0] bits in USART_GP. In Smartcard mode, the internal guard time counter starts counting up after the stop bits of the last data frame, and the GUAT[7:0] bits should be configured as the character guard time (CGT) in ISO7816-3 protocol minus 12. The TC status is forced reset while the guard time counter is counting up. When the counter reaches the programmed value TC is asserted high.

During USART transmission, if a parity error event is detected, the smartcard may NACK the current frame by pulling down the TX pin during the last 1 bit time of the stop bits. The USART

can automatically resend data according to the protocol for SCRTNUM times. An interframe gap of 2.5 bits time will be inserted before the start of a resented frame. At the end of the last repeated character the TC bit is set immediately without guard time. The USART will stop transmitting and assert the frame error status if it still receives the NACK signal after the programmed number of retries. The USART will not take the NACK signal as the start bit.

During USART reception, if the parity error is detected in the current frame, the TX pin is pulled low during the last 1 bit time of the stop bits. This signal is the NACK signal to smartcard. Then a frame error occurs in smartcard side. The RBNE / receive DMA request is not activated if the received character is erroneous. According to the protocol, the smartcard can resend the data. The USART stops transmitting the NACK and the error is regarded as a parity error if the received character is still erroneous after the maximum number of retries which is specified in the SCRTNUM bit field. The NACK signal is enabled by setting the NKEN bit in USART_CTL2.

The idle frame and break frame are not supported in the Smartcard mode.

Block (T = 1) mode

In block (T = 1) mode, the NKEN bit in the USART_CTL2 register should be cleared to deactivate the NACK transmission.

When requesting a read from the smartcard, the RT[23:0] bits in USART_RT register should be programmed with the BWT (block wait time) - 11 value and RBNEIE must be set. A timeout interrupt will be generated, if no answer is received from the card before the expiration of this period. If the first character is received before the expiration of the period, it is signaled by the RBNE interrupt. If DMA is used to read from the smartcard in block mode, the DMA must be enabled only after the first character is received.

In order to allow the automatic check of the maximum wait time between two consecutive characters, the USART_RT register must be programmed to the CWT (character wait time) - 11 value, which is expressed in baudtime units, after the reception of the first character (RBNE interrupt). The USART signals to the software through the RT flag and interrupt (when RTIE bit is set), if the smartcard doesn't send a new character in less than the CWT period after the end of the previous character.

The USART uses a block length counter, which is reset when the USART is transmitting (TBE = 0), to count the number of received characters. The length of the block, which must be programmed in the BL[7:0] bits in the USART_RT register, is received from the smartcard in the third byte of the block (prologue field). This register field must be programmed to the minimum value (0x0), before the start of the block, when using DMA mode. With this value, an interrupt is generated after the 4th received character. The software must read the third byte as block length from the receive buffer.

In interrupt driven receive mode, the length of the block may be checked by software or by programming the BL value. However, before the start of the block, the maximum value of BL (0xFF) may be programmed. The real value will be programmed after the reception of the

third character.

The total block length (including prologue, epilogue and information fields) equals BL+4. The end of the block is signaled to the software through the EBF flag and interrupt (when EBIE bit is set). The RT interrupt may occur in case of an error in the block length.

Direct and inverse convention

The smartcard protocol defines two conventions: direct and inverse.

The direct convention is defined as: LSB first, logical bit value of 1 corresponds to H state of the line and parity is even. In this case, the following control bits must be programmed: MSBF = 0, DINV = 0.

The inverse convention is defined as: MSB first, logical bit value 1 corresponds to an L state on the signal line and parity is even. In this case, the following control bits must be programmed: MSBF = 1, DINV = 1.

25.3.13. ModBus communication

The USART offers basic support for the implementation of ModBus/RTU and ModBus/ASCII protocols by implementing an end of block detection.

In the ModBus/RTU mode, the end of one block is recognized by an idle line for more than 2 characters time. This function is implemented through the programmable timeout function.

To detect the idle line, the RTEN bit in the USART_CTL1 register and the RTIE in the USART_CTL0 register must be set. The USART_RT register must be set to the value corresponding to a timeout of 2 characters time. After the last stop bit is received, when the receive line is idle for this duration, an interrupt will be generated, informing the software that the current block reception is completed.

In the ModBus / ASCII mode, the end of a block is recognized by a specific (CR / LF) character sequence. The USART manages this mechanism using the character match function by programming the LF ASCII code in the ADDR0 or ADDR1 field and activating the address match interrupt (AMIE0 = 1 or AMIE1 = 1). When a LF has been received or can check the CR / LF in the DMA buffer, the software will be informed.

25.3.14. Receive / Transmitter FIFO

Receive FIFO

The receive FIFO can be enabled by setting the FEN bit of the USART_FCS register to avoid the overrun error when the CPU can’t serve the RBNE interrupt immediately. Up to 17 frames receive data can be stored in the receive FIFO and receive buffer. The RFF flag will be set when the receive FIFO is full, an interrupt is generated if the RFFIE bit is set.The RFT flag will be set when the receive FIFO reaches the threshold configured in the RFTCFG[2:0] bits.,

an interrupt is generated if the RFTIE bit is set. An interrupt will be generated when receive FIFO is not empty if RFNEIE bit is set.

Figure 25-16. USART receive FIFO structure

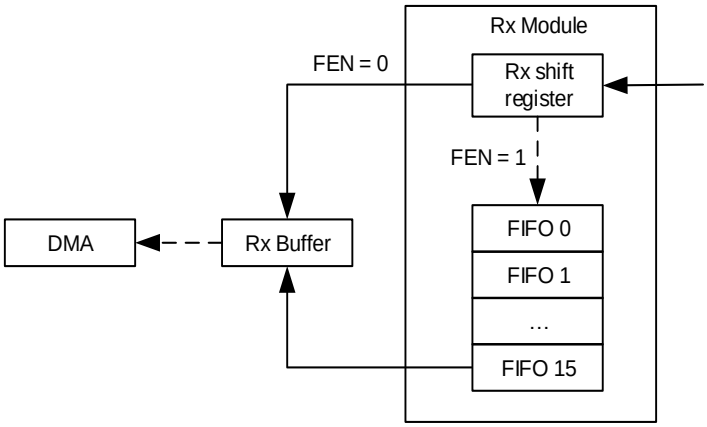

If the software read receive data buffer in the routing of the RBNE interrupt, the RBNEIE bit should be reset at the beginning of the routing and set after all of the receive data is read out. The PERR / NERR / FERR / EBF flags should be cleared before reading a receive data out.

Transmit FIFO

The Transmitter FIFO can be enabled by setting the FEN bit of the USART_FCS register Up to 16 frames transmitter data can be stored in the transmitter FIFO and transmitter buffer. The TFE flag will be set when the transmitter FIFO is empty, an interrupt is generated if the TFEIE bit is set.The TFT flag will be set when the transmitter FIFO reaches the threshold configured in the TFTCFG[2:0] bits., an interrupt is generated if the TFTIE bit is set. TFNF flag will be set when transmitter FIFO is not full, an interrupt will be generated if TFNFIE bit is set.

Figure 25-17. USART transmitter FIFO structure

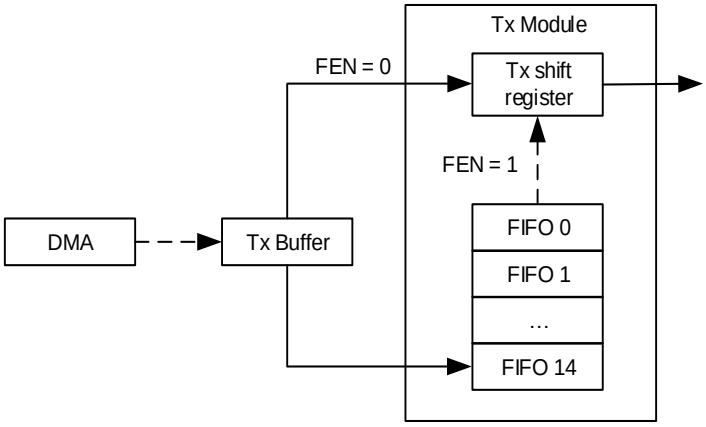

25.3.15. Wakeup from deep-sleep mode

The USART is able to wake up the MCU from deep-sleep mode by the standard RBNE interrupt or the WUM interrupt.

The UESM bit must be set and the USART clock must be set to CK_IRC64MDIV or CK_LXTAL (refer to the reset and clock unit RCU section).

When using the standard RBNE interrupt, the RBNEIE bit must be set before entering deep-sleep mode.

When using the WUIE interrupt, the source of WUIE interrupt may be selected through the WUM bit fields.

DMA must be disabled before entering deep-sleep mode. Before entering Deep-sleep mode, software must check that the USART is not performing a transfer, by checking the BSY flag in the USART_STAT register. The REA bit must be checked to ensure the USART is actually enabled.

When the wakeup event is detected, the WUF flag is set by hardware and a wakeup interrupt is generated if the WUIE bit is set, independently of whether the MCU is in deep-Sleep or normal mode.

Note: AMEN0 or AMEN1 must be set when using address match method to wakeup MCU from Deep-Sleep mode.

25.3.16. USART interrupts

The USART interrupt events and flags are listed in ***Table 25-3. USART interrupt requests***.

Table 25-3. USART interrupt requests

Interrupt event	Event flag	Enable Control bit
Transmit data register empty or Transmit FIFO not full	TBE / TFNF	TBEIE / TFNFIE
CTS flag	CTSF	CTSIE
Transmission complete	TC	TCIE
Received data ready to be read or Receive FIFO not empty	RBNE/ RFNE	RBNEIE / RFNEIE
Overrun error detected	ORERR	
Receive FIFO full	RFFIF	RFFIE
Receive FIFO threshold reaches	RFT	RFTIE
Transmit FIFO empty	TFE	TFEIE
Transmit FIFO threshold reaches	TFT	TFTIE
Idle line detected	IDLEF	IDLEIE
Parity error flag	PERR	PERRIE
Break detected flag in LIN mode	LBDF	LBDIE
Reception errors (noise flag,	NERR or ORERR or FERR	ERRIE

Interrupt event	Event flag	Enable Control bit
overrun error, framing error)		
ADDR0 match	AMF0	AMIE0
ADDR1 match	AMF1	AMIE1
Receiver timeout error	RTF	RTIE
End of Block	EBF	EBIE
Wakeup from Deep-sleep mode	WUF	WUIE

All of the interrupt events are ORed together before being sent to the interrupt controller, so the USART can only generate a single interrupt request to the controller at any given time. Software can service multiple interrupt events in a single interrupt service routine.

Figure 25-18. USART interrupt mapping diagram

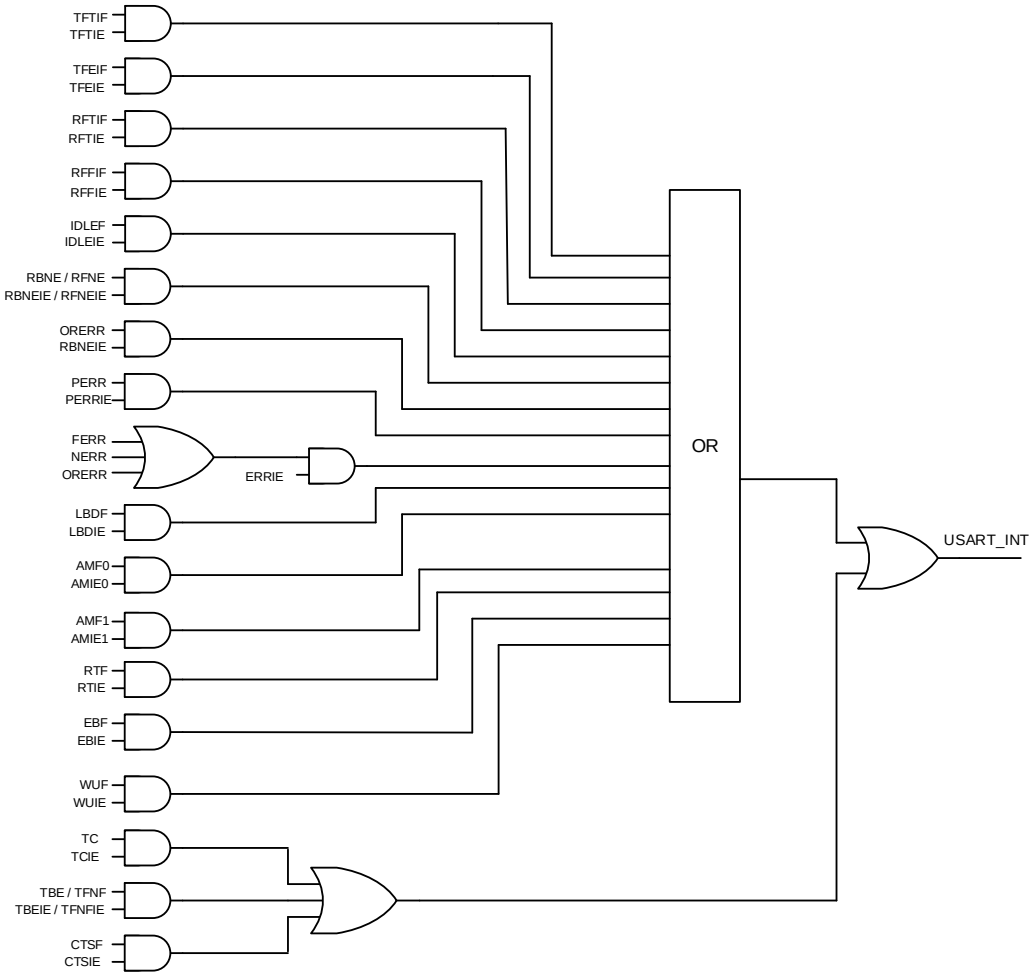

25.4. Register definition

USART0 base address: 0x4001 1000

USART1 base address: 0x4000 4400

USART2 base address: 0x4000 4800

UART3 base address: 0x4000 4C00

UART4 base address: 0x4000 5000

USART5 base address: 0x4001 1400

UART6 base address: 0x4000 7800

UART7 base address: 0x4000 7C00

25.4.1. Control register 0 (USART_CTL0)

Address offset: 0x00
Reset value: 0x0000 0000

This register has to be accessed by word (32-bit).

31	30	29	28	27	26	25	24	23	22	21	20	19	18	17	16
AMIE1	Reserved		WL1	EBIE	RTIE	DEA[4:0]					DED[4:0]				
rw			rw	rw	rw			rw					rw		

15	14	13	12	11	10	9	8	7	6	5	4	3	2	1	0
OVSMOD	AMIE0	MEN	WL0	WM	PCEN	PM	PERRIE	TBEIE / TFNFIE	TCIE	RBNEIE / RFNEIE	IDLEIE	TEN	REN	UESM	UEN
rw	rw	rw	rw	rw	rw	rw	rw	rw	rw	rw	rw	rw	rw	rw	rw

Bits	Fields	Descriptions
31	AMIE1	ADDR1 character match interrupt enable 0: ADDR1 character match interrupt is disabled 1: ADDR1 character match interrupt is enabled
30:29	Reserved	Must be kept at reset value.
28	WL1	Word length 1 This bit and WL0 bit determine the word length 00: 8 Data bits 01: 9 Data bits 10: 7 Data bits 11: 10 Data bits This bit field cannot be written when the USART is enabled (UEN = 1).
27	EBIE	End of block interrupt enable

		0: End of block interrupt is disabled 1: End of block interrupt is enabled This bit is reserved in UART3 / UART4 / UART6 / UART7.
26	RTIE	Receiver timeout interrupt enable 0: Receiver timeout interrupt is disabled 1: Receiver timeout interrupt is enabled This bit is reserved in UART3 / UART4 / UART6 / UART7.
25:21	DEA[4:0]	Driver enable assertion time These bits are used to define the time between the activation of the DE (driver enable) signal and the beginning of the start bit. It is expressed in sample time units (1/8 or 1/16 bit time), which are configured by the OVSMOD bit. This bit field cannot be written when the USART is enabled (UEN = 1).
20:16	DED[4:0]	Driver enable de-assertion time These bits are used to define the time between the end of the last stop bit, in a transmitted message, and the de-activation of the DE (driver enable) signal. It is expressed in sample time units (1/8 or 1/16 bit time), which are configured by the OVSMOD bit. This bit field cannot be written when the USART is enabled (UEN = 1).
15	OVSMOD	Oversample mode 0: Oversampling by 16 1: Oversampling by 8 This bit must be kept cleared in LIN, IrDA and smartcard modes. This bit field cannot be written when the USART is enabled (UEN = 1).
14	AMIE0	ADDR0 character match interrupt enable 0: ADDR0 character match interrupt is disabled 1: ADDR0 character match interrupt is enabled
13	MEN	Mute mode enable 0: Mute mode disabled 1: Mute mode enabled
12	WL0	Word length This bit and WL1 bit determine the word length This bit field cannot be written when the USART is enabled (UEN = 1).
11	WM	Wakeup method in mute mode 0: Idle Line 1: Address match This bit field cannot be written when the USART is enabled (UEN = 1).
10	PCEN	Parity control enable 0: Parity control disabled 1: Parity control enabled

		This bit field cannot be written when the USART is enabled (UEN = 1).
9	PM	Parity mode 0: Even parity 1: Odd parity This bit field cannot be written when the USART is enabled (UEN = 1).
8	PERRIE	Parity error interrupt enable 0: Parity error interrupt is disabled 1: An interrupt will occur whenever the PERR bit is set in USART_STAT
7	TBEIE	When FIFO is disabled: Transmitter register empty interrupt enable 0: Interrupt is inhibited 1: An interrupt will occur whenever the TBE bit is set in USART_STAT
	TFNFIE	When FIFO is enabled: Transmit FIFO not full interrupt enable 0: Transmit FIFO not full interrupt is disabled 1: An interrupt will occur whenever the TFNF bit is set in USART_STAT
6	TCIE	Transmission complete interrupt enable If this bit is set, an interrupt occurs when the TC bit in USART_STAT is set. 0: Transmission complete interrupt is disabled 1: Transmission complete interrupt is enabled
5	RBNEIE	When FIFO is disabled: Read data buffer not empty interrupt and overrun error interrupt enable 0: Read data register not empty interrupt and overrun error interrupt disabled 1: An interrupt will occur whenever the ORERR bit is set or the RBNE bit is set in USART_STAT.
	RFNEIE	When FIFO is enabled: Receive FIFO not empty interrupt and overrun error interrupt enable 0: Receive FIFO not empty interrupt and overrun error interrupt is disabled 1: An interrupt will occur whenever the ORERR bit is set or the RFNE bit is set in USART_STAT.
4	IDLEIE	IDLE line detected interrupt enable 0: IDLE line detected interrupt disabled 1: An interrupt will occur whenever the IDLEF bit is set in USART_STAT.
3	TEN	Transmitter enable 0: Transmitter is disabled 1: Transmitter is enabled
2	REN	Receiver enable 0: Receiver is disabled

		1: Receiver is enabled and begins searching for a start bit
1	UESM	USART enable in Deep-sleep mode 0: USART not able to wake up the MCU from Deep-sleep mode. 1: USART able to wake up the MCU from Deep-sleep mode. Providing that the clock source for the USART must be CK_IRC64MDIV or CK_LXTAL. This bit is reserved in UART3 / UART4 / UART6 / UART7.
0	UEN	USART enable 0: USART prescaler and outputs disabled 1: USART prescaler and outputs enabled

25.4.2. Control register 1 (USART_CTL1)

Address offset: 0x04

Reset value: 0x0000 0000

This register has to be accessed by word (32-bit).

31	30	29	28	27	26	25	24	23	22	21	20	19	18	17	16
ADDR0[7:0]								RTEN	Reserved			MSBF	DINV	TINV	RINV
rw								rw				rw	rw	rw	rw

15	14	13	12	11	10	9	8	7	6	5	4	3	2	1	0
STRP	LMEN	STB[1:0]		CKEN	CPL	CPH	CLEN	Reserved	LBDIE	LBLEN	ADDM0	Reserved			AMEN0
rw	rw	rw		rw	rw	rw	rw		rw	rw	rw				rw

Bits	Fields	Descriptions
31:24	ADDR0[7:0]	Address 0 of the USART terminal These bits give the address 0 of the USART terminal. In multiprocessor communication during mute mode or deep-sleep mode, this is used for wakeup with address match detection. The received frame, the MSB of which is equal to 1, will be compared to these bits. When the ADDM0 bit is reset, only the ADDR0[3:0] bits are used to compare. In normal reception, these bits are also used for character detection. The whole received character (8-bit) is compared to the ADDR0[7:0] value and AMF0 flag is set on matching. This bit field cannot be written when both reception (REN = 1) and USART (UEN = 1) are enabled.
23	RTEN	Receiver timeout enable 0: Receiver timeout function disabled 1: Receiver timeout function enabled This bit is reserved in UART3 / UART4 / UART6 / UART7.
22:20	Reserved	Must be kept at reset value.
19	MSBF	Most significant bit first

		0: Data is transmitted / received with the LSB first 1: Data is transmitted / received with the MSB first This bit field cannot be written when the USART is enabled (UEN = 1).
18	DINV	Data bit level inversion 0: Data bit signal values are not inverted 1: Data bit signal values are inverted This bit field cannot be written when the USART is enabled (UEN = 1).
17	TINV	TX pin level inversion 0: TX pin signal values are not inverted 1: TX pin signal values are inverted This bit field cannot be written when the USART is enabled (UEN = 1).
16	RINV	RX pin level inversion 0: RX pin signal values are not inverted 1: RX pin signal values are inverted This bit field cannot be written when the USART is enabled (UEN = 1).
15	STRP	Swap TX / RX pins 0: The TX and RX pins functions are not swapped 1: The TX and RX pins functions are swapped This bit field cannot be written when the USART is enabled (UEN = 1).
14	LMEN	LIN mode enable 0: LIN mode disabled 1: LIN mode enabled This bit field cannot be written when the USART is enabled (UEN = 1). This bit is reserved in UART3 / UART4 / UART6 / UART7.
13:12	STB[1:0]	STOP bits length 00: 1 Stop bit 01: 0.5 Stop bit 10: 2 Stop bits 11: 1.5 Stop bit This bit field cannot be written when the USART is enabled (UEN = 1). **Note:** 0.5 and 1.5 stop bit are not used in UART3 / UART4 / UART6 / UART7.
11	CKEN	CK pin enable 0: CK pin disabled 1: CK pin enabled This bit field cannot be written when the USART is enabled (UEN = 1). This bit is reserved in UART3 / UART4 / UART6 / UART7.
10	CPL	Clock polarity 0: Steady low value on CK pin outside transmission window in synchronous mode 1: Steady high value on CK pin outside transmission window in synchronous mode

		This bit field cannot be written when the USART is enabled (UEN = 1).
9	CPH	Clock phase 0: The first clock transition is the first data capture edge in synchronous mode 1: The second clock transition is the first data capture edge in synchronous mode This bit field cannot be written when the USART is enabled (UEN = 1).
8	CLEN	CK length 0: The clock pulse of the last data bit (MSB) is not output to the CK pin in synchronous mode 1: The clock pulse of the last data bit (MSB) is output to the CK pin in synchronous mode This bit field cannot be written when the USART is enabled (UEN = 1)
7	Reserved	Must be kept at reset value.
6	LBDIE	LIN break detection interrupt enable 0: LIN break detection interrupt is disabled 1: An interrupt will occur whenever the LBDF bit is set in USART_STAT This bit is reserved in UART3 / UART4 / UART6 / UART7.
5	LBLEN	LIN break frame length 0: 10 bit break detection 1: 11 bit break detection This bit field cannot be written when the USART is enabled (UEN = 1). This bit is reserved in UART3 / UART4 / UART6 / UART7.
4	ADDM0	Address 0 detection mode This bit is used to select between 4-bit address detection and full-bit address 0 detection. 0: 4-bit address detection 1: Full-bit address detection. In 7-bit, 8-bit and 9-bit data modes, the address detection is done on 6-bit, 7-bit and 8-bit address (ADDR0[5:0], ADDR0[6:0] and ADDR0[7:0]) respectively This bit field cannot be written when the USART is enabled (UEN = 1).
3:1	Reserved	Must be kept at reset value.
0	AMEN0	Address 0 match mode enable 0: Address 0 match mode disable 1: Address 0 match mode enable.

25.4.3. Control register 2 (USART_CTL2)

Address offset: 0x08
Reset value: 0x0000 0000

This register has to be accessed by word (32-bit).

31	30	29	28	27	26	25	24	23	22	21	20	19	18	17	16
ADDR1[7:0]								ADDM1	WUIE	WUM[1:0]		SCRTNUM[2:0]			AMEN1
rw								rw	rw	rw		rw			rw

15	14	13	12	11	10	9	8	7	6	5	4	3	2	1	0
DEP	DEM	DDRE	OVRD	OSB	CTSIE	CTSEN	RTSEN	DENT	DENR	SCEN	NKEN	HDEN	IRLP	IREN	ERRIE
rw	rw	rw	rw	rw	rw	rw	rw	rw	rw	rw	rw	rw	rw	rw	rw

Bits	Fields	Descriptions
31:24	ADDR1[7:0]	Address 1 of the USART terminal These bits give the address 1 of the USART terminal. In multiprocessor communication during mute mode or Deep-sleep mode, this is used for wakeup with address mark detection. The received frame, the MSB of which is equal to 1, will be compared to these bits. When the ADDM1 bit is reset, only the ADDR1 [3:0] bits are used to compare. In normal reception, these bits are also used for character detection. The whole received character (8-bit) is compared to the ADDR1[7:0] value and AMF1 flag is set on matching. This bit field cannot be written when both reception (REN = 1) and USART are enabled (UEN = 1).
23	ADDM1	Address 1 detection mode This bit is used to select between 4-bit address detection and full-bit address 1 detection. 0: 4-bit address detection 1: Full-bit address detection. In 7-bit, 8-bit and 9-bit data modes, the address detection is done on 6-bit, 7-bit and 8-bit address (ADDR1[5:0], ADDR1[6:0] and ADDR1[7:0]) respectively. This bit field cannot be written when the USART is enabled (UEN = 1).
22	WUIE	Wakeup from deep-sleep mode interrupt enable 0: Wakeup from deep-sleep mode interrupt is disabled 1: Wakeup from deep-sleep mode interrupt is enabled This bit is reserved in UART3 / UART4 / UART6 / UART7.
21:20	WUM[1:0]	Wakeup mode from deep-sleep mode These bits are used to specify the event which activates the WUF (wakeup from deep-sleep mode flag) in the USART_STAT register. 00: WUF active on address match, which is defined by ADDR0 and ADDM0 or ADDR1 and ADDM1. 01: Reserved 10: WUF active on start bit 11: WUF active on RBNE This bit field cannot be written when the USART is enabled (UEN = 1). This bit is reserved in UART3 / UART4 / UART6 / UART7.

19:17	SCRTNUM[2:0]	Smartcard auto-retry number In smartcard mode, these bits specify the number of retries in transmission and reception. In transmission mode, a transmission error (FERR bit set) will occur after this number of automatic retransmission retries. In reception mode, reception error (RBNE and PERR bits set) will occur after this number or erroneous reception trials. When these bits are configured as 0x0, there will be no automatic retransmission in transmit mode. This bit field is only can be cleared to 0 when the USART is enabled (UEN = 1), to stop retransmission. This bit is reserved in UART3 / UART4 / UART6 / UART7.
16	AMEN1	Address 1 match mode enable 0: Address 1 match mode disable 1: Address 1 match mode enable
15	DEP	Driver enable polarity mode 0: DE signal is active high 1: DE signal is active low This bit field cannot be written when the USART is enabled (UEN = 1)
14	DEM	Driver enable mode This bit is used to activate the external transceiver control, through the DE signal, which is output on the RTS pin. 0: DE function is disabled 1: DE function is enabled This bit field cannot be written when the USART is enabled (UEN = 1).
13	DDRE	Mask DMA request on reception error. 0: DMA is not disabled in case of reception error. The DMA request is not asserted to make sure the erroneous data is not transferred, but the next correct received data will be transferred. The RBNE is kept 0 to prevent overrun when reception error, but the corresponding error flag is set. This mode can be used in smartcard mode 1: The DMA request is not asserted in case of reception error until the error flag is cleared. The RBNE flag and corresponding error flag will be set. The software must first disable the DMA request (DENR = 0) or clear RBNE / RFNE in USART_STAT when FIFO mode is enabled before clearing the error flag This bit field cannot be written when the USART is enabled (UEN = 1).
12	OVRD	Overrun disable 0: Overrun functionality is enabled. The ORERR error flag will be set when received data is not read before receiving new data, and the new data will be lost 1: Overrun functionality is disabled. The ORERR error flag will not be set when received data is not read before receiving new data, and the new received data

		overwrites the previous content of the USART_RDATA register. When FIFO mode is enabled, the data is written in USART_RDATA directly and Receive FIFO is bypassed. Even if FIFO is enabled, the RBNE bit is to be used. This bit field cannot be written when the USART is enabled (UEN = 1).
11	OSB	One sample bit method 0: Three sample bit method 1: One sample bit method This bit field cannot be written when the USART is enabled (UEN = 1).
10	CTSIE	CTS interrupt enable 0: CTS interrupt is disabled 1: An interrupt will occur whenever the CTS bit is set in USART_STAT
9	CTSEN	CTS enable 0: CTS hardware flow control disabled 1: CTS hardware flow control enabled This bit field cannot be written when the USART is enabled (UEN = 1).
8	RTSEN	RTS enable 0: RTS hardware flow control disabled 1: RTS hardware flow control enabled, data can be requested only when there is space in the receive buffer This bit field cannot be written when the USART is enabled (UEN = 1).
7	DENT	DMA enable for transmission 0: DMA mode is disabled for transmission 1: DMA mode is enabled for transmission
6	DENR	DMA enable for reception 0: DMA mode is disabled for reception 1: DMA mode is enabled for reception
5	SCEN	Smartcard mode enable 0: Smartcard mode disabled 1: Smartcard mode enabled This bit field cannot be written when the USART is enabled (UEN = 1). This bit is reserved in UART3 / UART4 / UART6 / UART7.
4	NKEN	NACK enable in Smartcard mode 0: Disable NACK transmission when parity error 1: Enable NACK transmission when parity error This bit field cannot be written when the USART is enabled (UEN = 1). This bit is reserved in UART3 / UART4 / UART6 / UART7.
3	HDEN	Half-duplex enable 0: Half duplex mode is disabled 1: Half duplex mode is enabled

		This bit field cannot be written when the USART is enabled (UEN = 1).
2	IRLP	IrDA low-power 0: Normal mode 1: Low-power mode This bit field cannot be written when the USART is enabled (UEN = 1).
1	IREN	IrDA mode enable 0: IrDA disabled 1: IrDA enabled This bit field cannot be written when the USART is enabled (UEN = 1). This bit is reserved in UART3 / UART4 / UART6 / UART7.
0	ERRIE	Error interrupt enable 0: Error interrupt disabled 1: An interrupt will occur whenever the FERR bit or the ORERR bit or the NERR bit is set in USART_STAT in multibuffer communication

25.4.4. Baud rate generator register (USART_BAUD)

Address offset: 0x0C
Reset value: 0x0000 0000

This register cannot be written when the USART is enabled (UEN=1).

This register has to be accessed by word (32-bit).

31	30	29	28	27	26	25	24	23	22	21	20	19	18	17	16
Reserved															

15	14	13	12	11	10	9	8	7	6	5	4	3	2	1	0
BRR [15:4]												BRR[3:0]			
rw												rw			

Bits	Fields	Descriptions
31:16	Reserved	Must be kept at reset value.
15:4	BRR[15:4]	Integer of baud-rate divider INTDIV = BRR[15:4]
3:0	BRR [3:0]	Fraction of baud-rate divider If OVSMOD = 0, FRADIV = BRR [3:0]; If OVSMOD = 1, FRADIV = BRR [2:0], BRR [3] must be reset.

25.4.5. Prescaler and guard time configuration register (USART_GP)

Address offset: 0x10

Reset value: 0x0000 0000

This register cannot be written when the USART is enabled (UEN = 1).

This register is reserved in UART3 / UART4 / UART6 / UART7.

This register has to be accessed by word (32-bit).

31	30	29	28	27	26	25	24	23	22	21	20	19	18	17	16
Reserved															

15	14	13	12	11	10	9	8	7	6	5	4	3	2	1	0
GUAT[7:0]								PSC[7:0]							
rw								rw							

Bits	Fields	Descriptions
31:16	Reserved	Must be kept at reset value
15:8	GUAT[7:0]	Guard time value in smartcard mode This bit field cannot be written when the USART is enabled (UEN=1).
7:0	PSC[7:0]	Prescaler value for dividing the system clock In IrDA Low-power mode, the division factor is the prescaler value. 00000000: Reserved - do not program this value 00000001: divides the source clock by 1 00000010: divides the source clock by 2 ... In IrDA normal mode, 00000001: can be set this value only In smartcard mode, the prescaler value for dividing the system clock is stored in PSC[4:0] bits. And the bits of PSC[7:5] must be kept at reset value. The division factor is twice as the prescaler value. 00000: Reserved - do not program this value 00001: divides the source clock by 2 00010: divides the source clock by 4 00011: divides the source clock by 6 ... This bit field cannot be written when the USART is enabled (UEN=1).

25.4.6. Receiver timeout register (USART_RT)

Address offset: 0x14
Reset value: 0x0000 0000

This bit is reserved in UART3 / UART4 / UART6 / UART7.

This register has to be accessed by word (32-bit).

31	30	29	28	27	26	25	24	23	22	21	20	19	18	17	16
BL[7:0]								RT[23:16]							
rw								rw							

15	14	13	12	11	10	9	8	7	6	5	4	3	2	1	0
RT[15:0]															
rw															

Bits	Fields	Descriptions
31:24	BL[7:0]	Block Length These bits specify the block length in smartcard T=1 reception. Its value equals the number of information characters + the length of the Epilogue Field (1-LEC / 2-CRC) - 1. This value, which must be programmed only once per received block, can be programmed after the start of the block reception (using the data from the LEN character in the Prologue Field). The block length counter is reset when TBE = 0 or TFE = 0 (FIFO is enabled) in smartcard mode. In other modes, when REN = 0 (receiver disabled) and/or when the EBC bit is written to 1, the block length counter is reset.
23:0	RT[23:0]	Receiver timeout threshold These bits are used to specify receiver timeout value in terms of number of baud clocks. In standard mode, the RTF flag is set if no new start bit is detected for more than the RT value after the last received character. In smartcard mode, the CWT and BWT are implemented by this value. In this case, the timeout measurement is started from the start bit of the last received character. These bits can be written on the fly. The RTF flag will be set if the new value is lower than or equal to the counter. These bits must only be programmed once per received character.

25.4.7. Command register (USART_CMD)

Address offset: 0x18

Reset value: 0x0000 0000

This register has to be accessed by word (32-bit).

31	30	29	28	27	26	25	24	23	22	21	20	19	18	17	16
Reserved															

15	14	13	12	11	10	9	8	7	6	5	4	3	2	1	0
Reserved											TXFCMD	RXFCMD	MMCMD	SBKCMD	Reserved
											w	w	w	w	

Bits	Fields	Descriptions

31:5	Reserved	Must be kept at reset value.
4	TXFCMD	Transmit data flush request When FIFO is disabled, Writing 1 to this bit sets the TBE flag, to discard the transmit data. When FIFO is enabled, Writing 1 to this bit flushes the whole Transmit FIFO and sets TFE flag in USART_FCS. Note:When FIFO is enabled, druing the flush command,TFNF is reset until Transmit FIFO is empty.
3	RXFCMD	Receive data flush command When FIFO is disabled, Writing 1 to this bit clears the RBNE flag to discard the received data without reading it. When FIFO is enabled, Writing 1 to this bit empties the Receive FIFO and sets RFNE flag in USART_FCS.
2	MMCMD	Mute mode command Writing 1 to this bit makes the USART into mute mode and sets the RWU flag.
1	SBKCMD	Send break command Writing 1 to this bit sets the SBF flag and makes the USART send a BREAK frame, as soon as the transmit machine is idle.
0	Reserved	Must be kept at reset value.

25.4.8. Status register (USART_STAT)

Address offset: 0x1C

Reset value: 0x0000 00C0

This register has to be accessed by word (32-bit).

31	30	29	28	27	26	25	24	23	22	21	20	19	18	17	16
Reserved									REA	TEA	WUF	RWU	SBF	AMF0	BSY
									r	r	r	r	r	r	r

15	14	13	12	11	10	9	8	7	6	5	4	3	2	1	0
Reserved		AMF1	EBF	RTF	CTS	CTSF	LBDF	TBE / TFNF	TC	RBNE / RFNE	IDLEF	ORERR	NERR	FERR	PERR
		r	r	r	r	r	r	r	r	r	r	r	r	r	r

Bits	Fields	Descriptions
31:23	Reserved	Must be kept at reset value.
22	REA	Receive enable acknowledge flag This bit, which is set / reset by hardware, reflects the receive enable state of the USART core logic. 0: The USART core receiving logic has not been enabled

		1: The USART core receiving logic has been enabled
21	TEA	Transmit enable acknowledge flag This bit, which is set / reset by hardware, reflects the transmit enable state of the USART core logic. 0: The USART core transmitting logic has not been enabled 1: The USART core transmitting logic has been enabled
20	WUF	Wakeup from deep-sleep mode flag 0: No wakeup from deep-sleep mode 1: Wakeup from deep-sleep mode. An interrupt is generated if WUFIE = 1 in the USART_CTL2 register and the MCU is in Deep-sleep mode. This bit is set by hardware when a wakeup event, which is defined by the WUM bit field, is detected. Cleared by writing a 1 to the WUC in the USART_INTC register. This bit can also be cleared when UESM is cleared. This bit is reserved in UART3 / UART4 / UART6 / UART7.
19	RWU	Receiver wakeup from mute mode This bit is used to indicate if the USART is in mute mode. 0: Receiver in active mode 1: Receiver in mute mode It is cleared/set by hardware when a wakeup/mute sequence (address or IDLEIE) is recognized, which is selected by the WM bit in the USART_CTL0 register. This bit can only be set by writing 1 to the MMCMD bit in the USART_CMD register when wakeup on IDLEIE mode is selected.
18	SBF	Send break flag 0: No break character is transmitted 1: Break character will be transmitted This bit indicates that a send break character was requested. Set by software, by writing 1 to the SBKCMD bit in the USART_CMD register. Cleared by hardware during the stop bit of break transmission.
17	AMF0	ADDR0 character match flag 0: ADDR0 character does not match the received character 1: ADDR0 character matches the received character, an interrupt is generated if AMIE0=1 in the USART_CTL0 register. Set by hardware, when the character defined by ADDR0[7:0] is received. Cleared by writing 1 to the AMC in the USART_INTC register.
16	BSY	Busy flag 0: USART reception path is idle 1: USART reception path is working
15:14	Reserved	Must be kept at reset value.
13	AMF1	ADDR1 character match flag

		0: ADDR1 character does not match the received character 1: ADDR1 character matches the received character, an interrupt is generated if AMIE1 = 1 in the USART_CTL0 register. Set by hardware, when the character defined by ADDR1[7:0] is received. Cleared by writing 1 to the AMC in the USART_INTC register.
12	EBF	End of block flag 0: End of Block not reached 1: End of Block (number of characters) reached. An interrupt is generated if the EBIE = 1 in the USART_CTL1 register Set by hardware when the number of received bytes (from the start of the block, including the prologue) is equal or greater than BLEN + 4. Cleared by writing 1 to EBC bit in USART_INTC register. This bit is reserved in UART3 / UART4 / UART6 / UART7.
11	RTF	Receiver timeout flag 0: Timeout value not reached 1: Timeout value reached without any data reception. An interrupt is generated if RTIE bit in the USART_CTL1 register is set. Set by hardware when the RT value, programmed in the USART_RT register has lapsed without any communication. Cleared by writing 1 to RTC bit in USART_INTC register. The timeout corresponds to the CWT or BWT timings in smartcard mode. This bit is reserved in UART3 / UART4 / UART6 / UART7.
10	CTS	CTS level This bit equals to the inverted level of the nCTS input pin. 0: nCTS input pin is in high level 1: nCTS input pin is in low level
9	CTSF	CTS change flag 0: No change occurred on the nCTS status line 1: A change occurred on the nCTS status line. An interrupt will occur if the CTSIE bit is set in USART_CTL2 Set by hardware when the nCTS input toggles. Cleared by writing 1 to CTSC bit in USART_INTC register.
8	LBDF	LIN break detected flag 0: LIN Break is not detected 1: LIN Break is detected. An interrupt will occur if the LBDIE bit is set in USART_CTL1 Set by hardware when the LIN break is detected. Cleared by writing 1 to LBDC bit in USART_INTC register. This bit is reserved in UART3 / UART4 / UART6 / UART7.

7	TBE	When FIFO is disabled: Transmit data register empty 0: Data is not transferred to the shift register 1: Data is transferred to the shift register. An interrupt will occur if the TBEIE bit is set in USART_CTL0 Set by hardware when the content of the USART_TDATA register has been transferred into the transmit shift register or writing 1 to TXFCMD bit of the USART_CMD register. Cleared by a write to the USART_TDATA.
	TFNF	When FIFO is enabled: Transmit FIFO not full 0: Transmit FIFO is full 1: Transmit FIFO is not full. An interrupt will occur if the TFNFIE bit is set in USART_CTL0. Set by hardware when the transmit FIFO is not full. The flag is cleared when the transmit FIFO is full. **Note:**The TFNF bit keep reset during the TXFCMD set until Transmit FIFO is empty.
6	TC	Transmission completed 0: Transmission is not completed 1: Transmission is complete. An interrupt will occur if the TCIE bit is set in USART_CTL0. Set by hardware if the transmission of a frame containing data is completed and if the TBE or TFE bit in USART_FCS is set. Cleared by writing 1 to TCC bit in USART_INTC register. Note: The TC bit is set immediately when TEN is reset and no transmission is on going.
5	RBNE	When FIFO is disabled: Read data buffer not empty 0: Data is not received 1: Data is received and ready to be read. An interrupt will occur if the RBNEIE bit is set in USART_CTL0. Set by hardware when the content of the receive shift register has been transferred to the USART_RDATA. Cleared by reading the USART_RDATA or writing 1 to RXFCMD bit of the USART_CMD register.
	RFNE	When FIFO is enabled: Receive FIFO not empty 0: Receive FIFO is empty 1: Receive FIFO is not empty. An interrupt will occur if the RFNEIE bit is set in USART_CTL0. Set by hardware when the receive FIFO is not empty. The flag is cleared when the receive FIFO is empty. The bit can also be reset by setting RXFCMD bit in

		USART_CMD.
4	IDLEF	IDLE line detected flag 0: No Idle line is detected 1: Idle line is detected. An interrupt will occur if the IDLEIE bit is set in USART_CTL0 Set by hardware when an Idle line is detected. It will not be set again until the RBNE bit or RFNE bit has been set itself. Cleared by writing 1 to IDLEC bit in USART_INTC register.
3	ORERR	Overrun error 0: No overrun error is detected 1: Overrun error is detected. An interrupt will occur if the RBNEIE or RFNEIE bit is set in USART_CTL0. In multibuffer communication, an interrupt will occur if the ERRIE bit is set in USART_CTL2. Set by hardware when the word in the receive shift register is ready to be transferred into the USART_RDATA register while the RBNE bit or RFF bit in USART_FCS is set. Cleared by writing 1 to OREC bit in USART_INTC register.
2	NERR	Noise error flag 0: No noise error is detected 1: Noise error is detected. In multibuffer communication, an interrupt will occur if the ERRIE bit is set in USART_CTL2. Set by hardware when noise error is detected on a received frame. Cleared by writing 1 to NEC bit in USART_INTC register. Note: When this bit and RBNE or RFNE bit appears at the same time, it does not generate an interrupt. When FIFO is enabled, the error is associated with the data in the USART_RDATA.
1	FERR	Frame error flag 0: No framing error is detected 1: Frame error flag or break character is detected. In multibuffer communication, an interrupt will occur if the ERRIE bit is set in USART_CTL2. Set by hardware when a de-synchronization, excessive noise or a break character is detected. This bit will be set when the maximum number of transmit attempts is reached without success (the card NACKs the data frame), when USART transmits in smartcard mode. Cleared by writing 1 to FEC bit in USART_INTC register. Note: When FIFO is enabled, the error is associated with the data in the USART_RDATA.
0	PERR	Parity error flag 0: No parity error is detected

1: Parity error flag is detected. An interrupt will occur if the PERRIE bit is set in USART_CTL0.

Set by hardware when a parity error occurs in receiver mode.

Cleared by writing 1 to PEC bit in USART_INTC register.

Note: When FIFO is enabled, the error is associated with the data in the USART_RDATA.

25.4.9. Interrupt status clear register (USART_INTC)

Address offset: 0x20

Reset value: 0x0000 0000

This register has to be accessed by word (32-bit).

31	30	29	28	27	26	25	24	23	22	21	20	19	18	17	16
Reserved											WUC	Reserved		AMC0	AMC1
											w			w	w

15	14	13	12	11	10	9	8	7	6	5	4	3	2	1	0
Reserved			EBC	RTC	Reserved	CTSC	LBDC	Reserved	TCC	Reserved	IDLEC	OREC	NEC	FEC	PEC
			w	w		w	w		w		w	w	w	w	w

Bits	Fields	Descriptions
31:21	Reserved	Must be kept at reset value.
20	WUC	Wakeup from deep-sleep mode clear Writing 1 to this bit clears the WUF bit in the USART_STAT register. This bit is reserved in UART3 / UART4 / UART6 / UART7.
19:18	Reserved	Must be kept at reset value.
17	AMC0	ADDR0 character match clear Writing 1 to this bit clears the AMF0 bit in the USART_STAT register.
16	AMC1	ADDR1 character match clear Writing 1 to this bit clears the AMF1 bit in the USART_STAT register.
15:13	Reserved	Must be kept at reset value.
12	EBC	End of block clear Writing 1 to this bit clears the EBF bit in the USART_STAT register. This bit is reserved in UART3 / UART4 / UART6 / UART7.
11	RTC	Receiver timeout clear Writing 1 to this bit clears the RTF flag in the USART_STAT register. This bit is reserved in UART3 / UART4 / UART6 / UART7.
10	Reserved	Must be kept at reset value.
9	CTSC	CTS change clear

		Writing 1 to this bit clears the CTSF bit in the USART_STAT register.
8	LBDC	LIN break detected clear Writing 1 to this bit clears the LBDF flag in the USART_STAT register. This bit is reserved in UART3 / UART4 / UART6 / UART7.
7	Reserved	Must be kept at reset value.
6	TCC	Transmission complete clear Writing 1 to this bit clears the TC bit in the USART_STAT register.
5	Reserved	Must be kept at reset value.
4	IDLEC	Idle line detected clear Writing 1 to this bit clears the IDLEF bit in the USART_STAT register.
3	OREC	Overrun error clear Writing 1 to this bit clears the ORERR bit in the USART_STAT register.
2	NEC	Noise detected clear Writing 1 to this bit clears the NERR bit in the USART_STAT register.
1	FEC	Frame error flag clear Writing 1 to this bit clears the FERR bit in the USART_STAT register
0	PEC	Parity error clear Writing 1 to this bit clears the PERR bit in the USART_STAT register.

25.4.10. Receive data register (USART_RDATA)

Address offset: 0x24

Reset value: Undefined

This register has to be accessed by word (32-bit)

31	30	29	28	27	26	25	24	23	22	21	20	19	18	17	16
Reserved															

15	14	13	12	11	10	9	8	7	6	5	4	3	2	1	0
Reserved						RDATA[9:0]									
										r					

Bits	Fields	Descriptions
31:10	Reserved	Must be kept at reset value.
9:0	RDATA[9:0]	Receive data value The received data character is contained in these bits. The value read in the MSB (bit6, bit7, bit8 or bit9 depending on the data length) will be the received parity bit, if receiving with the parity is enabled (PCEN bit set to 1 in

the USART_CTL0 register).

25.4.11. Transmit data register (USART_TDATA)

Address offset: 0x28

Reset value: Undefined

This register has to be accessed by word (32-bit).

31	30	29	28	27	26	25	24	23	22	21	20	19	18	17	16
Reserved															

15	14	13	12	11	10	9	8	7	6	5	4	3	2	1	0
Reserved						TDATA[9:0]									
										rw					

Bits	Fields	Descriptions
31:10	Reserved	Must be kept at reset value
9:0	TDATA[9:0]	Transmit Data value The transmit data character is contained in these bits. The value written in the MSB (bit6, bit7, bit8 or bit9 depending on the data length) will be replaced by the parity, when transmitting with the parity is enabled (PCEN bit set to 1 in the USART_CTL0 register). This register must be written only when TBE bit in USART_STAT register is set.

25.4.12. USART coherence control register (USART_CHC)

Address offset: 0xC0

Reset value: 0x0000 0000

This register has to be accessed by word (32-bit).

31	30	29	28	27	26	25	24	23	22	21	20	19	18	17	16
Reserved															

15	14	13	12	11	10	9	8	7	6	5	4	3	2	1	0
Reserved							EPERR	Reserved							HCM
							rc_w0								rw

Bits	Fields	Descriptions
31:9	Reserved	Must be kept at reset value.
8	EPERR	Early parity error flag. This flag will be set as soon as the parity bit has been detected, which is before RBNE flag. This flag is cleared by writing 0. 0: No parity error is detected

		1: Parity error is detected.
7:1	Reserved	Must be kept at reset value.
0	HCM	Hardware flow control coherence mode 0: nRTS signal equals to the RBNE in status register 1: nRTS signal is set when the last data bit (parity bit when pce is set) has been sampled.

25.4.13. USART FIFO control and status register (USART_FCS)

Address offset: 0xD0

Reset value: 0x0300 0400

This register has to be accessed by word (32-bit).

31	30	29	28	27	26	25	24	23	22	21	20	19	18	17	16
TFEIE	Reserved	TFTIE	Reserved	RFTIE	TFEC	TFTIF	TFEIF	Reserved	RFTIF	TFTCFG[2:0]			RFTCFG[2:0]		
rw		rw		rw	rw	r	r		rc_w0	rw			rw		

15	14	13	12	11	10	9	8	7	6	5	4	3	2	1	0
RFFIF	RFCNT[2:0]			RFF	RFE	RFFIE	FEN	TFF	TFE	TFT	RFT	Reserved	RFCNT[4:3]		ELNACK
rc_w0	r			r	r	rw	rw	r	r	r	r		r		rw

Bits	Fields	Descriptions
31	TFEIE	Transmit FIFO empty interrupt enable If this bit is set, an interrupt occurs whenever the TFE bit is set. 0: Transmit FIFO empty interrupt is disabled 1: Transmit FIFO empty interrupt is enabled
30	Reserved	Must be kept at reset value.
29	TFTIE	Transmit FIFO threshold interrupt enable If this bit is set, an interrupt will occur whenever the transmit FIFO reached the threshold configured in TFTCFG[2:0]. 0: Transmit FIFO threshold interrupt is disabled 1: Transmit FIFO threshold interrupt is enabled
28	Reserved	Must be kept at reset value.
27	RFTIE	Receive FIFO threshold interrupt enable If this bit is set, an interrupt will occur whenever the receive FIFO reached the threshold configured in RFTCFG. 0: Receive FIFO threshold interrupt is disabled 1: Receive FIFO threshold interrupt is enabled
26	TFEC	Transmit FIFO empty flag clear Writing 1 to this bit clears the TFE flag.

25	TFTIF	Transmit FIFO threshold interrupt flag The bit is valid when TFTIE bit is set. 0: Transmit FIFO does not reach the programmed threshold 1: Transmit FIFO reached the programmed threshold
24	TFEIF	Transmit FIFO empty interrupt flag The bit is valid when TFEIE bit is set. 0: Transmit FIFO is not empty 1: Transmit FIFO is empty
23	Reserved	Must be kept at reset value.
22	RFTIF	Receive FIFO threshold interrupt flag The bit is valid when RFTIE bit is set. 0: Receive FIFO does not reach the programmed threshold 1: Receive FIFO reached the programmed threshold
21:19	TFTCFG[2:0]	Transmit FIFO threshold configuration 000:Transmit FIFO reaches 1/8 of its depth 001:Transmit FIFO reaches 1/4 of its depth 010:Transmit FIFO reaches 1/2 of its depth 011:Transmit FIFO reaches 3/4 of its depth 100:Transmit FIFO reaches 7/8 of its depth 101:Transmit FIFO becomes empty 11x: Reserved
18:16	RFTCFG[2:0]	Receive FIFO threshold configuration 000:Receive FIFO reaches 1/8 of its depth 001:Receive FIFO reaches 1/4 of its depth 010:Receive FIFO reaches 1/2 of its depth 011:Receive FIFO reaches 3/4 of its depth 100:Receive FIFO reaches 7/8 of its depth 101:Receive FIFO becomes full 11x: Reserved
15	RFFIF	Receive FIFO full interrupt flag The bit is valid when RFFIE bit is set. 0: Receive FIFO is not full 1: Receive FIFO is full
14:12	RFCNT[2:0]	Receive FIFO counter number These bits and RFCNT[4:3] bits determine the receive FIFO counter number.
11	RFF	Receive FIFO full flag 0: Receive FIFO is not full 1: Receive FIFO is full. An interrupt will occur if the RFFIE bit is set. Set by hardware when the number of received data is RXFIFO size + 1.

10	RFE	Receive FIFO empty flag 0: Receive FIFO is not empty 1: Receive FIFO is empty.
9	RFFIE	Receive FIFO full interrupt enable If this bit is set, an interrupt occurs when the RFF bit is set. 0: Receive FIFO full interrupt is disable 1: Receive FIFO full interrupt is enable
8	FEN	FIFO enable 0: FIFO is disable 1: FIFO is enable This bit field cannot be written when the USART is enabled (UEN = 1). Note: Do not change the FEN bit when receiving or transmitting data is not accomplished. When UEN is cleared and reconfigure the UEN without changing the FEN bit, please flush the FIFO if do not need the pervious FIFO value.
7	TFF	Transmit FIFO full flag 0: Transmit FIFO is not full 1: Transmit FIFO is full
6	TFE	Transmit FIFO empty flag 0: Transmit FIFO is not empty 1: Transmit FIFO is empty. An interrupt will occur if the TFEIE bit is set. Set by hardware when the transmit FIFO is empty. The flag is cleared when the transmit FIFO has at least one data. The bit can also be set by setting TXFCMD bit in USART_CMD.
5	TFT	Transmit FIFO threshold flag 0: Transmit FIFO does not reach the programmed threshold 1: Transmit FIFO reached the programmed threshold. An interrupt will occur if the TFTIE bit is set. Set by hardware when the transmit FIFO reaches the threshold configured in TFTCFG[2:0].
4	RFT	Receive FIFO threshold flag 0: Receive FIFO does not reach the programmed threshold 1: Receive FIFO reached the programmed threshold. An interrupt will occur if the RFTIE bit is set. Set by hardware when the receive FIFO reaches the threshold configured in RFTCFG[2:0]. This means that there are (RFTCFG[2:0] - 1) data in the Receive FIFO and one data in the USART_RDATA register **Note:** When the RFTCFG[2:0] = 0b101 and 16 data are available, RFT flag will be set.
3	Reserved	Must be kept at reset value.
2:1	RFCNT[4:3]	Receive FIFO counter number

		These bits and RFCNT[2:0] bits determine the receive FIFO counter number.
0	ELNACK	Early NACK when smartcard mode is selected. The NACK pulse occurs 1/16 bit time earlier when the parity error is detected. 0:Early NACK disable when smartcard mode is selected 1:Early NACK enable when smartcard mode is selected This bit is reserved in UART3 / UART4 / UART6 / UART7.

26. Inter-integrated circuit interface (I2C)

26.1. Overview

The I2C (inter-integrated circuit) module provides an I2C interface which is an industry standard two-line serial interface for MCU to communicate with external I2C interface. I2C bus uses two serial lines: a serial data line, SDA, and a serial clock line, SCL.

The I2C interface implements standard I2C protocol with standard mode, fast mode and fast mode plus as well as CRC calculation and checking, SMBus (system management bus), and PMBus (power management bus). It also supports multi-master I2C bus. The I2C interface provides DMA mode for users to reduce CPU overload.

26.2. Characteristics

- Parallel-bus to I2C-bus protocol converter and interface.
- Both master and slave functions with the same interface.
- Bi-directional data transfer between master and slave.
- Supports 7-bit and 10-bit addressing and general call addressing.
- Multiple 7-bit slave addresses (2 addresses, 1 with configurable mask).
- Programmable setup time and hold time.
- Multi-master capability.
- Supports standard mode (up to 100 kHz) and fast mode (up to 400 kHz) and fast mode plus (up to 1MHz, this mode must be enabled in SYSCFG_PMCFG).
- Configurable SCL stretching in slave mode.
- Supports DMA mode.
- SMBus 3.0 and PMBus 1.3 compatible.
- Optional PEC (packet error checking) generation and check.
- Programmable analog and digital noise filters.
- Wakeup from sleep mode and Deep-sleep mode on I2C address match.
- Independent clock from PCLK.

26.3. Function overview

Figure 26-1. I2C module block diagram below provides details on the internal configuration of the I2C interface.

Figure 26-1. I2C module block diagram

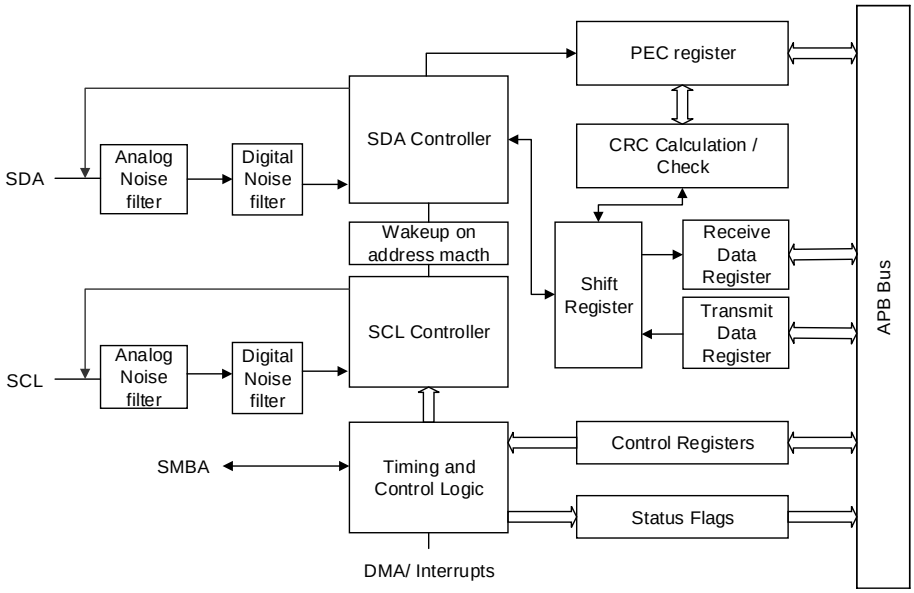

Table 26-1. Definition of I2C-bus terminology (refer to the I2C specification of Philips semiconductors)

Term	Description
Transmitter	the device which sends data to the bus
Receiver	the device which receives data from the bus
Master	the device which initiates a transfer, generates clock signals and terminates a transfer
Slave	the device addressed by a master
Multi-master	more than one master can attempt to control the bus at the same time without corrupting the message
Arbitration	procedure to ensure that, if more than one master tries to control the bus simultaneously, only one is allowed to do so and the winning master's message is not corrupted

26.3.1. Clock requirements

The I2C clock is independent of the PCLK frequency, so that the I2C can be operated independently.

This I2C clock (I2CCLK) can be selected from the following three clock sources:

- PCLK1: APB1 clock (default value)
- PLL2R: Phase Lock Loop
- IRC64M: Internal 64M RC oscillator
- LPIRC4M: Low Power Internal 4M RC oscillator

The I2CCLK period t_{I2CCLK} must match the conditions as follows:

- $t_{I2CCLK}<(t_{LOW}-t_{filters})/4$
- $t_{I2CCLK}<t_{HIGH}$

with:

t_{LOW}: SCL low time

t_{HIGH}: SCL high time

$t_{filters}$: When the filters are enabled, represent the delays by the analog filter and digital filter.

Analog filter delay is maximum 130ns. Digital filter delay is DNF[3:0]×t_{I2CCLK}.

The period of PCLK clock t_{PCLK} match the conditions as follows:

- $t_{PCLK}<4/3*t_{SCL}$

with:

t_{SCL}: the period of SCL

Note: When the I2C kernel is provided by PCLK, this clock must match the conditions for t_{I2CCLK}.

26.3.2. I2C communication flow

An I2C device is able to transmit or receive data whether it's a master or a slave, thus, there're 4 operation modes for an I2C device:

- Slave transmitter
- Slave receiver
- Master transmitter
- Master receiver

Data validation

The data on the SDA line must be stable during the HIGH period of the clock. The HIGH or LOW state of the data line can only change when the clock signal on the SCL line is LOW (see ***Figure 26-2. Data validation***). One clock pulse is generated for each data bit transferred.

Figure 26-2. Data validation

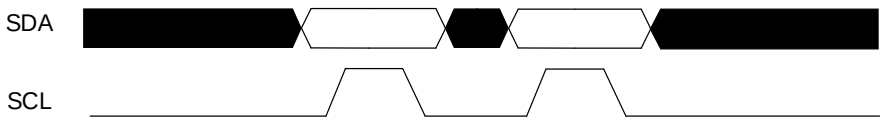

START and STOP signal

All transactions begin with a START and are terminated by a STOP (see ***Figure 26-3. START and STOP condition***). A HIGH to LOW transition on the SDA line while SCL is HIGH defines a START signal. A LOW to HIGH transition on the SDA line while SCL is HIGH defines a STOP

signal.

Figure 26-3. START and STOP condition

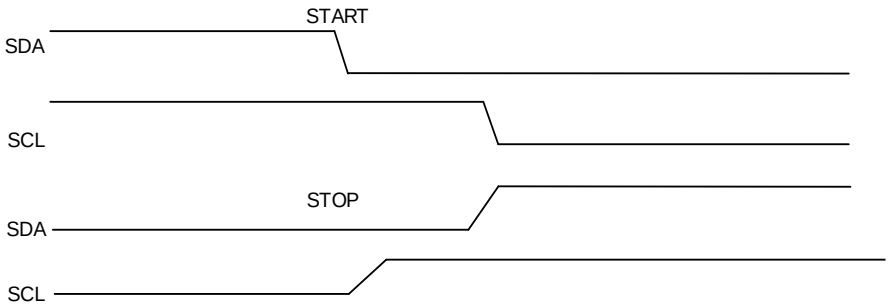

Each I2C device is recognized by a unique address (whether it is a microcontroller, LCD driver, memory or keyboard interface) and can operate as either a transmitter or receiver, depending on the function of the device. It operates in slave mode by default. When it generates a START signal, the interface automatically switches from slave to master. If an arbitration loss or a STOP generation occurs, then the interface switches from master to slave, allowing multimaster capability.

An I2C slave will continue to detect addresses after a START signalon I2C bus and compare the detected address with its slave address which is programmable by software. Once the two addresses match, the I2C slave will send an ACK to the I2C bus and responses to the following command on I2C bus: transmitting or receiving the desired data. Additionally, if General Call is enabled by software, the I2C slave always responses to a General Call Address (0x00). The I2C block support both 7-bit and 10-bit address modes.

Data and addresses are transferred as 8-bit bytes, MSB first. The first byte(s) following the START signalcontain the address (one in 7-bit mode, two in 10-bit mode). The address is always transmitted in master mode.

A 9th clock pulse follows the 8 clock cycles of byte transmission, during which the receiver must send an acknowledge bit to the transmitter. Acknowledge can be enabled or disabled by software.

An I2C master always initiates or end a transfer using START or STOP signaland it’s also responsible for SCL clock generation.

In master mode, if AUTOEND=1, the STOP signalis generated automatically by hardware. If AUTOEND=0, the STOP signalgenerated by software, or the master can generate a RESTART signalto start a new transfer.

Figure 26-4. I2C communication flow with 10-bit address (Master Transmit)

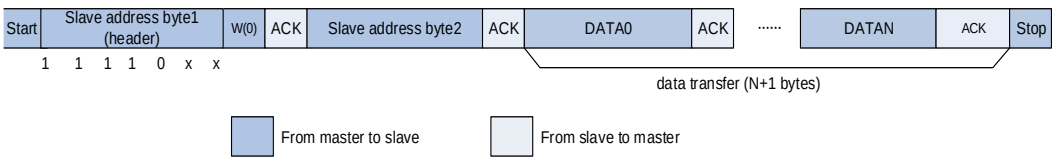

Figure 26-5. I2C communication flow with 7-bit address (Master Transmit)

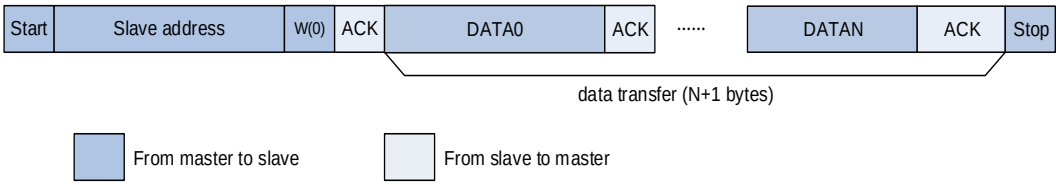

Figure 26-6. I2C communication flow with 7-bit address (Master Receive)

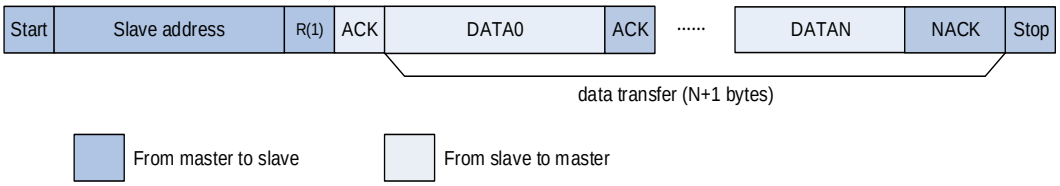

In 10-bit addressing mode, the HEAD10R bit can configured to decide whether the complete address sequence must be executed, or only the header to be sent. When HEAD10R=0, the complete 10 bit address read sequence must be excuted with START + header of 10-bit address in write direction + slave address byte 2 + RESTART + header of 10-bit address in read direction, as is shown in ***Figure 26-7. I2C communication flow with 10-bit address (Master Receive when HEAD10R=0)***.

In 10-bit addressing mode, if the master reception follows a master transmission between the same master and slave, the address read sequence can be RESTART + header of 10-bit address in read direction, as is shown in ***Figure 26-8. I2C communication flow with 10-bit address (Master Receive when HEAD10R=1)***.

Figure 26-7. I2C communication flow with 10-bit address (Master Receive when HEAD10R=0)

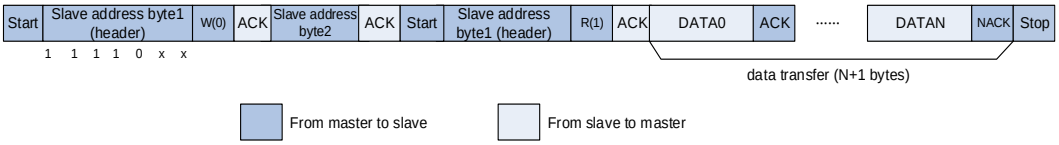

Figure 26-8. I2C communication flow with 10-bit address (Master Receive when HEAD10R=1)

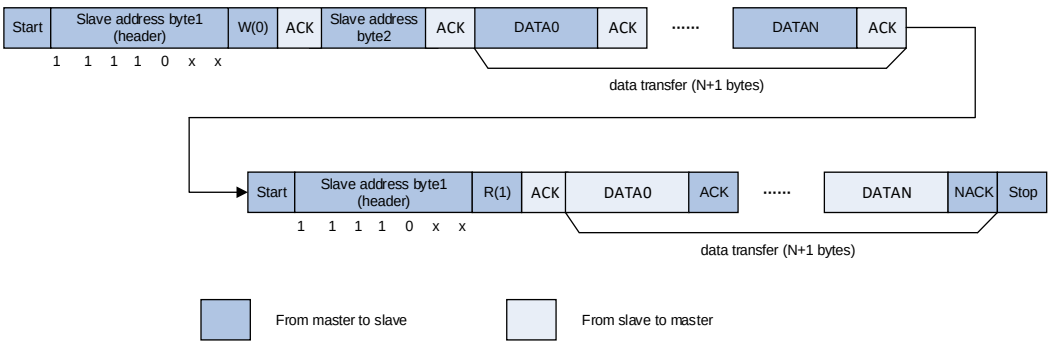

26.3.3. Noise filter

The noise filters must be configured before setting the I2CEN bit in I2C_CTL0 register if it is necessary. The analog noise filter is disabled by setting the ANOFF bit in I2C_CTL0 register and enabled when ANOFF is 0. It can suppress spikes with a pulse width up to 130ns in fast mode and fast mode plus.

The digital noise filter can be used by configuring the DNF[3:0] bit in I2C_CTL0 register. The the level of the SCL or the SDA will not be changed if the level is stable for no more than DNF[3:0]×t_{I2CCLK}. The length of spikes to be suppressed is configured by DNF[3:0].

26.3.4. I2C timings configuration

The PSC[3:0], SCLDELY[3:0] and SDADELY[3:0] bits in the I2C_TIMING register must be configured in order to guarantee a correct data hold and setup time used in I2C communication.

If the data is already available in I2C_TDATA register, the data will be sent on SDA after the SDADELY delay. As is shown in ***Figure 26-9. Data hold time***.

Figure 26-9. Data hold time

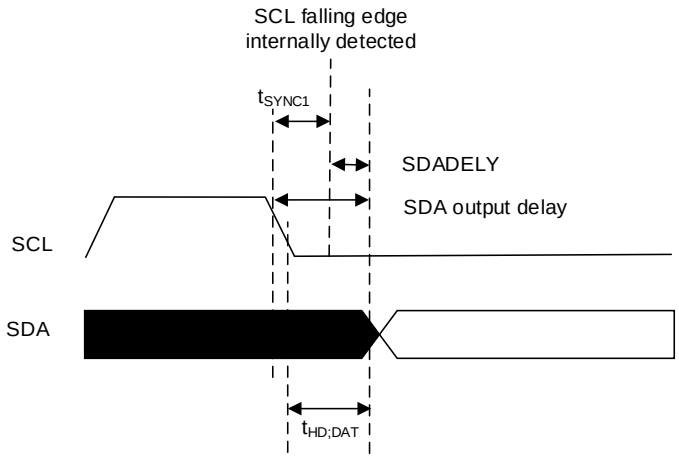

The SCLDELY counter starts when the data is sent on SDA output. As is shown in ***Figure 26-10. Data setup time***.

Figure 26-10. Data setup time

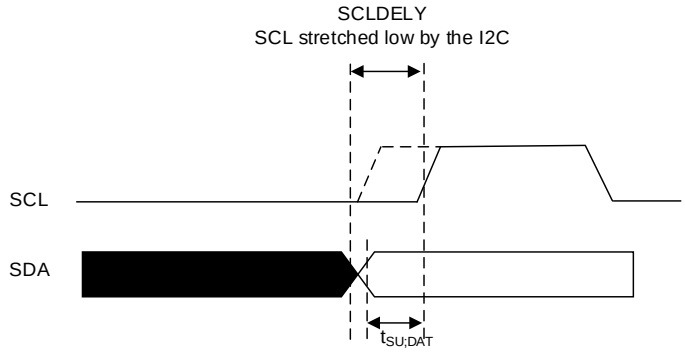

When the SCL falling edge is internally detected, a delay is inserted before sending SDA output. This delay is $t_{SDADELY}$ = SDADELY * t_{PSC} + t_{I2CCLK} where t_{PSC} = (PSC+1) * t_{I2CCLK}. $t_{SDADELY}$ effects $t_{HD;DAT}$. The total delay of SDA output is t_{SYNC1} + {[SDADELY * (PSC+1) + 1] * t_{I2CCLK}}. t_{SYNC1} depends on SCL falling slope, the delay of analog filter, the delay of digital filter and delay of SCL synchronization to I2CCLK clock. The delay of SCL synchronization to I2CCLK clock is 2 to 3 t_{I2CCLK}.

SDADELY must match condition as follows:

- SDADELY≥{t_f(max)+$t_{HD;DAT}$(min)-t_{AF}(min)-[(DNF+3)*t_{I2CCLK}]}/[(PSC+1)*t_{I2CCLK}]
- SDADELY≤{$t_{HD;DAT}$(max)-t_{AF}(max)-[(DNF+4)*t_{I2CCLK}]}/[(PSC+1)*t_{I2CCLK}]

Note: t_{AF} is the delay of analog filter. The $t_{HD;DAT}$ should be less than the maximum of $t_{VD;DAT}$.

When SS = 0, after $t_{SDADELY}$ delay, the slave had to stretch the clock before the data writing to I2C_TDATA register, SCL is low during the data setup time. The setup time is $t_{SCLDELY}$=(SCLDELY+1)*t_{PSC}. $t_{SCLDELY}$ effects $t_{SU;DAT}$.

SCLDELY must match condition as follows:

- SCLDELY≥{[t_r(max)+$t_{SU;DAT}$(min)]/[(PSC+1)*t_{I2CCLK}]}-1

In master mode, the SCL clock high and low levels must be configured by programming the PSC[3:0], SCLH[7:0] and SCLL[7:0] bits in the I2C_TIMING register.

When the SCL falling edge is internally detected, a delay is inserted before releasing the SCL output. This delay is t_{SCLL}=(SCLL+1)*t_{PSC} where t_{PSC}=(PSC+1)*t_{I2CCLK}. t_{SCLL} impacts the SCL low time t_{LOW}.

When the SCL rising edge is internally detected, a delay is inserted before forcing the SCL output to low level. This delay is t_{SCLH}=(SCLH+1)*t_{PSC} where t_{PSC}=(PSC+1)*t_{I2CCLK}. t_{SCLH} impacts the SCL high time t_{HIGH}.

Note: When the I2C is enabled, the timing configuration and SS mode must not be changed.

Table 26-2. Data setup time and data hold time

Symbol	Parameter	Standard mode		Fast mode		Fast mode plus		SMBus		Unit
		Min	Max	Min	Max	Min	Max	Min	Max	
$t_{HD;DAT}$	Data hold time	0	-	0	-	0	-	0.3	-	us
$t_{VD;DAT}$	Data valid time	-	3.45	-	0.9	-	0.45	-	-	
$t_{SU;DAT}$	Data setup time	250	-	100	-	50	-	250	-	ns
t_r	Rising time of SCL and SDA	-	1000	-	300	-	120	-	1000	
t_f	falling time of SCL and SDA	-	300	-	300	-	120	-	300	

26.3.5. I2C reset

A software reset can be performed by clearing the I2CEN bit in the I2C_CTL0 register. When a software reset is generated, the SCL and SDA are released. The communication control bits and status bits come back to the reset value. Software reset have no effect on configuration registers. The impacted register bits are START, STOP, NACKEN in I2C_CTL1 register, I2CBSY, TBE, TI, RBNE, ADDSEND, NACK, TCR, TC, STPDET, BERR, LOSTARB and OUERR in I2C_STAT register. Additionally, when the SMBus is supported, PECTRANS in I2C_CTL1 register, PECERR, TIMEOUT and SMBALT in I2C_STAT are also impacted.

In order to perform the software reset, I2CEN must be kept low during at least 3 APB clock cycles. This is ensured by writing software sequence as follows:

- Write I2CEN = 0
- Check I2CEN = 0
- Write I2CEN = 1

26.3.6. Data transfer

Data Transmission

When transmitting data,, if TBE is 0, it indicates that the I2C_TDATA register is not empty, the data in I2C_TDATA register is moved to the shift register after the 9th SCL pulse. Then the data will be transmitted through the SDA line from the shift register. If TBE is 1, it indicates that the I2C_TDATA register is empty, the SCL line is stretched low until I2C_TDATA is not empty. The stretch begins after the 9th SCL pulse.

Figure 26-11. Data transmission

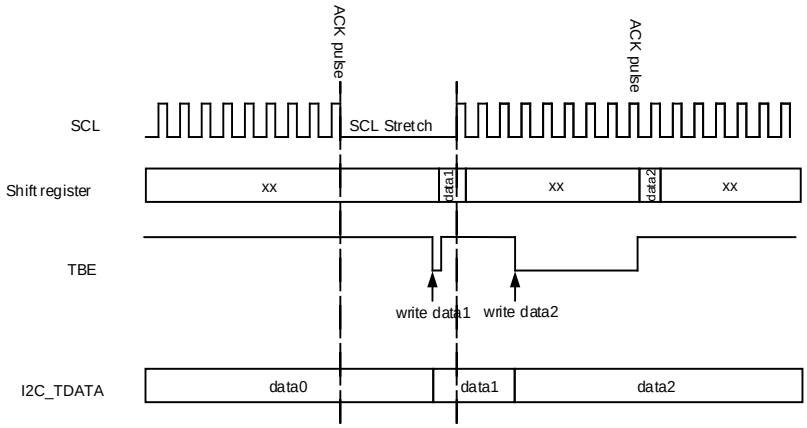

Data Reception

When receiving data, the data will be received in the shift register first. If RBNE is 0, the data in the shift register will move into I2C_RDATA register. If RBNE is 1, the SCL line wii be stretched until the previous received data in I2C_RDATA is read. The stretch is inserted before the acknowledge pulse.

Figure 26-12. Data reception

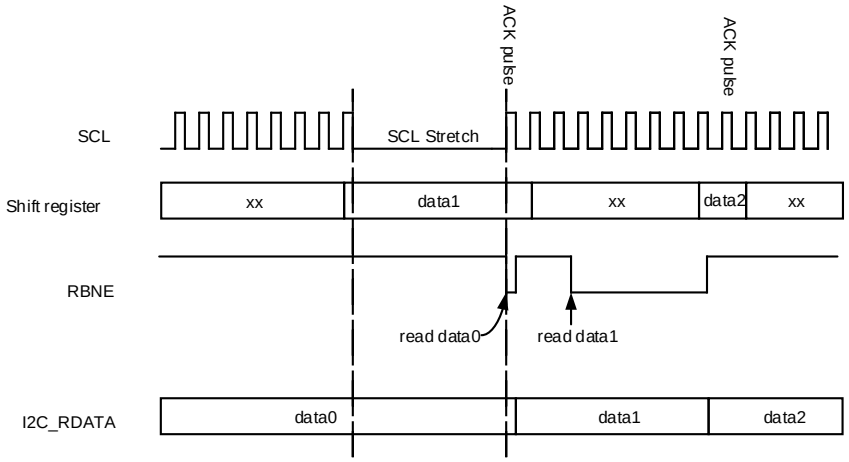

Reload and automatic end mode

In order to manage byte transfer and to shut down the communication in modes as is shown in ***Table 26-3. Communication modes to be shut down***, the I2C embedded a byte counter in the hardware.

Table 26-3. Communication modes to be shut down

Working mode	Action
Master mode	NACK, STOP and RESTART generation

Working mode	Action
Slave receiver mode	ACK control
SMBus mode	PEC generation/checking

The number of bytes to be transferred is configured by BYTENUM[7:0] in I2C_CTL1 register. If BYTENUMis greater than 255, or in slave byte control mode, the reload mode must be enabled by setting the RELOAD bit in I2C_CTL1 register. In reload mode, when BYTENUM counts to 0, the TCR bit will be set, and an interrupt will be generated if TCIE is set. Once the TCR flag is set, SCL is stretched. The TCR bit is cleared by writing a non-zero number in BYTENUM.

Note: The reload mode must be disabled after the last reloading of BYTENUM[7:0].

The reload mode must be disabled when the automatic end mode is enabled. In automatic end mode, the master will send a STOP signal automatically when the BYTENUM[7:0] counts to 0.

26.3.7. I2C slave mode

Initialization

When works in slave mode, at least one slave address should be enabled. Slave address 1 can be programmed in I2C_SADDR0 register and slave address 2 can be programmed in I2C_SADDR1 register. ADDRESSEN in I2C_SADDR0 register and ADDRESS2EN in I2C_SADDR1 register should be set when the corresponding address is used. 7-bit address or 10-bit address can be programmed in ADDRESS[9:0] in I2C_SADDR0 register by configuring the ADDFORMAT bit in 7-bit address or 10-bit address.

The ADDM[6:0] in I2C_CTL2 register defines which bits of ADDRESS[7:1] are compared with an incoming address byte, and which bits are ignored.

The ADDMSK2[2:0] is used to mask ADDRESS2[7:1] in I2C_SADDR1 register. For details, refer to the description of ADDMSK2[2:0] in I2C_SADDR1 register.

When the I2C received address matches one of its enabled addresses, the ADDSEND will be set, and an interrupt is generated if the ADDMIE bit is set. The READDR[6:0] bits in I2C_STAT register will store the received address. And TR bit in I2C_STAT register updates after the ADDSEND is set. The bit will let the slave to know whether to act as a transmitter or receiver.

SCL line stretching

The clock stretching is used in slave mode by default (SS=0), the SCL line can be stretched low if necessary. The SCL will be stretched in following cases.

- The SCL is stretched when the ADDSEND bit is set, and released when the ADDSEND bit is cleared.
- In slave transmitting mode, after the ADDSEND bit is cleared, the SCL will be stretched

before the first data byte writing to the I2C_TDATA register. Or the SCL will be stretched before the new data is written to the I2C_TDATA register after the previous data transmission is completed.

- In slave receiving mode, a new reception is completed but the data in I2C_RDATA register has not been read.
- When SBCTL=1 and RELOAD=1, after the transfer of the last byte, TCR is set. Before the TCR is cleared, the SCL will be stretched.
- The I2C stretches SCL low during $[(SDADELY+SCLDELY+1)*(PSC+1)+1]*t_{I2CCLK}$ after detecting the SCL falling edge.

The clock stretching can be disabled by setting the SS bit in I2C_CTL0 register (SS=1). The SCL will not be stretched in following cases.

- When the ADDSEND is set, the SCL will be not stretched.
- In slave transmitting mode, before the first SCL pulse, the data should be written in the I2C_TDATA register . Or else the OUERR bit in the I2C_STAT register will be set, if the ERRIE bit is set, an interrupt will be generated. When the STPDET bit is set and the first data transmission starts, OUERR bit in the I2C_STAT register will also be set.
- In slave receiving mode, before the 9th SCL pulse (ACK pulse) occurred by the next data byte, the data must be read out from the I2C_RDATA register. Or else the OUERR bit in the I2C_STAT register will be set, if the ERRIE bit is set, and an interrupt will be generated.

Slave byte control mode

In slave receiving mode, the slave byte control mode can be enabled by setting the SBCTL bit in the I2C_CTL0 register to allow byte ACK control. When SS=1, the slave byte control mode is not allowed.

When using slave byte control mode, the reload mode must be enabled by setting the RELOAD bit in I2C_CTL1 register. In slave byte control mode, BYTENUM[7:0] in I2C_CTL1 register must be configured as 1 in the ADDSEND interrupt service routine and reloaded to 1 after each byte received. The TCR bit in I2C_STAT register will be set when a byte is received, the SCL will be stretched low by slave between the 8th and 9th clock pulses. Then the data can be read from the I2C_RDATA register, and the slave determines to send an ACK or a NACK by configuring the NACKEN bit in the I2C_CTL1 register. When the BYTENUM[7:0] is written a non-zero value, the slave will release the stretch.

When the BYTENUM[7:0] is greater than 0x1, there is no stretch between the reception of two data bytes.

Note: The SBCTL bit can be configured in following cases:

1. I2CEN=0.
2. The slave has not been addressed.
3. ADDSEND=1.

Only when the ADDSEND=1 or TCR=1, the RELOAD bit can be modified.

Figure 26-13. I2C initialization in slave mode

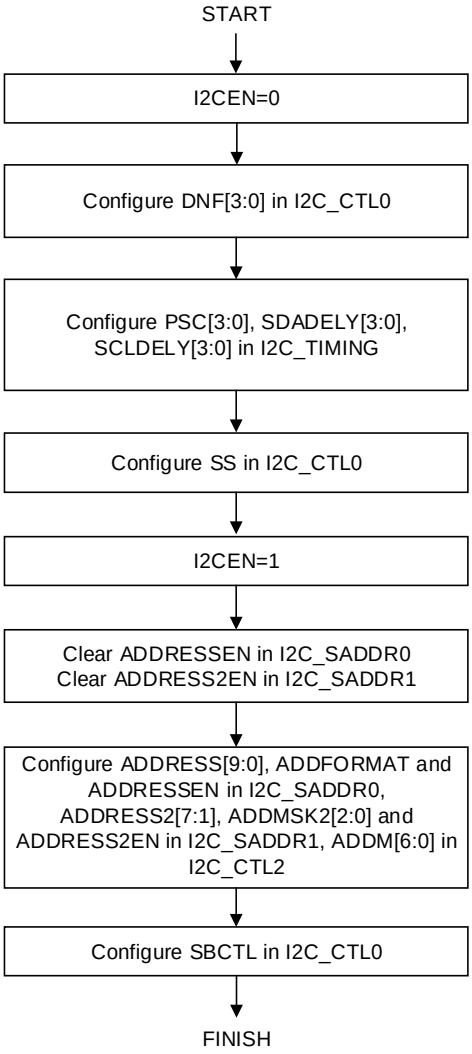

Programming model in slave transmitting mode

When the I2C_TDATA register is empty, the TI bit in I2C_STAT register will be set. If the TIE bit in I2C_CTL0 register is set, an interrupt will be generated. The NACK bit in I2C_STAT register will be set when a NACK is received. And an interrupt is generated if the NACKIE bit is set in the I2C_CTL0 register. The TI bit in I2C_STAT register will not be set when a NACK is received.

The STPDET bit in I2C_STAT register will be set when a STOP is received. If the STPDETIE in I2C_CTL0 register is set, an interrupt will be generated.

When SBCTL is 0, if ADDSEND=1, and the TBE bit in I2C_STAT register is 0, the data in I2C_TDATA register can be chosed to be transmitted or flushed. The data is flushed by setting the TBE bit.

When SBCTL=1, the slave works in slave byte control mode, the BYTENUM[7:0] must be

configured in the ADDSEND interrupt service routine. And the number of TI events is equal to the value of BYTENUM[7:0].

When SS=1, the SCL will not be stretched when ADDSEND bit in I2C_STAT register is set. In this case, the data in I2C_TDATA register can not be flushed in ADDSEND interrupt service routine. So the first byte to be sent must be programmed in the I2C_TDATA register previously.

- This data can be the one which is written in the last TI event of the last transfer.
- Setting the TBE bit can flush the data if it is not the one to be sent, , then a new byte can be written in I2C_TDATA register. The STPDET must be 0 when the data transmission begins. Or else the OUERR bit in I2C_STAT register will be set.
- When interrupt or DMA is used in slave transmitter, if a TI event is needed, in order to generate a TI event both the TI bit and the TBE bit must be set.

Figure 26-14. Programming model for slave transmitting when SS=0

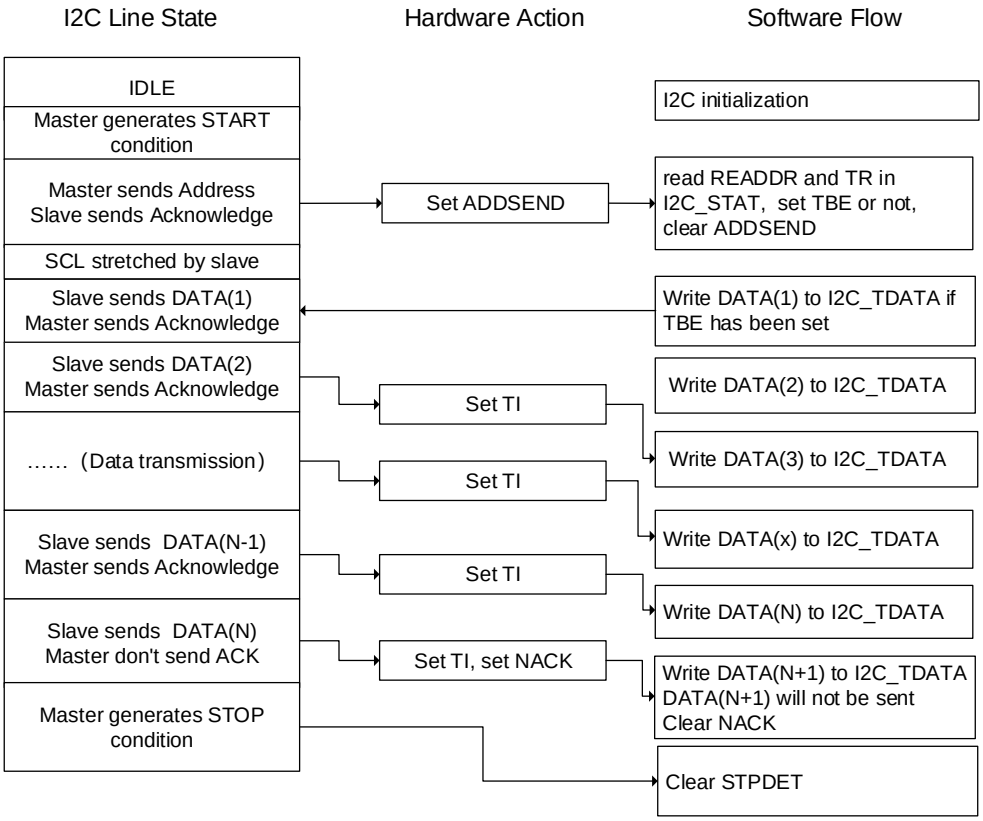

Figure 26-15. Programming model for slave transmitting when SS=1

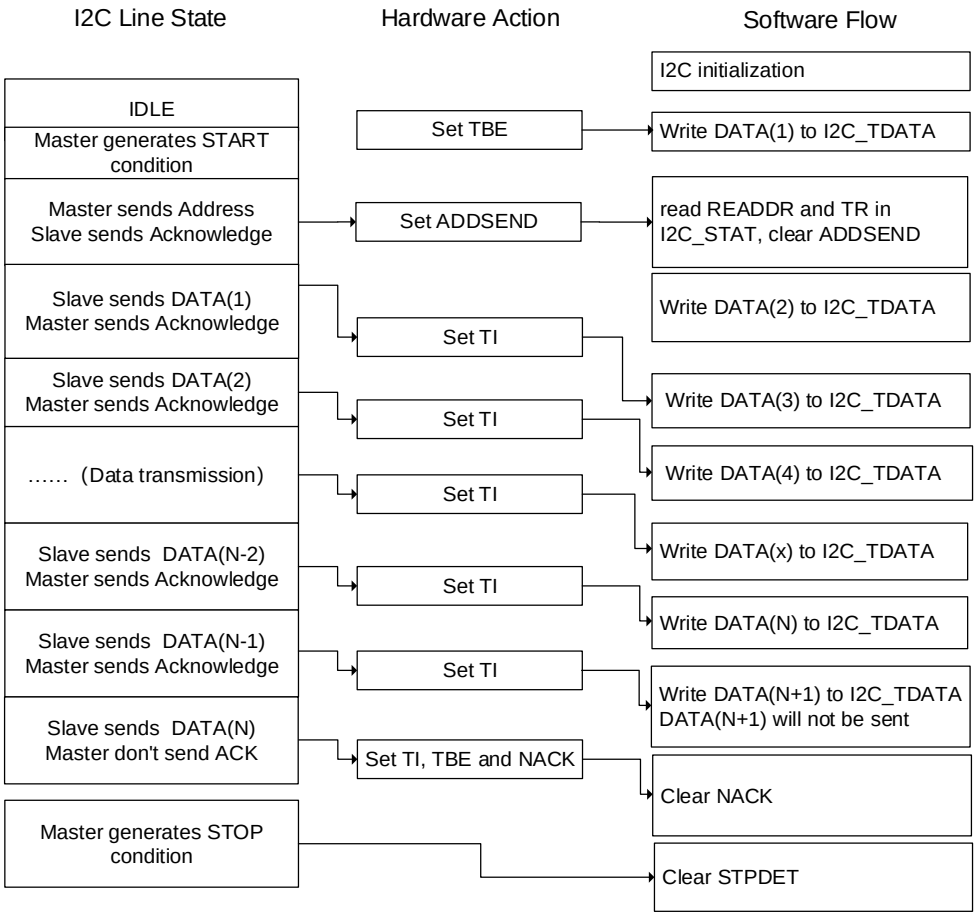

Programming model in slave receiving mode

When the I2C_RDATA is not empty, the RBNE bit in I2C_STAT register is set, and if the RBNEIE bit in I2C_CTL0 register is set, an interrupt will be generated. When a STOP is received, STPDET will be set in I2C_STAT register. If the STPDETIE bit in I2C_CTL0 register is set, and an interrupt will be generated.

Figure 26-16. Programming model for slave receiving

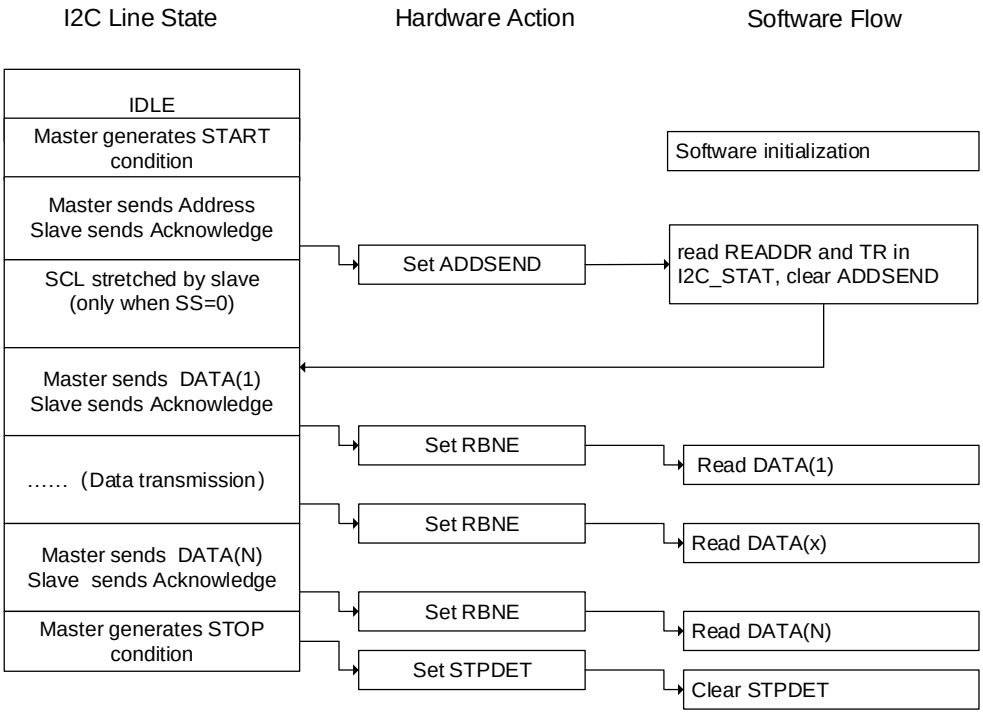

26.3.8. I2C master mode

Initialization

The SCLH[7:0] and SCLL[7:0] in I2C_TIMING register should be configured when I2CEN is 0. In order to support multi-master communication and slave clock stretching, a clock synchronization mechanism is implemented.

The SCLL[7:0] and SCLH[7:0] are used for the low level counting and high level couting respectively. After a t_{SYNC1} delay, when the SCL low level is detected, the SCLL[7:0] starts counting, if the SCLL[7:0] in I2C_TIMING register is reached by SCLL[7:0] counter, the I2C will release the SCL clock. After a t_{SYNC2} delay, when the SCL high level is detected, the SCLH[7:0] starts counting, if the SCLH[7:0] in I2C_TIMING register is reached by SCLH[7:0] counter, the I2C will stretch the SCL clock.

So the master clock period is:

$t_{SCL}=t_{SYNC1}+t_{SYNC2}+\{[(SCLH[7:0]+1)+(SLLL[7:0]+1)]*(PSC+1)*t_{I2CCLK}\}$.

The t_{SYNC1} depends on the SCL falling slope, delay by input analog and digital noise filter and SCL synchronization with I2CCLK clock, which generally 2 to 3 I2CCLK periods. The t_{SYNC2} depends on the SCL rising slope, delay by input analog and digital noise filter and SCL synchronization with I2CCLK clock, which generally 2 to 3 I2CCLK periods. The delay by digital noise filter is $DNF[3:0]*t_{I2CCLK}$.

When works in master mode, the ADD10EN bit, SADDRESS[9:0] bits, TRDIR bit should be

configured in I2C_CTL1 register. When the addressing mode is 10-bit in master receiving mode, the HEAD10R bit must be configured to decide whether the complete address sequence must be executed, or only the header to be sent. The number of bytes to be transferred should be configured in BYTENUM[7:0] in I2C_CTL1 register. If the number of bytes to be transferred is equal to or greater than 255, BYTENUM[7:0] should be configured as 0xFF. Then the master sends the START signal. All the bits above should be configured before the START is set. The slave address will be sent after the START signal when the I2CBSY bit I2C_STAT register is detected as 0. When the arbitration is lost, the master changes to slave mode and the START bit will be cleared by hardware. When the slave address has been sent, the START bit will be cleared by hardware.

In 10-bit addressing mode, if the master receives a NACK after the transmission of 10-bit header, the master will resend it until ACK is received. The ADDSENDC bit must be set to stop sending the slave address.

If the START bit is set, meanwhile the ADDSEND is set by addressing as a slave, the master changes to slave mode. The ADDSENDC bit must be set to clear the START bit.

Figure 26-17. I2C initialization in master mode

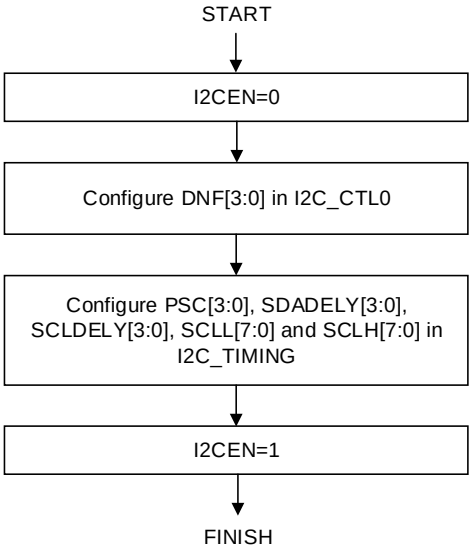

Programming model in master transmitting mode

In master transmitting mode, the TI bit is set after the ACK is received of each byte transmission. If the TIE bit in I2C_CTL0 register is set, an interrupt will be generated. The bytes to be transferred is programmed in BYTENUM[7:0] in I2C_CTL0 register. If the bytes to be transferred is greater than 255, RELOAD bit in I2C_CTL0 register must be set to enable the reload mode. In reload mode, when data of BYTENUM[7:0] bytes have been transferred, the TCR bit in I2C_STAT register will be set and the SCL stretches unitil BYTENUM[7:0] is modified with a non-zero value.

When a NACK is received, the TI bit will not set.

- If data of BYTENUM[7:0] bytes have been transferred and RELOAD=0, the AUTOEND bit in I2C_CTL1 can be set to generate a STOP signal automatically. When AUTOEND is 0, the TC bit in I2C_STAT register will be set and the SCL is stretched. In this case, the master can generate a STOP signal by setting the STOP bit in the I2C_CTL1 register. Or generate a RESTART signalto start a new transfer. The TC bit is cleared when the START / STOP bit is set.
- If a NACK is received, a STOP signal is automatically generated, the NACK is set in I2C_STAT register, if the NACKIE bit is set, an interrupt will be generated.

Note: When the RELOAD bit is 1, the AUTOEND has no effect.

Figure 26-18. Programming model for master transmitting (N<=255)

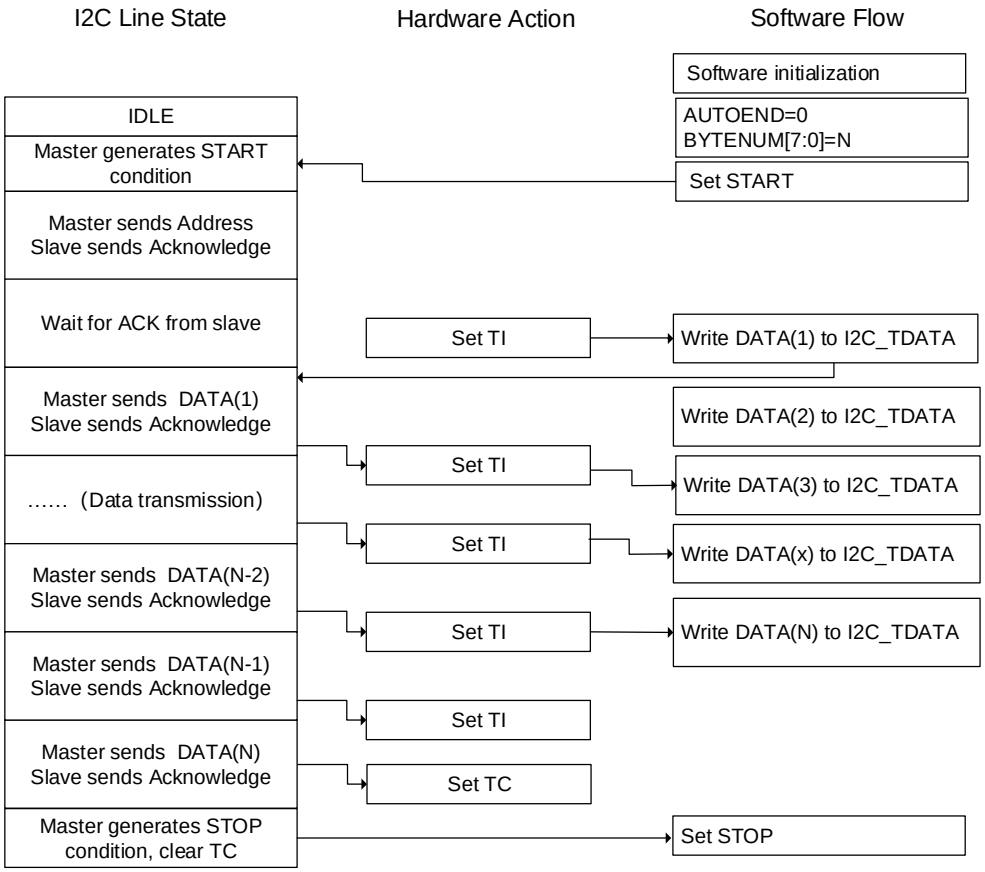

Figure 26-19. Programming model for master transmitting (N>255)

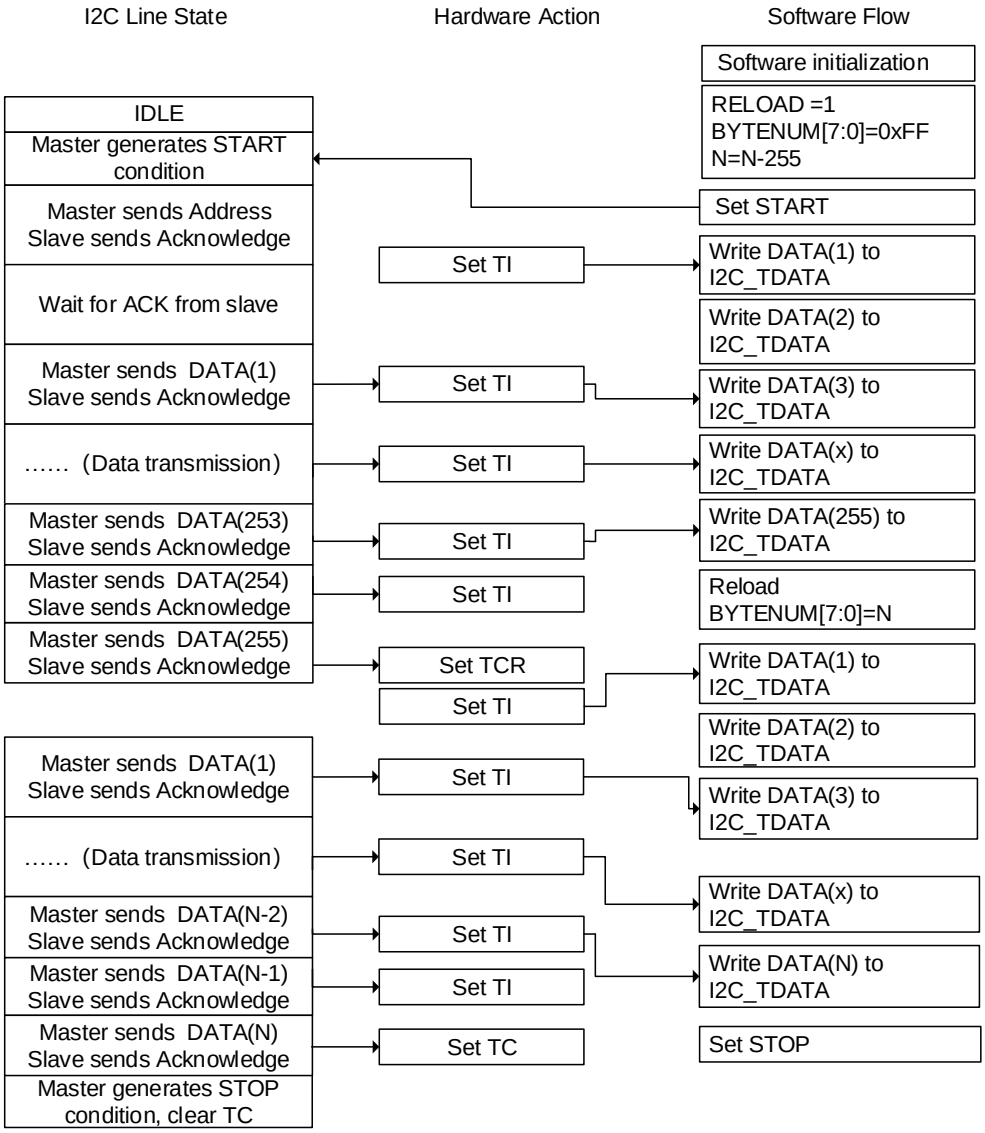

Programming model in master receiving mode

In master receiving mode, the RBNE bit in I2C_STAT register will be set when a byte is received. If the RBNEIE bit is set in I2C_CTL0 register, an interrupt will be generated. If the number of bytes to be received is greater than 255, RELOAD bit in I2C_CTL0 register must be set to enable the reload mode. In reload mode, when data of BYTENUM[7:0] bytes have been transferred, the TCR bit in I2C_STAT register will be set and the SCL stretches unitil BYTENUM[7:0] is modified with a non-zero value.

If data of BYTENUM[7:0] bytes have been transferred and RELOAD=0, the AUTOEND bit in I2C_CTL1 can be set to generate a STOP signal automatically. When AUTOEND is 0, the TC bit in I2C_STAT register will be set and the SCL is stretched. In this case, the master can generate a STOP signalby setting the STOP bit in the I2C_CTL1 register. Or generate a RESTART signal to start a new transfer. The TC bit is cleared when the START / STOP bit is set.

Figure 26-20. Programming model for master receiving (N<=255)

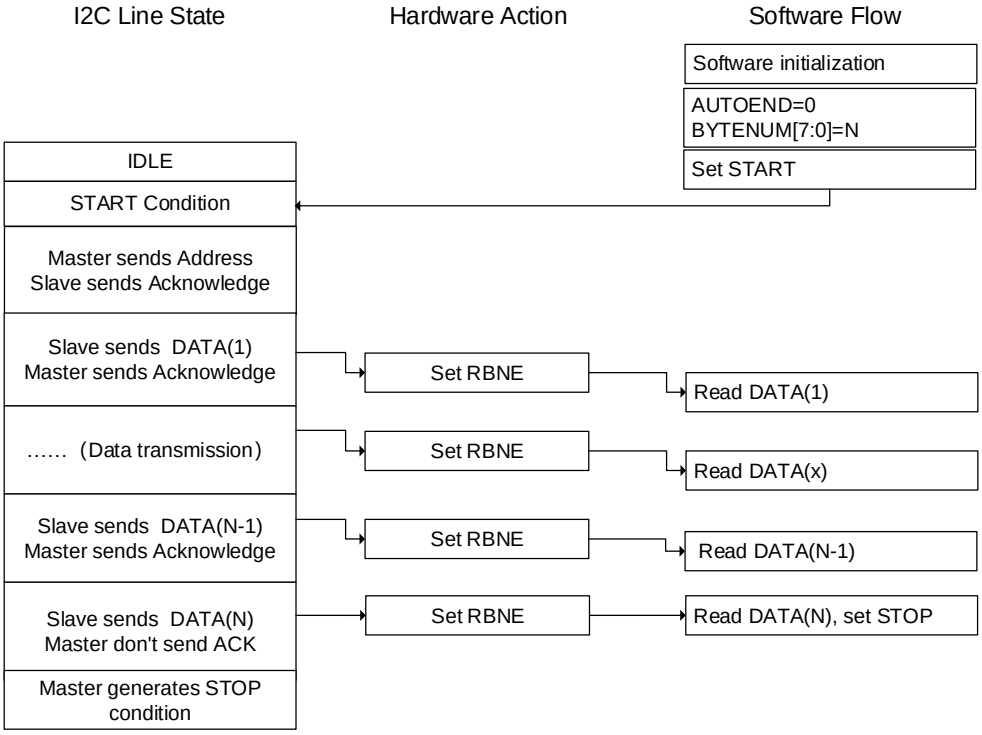

Figure 26-21. Programming model for master receiving (N>255)

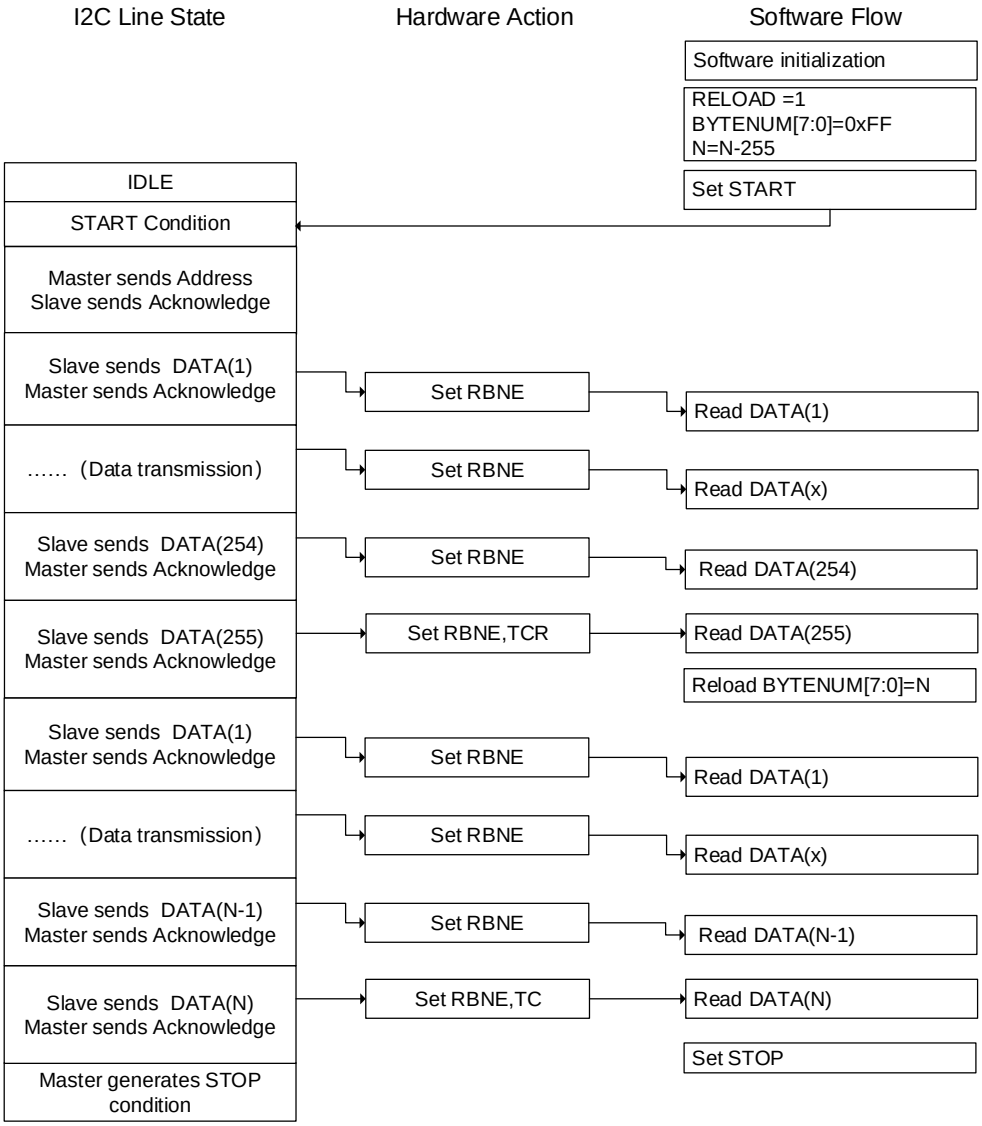

26.3.9. SMBus support

The System Management Bus (abbreviated to SMBus or SMB) is a single-ended simple two-wire bus for the purpose of lightweight communication. Most commonly it is found in computer motherboards for communication with power source for ON/OFF instructions. It is derived from I2C for communication with low-bandwidth devices on a motherboard, especially power related chips such as a laptop's rechargeable battery subsystem (see Smart Battery Data).

SMBus protocol

Each message transaction on SMBus follows the format of one of the defined SMBus protocols. The SMBus protocols are a subset of the data transfer formats defined in the I2C specifications. I2C devices that can be accessed through one of the SMBus protocols are compatible with the SMBus specifications. I2C devices that do not adhere to these protocols cannot be accessed by standard methods as defined in the SMBus and Advanced

Configuration and Power Management Interface (abbreviated to ACPI) specifications.

Address resolution protocol

The SMBus uses I2C hardware and I2C hardware addressing, but adds second-level software for building special systems. Additionally, its specifications include an Address Resolution Protocol that can make dynamic address allocations. Dynamic reconfiguration of the hardware and software allow bus devices to be 'hot-plugged' and used immediately, without restarting the system. The devices are recognized automatically and assigned unique addresses. This advantage results in a plug-and-play user interface. In this protocol there is a very useful distinction between a system host and all the other devices in the system, that is the host provides address assignment function.

SMBus slave byte control

The slave byte control of SMBus receiver is the same as I2C. It allows the ACK control of each byte. Slave byte control mode is enabled by setting SBCTL bit in I2C_CTL0 register.

Host notify protocol

When the SMBHAEN bit in the I2C_CTL0 register is set, the SMBus supports the host notify protocol. In this protocol, the device acts as a master and the host as a slave, and the host will acknowledge the SMBus host address.

Time-out feature

SMBus has a time-out feature which resets devices if a communication takes too long. This explains the minimum clock frequency of 10 kHz to prevent locking up the bus. I2C can be a 'DC' bus, meaning that a slave device stretches the master clock when performing some routine while the master is accessing it. This will notify to the master that the slave is busy but does not want to lose the communication. The slave device will allow continuation after its task is completed. There is no limit in the I2C bus protocol as to how long this delay can be, whereas for a SMBus system, it would be limited to 25~35ms. SMBus protocol just assumes that if something takes too long, then it means that there is a problem on the bus and that all devices must reset in order to clear this mode. Slave devices are not allowed to hold the clock low too long.

The timeout detection can be enabled by setting TOEN and EXTOEN bits in the I2C_TIMEOUT register. The timer must be configured to guarantee that the timeout detected before the maximum time given in the SMBus specification.

The value programmed in BUSTOA[11:0] is used to check the $t_{TIMEOUT}$ parameter. To detect the SCL low level timeout, the TOIDLE bit must be 0. And the timer can be enabled by setting the TOEN bit in the I2C_TIMEOUT register, after the TOEN bit is set, the BUSTOA[11:0] and the TOIDLE bit cannot be changed. If the low level time of SCL is greater than (BUSTOA+1)*2048*t_{I2CCLK}, the TIMEOUT flag will be set in I2C_STAT register.

The BUSTOB[11:0] is used to check the $t_{LOW:SEXT}$ of the slave and the $t_{LOW:MEXT}$ of the master. The timer can be enabled by setting the EXTOEN bit in the I2C_TIMEOUT register, after the EXTOEN bit is set, the BUSTOB[11:0] cannot be changed. If the SCL stretching time of the SMBus peripheral is greater than (BUSTOB+1)*2048*t_{I2CCLK} and within the timeout range described in the bus idle detection section, the TIMEOUT bit in the I2C_STAT register will be set.

Packet error checking

There is a CRC-8 calculator in I2C block to perform Packet Error Checking for I2C data. A PEC (packet error code) byte is appended at the end of each transfer. The byte is calculated as CRC-8 checksum, calculated over the entire message including the address and read/write bit. The polynomial used is x^8+x^2+x+1 (the CRC-8-ATM HEC algorithm, initialized to zero).

When I2C is disabled, the PEC can be enabled by setting the PECEN bit in I2C_CTL0 register.Since the PEC transmission is managed by BYTENUM[7:0] in I2C_CTL1 register, SBCTL bit must be set when act as a slave. When PECTRANS is set and the RELOAD bit is cleared, PEC is transmitted after the BYTENUM[7:0]-1 data byte. The PECTRANS has no effect if RELOAD is set.

SMBus alert

The SMBus has an extra optional shared interrupt signal called SMBALERT# which can be used by slaves to tell the host to ask its slaves about events of interest. The host processes the interrupt and accesses all SMBALERT# devices through the Alert Response Address at the same time. If the SMBALERT# is pulled low by the devices, the devices will acknowledge the Alert Response Address. When SMBHAEN is 0, it is configured as a slave device, the SMBA pin will be pulled low by setting the SMBALTEN bit in the I2C_CTL0 register. Meanwhile the Alert Response Address is enabled. When SMBHAEN is 1, it is configured as a host, and the SMBALTEN is 1, as soon as a falling edge is detected on the SMBA pin, the SMBALT flag will be set in the I2C_STAT register. If the ERRIE bit is set in the I2C_CTL0 register, an interrupt will be generated. When SMBALTEN is 0, the level of ALERT line is considered high even if the SMBA pin is low. The SMBA pin can be used as a standard GPIO if SMBALTEN is 0.

Bus idle detection

If the master detects that the high level duration of the clock and data signals is greater than $t_{HIGH,MAX}$, the bus can be considered idle.

This timing parameter includes the case of a master that has been dynamically added to the bus and may not have detected a state transition on a SMBCLK or SMBDAT lines. In this case, in order to ensure that there is no ongoing transmission, the master must wait long enough.

The BUSTOA[11:0] bits must be programmed with the timer reload value to enable the t_{IDLE}

check in order to obtain the t_{IDLE} parameter. To detect SCL and SDA high level timeouts, the TOIDLE bit must be set. Then setting the TOEN bit in the I2C_TIMEOUT register to enable the timer, after the TOEN bit is set, the BUSTOA[11:0] bit and the TOIDLE bit cannot be changed. If the high level time of both SCL and SDA is greater than (BUSTOA+1)*4*t_{I2CCLK}, the TIMEOUT flag will be set in the I2C_STAT register.

SMBus slave mode

The SMBus receiver must be able to NACK each command or data it receives. For ACK control in slave mode, slave byte control mode can be enabled by setting SBCTL bit in I2C_CTL0 register.

SMBus-specific addresses should be enabled when needed. The SMBus Device Default address (0b1100 001) is enabled by setting the SMBDAEN bit in the I2C_CTL0 register. The SMBus Host address (0b0001 000) is enabled by setting the SMBHAEN bit in the I2C_CTL0 register. The Alert Response Address (0b0001 100) is enabled by setting the SMBALTEN bit in the I2C_CTL0 register.

26.3.10. SMBus mode

SMBus master transmitter and slave receiver

The PEC in SMBus master mode can be transmitted by setting the PECTRANS bit before setting the START bit, and the number of bytes in the BYTENUM[7:0] field must be configured. In this case, the total number of transmissions when TI interrupt occur is BYTENUM-1. So if BYTENUM=0x1 and PECTRANS bit is set, the data in I2C_PEC register will be transmitted automatically. If AUTOEND is 1 the SMBus master will send the STOP signal after the PEC byte automatically. If the AUTOEND is 0, the SMBus master can send a RESTART signal after the PEC. The PEC byte in I2C_PEC register will be sent after BYTENUM-1 bytes, and the TC flag will be set after PEC is sent, then the SCL line is stretched low. The RESTART must be set in the TC interrupt routine.

When used as slave receiver, in order to allow PEC checking at the end of the number of bytes transmitted, SBCTL must be set. To configure ack control for each byte, the RELOAD must be set to enable the RELOAD mode. In order to check the PEC byte, it is necessary to clear the RELOAD bit and set PECTRANS bit. After receiving BYTENUM-1 data, the next received byte will be compared with the data in the I2C_PEC register. If the PEC values does not match, the NACK is automatically generated. If the PEC values matches, the ACK is automatically generated, regardless of the NACKEN bit value. When PEC byte is received, it is also copied into the I2C_RDATA register, and RBNE flag will be set. If the ERRIE bit in I2C_CTL0 register is 1, when PEC value does not match, the PECERR flag will be set and the interrupt will be generated. If ACK control is not required, then PECTRANS can be set to 1 and BYTENUM can be programmed according to the number of bytes to be received.

Note: After the RELOAD bit is set, the PECTRANS cannot be changed.

Figure 26-22. SMBus master transmitter and slave receiver communication flow

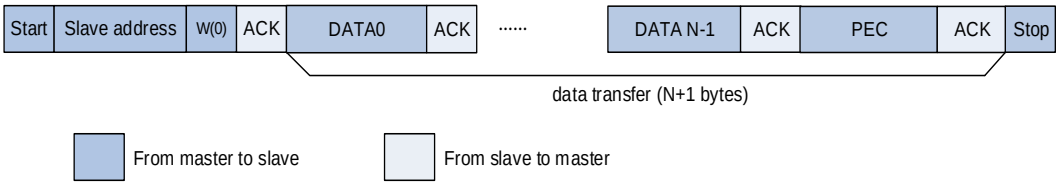

SMBus master receiver and slave transmitter

If the SMBus master is required to receive PEC at the end of bytes transfer, automatic end mode can be enabled. Before sending a START condition on the bus, PECTRANS bit must be set and slave addresses must be programmed. After receiving BYTENUM-1 data, the next received byte will be compared with the data in the I2C_PEC register automatically. A NACK is respond to the PEC byte before STOP condition.

If the SMBus master receiver is required to generate a RESTART signal after receiving PEC byte, automatic end mode must be disabled. Before sending a START signal to the bus, PECTRANS bit must be set and slave addresses must be programmed. After receiving BYTENUM-1 data, the next received byte will be compared with the data in the I2C_PEC register automatically. The TC flag will be set after PEC is sent, then the SCL line is stretched low. The RESTART can be set in the TC interrupt routine.

When used as slave transmitter, in order to allow PEC transmission at the end of BYTENUM[7:0] bytes, SBCTL must be set. If PECTRANS bit is set, the number of bytes in BYTENUM[7:0] contains PEC byte. In this case, if the number of bytes requested by the master is greater than BYTENUM-1, the total number of TI interrupts will be BYTENUM-1, and the data in the I2C_PEC register will be transmitted automatically.

Note: After the RELOAD bit is set, the PECTRANS cannot be changed.

Figure 26-23. SMBus master receiver and slave transmitter communication flow

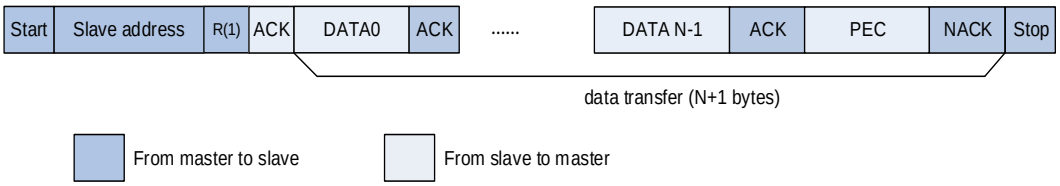

26.3.11. Wakeup from power saving mode

When the address of I2C matches correctly, it can wake up from MCU sleep mode and Deep-sleep mode (APB clock is off). In order to wake up from power saving mode, WUEN bit must be set in the I2C_CTL0 register and the IRC64M must be selected as the clock source for I2CCLK. During power saving mode, the IRC64M is switched off. The I2C interface switches the IRC64M on, and stretches SCL low until IRC64M is woken up when a START is detected. Then the IRC64M is used as the clock of I2C to receive the address. When address matching is detected, I2C stretches SCL during MCU wake-up. The SCL is released until the software

clears the ADDSEND flag and the transmission proceeds normally. If the detected address does not match, IRC64M will be closed again and the MCU will not be wake up.

Only an address match interrupt (ADDMIE = 1) can wakeup the MCU. If the clock source of I2C is the system clock, or WUEN = 0, IRC64M will not switched on after receiving start signal. When wakeup from power saving mode is enabled, the digital filter must be disabled and the SS bit in I2C_CTL0 must be cleared. Before entering power saving mode (I2CEN = 0), the I2C peripheral must be disabled if wakeup from power saving mode is disabled (WUEN = 0).

26.3.12. Use DMA for data transfer

As is shown in I2C slave mode and I2C master mode, each time TI or RBNE is asserted, software should write or read a byte, this may cause CPU's high overload. The DMA controller can be used to process TI and RBNE flag: each time TI or RBNE is asserted, DMA controller does a read or write operation automatically.

The DMA transmission request is enabled by setting the DENT bit in I2C_CTL0 register. The DMA reception request is enabled by setting the DENR bit in I2C_CTL0 register. In master mode, the slave address, transmission direction, number of bytes and START bit are programmed by software. The DMA must be initialized before setting the START bit. The number of bytes to be transferred is configured in the BYTENUM[7:0] in I2C_CTL1 register. In slave mode, the DMA must be initialized before the address match event or in the ADDSEND interrupt routine, before clearing the ADDSEND flag.

26.3.13. I2C error and interrupts

The I2C error flags are listed in ***Table 26-4. I2C error flags***.

Table 26-4. I2C error flags

I2C Error Name	Description
BERR	Bus error
LOSTARB	Arbitration lost
OUERR	Overrun / Underrun flag
PECERR	CRC value doesn't match
TIMEOUT	Bus timeout in SMBus mode
SMBALT	SMBus Alert

The I2C interrupt events and flags are listed in ***Table 26-5. I2C interrupt events***.

Table 26-5. I2C interrupt events

Interrupt event	Event flag	Enable control bit
I2C_RDATA is not empty during receiving	RBNE	RBNEIE
Transmit interrupt	TI	TIE
STOP siganl detected in slave mode	STPDET	STPDETIE
Transfer complete reload	TCR	TCIE
Transfer complete	TC	

Interrupt event	Event flag	Enable control bit
Address match	ADDSEND	ADDMIE
Not acknowledge received	NACK	NACKIE
Bus error	BERR	ERRIE
Arbitration Lost	LOSTARB	
Overrun/Underrun error	OUERR	
PEC error	PECERR	
Timeout error	TIMEOUT	
SMBus Alert	SMBALT	

26.3.14. I2C debug mode

When the microcontroller enters the debug mode (Cortex®-M7 core halted), the SMBus timeout either continues to work normally or stops, depending on the I2Cx_HOLD configuration bits in the DBG module.

26.4. Register definition

I2C0 base address: 0x4000 5400

I2C1 base address: 0x4000 5800

I2C2 base address: 0x4000 C000

I2C3 base address: 0x4000 5C00

26.4.1. Control register 0 (I2C_CTL0)

Address offset: 0x00
Reset value: 0x0000 0000

This register has to be accessed by word (32-bit).

31	30	29	28	27	26	25	24	23	22	21	20	19	18	17	16
Reserved								PECEN	SMBALTEN	SMBDAEN	SMBHAEN	GCEN	WUEN	SS	SBCTL
								rw	rw	rw	rw	rw	rw	rw	rw

15	14	13	12	11	10	9	8	7	6	5	4	3	2	1	0
DENR	DENT	Reserved	ANOFF	DNF[3:0]				ERRIE	TCIE	STPDETIE	NACKIE	ADDMIE	RBNEIE	TIE	I2CEN
rw	rw		rw	rw				rw	rw	rw	rw	rw	rw	rw	rw

Bits	Fields	Descriptions
31:24	Reserved	Must be kept at reset value.
23	PECEN	PEC Calculation Switch 0: PEC Calculation off 1: PEC Calculation on
22	SMBALTEN	SMBus Alert enable 0: SMBA pin is not pulled down (device mode) or SMBus Alert pin SMBA is disabled (host mode) 1: SMBA pin is pulled down (device mode) or SMBus Alert pin SMBA is enabled (host mode)
21	SMBDAEN	SMBus device default address enable 0: Device default address is disabled, the default address 0b1100001x will be not acknowledged. 1: Device default address is enabled, the default address 0b1100001x will be acknowledged.
20	SMBHAEN	SMBus Host address enable 0: Host address is disabled, address 0b0001000x will be not acknowledged.

		1: Host address is enabled, address 0b0001000x will be acknowledged.
19	GCEN	Whether or not to response to a General Call (0x00) 0: Slave won't response to a General Call 1: Slave will response to a General Call
18	WUEN	Wakeup from power saving mode enable This bit is cleared when mcu wakeup from power saving mode. 0: Wakeup from power saving mode disable. 1: Wakeup from power saving mode enable. **Note:** WUEN can be set only when DNF[3:0] = 0000.
17	SS	Whether to stretch SCL low when data is not ready in slave mode. This bit is set and cleared by software. 0: SCL Stretching is enabled 1: SCL Stretching is disabled **Note:** When in master mode, this bit must be 0. This bit can be modified when I2CEN = 0.
16	SBCTL	Slave byte control This bit is used to enable hardware byte control in slave mode. 0: Slave byte control is disabled 1: Slave byte control is enabled
15	DENR	DMA enable for reception 0: DMA is disabled for reception 1: DMA is enabled for reception
14	DENT	DMA enable for transmission 0: DMA is disabled for transmission 1: DMA is enabled for transmission
13	Reserved	Must be kept at reset value.
12	ANOFF	Analog noise filter disable 0: Analog noise filter is enabled 1: Analog noise filter is disabled **Note:** This bit can only be programmed when the I2C is disabled (I2CEN = 0).
11:8	DNF[3:0]	Digital noise filter 0000: Digital filter is disabled 0001: Digital filter is enabled and filter spikes with a length of up to 1 t_{I2CCLK} ... 1111: Digital filter is enabled and filter spikes with a length of up to15 t_{I2CCLK} These bits can only be modified when the I2C is disabled (I2CEN = 0).
7	ERRIE	Error interrupt enable 0: Error interrupt disabled 1: Error interrupt enabled. When BERR, LOSTARB, OUERR, PECERR, TIMEOUT

		or SMBALT bit is set, an interrupt will be generated.
6	TCIE	Transfer complete interrupt enable 0: Transfer complete interrupt is disabled 1: Transfer complete interrupt is enabled
5	STPDETIE	Stop detection interrupt enable 0: Stop detection (STPDET) interrupt is disabled 1: Stop detection (STPDET) interrupt is enabled
4	NACKIE	Not acknowledge received interrupt enable 0: Not acknowledge (NACK) received interrupt is disabled 1: Not acknowledge (NACK) received interrupt is enabled
3	ADDMIE	Address match interrupt enable in slave mode 0: Address match (ADDSEND) interrupt is disabled 1: Address match (ADDSEND) interrupt is enabled
2	RBNEIE	Receive interrupt enable 0: Receive (RBNE) interrupt is disabled 1: Receive (RBNE) interrupt is enabled
1	TIE	Transmit interrupt enable 0: Transmit (TI) interrupt is disabled 1: Transmit (TI) interrupt is enabled
0	I2CEN	I2C peripheral enable 0: I2C is disabled 1: I2C is enabled

26.4.2. Control register 1 (I2C_CTL1)

Address offset: 0x04

Reset value: 0x0000 0000

This register has to be accessed by word (32-bit).

31	30	29	28	27	26	25	24	23	22	21	20	19	18	17	16
Reserved					PECTRANS	AUTOEND	RELOAD	BYTENUM[7:0]							
					rw	rw	rw	rw							

15	14	13	12	11	10	9	8	7	6	5	4	3	2	1	0
NACKEN	STOP	START	HEAD10R	ADD10EN	TRDIR	SADDRESS[9:0]									
rw	rw	rw	rw	rw	rw	rw									

Bits	Fields	Descriptions
31:27	Reserved	Must be kept at reset value.

26	PECTRANS	PEC Transfer Set by software. Cleared by hardware in the following cases: When PEC byte is transferred or ADDSEND bit is set or STOP signal is detected or I2CEN=0. 0: Don't transfer PEC value 1: Transfer PEC **Note:** This bit has no effect when RELOAD=1, or SBCTL=0 in slave mode.
25	AUTOEND	Automatic end mode in master mode 0: TC bit is set when the transfer of BYTENUM[7:0] bytes is completed. 1: a STOP signal is sent automatically when the transfer of BYTENUM[7:0] bytes is completed. **Note:** This bit works only when RELOAD=0. This bit is set and cleared by software.
24	RELOAD	Reload mode 0: After the data of BYTENUM[7:0] bytes transfer, the transfer is completed. 1: After data of BYTENUM[7:0] bytes transfer, the transfer is not completed and the new BYTENUM[7:0] will be reloaded. Every time when the BYTENUM[7:0] bytes have been transferred, the TCR bit in I2C_STAT register will be set. This bit is set and cleared by software.
23:16	BYTENUM[7:0]	Number of bytes to be transferred These bits are programmed with the number of bytes to be transferred. When SBCTL=0, these bits have no effect. **Note:** These bits should not be modified when the START bit is set.
15	NACKEN	Generate NACK in slave mode 0: an ACK is sent after receiving a new byte. 1: a NACK is sent after receiving a new byte. **Note:** The bit can be set by software, and cleared by hardware when the NACK is sent, or when a STOP signal is detected or ADDSEND is set, or when I2CEN=0. When PEC is enabled, whether to send an ACK or a NACK is not depend on the NACKEN bit. When SS=1, and the OUERR bit is set, the value of NACKEN is ignored and a NACK will be sent.
14	STOP	Generate a STOP signal on I2C bus This bit is set by software and cleared by hardware when I2CEN=0 or STOP condition is detected. 0: STOP will not be sent 1: STOP will be sent
13	START	Generate a START condition on I2C bus This bit is set by software and cleared by hardware after the address is sent. When the arbitration is lost, or a timeout error occurred, or I2CEN=0, this bit can also be cleared by hardware. It can be cleared by software by setting the ADDSENDC bit in I2C_STATC register.

		0: START will not be sent 1: START will be sent
12	HEAD10R	10-bit address header executes read direction only in master receive mode 0: The 10 bit master receive address sequence is START + header of 10-bit address (write) + slave address byte 2 + RESTART + header of 10-bit address (read). 1: The 10 bit master receive address sequence is RESTART + header of 10-bit address (read). **Note:** When the START bit is set, this bit can not be changed.
11	ADD10EN	10-bit addressing mode enable in master mode 0: 7-bit addressing in master mode 1: 10-bit addressing in master mode **Note:** When the START bit is set, this bit can not be modified.
10	TRDIR	Transfer direction in master mode 0: Master transmit 1: Master receive **Note:** When the START bit is set, this bit can not be modified.
9:0	SADDRESS[9:0]	Slave address to be sent SADDRESS[9:8]: Slave address bit 9:8 If ADD10EN = 0, these bits have no effect. If ADD10EN = 1, these bits should be written with bits 9:8 of the slave address to be sent. SADDRESS[7:1]: Slave address bit 7:1 If ADD10EN = 0, these bits should be written with the 7-bit slave address to be sent. If ADD10EN = 1, these bits should be written with bits 7:1 of the slave address to be sent. SADDRESS0: Slave address bit 0 If ADD10EN = 0, this bit has no effect. If ADD10EN = 1, this bit should be written with bit 0 of the slave address to be sent **Note:** When the START bit is set, the bit filed can not be modified.

26.4.3. Slave address register 0 (I2C_SADDR0)

Address offset: 0x08

Reset value: 0x0000 0000

This register has to be accessed by word (32-bit).

31	30	29	28	27	26	25	24	23	22	21	20	19	18	17	16
Reserved															

15	14	13	12	11	10	9	8	7	6	5	4	3	2	1	0
ADDRESSEN	Reserved				ADDFORMAT	ADDRESS[9:8]		ADDRESS[7:1]							ADDRESS0

rw rw rw rw rw

Bits	Fields	Descriptions
31:16	Reserved	Must be kept at reset value.
15	ADDRESSEN	I2C address enable 0: I2C address disable. 1: I2C address enable.
14:11	Reserved	Must be kept at reset value.
10	ADDFORMAT	Address mode for the I2C slave 0: 7-bit address 1: 10-bit address **Note:** When ADDRESSEN is set, this bit should not be written.
9:8	ADDRESS[9:8]	Highest two bits of a 10-bit address **Note:** When ADDRESSEN is set, this bit should not be written.
7:1	ADDRESS[7:1]	7-bit address or bits 7:1 of a 10-bit address **Note:** When ADDRESSEN is set, this bit should not be written.
0	ADDRESS0	Bit 0 of a 10-bit address **Note:** When ADDRESSEN is set, this bit should not be written.

26.4.4. Slave address register 1 (I2C_SADDR1)

Address offset: 0x0C

Reset value: 0x0000 0000

This register has to be accessed by word (32-bit).

31	30	29	28	27	26	25	24	23	22	21	20	19	18	17	16
Reserved															

15	14	13	12	11	10	9	8	7	6	5	4	3	2	1	0
ADDRESS2EN	Reserved				ADDMSK2[2:0]			ADDRESS2[7:1]							Reserved
rw						rw					rw				

Bits	Fields	Descriptions
31:16	Reserved	Must be kept at reset value.
15	ADDRESS2EN	Second I2C address enable 0: Second I2C address disable. 1: Second I2C address enable.
14:11	Reserved	Must be kept at reset value.

10:8	ADDMSK2[2:0]	ADDRESS2[7:1] mask Defines which bits of ADDRESS2[7:1] are compared with an incoming address byte, and which bits are masked (don't care). 000: No mask, all the bits must be compared. n(001~110): ADDRESS2[n:0] is masked. Only ADDRESS2[7:n+1] are compared. 111: ADDRESS2[7:1] are masked. All 7-bit received addresses are acknowledged except the reserved address (0b0000xxx and 0b1111xxx). **Note:** When ADDRESS2EN is set, these bits should not be written. If ADDMSK2 is not equal to 0, the reserved I2C addresses (0b0000xxx and 0b1111xxx) are not acknowledged even if all the bits are matched.
7:1	ADDRESS2[7:1]	Second I2C address for the slave **Note:** When ADDRESS2EN is set, these bits should not be written.
0	Reserved	Must be kept at reset value.

26.4.5. Timing register (I2C_TIMING)

Address offset: 0x10

Reset value: 0x0000 0000

This register has to be accessed by word (32-bit).

31	30	29	28	27	26	25	24	23	22	21	20	19	18	17	16
PSC[3:0]				Reserved				SCLDELY[3:0]				SDADELY[3:0]			
rw								rw				rw			

15	14	13	12	11	10	9	8	7	6	5	4	3	2	1	0
SCLH[7:0]								SCLL[7:0]							
rw								rw							

Bits	Fields	Descriptions
31:28	PSC[3:0]	Timing prescaler In order to generate the clock period t_{PSC} used for data setup and data hold counters, these bits are used to configure the prescaler for I2CCLK. The t_{PSC} is also used for SCL high and low level counters. t_{PSC}=(PSC+1)*t_{I2CCLK}
27:24	Reserved	Must be kept at reset value.
23:20	SCLDELY[3:0]	Data setup time A delay $t_{SCLDELY}$ between SDA edge and SCL rising edge can be generated by configuring these bits. And during $t_{SCLDELY}$, the SCL line is stretched low in master mode and in slave mode when SS = 0. $t_{SCLDELY}$=(SCLDELY+1)*t_{PSC}
19:16	SDADELY[3:0]	Data hold time A delay $t_{SDADELY}$ between SCL falling edge and SDA edge can be generated by

		configuring these bits. And during $t_{SDADELY}$, the SCL line is stretched low in master mode and in slave mode when SS = 0. $t_{SDADELY}$= SDADELY x t_{PSC}
15:8	SCLH[7:0]	SCL high period SCL high period can be generated by configuring these bits. t_{SCLH}=(SCLH+1)*t_{PSC} **Note:** These bits can only be used in master mode.
7:0	SCLL[7:0]	SCL low period SCL low period can be generated by configuring these bits. t_{SCLL}=(SCLL+1)*t_{PSC} **Note:** These bits can only be used in master mode.

26.4.6. Timeout register (I2C_TIMEOUT)

Address offset: 0x14

Reset value: 0x0000 0000

This register has to be accessed by word (32-bit).

31	30	29	28	27	26	25	24	23	22	21	20	19	18	17	16
EXTOEN	Reserved			BUSTOB[11:0]											
rw				rw											

15	14	13	12	11	10	9	8	7	6	5	4	3	2	1	0
TOEN	Reserved		TOIDLE	BUSTOA[11:0]											
rw			rw	rw											

Bits	Fields	Descriptions
31	EXTOEN	Extended clock timeout detection enable When a cumulative SCL stretch time is greater than $t_{LOW:EXT}$, a timeout error will be occurred. $t_{LOW:EXT}$ = (BUSTOB +1) x 2048 x t_{I2CCLK}. 0: Extended clock timeout detection is disabled. 1: Extended clock timeout detection is enabled.
30:28	Reserved	Must be kept at reset value.
27:16	BUSTOB[11:0]	Bus timeout B Configure the cumulative clock extension timeout. In master mode, the master cumulative clock low extend time $t_{LOW:MEXT}$ is detected. In slave mode, the slave cumulative clock low extend time $t_{LOW:SEXT}$ is detected. $t_{LOW:EXT}$=(BUSTOB+1)*2048*t_{I2CCLK}. **Note:** These bits can be modified only when EXTOEN =0.
15	TOEN	Clock timeout detection enable If the SCL stretch time greater than $t_{TIMEOUT}$ when TOIDLE =0 or high for more

		than t_{IDLE} when TOIDLE =1, a timeout error is detected. 0: SCL timeout detection is disabled 1: SCL timeout detection is enabled
14:13	Reserved	Must be kept at reset value.
12	TOIDLE	Idle clock timeout detection 0: BUSTOA is used to detect SCL low timeout 1: BUSTOA is used to detect both SCL and SDA high timeout when the bus is idle **Note:** This bit can be written only when TOEN =0.
11:0	BUSTOA[11:0]	Bus timeout A When TOIDLE = 0, $t_{TIMEOUT}$=(BUSTOA+1)*2048*t_{I2CCLK}. When TOIDLE = 1, t_{IDLE}=(BUSTOA+1)*4*t_{I2CCLK}. **Note:** These bits can be written only when TOEN =0.

26.4.7. Status register (I2C_STAT)

Address offset: 0x18

Reset value: 0x0000 0001

This register has to be accessed by word (32-bit).

31	30	29	28	27	26	25	24	23	22	21	20	19	18	17	16
Reserved								READDR[6:0]							TR
											r				r

15	14	13	12	11	10	9	8	7	6	5	4	3	2	1	0
I2CBSY	Reserved	SMBALT	TIMEOUT	PECERR	OUERR	LOSTARB	BERR	TCR	TC	STPDET	NACK	ADDSEND	RBNE	TI	TBE
r		r	r	r	r	r	r	r	r	r	r	r	r	rw	rw

Bits	Fields	Descriptions
31:24	Reserved	Must be kept at reset value.
23:17	READDR[6:0]	Received match address in slave mode When the ADDSEND bit is set, these bits store the matched address. In the case of a 10-bit address, READDR[6:0] stores the header of the 10-bit address followed by the 2 MSBs of the address.
16	TR	Whether the I2C is a transmitter or a receiver in slave mode This bit is updated when the ADDSEND bit is set. 0: Receiver 1: Transmitter
15	I2CBSY	Busy flag This bit is set by hardware when a START signal is detected and cleared by hardware after a STOP signal. When I2CEN=0, this bit is also cleared by hardware. 0: No I2C communication.

		1: I2C communication active.
14	Reserved	Must be kept at reset value.
13	SMBALT	SMBus Alert When SMBHAEN=1, SMBALTEN=1, and a SMBALERT event (falling edge) is detected on SMBA pin, this bit will be set by hardware. It is cleared by software by setting the SMBALTC bit. This bit is cleared by hardware when I2CEN=0. 0: SMBALERT event is not detected on SMBA pin 1: SMBALERT event is detected on SMBA pin
12	TIMEOUT	TIMEOUT flag. When a timeout or extended clock timeout occurred, this bit will be set. It is cleared by software by setting the TIMEOUTC bit and cleared by hardware when I2CEN=0. 0: no timeout or extended clock timeout occur 1: a timeout or extended clock timeout occur
11	PECERR	PEC error This flag is set by hardware when the received PEC does not match with the content of I2C_PEC register. Then a NACK is automatically sent. It is cleared by software by setting the PECERRC bit and cleared by hardware when I2CEN=0. 0: Received PEC and content of I2C_PEC match 1: Received PEC and content of I2C_PEC don't match, I2C will send NACK regardless of NACKEN bit.
10	OUERR	Overrun/Underrun error in slave mode In slave mode with SS=1, when an overrun/underrun error occurs, this bit will be set by hardware. It is cleared by software by setting the OUERRC bit and cleared by hardware when I2CEN=0. 0: No overrun or underrun occurs 1: Overrun or underrun occurs
9	LOSTARB	Arbitration Lost It is cleared by software by setting the LOSTARBC bit and cleared by hardware when I2CEN=0. 0: No arbitration lost. 1: Arbitration lost occurs and the I2C block changes back to slave mode.
8	BERR	Bus error When an unexpected START or STOP signal on I2C bus is detected, a bus error occurs and this bit will be set. It is cleared by software by setting BERRC bit and cleared by hardware when I2CEN=0. 0: No bus error 1: A bus error detected
7	TCR	Transfer complete reload This bit is set by hardware when RELOAD=1 and data of BYTENUM[7:0] bytes have been transferred. It is cleared by software when BYTENUM[7:0] is written to a non-

		zero value. 0: When RELOAD=1, transfer of BYTENUM[7:0] bytes is not completed 1: When RELOAD=1, transfer of BYTENUM[7:0] bytes is completed
6	TC	Transfer complete in master mode This bit is set by hardware when RELOAD=0, AUTOEND=0 and data of BYTENUM[7:0] bytes have been transferred. It is cleared by software when START bit or STOP bit is set. 0: Transfer of BYTENUM[7:0] bytes is not completed 1: Transfer of BYTENUM[7:0] bytes is completed
5	STPDET	STOP signal detected in slave mode This flag is set by hardware when a STOP signal is detected on the bus. It is cleared by software by setting STPDETC bit and cleared by hardware when I2CEN=0. 0: STOP signal is not detected. 1: STOP signal is detected.
4	NACK	Not Acknowledge flag This flag is set by hardware when a NACK is received. It is cleared by software by setting NACKC bit and cleared by hardware when I2CEN=0. 0: ACK is received. 1: NACK is received.
3	ADDSEND	Address received matches in slave mode. This bit is set by hardware when the received slave address matched with one of the enabled slave addresses. It is cleared by software by setting ADDSENDC bit and cleared by hardware when I2CEN=0. 0: Received address not matched 1: Received address matched
2	RBNE	I2C_RDATA is not empty during receiving This bit is set by hardware when the received data is shift into the I2C_RDATA register. It is cleared when I2C_RDATA is read. 0: I2C_RDATA is empty 1: I2C_RDATA is not empty, software can read
1	TI	Transmit interrupt This bit is set by hardware when the I2C_TDATA register is empty and the I2C is ready to transmit data. It is cleared when the next data to be sent is written in the I2C_TDATA register.When SS=1, this bit can be set by software, in order to generate a TI event (interrupt if TIE=1 or DMA request if DENT =1). 0: I2C_TDATA is not empty or the I2C is not ready to transmit data 1: I2C_TDATA is empty and the I2C is ready to transmit data
0	TBE	I2C_TDATA is empty during transmitting This bit is set by hardware when the I2C_TDATA register is empty. It is cleared when the next data to be sent is written in the I2C_TDATA register. This bit can be

set by software in order to empty the I2C_TDATA register.

0: I2C_TDATA is not empty

1: I2C_TDATA is empty

26.4.8. Status clear register (I2C_STATC)

Address offset: 0x1C

Reset value: 0x0000 0000

This register has to be accessed by word (32-bit).

31	30	29	28	27	26	25	24	23	22	21	20	19	18	17	16
Reserved															

15	14	13	12	11	10	9	8	7	6	5	4	3	2	1	0
Reserved		SMBALTC	TIMEOUTC	PECERRC	OUERRC	LOSTARBC	BERRC	Reserved		STPDETC	NACKC	ADDSENDC	Reserved		
		w	w	w	w	w	w			w	w	w			

Bits	Fields	Descriptions
31:14	Reserved	Must be kept at reset value.
13	SMBALTC	SMBus alert flag clear. Software can clear the SMBALT bit of I2C_STAT by writing 1 to this bit.
12	TIMEOUTC	TIMEOUT flag clear. Software can clear the TIMEOUT bit of I2C_STAT by writing 1 to this bit.
11	PECERRC	PEC error flag clear. Software can clear the PECERR bit of I2C_STAT by writing 1 to this bit.
10	OUERRC	Overrun/Underrun flag clear. Software can clear the OUERR bit of I2C_STAT by writing 1 to this bit.
9	LOSTARBC	Arbitration Lost flag clear. Software can clear the LOSTARB bit of I2C_STAT by writing 1 to this bit.
8	BERRC	Bus error flag clear. Software can clear the BERR bit of I2C_STAT by writing 1 to this bit.
7:6	Reservced	Must be kept at reset value.
5	STPDETC	STPDET flag clear Software can clear the STPDET bit of I2C_STAT by writing 1 to this bit.
4	NACKC	Not Acknowledge flag clear Software can clear the NACK bit of I2C_STAT by writing 1 to this bit.
3	ADDSENDC	ADDSEND flag clear

		Software can clear the ADDSEND bit of I2C_STAT by writing 1 to this bit.
2:0	Reserved	Must be kept at reset value.

26.4.9. PEC register (I2C_PEC)

Address offset: 0x20

Reset value: 0x0000 0000

This register has to be accessed by word (32-bit).

31	30	29	28	27	26	25	24	23	22	21	20	19	18	17	16
Reserved															

15	14	13	12	11	10	9	8	7	6	5	4	3	2	1	0
Reserved								PECV[7:0]							
											r				

Bits	Fields	Descriptions
31:8	Reserved	Must be kept at reset value.
7:0	PECV[7:0]	Packet Error Checking Value that calculated by hardware when PEC is enabled. PECV is cleared by hardware when I2CEN = 0.

26.4.10. Receive data register (I2C_RDATA)

Address offset: 0x24

Reset value: 0x0000 0000

This register can be accessed by word (32-bit).

31	30	29	28	27	26	25	24	23	22	21	20	19	18	17	16
Reserved															

15	14	13	12	11	10	9	8	7	6	5	4	3	2	1	0
Reserved								RDATA[7:0]							
											r				

Bits	Fields	Descriptions
31:8	Reserved	Must be kept at reset value.
7:0	RDATA[7:0]	Receive data value

26.4.11. Transmit data register (I2C_TDATA)

Address offset: 0x28

Reset value: 0x0000 0000

This register has to be accessed by word (32-bit).

31	30	29	28	27	26	25	24	23	22	21	20	19	18	17	16
Reserved															

15	14	13	12	11	10	9	8	7	6	5	4	3	2	1	0
Reserved								TDATA [7:0]							
											rw				

Bits	Fields	Descriptions
31:8	Reserved	Must be kept at reset value.
7:0	TDATA[7:0]	Transmit data value

26.4.12. Control register 2 (I2C_CTL2)

Address offset: 0x90

Reset value: 0x0000 0000

This register has to be accessed by word (32-bit).

31	30	29	28	27	26	25	24	23	22	21	20	19	18	17	16
Reserved															

15	14	13	12	11	10	9	8	7	6	5	4	3	2	1	0
ADDM[6:0]							Reserved								
			rw												

Bits	Fields	Descriptions
31:16	Reserved	Must be kept at reset value.
15:9	ADDM[6:0]	Defines which bits of ADDRESS[7:1] are compared with an incoming address byte, and which bits are ignored. Any bit set to 1 in ADDM[6:0] enables comparisons with the corresponding bit in ADDRESS[7:1]. Bits set to 0 are ignored (can be either 0 or 1 in the incoming address).
8:0	Reserved	Must be kept at reset value.

27. Serial peripheral interface/Inter-IC sound (SPI/I2S)

27.1. Overview

The SPI/I2S module can communicate with external devices using the SPI protocol or the I2S audio protocol.

The serial peripheral interface (SPI) provides a SPI protocol of data transmission and reception function in master or slave mode. Both full-duplex, half-duplex and simplex communication modes are supported, with hardware CRC calculation and checking. Quad-SPI master mode is also supported in SPI3 / 4.

The inter-IC sound (I2S) supports four audio standards: I2S Philips standard, MSB justified standard, LSB justified standard, and PCM standard. I2S works at either master or slave mode for transmission and reception.

27.2. Characteristics

27.2.1. SPI characteristics

- Master or slave operation with full-duplex, half-duplex or simplex mode.
- Separate transmit and receive 32-bit FIFO.
- Data frame size can be 4 to 32 bits.
- Bit order can be LSB or MSB.
- Software and hardware NSS management, MOSI and MISO pin switch alternate function.
- Hardware CRC calculation, transmission and checking.
- Transmission and reception using DMA.
- SPI TI mode supported.
- Multi-master or multi-slave mode function.
- Protect configurations and settings.
- Both the minimum delay between data frames and the minimum delay between NSS and data stream are adjustable.
- Master mode failures can trigger interrupts, overrun or underrun flags, and CRC error detection.
- Adjustable main device receiver sampling time.
- Configurable FIFO thresholds (data packing).
- In slave mode, the underrun condition is configurable.
- Quad-SPI configuration available in master mode (in SPI3 / 4).

27.2.2. I2S characteristics

- Master or slave operation for transmission/reception.

- Four I2S standards supported: Philips, MSB justified, LSB justified and PCM standard.
- Data length can be 16 bits, 24 bits or 32 bits.
- Channel length can be 16 bits or 32 bits.
- Bit order can be LSB or MSB.
- Error signals improve reliability: underrun, overrun, and frame errors.
- Transmission and reception use a 32 bits wide buffer.
- Audio sample frequency can be 8 kHz to 192 kHz using I2S clock divider.
- Programmable idle state clock polarity.
- Master clock (MCK) can be output.
- Transmission and reception support DMA function.
- Separate transmit and receive 32-bit FIFO.

27.3. SPI function overview

27.3.1. SPI block diagram

Figure 27-1. Block diagram of SPI

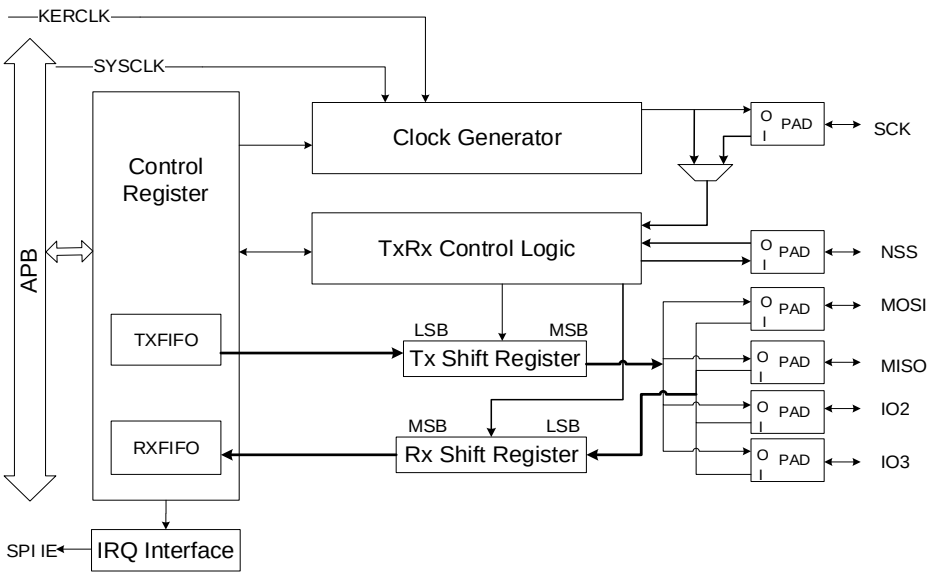

- SYSCLK: system clock, provided by APB bus.
- KERCLK: kernel clock, provided by RCU. It has an asynchronous relationship with the system clock.
- The clock signal frequency must be consistent with user conditions and data transmission speed to prevent data loss. (**NOTE**: suggest the frequency of SYSCLK is greater than or equal to KERCLK)
- The SCK signal of the SPI slave is provided by the SPI master.

27.3.2. SPI signal description

Normal configuration (Not Quad-SPI Mode)

Table 27-1. SPI signal description

Pin name	Direction	Description
SCK	I/O	Master: SPI clock output Slave: SPI clock input
MISO	I/O	Master: Data reception line Slave: Data transmission line Master with bidirectional mode: Not used Slave with bidirectional mode: Data transmission and reception line.
MOSI	I/O	Master: Data transmission line Slave: Data reception line Master with bidirectional mode: Data transmission and reception line. Slave with bidirectional mode: Not used
NSS	I/O	Software NSS mode: not used Master in hardware NSS mode: when NSSDRV = 1, it is NSS output, suitable for single master application; when NSSDRV = 0, it is NSS input, suitable for multi-master application. Slave in hardware NSS mode: NSS input, as a chip select signal for slave.

Quad-SPI configuration

SPI is in single wire mode by default and enters into Quad-SPI mode after QMOD bit in SPI_QCTL register is set (available in SPI3 / 4). Quad-SPI mode can only work in master mode.

The IO2 and IO3 pins can be driven high in normal Non-Quad-SPI mode by configuring IO23_DRV bit in SPI_QCTL register.

The SPI is connected to external devices through 6 pins in Quad-SPI mode:

Table 27-2. Quad-SPI signal description

Pin name	Direction	Description
SCK	O	SPI clock output
MOSI	I/O	Transmission / Reception data 0
MISO	I/O	Transmission / Reception data 1
IO2	I/O	Transmission / Reception data 2
IO3	I/O	Transmission / Reception data 3
NSS	O	NSS output

Serial data line switching configuration

SPI can exchange the functions of MOSI and MISO pins through the SWPMIO bit in the SPI_CFG1 register.

Table 27-3. MISO / MISO signal switching description

MODE	SWPMIO	MOSI	MISO
Master transmit	0	Transmission	-
	1	-	Transmission
Slave transmit	0	-	Transmission
	1	Transmission	-
Master receive	0	-	Reception
	1	Reception	-
Slave receive	0	Reception	-
	1	-	Reception
Master Full-duplex	0	Transmission	Reception
	1	Reception	Transmission
Slave Full-duplex	0	Reception	Transmission
	1	Transmission	Reception

27.3.3. SPI clock timing and data format

CKPL and CKPH bits in SPI_CFG1 register decide the timing of SPI clock and data signal. The CKPL bit decides the SCK level when idle and CKPH bit decides either first or second clock edge is a valid sampling edge. These bits take no effect in TI mode.

Figure 27-2. SPI timing diagram in normal mode

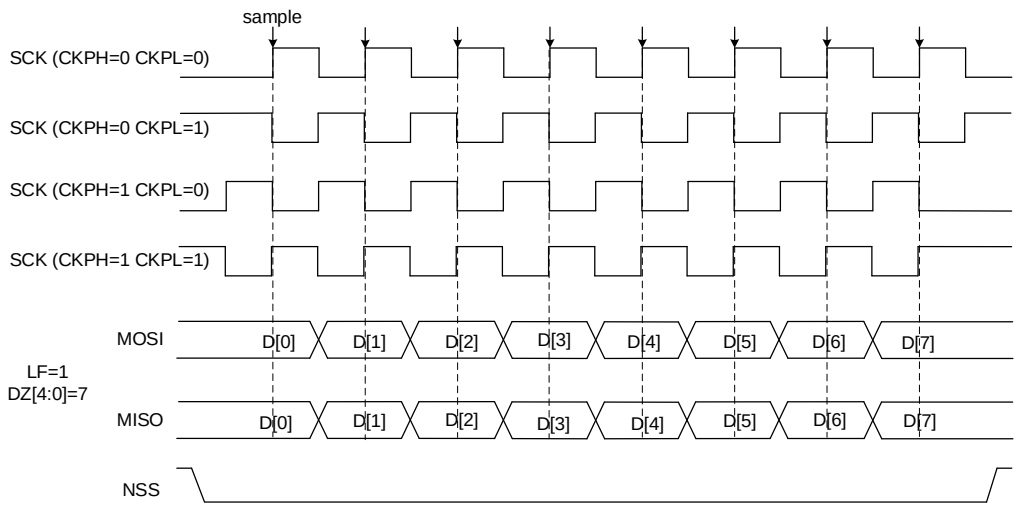

Figure 27-3. SPI3 / 4 timing diagram in Quad-SPI mode (CKPL = 1, CKPH = 1, LF = 0)

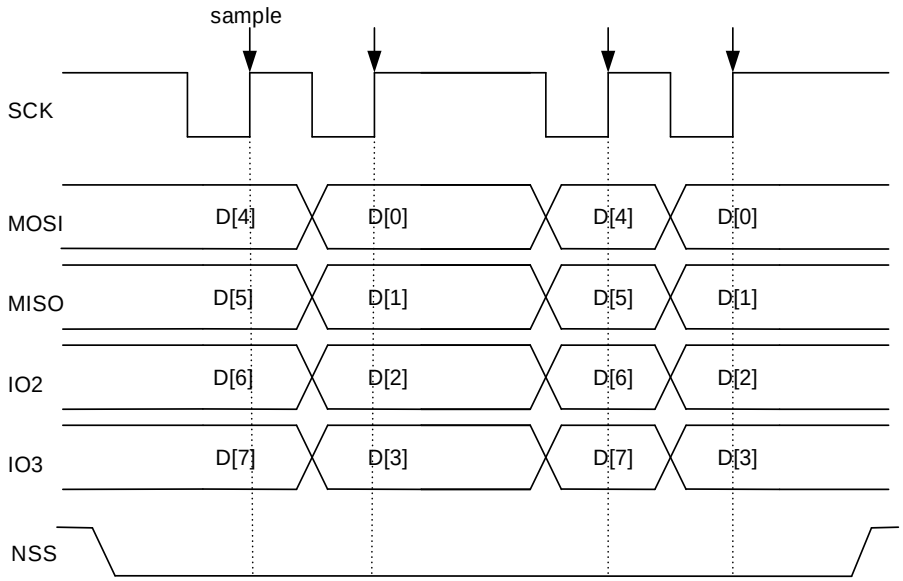

In SPI normal mode, the length of data is configured by the DZ[4:0] bits in the SPI_CFG0 register. It can be set from 4-bit up to 32-bit length and the setting applies for both transmission and reception. Data order is configured by LF bit in SPI_CFG1 register, and SPI will first send the LSB if LF = 1, or the MSB if LF = 0. The data order is fixed to MSB first in TI mode.The data frame length is fixed to 8 bits in Quad-SPI mode.

When the SPI_TDATA / SPI_RDATA register is accessed, data frames are always right-aligned into either a byte (if the data fits into a byte), a half-word or a word. During communication, only bits within the data frame are clocked and transferred.

Figure 27-4. SPI data frame right-aligned diagram

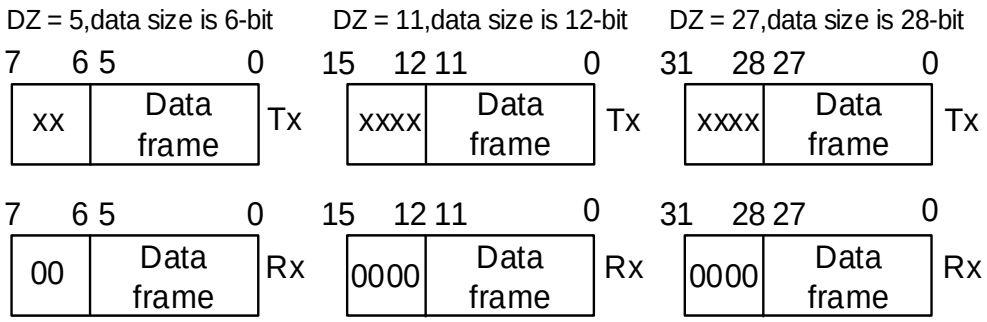

27.3.4. SPI clock delay mode

SPI can be configured as master or slave mode. When SPI is configured as master, the SCK signal is sent to slave after delay. The slave send data by MISO, the data is sent to master sampling side after delay. Because of a series of delays will lead to the received data and clock have phase difference, resulting in data sampling error, it will be more obvious under high speed transmission.

Figure 27-5. SPI data and clock transmission path diagram

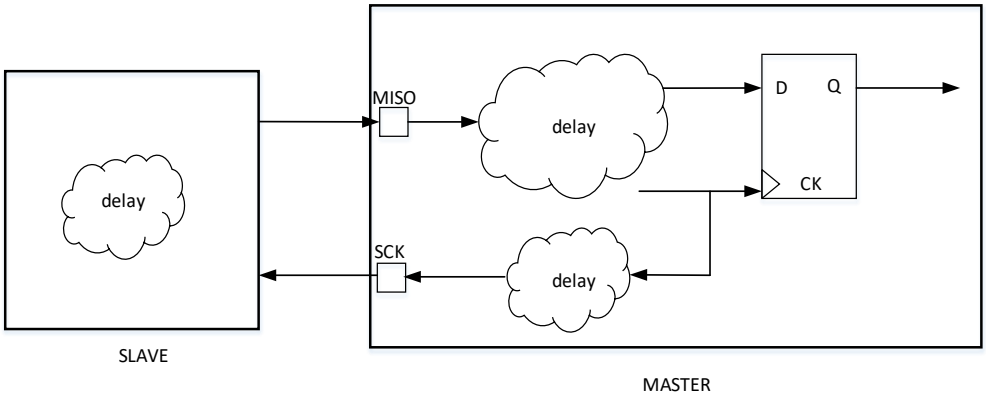

In order to solve this problem, can be configured SPI_RXDLYCK register to adjust SPI internal receive clock phase that meet the correct sampling sequence(this configuration is optional, requires a combination of the actual scenario).

If the MRXDEN bit in the SPI_RXDLYCK register is set to 0, the delay function is opened, otherwise the delay function is closed. The MRXD[4:0] bits is used to configure delay units, the delay length can be configured to 1 ~ 32 units(one delay unit is 0.5ns in room temperature). User should configure T_{delay} latency according to their own scenario($T_{delay} > T_{delaysck} + T_{drd} + T_{delaymiso} + T_{su}$).

Figure 27-6. SPI master rx delay configuration diagram

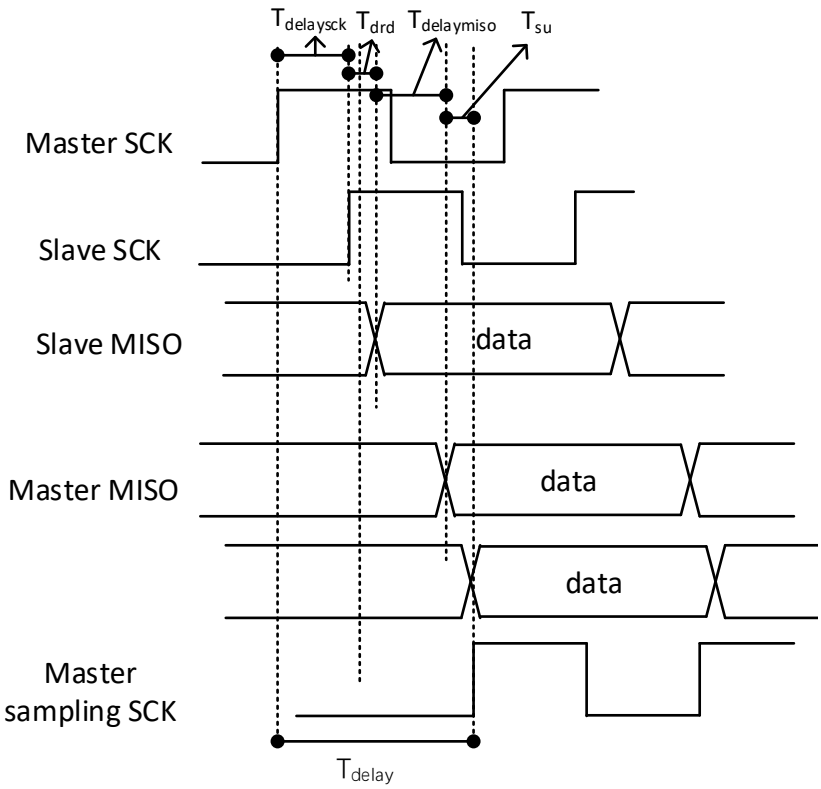

If the SPI is configured as slave mode. If the SRXDEN bit in the SPI_RXDLYCK register is set to 0, the delay function is opened, otherwise the delay function is closed. The SRXD[4:0] bits is used to configure delay units, the delay length can be configured to 1 ~ 32 units(one

delay unit is 0.5ns in room temperature). User should configure T_{delay} latency according to their own scenario($T_{delay} > T_{drc} + T_{su}$).

Figure 27-7. SPI slave rx delay configuration diagram

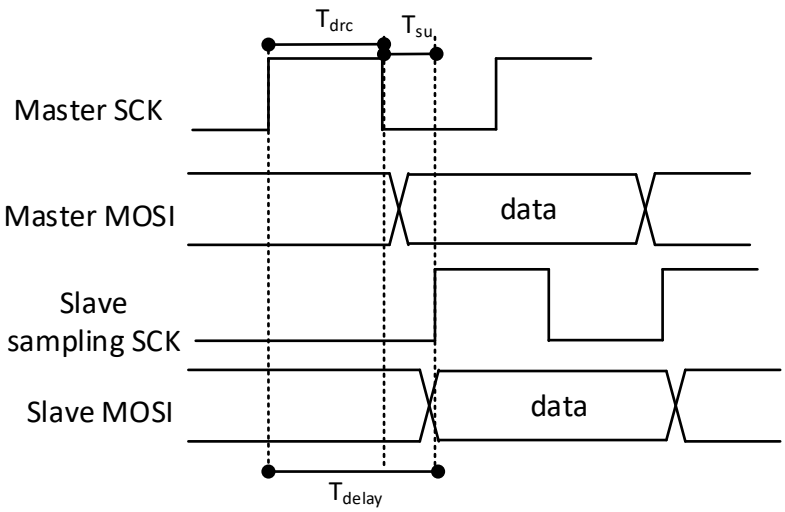

27.3.5. RxFIFO and TxFIFO

RxFIFO and TxFIFO are used in different directions for SPI data transactions, and they can enable the SPI to work in a continuous flow, and can prevent short data frame length or interrupt / DMA overrun occurs when the delay is too long.

A write access to the SPI_TDATA register stores the written data in the end of TxFIFO, while a read access to the SPI_RDATA returns the oldest value in RxFIFO which has not been read. FIFO processing depends on the data exchange mode (duplex and simplex), data frame format (DZ value), the size of the access to the FIFO register (8, 16, or 32 bits) and how the data is organized in the packet. The size of TxFIFO / RxFIFO is 16 x 32 bits and the maximum access data frame length is 32 bits. According to different frame length, the maximum number of frames that can be stored in FIFO is described in

Table 27-4. The maxinum number of data frame stored in SPIX **FIFO.** (N = FIFO size / 32 = 16 x 32 / 32 = 16)

Table 27-4. The maxinum number of data frame stored in SPIX FIFO

Frame size（DZ）	DZ <= 8bit	8bit < DZ <= 16bit	16bit < DZ <= 24bit	DZ > 24bit
Frame numbers (BYTEN = 1, WORDEN = 0)	N	-	-	-
Frame numbers (BYTEN = 0, WORDEN = 0)	2N	N		

Frame numbers (WORDEN = 1)	4N	2N	N	N

NOTE: Both RxFIFO and TxFIFO content is kept flushed when SPI is disable (SPIEN = 0).

RxFIFO reception

A read access to SPI_RDATA is managed by the RP event. This is triggered when RxFIFO is not considered to be empty (at least a complete data packet in RxFIFO). When RP is cleared, the RxFIFO is considered to be empty (or the data packet in RxFIFO is incomplete). RP triggers interrupts at RPIE position 1, or DMA requests at DMAREN position 1.

TxFIFO transmission

Write access to SPI_TDATA is managed by the TP event. This event is triggered when TxFIFO has enough available space to receive a packet. If the TxFIFO is filled by software or DMA, the TP flag cleared. If there is not enough space to store at least one data packet when TXF set to 1 or SPI disable, write to TxFIFO is will be ignored. TP triggers interrupts at TPIE position 1, or DMA requests at DMATEN position 1. TPIE shield is cleared by hardware when TXF flag is set to 1.

Duplex packet handing

In full-duplex mode, the DP bit can monitor the TP and RP events. With the DP flag set to 1, the application writes an appropriate number of data to the SPI_TDATA register to upload one complete packet, and then reads an equal number of data from the SPI_RDATA register to download one complete packet. After a packet is uploaded and downloaded, the application checks the DP value to see if it can be ordered push in and pop up other packets, and if possible, upload/download them packet by packet until DP reads 0. DP triggers interrupts with DPIE set 1, or DMA requestion when both DMATEN and DMAREN set to 1. DPIE shield is cleared by hardware when TXF flag is set to 1.

If the next data is received while the RxFIFO is full, the reception overrun event occurs. Overrun events can be polled or handled by interrupts. This may occur in slave mode or master mode (full-duplex or receive-only mode, MASP = 0). The main device is in receive-only mode, when MASP = 1, if the RxFIFO is full, the generated clock will stop automatically to prevent the overrun events.

Data packing

When the data frame size (DZ) <= 8 bits, data packing mode is automatically enabled when any 16-bit or 32-bit read or write access in SPI_RDATA or SPI_TDATA (BYTEN = 0 or WORDEN = 1). The multi-data frames pattern is handled in parallel in this case. At the sending terminal, if FIFOLVL = 1 (2 data frames in a packet) or FIFOLVL = 3 (4 data frams in a packet), two or four data frames are sent after the single 16-bit or 32-bit access the SPI_TDATA register of the transmitter. At the receiving terminal, if FIFOLVL = 1 (2 data frames in a packet) or FIFOLVL = 3 (4 data frams in a packet), two or four data frames are

received simultaneously after the single 16-bit or 32-bit access the SPI_RDATA register of the receiver, which can generate just one RP event in the receiver. The receiver then has to read all data frames by 16-bit or 32-bit from SPI_RDATA. If FIFOLVL = 0 (1 data frames in a packet), the receiver will generate two or four RP events when reading a data frame by 16-bit or 32-bit from SPI_RDATA.

If 9-bit <= DZ <= 16-bit, data packing mode is automatically enabled when any 32-bit read or write access in SPI_RDATA or SPI_TDATA. The least significant halfword will be used to store significant data. At the sending terminal, if FIFOLVL = 1 (2 data frames in a packet), two data frames are sent after the single 32-bit access the SPI_TDATA register of the transmitter. At the receiving terminal, if FIFOLVL = 1 (2 data frames in a packet), two data frames are received simultaneously after the single 32-bit access the SPI_RDATA register of the receiver, which can generate just one RP event in the receiver. The receiver then has to read all data frames by 32-bit from SPI_RDATA. If FIFOLVL = 0 (1 data frames in a packet), the receiver will generate two RP events when reading a data frame by 32-bit from SPI_RDATA.

When short data frame size (< 8-bit or < 16-bit) are paired with large data access patterns (16-bit or 32-bit), the FIFOLVL value must be configured as a multiple of the number of data frames , multiple of 4 if 32-bit access is used for frames up to 8 bits, multiple of 2 if 16-bit access is used for frames up to 8-bit or multiple of 2 while 32-bit access is used for frames up to 16-bit.

The FIFOLVL setting must always be higher than the subsequent read access size, otherwise additional pseudo-data will be read. FIFO data access that is smaller than the configured data size is not allowed (Data frame size is configured by DZ, the size of FIFO data access is configured by BYTEN and WORDEN). Always ensure that at least one complete data frame is accessed.

Sequential transaction handing

Users can processes multiple numbers of data in a message according to TXSIZE and TXSER value. The transaction of a message starts when SPI is enabled by setting MSTART bit and finishes when the number of data required has been transferred. If TXSIZE remains zero when MSTART is set to 1, the infinite transaction is initialized. Transactions can be suspended at any time by setting the MSPDR bit, which clears MSTART bit.

In master mode, after the number of data in TXSIZE has been transferred, if TXSER contains a non-zero value, the value of TXSER will be copied to TXSIZE and the TXSER value is cleared automatically. The transmission will then increase the number of data corresponding to the newly loaded value in TXSIZE. After the reload operation, if TXSERFIE is set to 1, the TXSERF flag is set to 1 and will triggers interrupt. The user can write the next non-zero value to the TXSER before the next reload, so it can handle multiple data. In this case, ET events do not occur because transmission continues.

If data amount of TXSIZE or TXSER (number of data frames) is not aligned with packet length defined in FIFOLVL, then the last incomplete packet before the end of sending needs to be packaged. ***Data packing*** detail describe the principle of packaging.

Note: in order to prevent transmission underrun, the SPI_URDATA register of slave can be written to a specific value. When the TxFIFO of slave becomes empty, the value in its SPI_URDATA will be the next data is sent out automatically, and after the host receives this value which can be parsed by the software, so the host can suspend its receiver through software operation.

Transaction delay handing

If the reception speed of slave is less than the transmission speed of master, the master must be to reduce the transmission speed, by lowering the clock frequency or increase the time delay between data frames. The MDFD[3:0] bits in SPI_CFG1 register is used to add delay between data frames in master mode, and MSSD[3:0] is used to add delay between active edge of NSS and start transfer or receive data in master mode. ***NSS signal timing*** shows the detail description.

27.3.6. NSS function

Slave mode

When slave mode is configured (MSTMOD = 0), SPI gets NSS level from NSS pin in hardware NSS mode (NSSIM = 0) or from NSSI bit in software NSS mode (NSSIM = 1) and transmits / receives data only when NSS level is active. The user can set NSSIOPL bit to decide the active level of input/output external signals (on NSS pins).

Table 27-5. NSS function in slave mode

Mode	Register configuration	Description
Slave hardware NSS mode	MSTMOD = 0 NSSIM = 0	SPI slave gets NSS level from NSS pin.
Slave software NSS mode	MSTMOD = 0 NSSIM = 1	SPI slave NSS level is determined by the NSSI bit. NSSI = 0: NSS level is low NSSI = 1: NSS level is high

Master mode

In master mode (MSTMOD = 1) if the application uses multi-master connection, NSS can be configured to hardware input mode (NSSIM = 0, NSSDRV = 0) or software mode (NSSIM = 1). Then, once the NSS pin (in hardware NSS mode) or the NSSI bit (in software NSS mode) goes non-active, the SPI automatically enters slave mode and triggers a master fault flag CONFERR.

If the application wants to use NSS line to control the SPI slave, NSS should be configured to hardware output mode (NSSIM = 0, NSSDRV = 1). If SPI is enable, NSS stays active level when transmission or reception process begins. When SPI is disabled or transmission or

reception process end (ET flag set 1), the NSS become non-active level.

Applications can use a generic I/O port as an NSS pin for more flexible NSS applications.

Table 27-6. NSS function in master mode

Mode	Register configuration	Description
Master hardware NSS output mode	MSTMOD = 1 NSSIM = 0 NSSDRV = 1	Applicable to single-master mode. The master uses the NSS pin to control the SPI slave device. At this time, the NSS is configured as the hardware output mode. NSS become active level after enabling SPI.
Master hardware NSS input mode	MSTMOD = 1 NSSIM = 0 NSSDRV = 0	Applicable to multi-master mode. At this time, NSS is configured as hardware input mode. Once the NSS pin become non-active level, SPI will automatically enter slave mode, and a master configuration error will occur and the CONFERR bit will be set to 1.
Master software NSS mode	MSTMOD = 1 NSSIM = 1 NSSI = 0 NSSDRV: Don't care	Applicable to multi-master mode. Once NSS become non-active level, SPI will automatically enter slave mode, and a master configuration error will occur and the CONFERR bit will be 1.
	MSTMOD = 1 NSSIM = 1 NSSI = 1 NSSDRV: Don't care	The slave can use hardware or software NSS mode.

NSS signal timing

When applying hardware output NSS control (NSSIM = 0, NSSDRV = 1), users can configure MDFD[3:0] and MSSD[3:0] bit fields to control NSS signal timing between data frames and insert additional delay at the start of each transaction (to separate NSS and clock start). ***Figure 27-8. NSS signal delay timing diagram (MSSD[3:0] = 0011 (3 x T_{clk}), MDFD = 0011 (3 x T_{clk}))*** shows the effective delay time between data singal and NSS signal with MSSD[3:0] = 3, and the effective delay time between data frames with MDFD[3:0] = 3.

Figure 27-8. NSS signal delay timing diagram (MSSD[3:0] = 0011 (3 x T_{clk}), MDFD =

0011 (3 x T_{clk}))

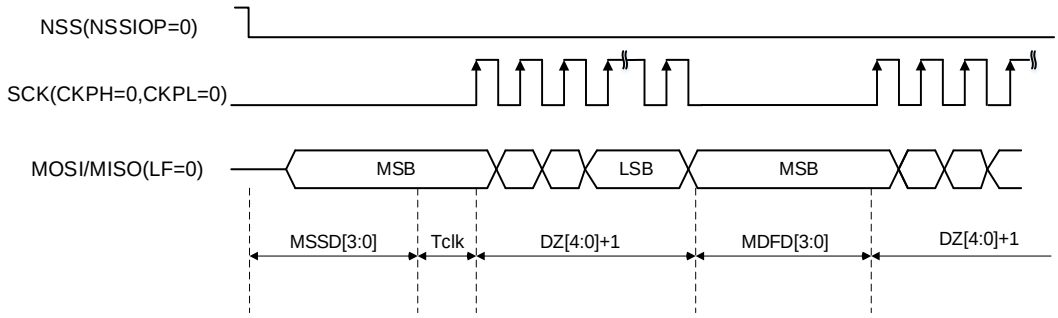

When NSSCTL = 1 and MDFD[3:0] > 1, interlaced pulses can be inserted between SPI data frames. ***Figure 27-9. NSS interlaced pulses timing diagram (MSSD[3:0] = 0011 (3 x T_{clk}), MDFD = 0011 (3 x T_{clk}))*** shows the NSS signal pluse status with MDFD[3:0] > 1.

Figure 27-9. NSS interlaced pulses timing diagram (MSSD[3:0] = 0011 (3 x T_{clk}), MDFD = 0011 (3 x T_{clk}))

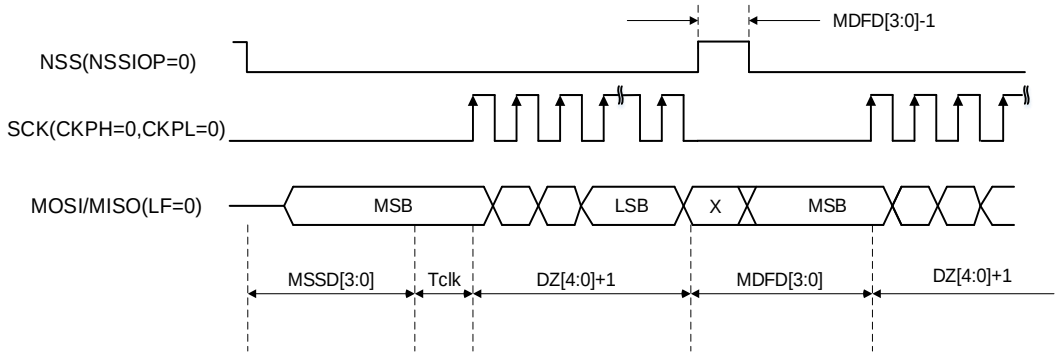

27.3.7. SPI operation modes

Table 27-7. SPI operation modes

Mode	Description	Register configuration	Data pin usage
MFD	Master full-duplex	MSTMOD = 1 RO = 0 BDEN = 0 BDOEN: Don't care	MOSI: Transmission MISO: Reception
MTU	Master transmission with unidirectional connection	MSTMOD = 1 RO = 0 BDEN = 0 BDOEN: Don't care	MOSI: Transmission MISO: Not used
MRU	Master reception with unidirectional connection	MSTMOD = 1 RO = 1 BDEN = 0 BDOEN: Don't care	MOSI: Not used MISO: Reception

Mode	Description	Register configuration	Data pin usage
MTB	Master transmission with bidirectional connection	MSTMOD = 1 RO = 0 BDEN = 1 BDOEN = 1	MOSI: Transmission MISO: Not used
MRB	Master reception with bidirectional connection	MSTMOD = 1 RO = 0 BDEN = 1 BDOEN = 0	MOSI: Reception MISO: Not used
SFD	Slave full-duplex	MSTMOD = 0 RO = 0 BDEN = 0 BDOEN: Don't care	MOSI: Reception MISO: Transmission
STU	Slave transmission with unidirectional connection	MSTMOD = 0 RO = 0 BDEN = 0 BDOEN: Don't care	MOSI: Not used MISO: Transmission
SRU	Slave reception with unidirectional connection	MSTMOD = 0 RO = 1 BDEN = 0 BDOEN: Don't care	MOSI: Reception MISO: Not used
STB	Slave transmission with bidirectional connection	MSTMOD = 0 RO = 0 BDEN = 1 BDOEN = 1	MOSI: Not used MISO: Transmission
SRB	Slave reception with bidirectional connection	MSTMOD = 0 RO = 0 BDEN = 1 BDOEN = 0	MOSI: Not used MISO: Reception

Figure 27-10. A typical full-duplex connection

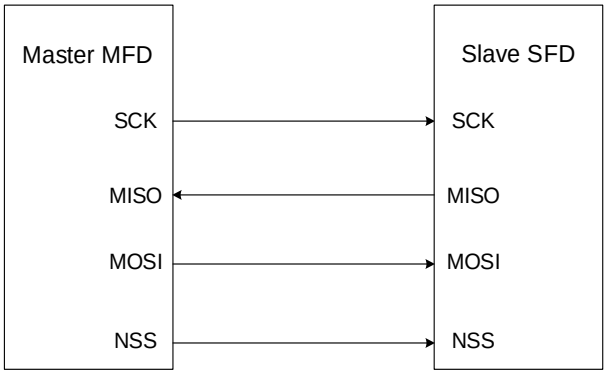

Figure 27-11. A typical simplex connection (Master: Receive, Slave: Transmit)

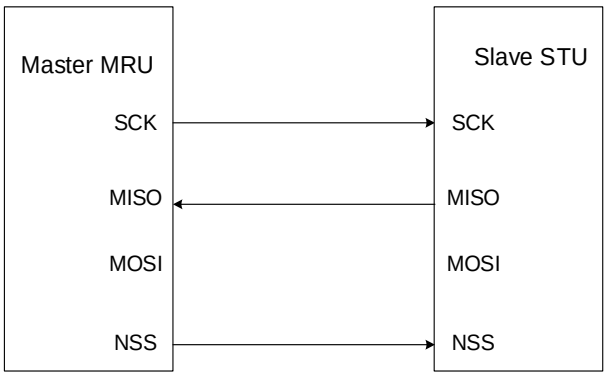

Figure 27-12. A typical simplex connection (Master: Transmit only, Slave: Receive)

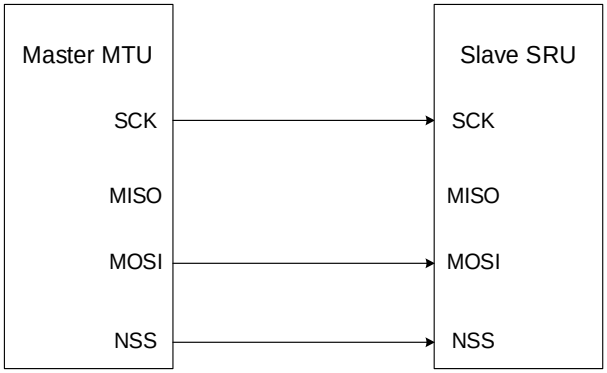

Figure 27-13. A typical bidirectional connection

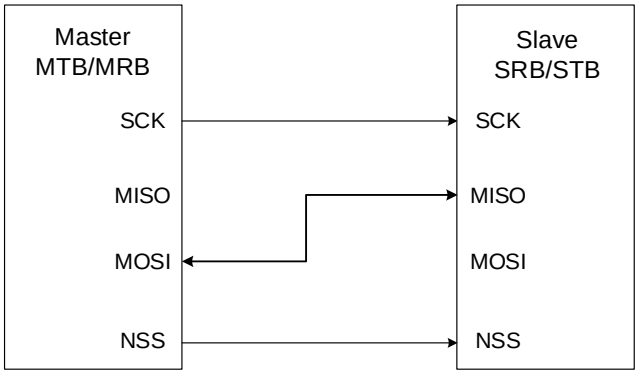

SPI initialization sequence

Before transmitting or receiving data, application should follow the SPI initialization sequence described below:

1. If master mode or TI mode is used, program the PSC [2:0] bits in SPI_CFG0 register to generate SCK with desired baud rate or configure the Td time in TI mode, otherwise, ignore this step.
2. Program the clock timing register (CKPL and CKPH bits in the SPI_CFG1 register).
3. Program the frame format (LF bit in the SPI_CFG1 register).

4. Program data format (DZ[4:0] bits in the SPI_CFG0 register).
5. Program the FIFO level (FIFOLVL[3:0] bits in the SPI_CFG0 register), and FIFO access size (WORDEN and BYTEN).
6. Program the NSS mode (NSSIM / NSSDRV / NSSIOPL / NSSCTL / MDFD[3:0] / MSSD[3:0] bits in the SPI_CFG1 register, NSSI bit in the SPI_CTL0 register) according to the application's demand as described above in ***NSS function*** section.
7. If slave mode, program the TXURDT[1:0] and TXUROP[1:0] bits in SPI_CFG0 register.
8. If TI mode is used, set TMOD bit in SPI_CFG1 register, otherwise, ignore this step.
9. Configure MSTMOD, RO, BDEN and BDOEN depending on the operating modes described in ***SPI operation modes*** section.
10. Program the SPI_CTL1 register to select the length of the transmission, and if the value is unknown, TXSIZE must be programmed to zero.
11. Program the SPI_CRCPOLY register, and program the CRCSZ[4:0] bit fields and CRCFS bit to configure CRC polynomials and CRC calculations as needed, described in ***CRC function*** section.
12. Initialize DMATEN / DMAREN bits if they are needed when DMA is used, described in ***DMA function*** section.
13. If Quad-SPI mode is used, set the QMOD bit in SPI_QCTL register. Ignore this step if Quad-SPI mode is not used.(only used in SPI3 / 4)
14. If you need to configure protection, program the IOAFEN bit of the SPI_CTL0 register.
15. Enable the SPI (set the SPIEN bit).
16. If master mode (MSTMOD =1), when SPIEN=1, program the MSTART bit in SPI_CTL0 to transfer data. Ignore this step if no data transfer is required.

Note: During communication, CKPH, CKPL, MSTMOD, PSC[2:0] and LF bits should not be changed.

SPI basic transmission and reception sequence

Transmission sequence

After the initialization sequence, the SPI is enabled and stays at idle state. In master mode, the transmission starts when the application writes a data into the TxFIFO. In slave mode the transmission starts when SCK clock signal begins to toggle at SCK pin and NSS level is active, so application should ensure that data is already written into TxFIFO before the transmission starts in slave mode.

When SPI begins to send a data frame, it first loads this data frame from the TxFIFO to the shift register and then begins to transmit the loaded data frame. The related operation is described in ***RxFIFO and TxFIFO*** sections.

Write access to SPI_TDATA is managed by the TP event. With the TP flag set to 1, the application performs an appropriate number of SPI data register writes to transfer the contents of the data package. After uploading the new complete package, the application checks the TP value to check whether TxFIFO can receive additional data packet, if TP = 1, they are uploaded packet by packet until TP reads 0. If the transmission size and packet size are not

aligned, when the last number of data packets to be transferred cannot reach the configured size (set by FIFOLVL). The application can still write standard number of previous complete packets to TxFIFO without adverse effects: only consistent data (complete data frames) will pull down to TxFIFO, while redundant write times (or any incomplete data) will be ignored.

In master mode, software should write the next data into SPI_TDATA register before the transmission of current data frame is completed if it desires to generate continuous transmission. As long as there is data in TxFIFO, data delivery continues until TxFIFO becomes empty.

Reception sequence

After the last valid sample clock, the incoming data will be moved from shift register to the RxFIFO and RP will be set to 1. The application should read SPI_RDATA register to get the received data and this will clear the RP flag automatically when the number of data less than FIFOLVL in RxFIFO. In MRU and MRB modes, hardware continuously sends clock signal to receive the next data frame, while in full-duplex master mode (MFD), hardware only receives the next data frame when the TxFIFO is not empty. The related operation is described in ***RxFIFO and TxFIFO*** sections.

A read access to SPI_RDATA is managed by the RP event. With the RP flag set to 1, the application performs an appropriate number of SPI data register reads to download a single piece of data contents of the package. After the complete packet is downloaded, the application checks the RP value to see whether there are other packets in the RxFIFO, if any, they are downloaded packet by packet until RP reads 0. At the end of the receive, it may occur that some data is still available in the RxFIFO without reaching the FIFOLVL level, so RP will not be set to 1. In this case, the number of remaining RX data frames in the RxFIFO will be indicated by RWNE and RPLVL in the SPI_STAT register. If the transmission size and packet size are not aligned, the above condition occurs when the last number of data packets to be received cannot reach the configured size (set by FIFOLVL). However, the application can still read standard number of previous complete packets from RxFIFO without adverse effects: only consistent data (complete data frames) will pull up from RxFIFO, while redundant read times (or any incomplete data) will read 0.

When receiving data, the master provides clock signal, and the receiving process is stopped when the master stops or suspends the SPI interface. The master initiates the process by setting MSTART to 1, which can be suspended by writing 1 to the MSPDR of the SPI_CTL0 register, or by writing 1 to the MASP bit. The receiving process also complete when the data frames number in TXSIZE and TXSER are transferred.

SPI operation sequence in different modes (Not Quad-SPI, TI mode)

In full-duplex mode, either MFD or SFD, the RP and TP flags should be monitored and then follow the sequences described above.

The transmission mode (MTU, MTB, STU or STB) is similar to the transmission sequence of full-duplex mode regardless of the RP and RXORERR bits.

The master reception mode (MRU or MRB) is different from the reception sequence of full-duplex mode. In MRU or MRB mode, after SPI is enabled, the SPI continuously generates SCK until the SPI is disabled. So the application should ignore the TP flag and read out RxFIFO in time after the RP flag is set, otherwise a data overrun fault will occur.

The slave reception mode (SRU or SRB) is similar to the reception sequence of full-duplex mode regardless of the TP flag.

SPI TI mode

SPI TI mode takes NSS as a special frame header flag signal and its operation sequence is similar to normal mode described above. The modes described above (MFD, MTU, MRU, MTB, MRB, SFD, STU, SRU, STB and SRB) are still supported in TI mode. While, in TI mode the CKPL, CKPH, LF, NSSIM, NSSIOPL, NSSDRV bits take no effect and the SCK sample edge is falling edge.

Figure 27-14. Timing diagram of TI master mode with discontinuous transfer

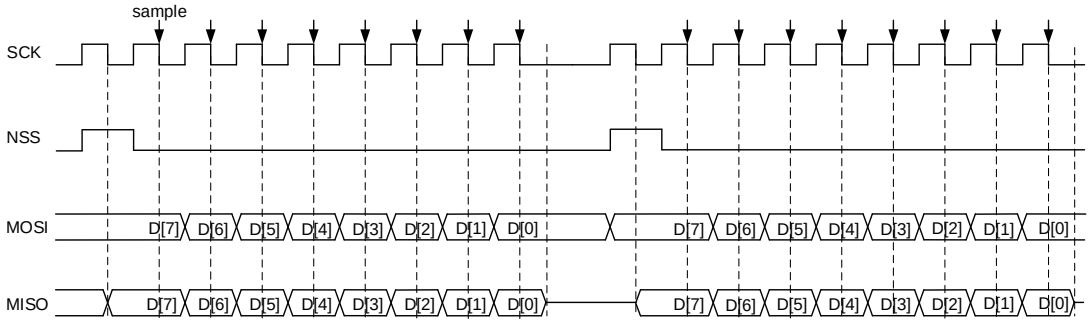

Figure 27-15. Timing diagram of TI master mode with continuous transfer

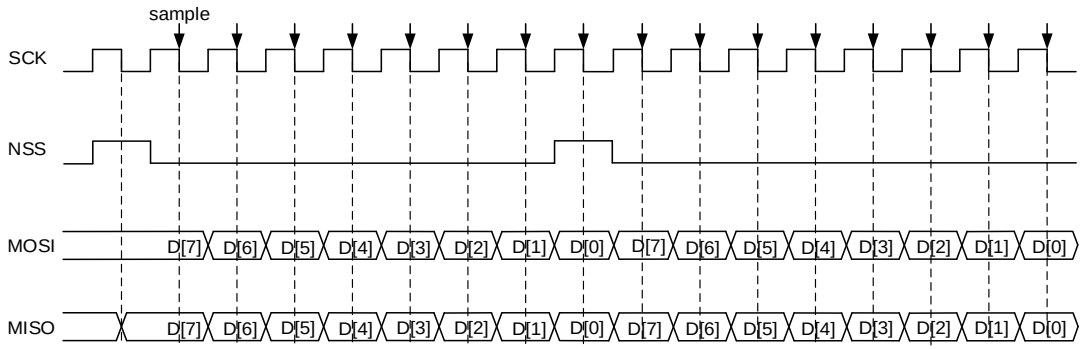

In master TI mode, SPI can perform continuous or non-continuous transfer. If the master writes SPI_TDATA register fast enough, the transfer is continuous, otherwise non-continuous. In non-continuous transfer there is an extra header clock cycle before each byte. While in continuous transfer, the extra header clock cycle only exists before the first byte and the following bytes' header clock is overlaid at the last bit of pervious bytes.

Figure 27-16. Timing diagram of TI slave mode

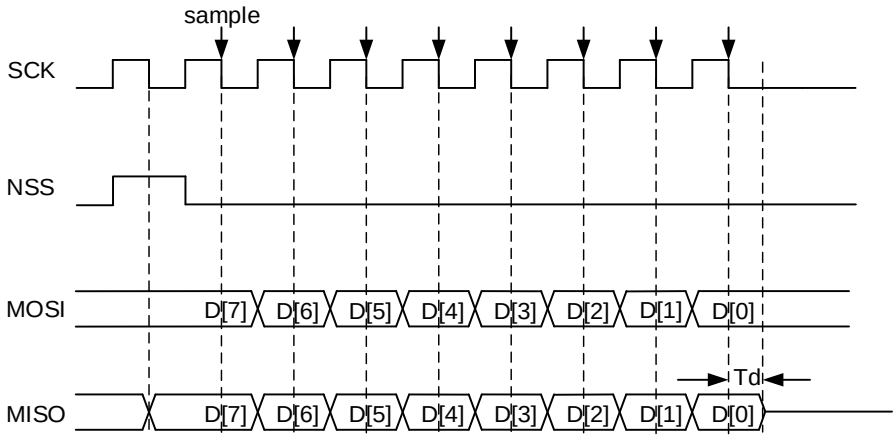

In slave TI mode, after the last rising edge of SCK in transfer, the slave begins to transmit the LSB bit of the last data byte, and after a half-bit time, the master begins to sample the line. To make sure that the master samples the right value, the slave should continue to drive this bit after the falling sample edge of SCK for a period of time before releasing the MISO pin. This time is called T_d. T_d is decided by PSC [2:0] bits in SPI_CFG0 register.

$$\frac{T_{bit}}{2} + 2 * T_{kerclk} \leq T_d \leq \frac{T_{bit}}{2} + 4 * T_{kerclk} \quad (27\text{-}1)$$

In slave mode, the slave also monitors the NSS signal and sets an error flag FERR if it detects an incorrect NSS behavior, for example: toggles at the middle bit of a byte.

Quad-SPI mode operation sequence

The Quad-SPI mode is designed to control Quad-SPI flash.

In order to enter Quad-SPI mode, the software should first verify that the TP and TC bits is set, then set QMOD bit in SPI_QCTL register. In Quad-SPI mode, BDEN, BDOEN, CRCEN, CRCSZ, RO and LF bits should be kept cleared and DZ[4:0] should be set to ensure that SPI data size is 8-bit, MSTMOD should be set to 1 for SPI is used in master mode. WORDEN should be set to 1. SPIEN, MSTART, TXSIZE, TXSER, PSC, CKPL and CKPH should be configured as desired.

Note: The CRC function is not supported in Quad-SPI mode. The PSC cannot be configured with two or four division frequencies.

There are two operation modes in Quad-SPI mode: quad write and quad read, decided by QRD bit in SPI_QCTL register.

Quad write operation

SPI works in quad write mode when QMOD is set and QRD is cleared in SPI_QCTL register. In this mode, MOSI, MISO, IO2 and IO3 are all used as output pins. SPI begins to generate clock on SCK line and transmit data on MOSI, MISO, IO2 and IO3 as soon as data is written into SPI_TDATA (TP is cleared) with SPIEN and MSTART bits are set. Once SPI starts

transmission, it always checks TP status at the end of a frame and stops when condition is not met.

The operation flow for transmitting in quad mode:

1. Configure clock prescaler, clock polarity, phase, etc. in SPI_CTL0 / SPI_CTL1 / SPI_CFG0 / SPI_CFG1 based on your application requirements.
2. Set QMOD bit in SPI_QCTL register and then enable SPI by setting SPIEN in SPI_CTL0 register.
3. Write a byte to SPI_TDATA register and the TP will be cleared.
4. Wait until TP is set by hardware again before writing the next byte.

Figure 27-17. Timing diagram of quad write operation in Quad-SPI mode

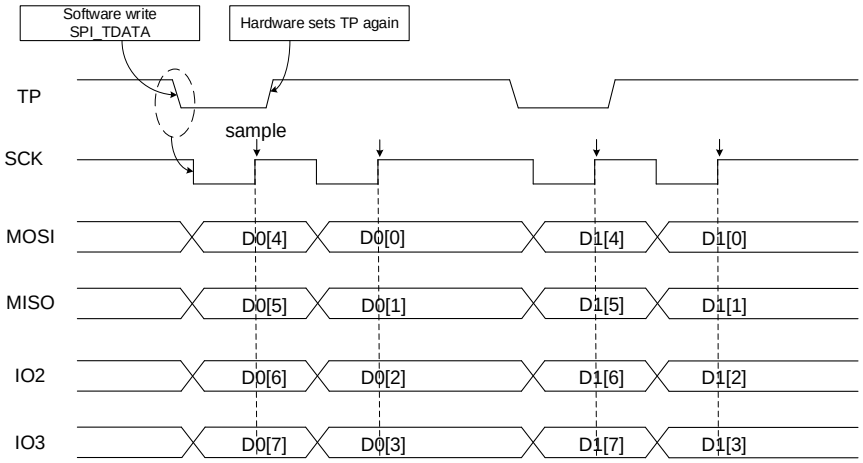

Quad read operation

SPI works in quad read mode when QMOD and QRD are both set in SPI_QCTL register. In this mode, MOSI, MISO, IO2 and IO3 are all used as input pins. SPI begins to generate clock on SCK line as soon as a data is written into SPI_TDATA (TP is cleared) and SPIEN is set. Writing data into SPI_TDATA is only to generate SCK clocks, so the written data can be any value. Once SPI starts transmission, it always checks SPIEN and TP status at the end of a frame and stops when condition is not met. So, dummy data should always be written into SPI_TDATA to generate SCK.

The operation flow for receiving in quad mode is shown below:

1. Configure clock prescaler, clock polarity, phase, etc. in SPI_CTL0 / SPI_CTL1 / SPI_CFG0 / SPI_CFG1 register based on your application requirements.
2. Set QMOD and QRD bits in SPI_QCTL register and then enable SPI by setting SPIEN in SPI_CTL0 register.
3. Write an arbitrary byte (for example, 0xFF) to SPI_TDATA register.
4. Wait until the RP flag is set and read SPI_RDATA to get the received byte.
5. Write an arbitrary byte (for example, 0xFF) to SPI_TDATA to receive the next byte.

Figure 27-18. Timing diagram of quad read operation in Quad-SPI mode

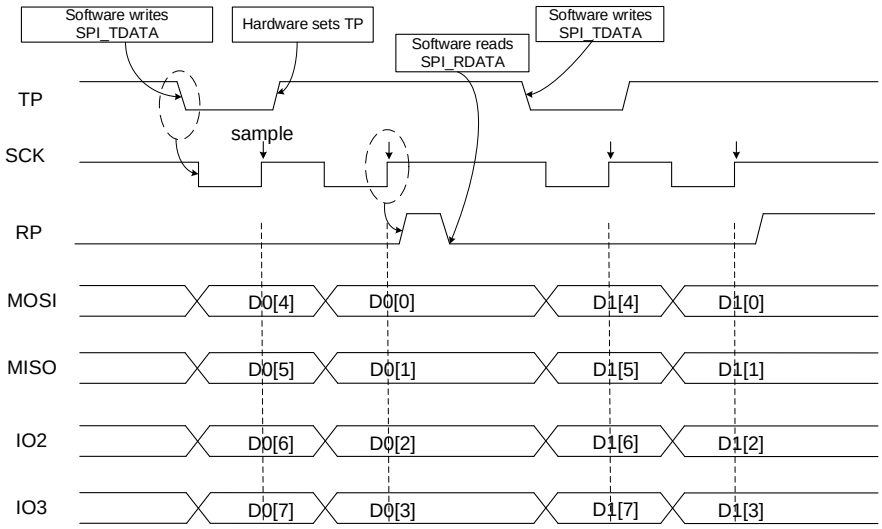

SPI disabling sequence

Different sequences are used to disable the SPI in different operation modes:

MFD MTU MTB SFD STU STB

Any transaction can be terminated when the device in full duplex or send only mode which stops providing data to be sent. In this In this case, the clock stops after the last data has been transferred. The TC flag can be polled (or enable interrupt through ESTCIE = 1) to wait for the last data frame to be sent. Wait for TC = 1 or ET = 1 (no more data to be sent and send the last data frame). If enable CRC function, CRC will be sent automatically after the last data is processed. In this case TC/ET will be set to 1 after CRC frame completion. When sending is suspended, the software must wait until the MSTART bit is cleared. Then disable the SPI by clearing SPIEN bit.

MRU MRB

To stop peripherals, SPI communication must first be suspended by setting MSPDR to 1 or wait for data transmission complete according to ET flag when the master device is in receive-only mode. If the receive flow is paused, please wait for SPD = 1. When the SPI is suspended, the data received but not read is always stored in the RxFIFO (When SPI is disable, RxFIFO will be cleared). Read all RxFIFO data (until RWNE = 0 and RPLVL = 0). Then disable the SPI by clearing SPIEN bit.

SRU SRB

Application can disable the SPI when it doesn’t want to receive data, and any ongoing data will be lost.

TI mode

The disabling sequence of TI mode is the same as the sequences described above.

Quad-SPI mode

Application can operate as MFD mode, then the QMOD bit in SPI_QCTL register and SPIEN bit in SPI_CTL0 register are cleared.

27.3.8. DMA function

The DMA frees the application from data writing and reading process during transfer, to improve the system efficiency.

DMA function in SPI is enabled by setting DMATEN and DMAREN bits in SPI_CFG0 register. To use DMA function, application should first correctly configure DMA modules, then configure SPI module according to the initialization sequence, at last enable SPI.

After initialization finish, If DMATEN is set, SPI will generate a DMA request each time when TP = 1, then DMA will acknowledge to this request and write data into the SPI_TDATA register automatically. If the data to transfer is not ready, TP and TXURERR will be set to 1. In this case, data will be sent based on the TXUROP bit selection. If DMAREN is set, SPI will generate a DMA request each time when RP = 1, then DMA will acknowledge to this request and read data from the SPI_RDATA register automatically. If the ET is set to 1 at the end of the transaction and the last packet is incomplete, DMA requests are automatically activated to read the rest of the data according to RWNE and RPLVL[1:0] settings(in SPI_STAT register).

Data packing with DMA

If the transfers are managed by DMA (DMATEN = 1 or DMAREN = 1), when DZ[4:0] <= 8-bit, and SPI_TDATA register is accessed in 16-bits or 32-bit, or 8-bit < DZ[4:0] <= 16-bit , and SPI_TDATA register is accessed in 32-bit, the DMA data packing mode is enabled, the DMA should automatically manages the write operations to the SPI_TDATA register.

Regardless of the data packing mode used, and regardless of whether the number of data to be transferred is multiple of DMA data size (16 or 32 bits). When the frame size is small, DMA will automatically complete the transfer based on the TXSIZE field setting. To configure DMA, DMA data access that is smaller than the configured data size is forbidden. Always be sure the data to access at least one complete data frames.

27.3.9. CRC function

There are two CRC calculators in SPI: one for transmission and the other for reception. The CRC calculation uses the polynomial defined in SPI_CRCPOLY register. The polynomial length is defined by the most significant bit of SPI_CECPOLY register. If DZ <= 32-bit, CRC polynomial length supports 5 – 33 bits. If DZ <= 16-bit, CRC polynomial length supports 5 –

17 bits. The CRC polynomial length must be greater than the DZ value. If DZ = 32-bit or DZ = 16-bit, the CRCFS bit in SPI_CTL0 register must be set to 1 to make sure CRC polynomial used in full scale mode. The CRCSZ bit fields in SPI_CFG0 register can define the most significant bit number processed by the CRC calculator and comparing with CRC frame.

Application can enable the CRC function by setting CRCEN bit in SPI_CFG0 register. The CRC calculators continuously calculate CRC for each bit transmitted and received on lines, and the calculated CRC values can be read from SPI_TCRC and SPI_RCRC registers. Sending and receiving of CRC value is implemented in the form of frame, the frame length is equal to the length of the CRCSZ bit fields in SPI_CTL0 register.

In transmission phase, hardware send the calculated CRC value stored in SPI_TCRC register automatically after the last data is written to the TxFIFO. In reception phase, the CRC value is stored into SPI_RCRC register after the last data is read from the RxFIFO. The CRC calculator will get CRC value by performing CRC calculation to the received data, and the CRC value will be compare with the SPI_RCRC value. When CRC checking fails, the CRCERR flag will be set. Writing 1 to CRCERRC bit in SPI_STATC register can clear the CRCERR bit.

Note: when the SPI is disable, or at the beginning of the new data sampling after the last data transmission is completed, the SPI_TCRC and SPI_RCRC registers will be initialized, the value of the initialization can be defined by TXCRCI and RXCRCI bit in SPI_CTL0 register.

27.3.10. SPI interrupts

Status flags

- **Transmit packet space available flag (TP)**

This bit is set when the TxFIFO have enough available position to accommodate a packet, the software can write the next data packet to the TxFIFO by writing the SPI_TDATA register. This bit is clearred when the TxFIFO don't have enough space to place in the next packet, the software can not write the next data packet to the TxFIFO by writing the SPI_TDATA register.

- **Receive packet space available flag (RP)**

This bit is set when the RxFIFO is not empty, which means that at leaset one data packet is received and stored in the receive buffer, and software can read the data packet by reading the SPI_RDATA register. This bit is clearred when the RxFIFO is empty or the data stored in the RxFIFO can not reach the FIFOLVL. So software can not read the data packet by reading the SPI_RDATA register when RxFIFO is empty. Or in this case, the number of remaining RX data frames in the RxFIFO will be indicated by RWNE and RPLVL in the SPI_STAT register, the the application can still read standard number of previous complete packets from RxFIFO without adverse effects.

- **End of transmission/reception flag (ET)**

ET is a status flag to indicate whether the transmission/reception is ongoing or end. After complete transmission, i.e., when TXSIZE data volume is sent or received based on SPI, this flag is set by hardware and can be cleared by software set ETC bit in SPI_STATC register. The ET flag triggers an interrupt at ESTCIE is set to 1.

- **Duplex packet flag (DP)**

If the TP and RP flags are set to 1, the DP flag is set to 1, which means TxFIFO has space for write operations and RxFIFO contains at least one packet for read operations. DP is useful for full-duplex communication, optimizing data upload/download performance, thus minimizing the need for CPU bandwidth and system power, especially when SPI is operating in stop mode.

- **TxFIFO transmission has been filled flag (TXF)**

When all packets of one transsmisson are sent by the application or DMA, which means the TXSIZE data volume has been pushed into TxFIFO, TXF flag will be set to 1 by hardware. This bit can be cleared by the software writes 1 to the TXFC bit of SPI2S_TCRC register. The TXF flag triggers an interrupt at TXFIE is set to 1.

- **Additional number of SPI data to be transacted was reload flag (TXSERF)**

After processing the number of data in TXSIZE, if TXSER contains non-zero value, the contents of TXSER are copied to TXSIZE and the TXSER value is automatically cleared. The transmission will then increase the amount of data corresponding to the newly loaded value in TXSIZE. After the the amount of data have been sent to TxFIFO, the TXSERF flag is set to 1 and triggers an interrupt at TXSERFIE is set to 1.

- **Suspend flag (SPD)**

In master mode, the device automatically suspends the receive mode when the current frame is completed or the RxFIFO is full (MASP is set to 1 in SPI2S_CTL0 register), after MASPR is executed, SDP is set to 1 by hardware. The SPD flag is set to 1 and triggers an interrupt at ESTCIE is set to 1. The SPD flag can be cleared by writing 1 to SPDC bit in SPI_STATC register.

- **Transmission complete flag (TC)**

This flag is changed by hardware. If TXSIZE = 0, TxFIFO is empty, TC is set to 1, and there is no activity on the bus. If TXSIZE > 0, TC will be set to 1 at the end of the transmission regardless of TxFIFO usage. When TC is set to 1, the transmission is finish. The CRC mode is enabled, TC will be set to 1 after CRC is sent. The TC flag triggers an interrupt at ESTCIE is set to 1.

Error conditions

- **Configuration error (CONFERR)**

CONFERR is an error flag in master mode. In NSS hardware mode and the NSSDRV is not enabled, the CONFERR is set when the NSS pin is pulled low. In NSS software mode, the

CONFERR is set when the NSSI bit is 0. When the CONFERR is set, the SPIEN bit and the MSTMOD bit are cleared by hardware, the SPI is disabled and the device is forced into slave mode. The CONFERR can be cleared by writing 1 to the CONFERRC bit of SPI_STATC register. The CONFERR flag triggers an interrupt at CONFEIE is set to 1.

The SPIEN and MSTMOD bit are write protection until the CONFERR is cleared. The CONFERR bit of the slave cannot be set. In a multi-master configuration, the device can be in slave mode with CONFERR bit set, which means there might have been a multi-master conflict for system control.

- **Receive overrun error (RXORERR)**

The RXORERR bit is set if a data is received when the RxFIFO has not enough space to store this received data. The RxFIFO contents won't be covered with the newly incoming data, so the newly incoming data is lost. The RXORERR flag triggers an interrupt at RXOREIE is set to 1. The RXORERR can be cleared by writing 1 to the RXORERRC bit of SPI_STATC register.

- **Format error (FERR)**

In slave TI mode, the slave also monitors the NSS signal and set an error flag if it detects an incorrect NSS behavior, for example: toggles at the middle bit of a byte. The FERR flag triggers an interrupt at FEIE is set to 1. The FERR can be cleared by writing 1 to the FERRC bit of SPI_STATC register.

- **CRC error (CRCERR)**

When the CRCEN bit is set, the CRC calculation result of the received data in the SPI_RCRC register is compared with the received CRC value after the last data, the CRCERR is set when they are different. The CRCERR flag triggers an interrupt at CRCERIE is set to 1. The CRCERR can be cleared by writing 1 to the CRCERRC bit of SPI_STATC register.

- **Transmit underrun error (TXURERR)**

In slave transfer mode, if the TxFIFO is empty, and need to send new data into the transfer shift register, the TXURERR bit is set. After an underrun is caught, the next data supplied for sending depends on the TXUROP, WORDEN, BYTEN bit. The TXURERR flag triggers an interrupt at TXUREIE is set to 1. The TXURERR can be cleared by writing 1 to the TXURERRC bit of SPI_STATC register.

Table 27-8. SPI interrupt requests

Flag	Description	Clear method	Interrupt enable bit
TP	Transmit packet space available flag	TP is cleared by hardware when TxFIFO space less than FIFOLVL	TPIE
RP	Receive packet space available flag	RP is cleared by hardware when the data in RxFIFO less than	RPIE

Flag	Description	Clear method	Interrupt enable bit
		FIFOLVL	
ET	End of transmission/reception flag	ETC set to 1	ESTCIE
DP	Duplex packet flag	DP is cleared by hardware when TP and RP are cleared	DPIE
TXF	TxFIFO transmission has been filled flag	TXFC set to 1	TXFIE
TXSERF	Additional number of SPI data to be transacted was reload flag	TXSERFC set to 1	TXSERFIE
SPD	Suspend flag	SPDC set to 1	ESTCIE
TC	Transmission complete flag	TC is cleared by hardware when transmission start	ESTCIE
CONFERR	Configuration error	CONFERRC set to 1	CONFEIE
RXORERR	Receive overrun error	RXORERRC set to 1	RXOREIE
FERR	Format error	FERRC set to 1	FEIE
CRCERR	CRC error	CRCERRC set to 1	CRCERIE
TXURERR	Transmit underrun error	TXURERRC set to 1	TXUREIE

27.4. I2S function overview

27.4.1. I2S block diagram

Figure 27-19. Block diagram of I2S

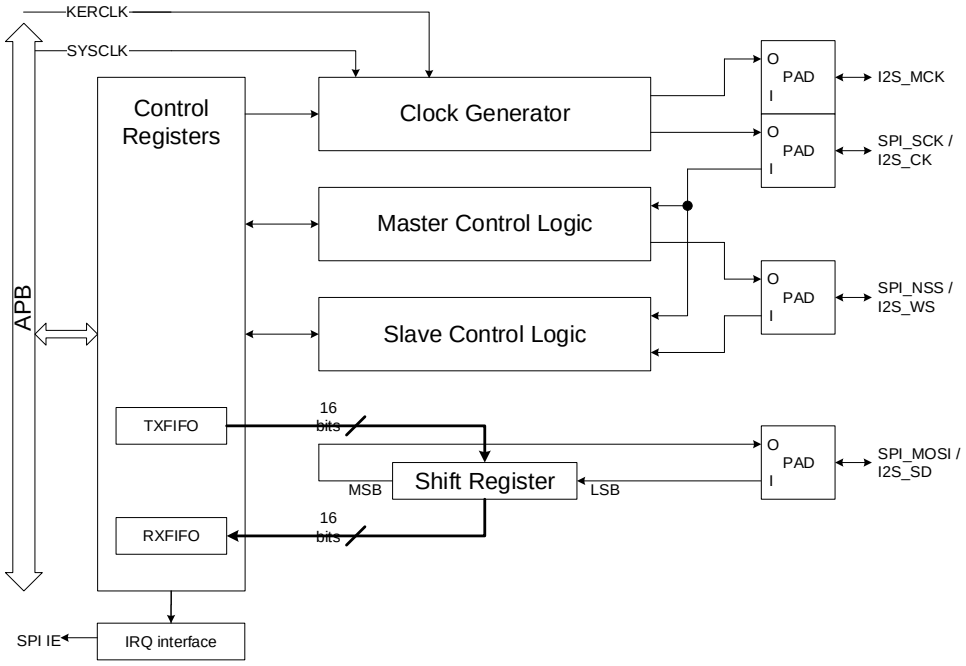

- SYSCLK: system clock, provided by APB bus.
- KERCLK: kernel clock, provided by RCU. It has an asynchronous relationship with the system clock.
- The clock signal frequency must be consistent with user conditions and data transmission speed to prevent data loss. (**NOTE**: suggest the frequency of SYSCLK is greater than or equal to KERCLK)
- The SCK signal of the I2S slave is provided by the I2S master.

There are five sub modules to support I2S function, including control registers, clock generator, master control logic, slave control logic and shift register. All the user configuration registers are implemented in the control registers module, including the TxFIFO and RxFIFO. The clock generator is used to produce I2S communication clock in master mode. This clock generator is the source of MCK. The master control logic is implemented to generate the I2S_WS signal and control the communication in master mode. The slave control logic is implemented to control the communication in slave mode according to the received I2SCK and I2S_WS. The shift register handles the serial data transmission and reception on I2S_SD.

27.4.2. I2S signal description

There are four pins on the I2S interface, including I2S_CK, I2S_WS, I2S_SD and I2S_MCK. I2S_CK is the serial clock signal, which shares the same pin with SPI_SCK. I2S_WS is the frame control signal, which shares the same pin with SPI_NSS. I2S_SD is the serial data signal, which shares the same pin with SPI_MOSI. I2S_MCK is the master clock signal. It produces a frequency rate equal to 256 x Fs, and Fs is the audio sampling frequency.

27.4.3. I2S audio standards

The I2S audio standard is selected by the I2SSTD bits in the SPI_I2SCTL register. Four audio standards are supported, including I2S Philips standard, MSB justified standard, LSB justified standard, and PCM standard. All standards except PCM handle audio data time-multiplexed on two channels (the left channel and the right channel). For these standards, the I2S_WS signal indicates the channel side. For PCM standard, the I2S_WS signal indicates frame synchronization information.

The data length and the channel length are configured by the DTLEN bits and CHLEN bit in the SPI_I2SCTL register. Since the channel length must be greater than or equal to the data length, four packet types are available. They are 16-bit data packed in 16-bit frame, 16-bit data packed in 32-bit frame, 24-bit data packed in 32-bit frame, and 32-bit data packed in 32-bit frame.

For all standards and packet types, the most significant bit (MSB) is always sent first. For all standards based on two channels time-multiplexed, the channel left is always sent first followed by the channel right.

I2S Philips standard

For I2S Philips standard, I2S_WS and I2S_SD are updated on the falling edge of I2S_CK, and I2S_WS becomes valid one clock before the data. The timing diagrams for each

configuration are shown below.

Figure 27-20. I2S Philips standard timing diagram (DTLEN = 00, CHLEN = 0, CKPL = 0)

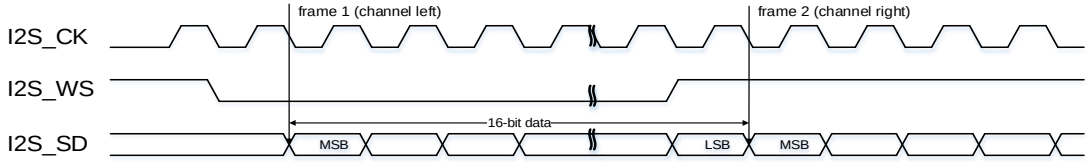

Figure 27-21. I2S Philips standard timing diagram (DTLEN = 00, CHLEN = 0, CKPL = 1)

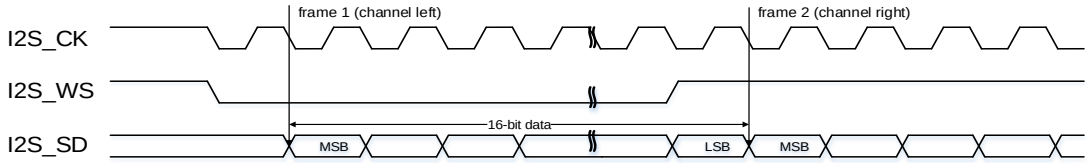

Figure 27-22. I2S Philips standard timing diagram (DTLEN = 10, CHLEN = 1, CKPL = 0)

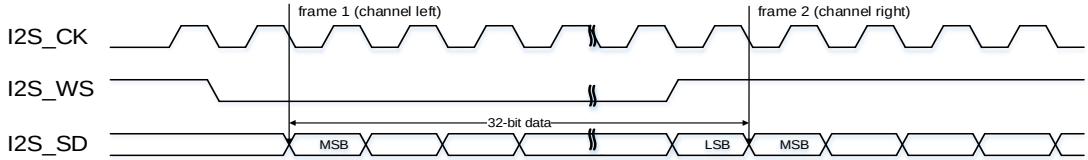

Figure 27-23. I2S Philips standard timing diagram (DTLEN = 10, CHLEN = 1, CKPL = 1)

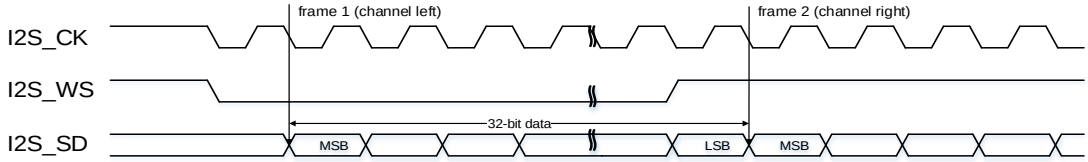

Figure 27-24. I2S Philips standard timing diagram (DTLEN = 01, CHLEN = 1, CKPL = 0)

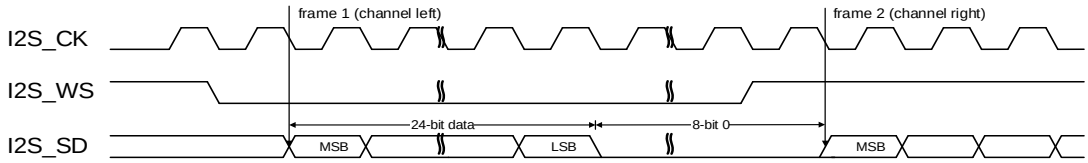

Figure 27-25. I2S Philips standard timing diagram (DTLEN = 01, CHLEN = 1, CKPL = 1)

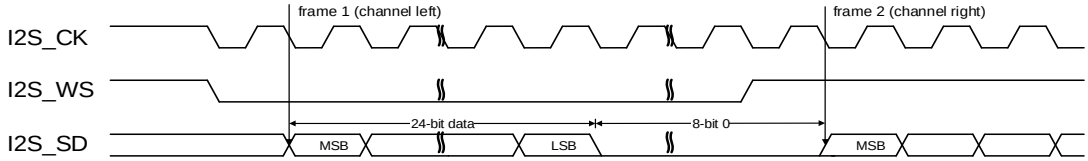

Figure 27-26. I2S Philips standard timing diagram (DTLEN = 00, CHLEN = 1, CKPL = 0)

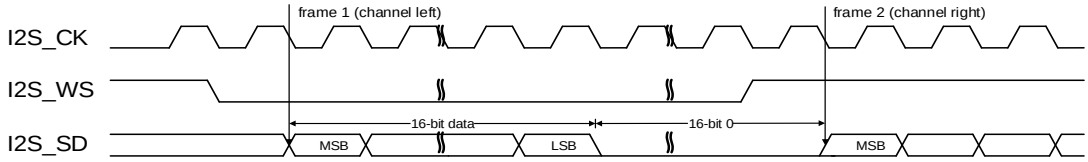

Figure 27-27. I2S Philips standard timing diagram (DTLEN = 00, CHLEN = 1, CKPL = 1)

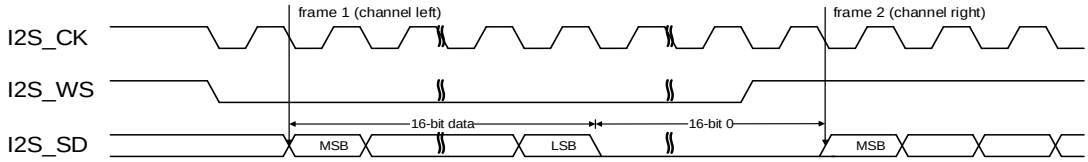

MSB justified standard

For MSB justified standard, I2S_WS and I2S_SD are updated on the falling edge of I2S_CK. The timing diagrams for each configuration are shown below.

Figure 27-28. MSB justified standard timing diagram (DTLEN = 00, CHLEN = 0, CKPL = 0)

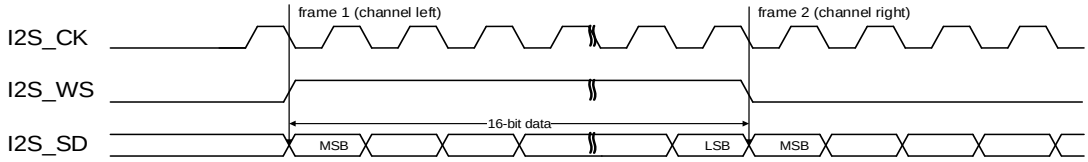

Figure 27-29. MSB justified standard timing diagram (DTLEN = 00, CHLEN = 0, CKPL = 1)

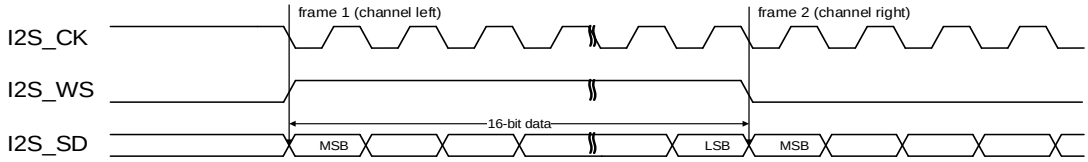

Figure 27-30. MSB justified standard timing diagram (DTLEN = 10, CHLEN = 1, CKPL = 0)

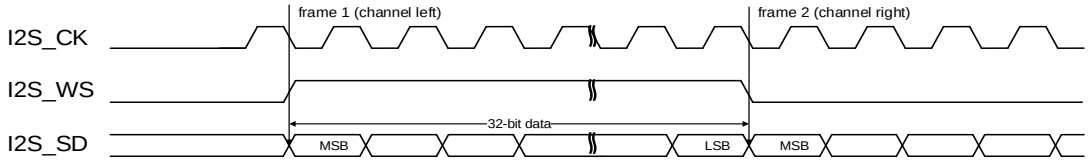

Figure 27-31. MSB justified standard timing diagram (DTLEN = 10, CHLEN = 1, CKPL =

1)

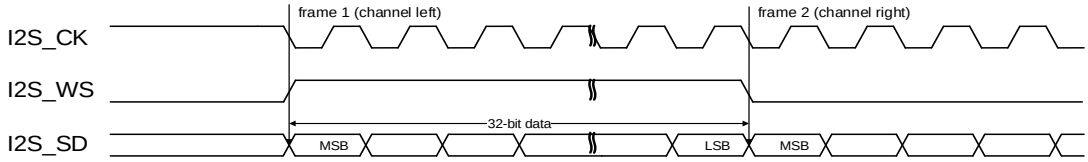

Figure 27-32. MSB justified standard timing diagram (DTLEN = 01, CHLEN = 1, CKPL = 0)

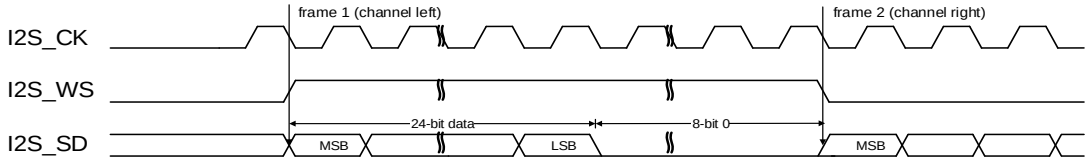

Figure 27-33. MSB justified standard timing diagram (DTLEN = 01, CHLEN = 1, CKPL = 1)

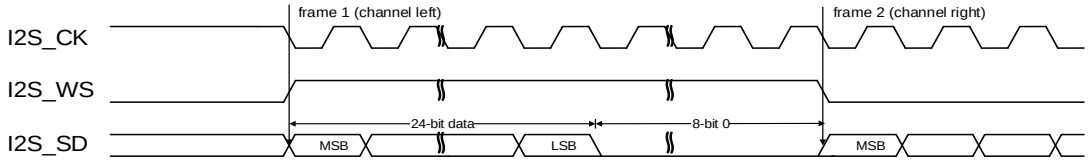

Figure 27-34. MSB justified standard timing diagram (DTLEN = 00, CHLEN = 1, CKPL = 0)

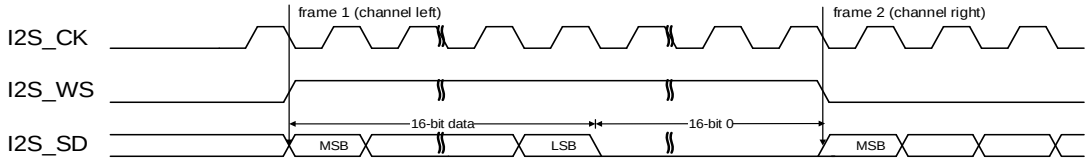

Figure 27-35. MSB justified standard timing diagram (DTLEN = 00, CHLEN = 1, CKPL = 1)

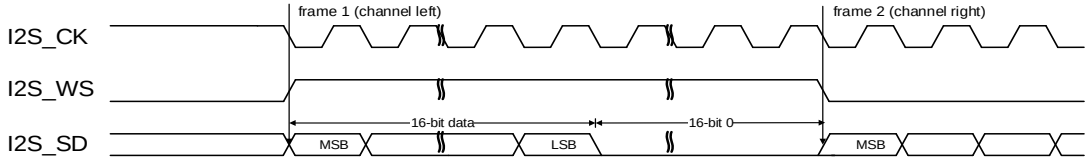

LSB justified standard

For LSB justified standard, I2S_WS and I2S_SD are updated on the falling edge of I2S_CK. In the case that the channel length is equal to the data length, LSB justified standard and MSB justified standard are exactly the same. In the case that the channel length is greater than the data length, the valid data is aligned to LSB for LSB justified standard while the valid data is aligned to MSB for MSB justified standard. The timing diagrams for the cases that the

channel length is greater than the data length are shown below.

Figure 27-36. LSB justified standard timing diagram (DTLEN = 01, CHLEN = 1, CKPL = 0)

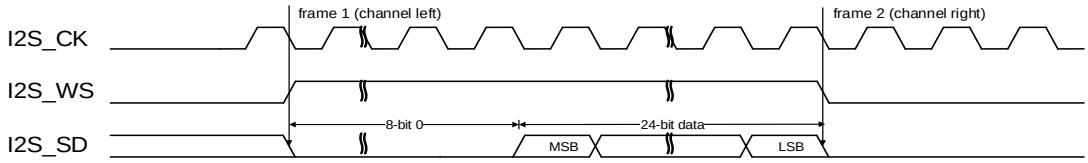

Figure 27-37. LSB justified standard timing diagram (DTLEN = 01, CHLEN = 1, CKPL = 1)

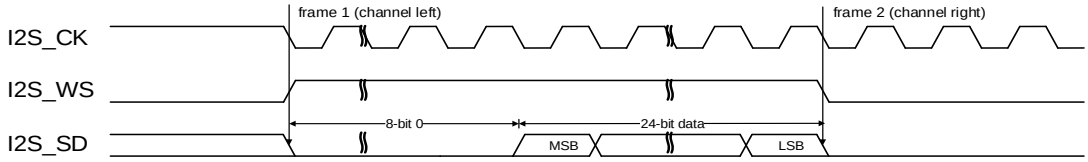

Figure 27-38. LSB justified standard timing diagram (DTLEN = 00, CHLEN = 1, CKPL = 0)

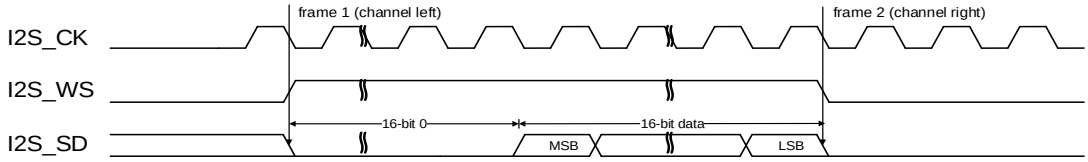

Figure 27-39. LSB justified standard timing diagram (DTLEN = 00, CHLEN = 1, CKPL = 1)

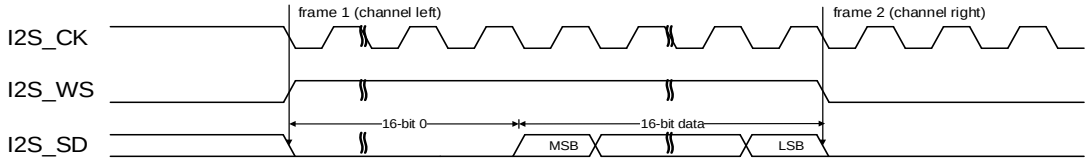

PCM standard

For PCM standard, I2S_WS and I2S_SD are updated on the rising edge of I2S_CK, and the I2S_WS signal indicates frame synchronization information. Both the short frame synchronization mode and the long frame synchronization mode are available and configurable using the PCMSMOD bit in the SPI_I2SCTL register. The SPI_TDATA / SPI_RDATA register is handled in the exactly same way as that for I2S Philips standard. The timing diagrams for each configuration of the short frame synchronization mode are shown below.

Figure 27-40. PCM standard short frame synchronization mode timing diagram (DTLEN

= 00, CHLEN = 0, CKPL = 0)

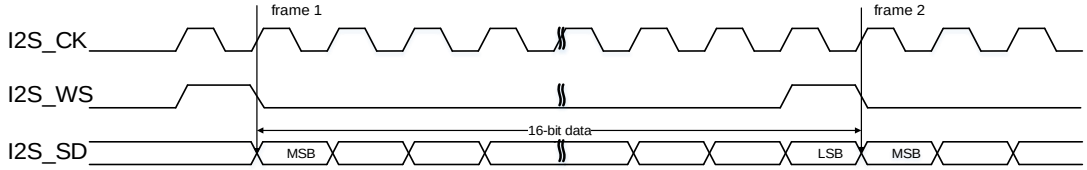

Figure 27-41. PCM standard short frame synchronization mode timing diagram (DTLEN = 00, CHLEN = 0, CKPL = 1)

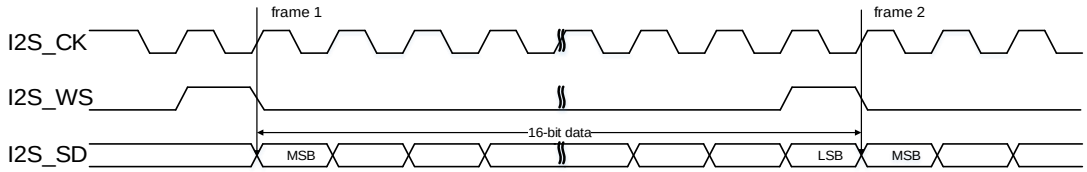

Figure 27-42. PCM standard short frame synchronization mode timing diagram (DTLEN = 10, CHLEN = 1, CKPL = 0)

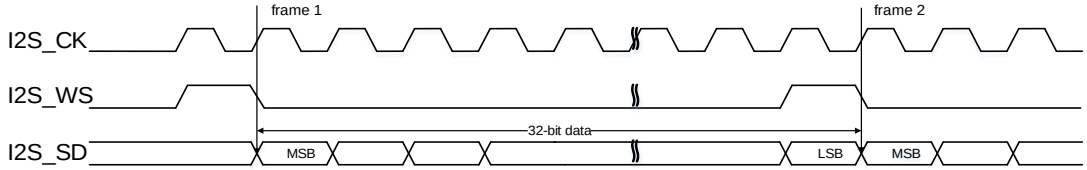

Figure 27-43. PCM standard short frame synchronization mode timing diagram (DTLEN = 10, CHLEN = 1, CKPL = 1)

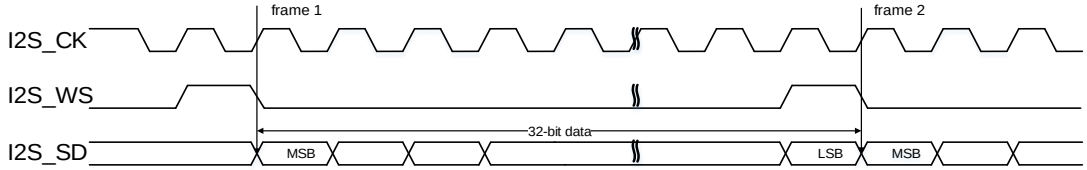

Figure 27-44. PCM standard short frame synchronization mode timing diagram (DTLEN = 01, CHLEN = 1, CKPL = 0)

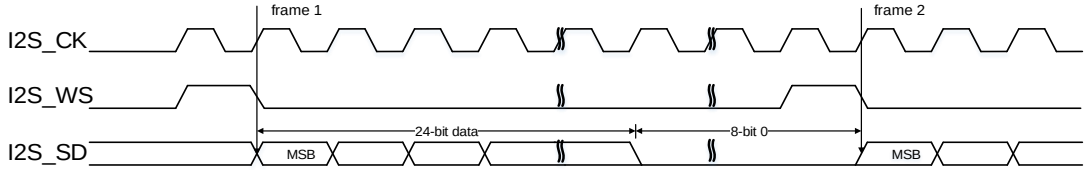

Figure 27-45. PCM standard short frame synchronization mode timing diagram (DTLEN = 01, CHLEN = 1, CKPL = 1)

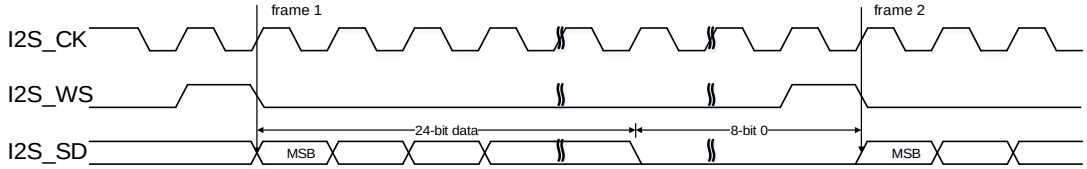

Figure 27-46. PCM standard short frame synchronization mode timing diagram (DTLEN = 00, CHLEN = 1, CKPL = 0)

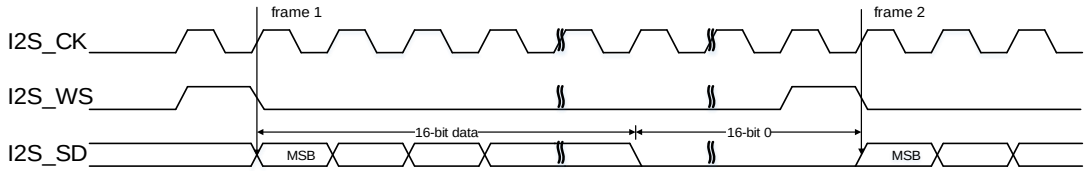

Figure 27-47. PCM standard short frame synchronization mode timing diagram (DTLEN = 00, CHLEN = 1, CKPL = 1)

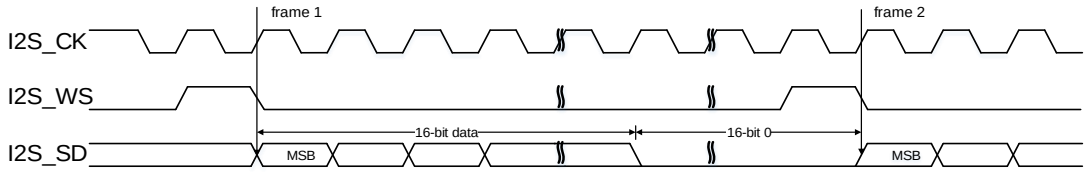

The timing diagrams for each configuration of the long frame synchronization mode are shown below.

Figure 27-48. PCM standard long frame synchronization mode timing diagram (DTLEN = 00, CHLEN = 0, CKPL = 0)

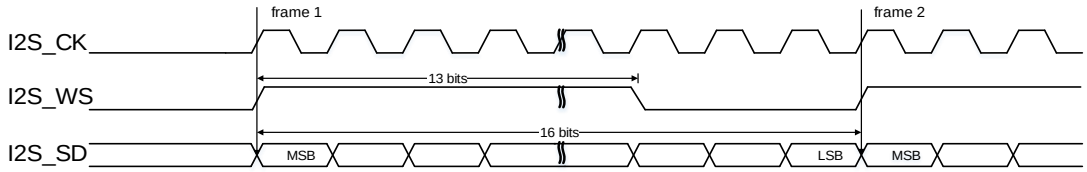

Figure 27-49. PCM standard long frame synchronization mode timing diagram (DTLEN = 00, CHLEN = 0, CKPL = 1)

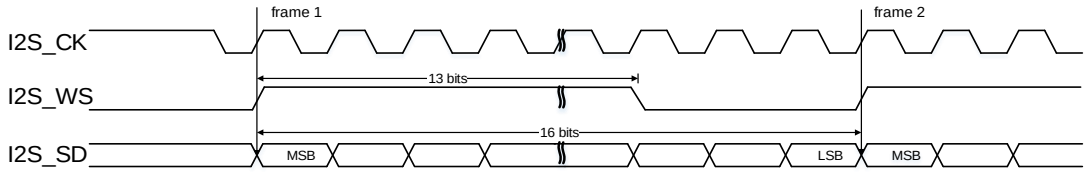

Figure 27-50. PCM standard long frame synchronization mode timing diagram (DTLEN = 10, CHLEN = 1, CKPL = 0)

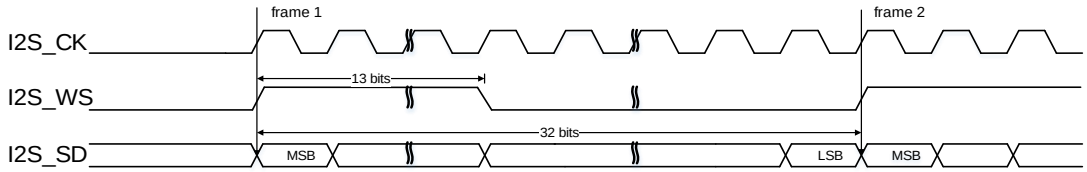

Figure 27-51. PCM standard long frame synchronization mode timing diagram (DTLEN

= 10, CHLEN = 1, CKPL = 1)

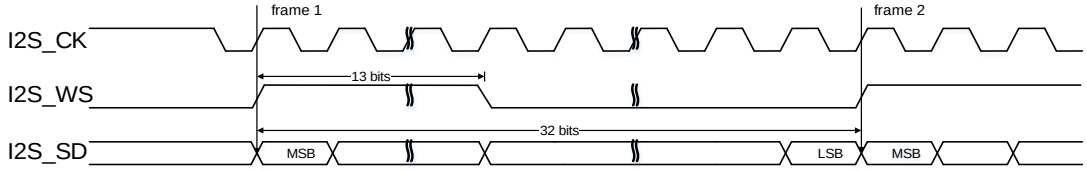

Figure 27-52. PCM standard long frame synchronization mode timing diagram (DTLEN = 01, CHLEN = 1, CKPL = 0)

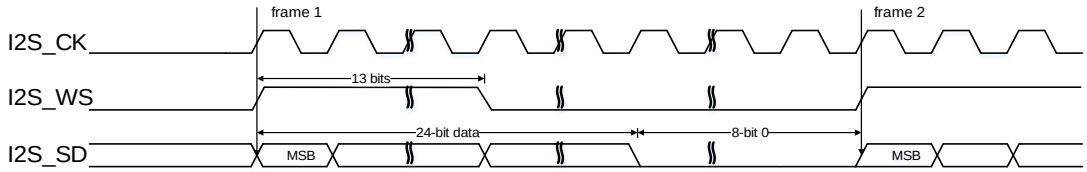

Figure 27-53. PCM standard long frame synchronization mode timing diagram (DTLEN = 01, CHLEN = 1, CKPL = 1)

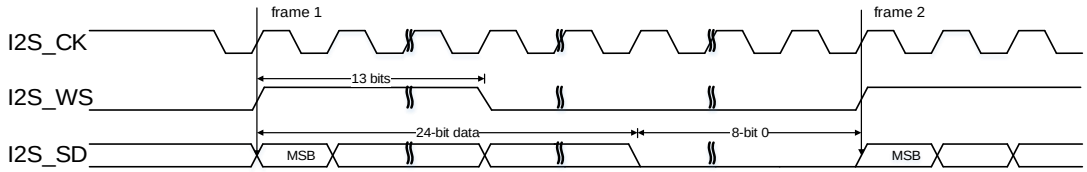

Figure 27-54. PCM standard long frame synchronization mode timing diagram (DTLEN = 00, CHLEN = 1, CKPL = 0)

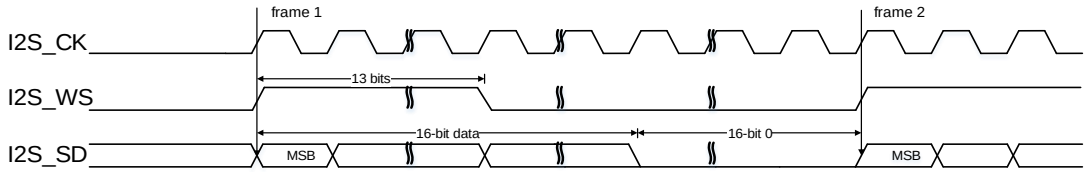

Figure 27-55. PCM standard long frame synchronization mode timing diagram (DTLEN = 00, CHLEN = 1, CKPL = 1)

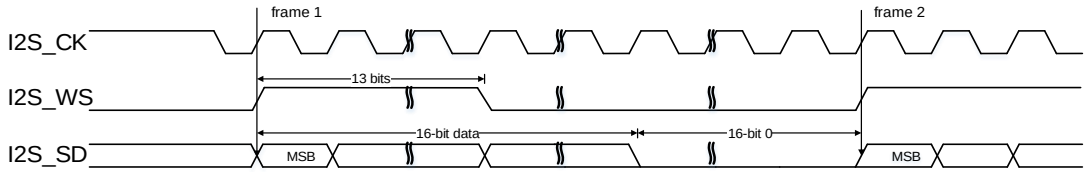

27.4.4. I2S clock

Figure 27-56. Block diagram of I2S clock generator

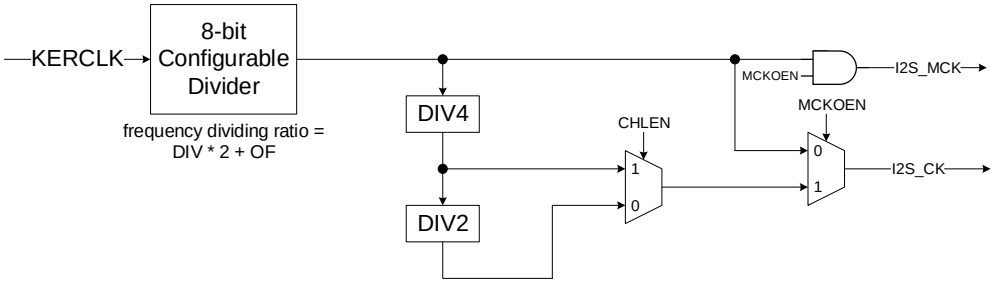

The block diagram of I2S clock generator is shown as ***Figure 27-56. Block diagram of I2S clock generator***. The I2S interface clocks are configured by the DIV bits, the OF bit, the MCKOEN bit and the CHLEN bit in the SPI_I2SCTL register. The source clock is the system clock (CK_SYS). The I2S bitrate can be calculated by the formulas shown in ***Table 27-9. I2S bitrate calculation formulas***.

Table 27-9. I2S bitrate calculation formulas

MCKOEN	CHLEN	Formula
0	0	KERCLK / (DIV * 2 + OF)
0	1	KERCLK / (DIV * 2 + OF)
1	0	KERCLK / (8 * (DIV * 2 + OF))
1	1	KERCLK / (4 * (DIV * 2 + OF))

The relationship between audio sampling frequency (Fs) and I2S bitrate is defined by the following formula:

Fs = I2S bitrate / (number of bits per channel * number of channels)

So, in order to get the desired audio sampling frequency, the clock generator needs to be configured according to the formulas listed in ***Table 27-10. Audio sampling frequency calculation formulas***.

Table 27-10. Audio sampling frequency calculation formulas

MCKOEN	CHLEN	Formula
0	0	KERCLK / (32 * (DIV * 2 + OF))
0	1	KERCLK / (64 * (DIV * 2 + OF))
1	0	KERCLK / (256 * (DIV * 2 + OF))
1	1	KERCLK / (256 * (DIV * 2 + OF))

27.4.5. RxFIFO and TxFIFO

RxFIFO and TxFIFO are used in different directions for I2S data transactions, and they can enable the I2S to work in a continuous flow, and can prevent short data frame length or interrupt/DMA overrun occurs when the delay is too long.

A write access to the SPI_TDATA register stores the written data in the end of TxFIFO, while

a read access to the SPI_RDATA returns the oldest value in RxFIFO which has not been read. In I2S mode, left audio sampling and right audio sampling are interleaved in the FIFO. This means that for the send operation, the user must start filling TxFIFO with left samples and then right samples, and so on. For receive mode, the first data read from RxFIFO is left channel, the next data is the right channel, and so on.

FIFO processing depends on the data length (DTLEN value), the size of the access to the FIFO register (8, 16, or 32 bits). The size of TxFIFO / RxFIFO is 16 x 32 bits and the maximum access data frame length is 32 bits. According to different frame length, the maximum number of frames that can be stored in FIFO is described in ***Table 27-11. The maxinum number of data frame stored in I2SX FIFO***. (N = FIFO size / 32 = 16 x 32 / 32 = 16)

Table 27-11. The maxinum number of data frame stored in I2SX FIFO

Data length (DTLEN)	DTLEN = 16 bit	DTLEN = 24 bit	DTLEN = 32 bit
Frame numbers （WORDEN = 0）	N	-	-
Frame numbers （WORDEN = 1）	2N	N	N

According to the FIFO threshold of programmable can generate interrupts or DMA requests.The influence of FIFOLVL is consistent with SPI.

NOTE: SPI_TDATA and SPI_RDATA data is the default right aligned. Both RxFIFO and TxFIFO content is kept flushed when I2S is disable (I2SEN = 0).

27.4.6. Operation

Operation modes

The operation mode is selected by the I2SOPMOD bits in the SPI_I2SCTL register. There are four available operation modes, including master transmission mode, master reception mode, slave transmission mode, and slave reception mode. The direction of I2S interface signals for each operation mode is shown in the ***Table 27-12. Direction of I2S interface signals for each operation mode***.

Table 27-12. Direction of I2S interface signals for each operation mode

Operation mode	I2S_MCK	I2S_CK	I2S_WS	I2S_SD
Master transmission	Output or NU(1)	Output	Output	Output
Master reception	Output or NU(1)	Output	Output	Input
Slave transmission	Input or NU(1)	Input	Input	Output
Slave reception	Input or NU(1)	Input	Input	Input

(1) NU means the pin is not used by I2S and can be used by other functions.

I2S initialization sequence

I2S initialization sequence contains five steps shown below. In order to initialize I2S working in master mode, all the five steps should be done. In order to initialize I2S to slave mode, only step 2, step 3, step 4, step 5 and step 6 should be done.

- Step 1: Configure the DIV [7:0] bits, the OF bit, and the MCKOEN bit in the SPI_I2SCTL register, in order to define the I2S bitrate and determine whether I2S_MCK needs to be provided or not.
- Step 2: Configure the CKPL in the SPI_I2SCTL register, in order to define the idle state clock polarity.
- Step 3: Configure the FIFO level (FIFOLVL[3:0] bits in the SPI_CFG0 register).
- Step 4: Configure the I2SSEL bit, the I2SSTD [1:0] bits, the PCMSMOD bit, the I2SOPMOD [1:0] bits, the DTLEN [1:0] bits, and the CHLEN bit in the SPI_I2SCTL register to define the I2S feature.
- Step 5: Configure the TPIE bit, the RPIE bit, the TXUREIE bit, the RXOREIE bit, the FEIE bit, the DMATEN bit, and the DMAREN bit, in order to select the potential interrupt sources and the DMA capabilities. This step is optional.
- Step 6: Set the I2SEN bit in the SPI_I2SCTL register to enable I2S.
- Step 7: Activate the serial interface by setting MSTART in the SPI_CTL0 register to 1.

I2S basic transmission and reception sequence

Transmission sequence

After the initialization sequence, the I2S is enabled and stays at idle state. In master mode, the transmission starts when the application writes a data into the TxFIFO. The application should ensure that data is already written into TxFIFO before the transmission starts in slave mode.

When I2S begins to send a data frame, it first loads this data frame from the TxFIFO to the shift register and then begins to transmit the loaded data frame.

Write access to SPI_TDATA is managed by the TP event. With the TP flag set to 1, the application performs an appropriate number of I2S data register writes to transfer the contents of the data package. After uploading the new complete package, the application checks the TP value to check whether TxFIFO can receive additional data packet, if TP = 1, they are uploaded packet by packet until TP reads 0. If the transmission size and packet size are not aligned, when the last number of data packets to be transferred cannot reach the configured size (set by FIFOLVL). The application can still write standard number of previous complete packets to TxFIFO without adverse effects: only consistent data (complete data frames) will pull down to TxFIFO, while redundant write times (or any incomplete data) will be ignored.

In master mode, software should write the next data into SPI_TDATA register before the transmission of current data frame is completed if it desires to generate continuous transmission. As long as there is data in TxFIFO, data delivery continues until TxFIFO becomes empty.

Reception sequence

After the last valid sample clock, the incoming data will be moved from shift register to the

RxFIFO and RP will be set to 1. The application should read SPI_RDATA register to get the received data and this will clear the RP flag automatically when the number of data less than FIFOLVL in RxFIFO.

A read access to SPI_RDATA is managed by the RP event. With the RP flag set to 1, the application performs an appropriate number of SPI data register reads to download a single piece of data contents of the package. After the complete packet is downloaded, the application checks the RP value to see whether there are other packets in the RxFIFO, if any, they are downloaded packet by packet until RP reads 0. At the end of the receive, it may occur that some data is still available in the RxFIFO without reaching the FIFOLVL level, so RP will not be set to 1. In this case, the number of remaining RX data frames in the RxFIFO will be indicated by RWNE and RPLVL in the SPI_STAT register. If the transmission size and packet size are not aligned, the above condition occurs when the last number of data packets to be received cannot reach the configured size (set by FIFOLVL). However, the application can still read standard number of previous complete packets from RxFIFO without adverse effects: only consistent data (complete data frames) will pull up from RxFIFO, while redundant read times (or any incomplete data) will read 0.

I2S disabling sequence

I2S master disabling sequence:

- Step 1: Set the MSPDR bit in the SPI_CTL0 register to stop the data transmission.
- Step 2: Check the MSTART bit in the SPI_CTL0 register until it become 0.
- Step 3: Stop the bus clock and DMA function.
- Step 4: Clear the SPIEN bit in the SPI_CTL0 to stop the I2S peripheral.

I2S slave disabling sequence:

- Step 1: Clear the SPIEN bit in the SPI_CTL0 to stop the I2S peripheral.
- Step 2: Stop the bus clock and DMA function.

27.4.7. DMA function

DMA function is the same as SPI mode. The only difference is that the CRC function is not available in I2S mode.

27.4.8. I2S interrupts

Status flags

There are two status flags implemented in the SPI_STAT register (TP, RP), There is one status flag implemented in the SPI_I2SCTL register (I2SCH). The user can use them to fully monitor the state of the I2S bus.

- **Transmit packet space available flag (TP)**

This bit is set when the TxFIFO have enough available position to accommodate a packet, the software can write the next data packet to the TxFIFO by writing the SPI_TDATA register.

This bit is clearred when the TxFIFO don't have enough space to place in the next packet, the software can not write the next data packet to the TxFIFO by writing the SPI_TDATA register.

- **Receive packet space available flag (RP)**

This bit is set when the RxFIFO is not empty, which means that at leaset one data packet is received and stored in the receive buffer, and software can read the data packet by reading the SPI_RDATA register. This bit is clearred when the RxFIFO is empty or the data stored in the RxFIFO can not reach the FIFOLVL. So software can not read the data packet by reading the SPI_RDATA register when RxFIFO is empty. Or in this case, the number of remaining RX data frames in the RxFIFO will be indicated by RWNE and RPLVL in the SPI_STAT register, the the application can still read standard number of previous complete packets from RxFIFO without adverse effects can still read standard number of previous complete packets from RxFIFO without adverse effects.

- **I2S channel flag (I2SCH)**

This flag indicates the channel side information of the current transfer and has no meaning in PCM mode. It is updated when channel switch in transmission mode or in reception mode. This flag doesn’t generate any interrupt.

Note: because of the existence of FIFO, the change of this bit have no relevant with TP / RP flag, and the change will happen at the end of channel transmission (channel transmission complete, which doesn't mean data transmission complete. For example, channel with 32 bits, data with 16 bits, channel transmission complete on behalf of the 32-bit data completed).

Error conditions

There are three error flags:

- **Receive overrun error (RXORERR)**

The RXORERR bit is set if a data is received when the RxFIFO has not enough space to store this received data. The RxFIFO contents won’t be covered with the newly incoming data, so the newly incoming data is lost. The RXORERR flag triggers an interrupt at RXOREIE is set to 1. The RXORERR can be cleared by writing 1 to the RXORERRC bit of SPI_STATC register.

Note: I2S mode has a hardware mechanism to prevent the error of data interchange between left and right channels due to overrun. For example, data receive sequence is L0->R0->L1->R1->L2->R2->L3->R3... LN->RN (L for left-channel data, R for right-channel data). When the overrun occurs after R1 is received, L2 data is lost. When RxFIFO recovers (which can receive data), the hardware will automatically discard R2 data, and receive L3 data to the left channel, and receive R3 data to the right channel. When the overrun occurs after L2 is received, R2 data is lost. When RxFIFO recovers (which can receive data), the hardware will automatically discard L3 data and receive R3 data to the right channel and receive L4 data to the left channel.

- **Format error (FERR)**

In slave I2S mode, the slave also monitors the I2S_WS signal and set an error flag if it detects an incorrect NSS behavior, for example: toggles at the middle bit of a byte. The FERR flag triggers an interrupt at FEIE is set to 1. The FERR can be cleared by writing 1 to the FERRC bit of SPI_STATC register.

- **Transmit underrun error (TXURERR)**

In slave transfer mode, if the TxFIFO is empty, and need to send new data into the transfer shift register, the TXURERR bit is set. When this happens, at least one data is lost. The TXURERR flag triggers an interrupt at TXUREIE is set to 1. The TXURERR can be cleared by writing 1 to the TXURERRC bit of SPI_STATC register.

Note: I2S mode has a hardware mechanism to prevent the left and right channel data interchange error due to underrun. For example, data transfer sequence is L0->R0->L1->R1->L2->R2->L3->R3... LN->RN (L for left-channel data, R for right-channel data). Current underrun occurs after R1 is sent, L2 data is not timely transferred into TxFIFO resulting in TxFIFO is empty, the hardware will automatically transfer R1 data into the left channel, and then transfer R1 data to the right channel. When L2 data is transferred into TxFIFO, and then transfer L2 data to the left channel, and transfer R2 data to the right channel. When the underrun occurs after L2 is sent, R2 data is not timely transferred into TxFIFO resulting in TxFIFO is empty, the hardware will automatically transfer L2 data to the right channel, and then transfer L2 data to the left channel, when R2 data is transferred into TxFIFO, and then transfer R2 data to the right channel, and then transfer L3 data to the left channel.

I2S interrupt events and corresponding enabled bits are summed up in the ***Table 27-13. I2S interrupt***.

Table 27-13. I2S interrupt

Interrupt flag	Description	Clear method	Interrupt enable bit
TP	Transmit packet space available flag	TP is cleared by hardware when TxFIFO contains less than FIFOLVL empty locations	TPIE
RP	Receive packet space available flag	RP is cleared by hardware when RxFIFO contains less than FIFOLVL empty locations	RPIE
TXURERR	Transmit underrun error	TXURERRC set to 1	TXUREIE
RXORERR	Receive overrun error	RXORERRC set to 1	RXOREIE
FERR	Format error	FERRC set to 1	FEIE

27.5. Register definition

SPI0/I2S0 base address: 0x4001 3000

SPI1/I2S1 base address: 0x4000 3800

SPI2/I2S2 base address: 0x4000 3C00

SPI3 base address: 0x4001 3400

SPI4 base address: 0x4001 5000

SPI5/I2S5 base address: 0x4001 3800

27.5.1. Control register 0 (SPI_CTL0)

Address offset: 0x00
Reset value: 0x0000 0000

This register can be accessed by word (32-bit).

31	30	29	28	27	26	25	24	23	22	21	20	19	18	17	16
Reserved															IOAFEN
															rs

15	14	13	12	11	10	9	8	7	6	5	4	3	2	1	0
TXCRCI	RXCRCI	CRCFS	NSSI	Reserved	MSPDR	MSTART	MASP	Reserved							SPIEN
rw	rw	rw	rw		w	rw	rw								rw

Bits	Fields	Descriptions
31:17	Reserved	Must be kept at reset value.
16	IOAFEN	Related IOs AF configuration enable 0: Related IOs AF configuration is enable 1: Related IOs AF configuration is disable This bit is set by software and cleared by hardware whenever SPIEN bit is changed from 1 to 0. It is cleared and cannot be set when the CONFERR bit is set. This bit will be write protected when SPIEN is set. The SPI_CFG1 register cannot be changed when this bit is set.
15	TXCRCI	The transmitter CRC initialization configuration 0: All 0 mode 1: All 1 mode
14	RXCRCI	The receiver CRC initialization configuration 0: All 0 mode 1: All 1 mode

13	CRCFS	Full scale CRC polynomial configuration 0: Not use full scale CRC polynomial 1: Use full scale CRC polynomial
12	NSSI	The input level of internal NSS signal 0: NSS pin is pulled low 1: NSS pin is pulled high Only when the NSSIM position 1, this bit is valid. This bit values will effect to the peripheral NSS input, and ignore the I/O values of NSS pin.
11	Reserved	Must be kept at reset value.
10	MSPDR	Suspend request in SPI master mode 0: Do not request suspend 1: Request suspend To read this bit is zero. In SPI master mode, if this bit is set by software, SPI communication will be suspended and the MSTART bit will reset when the current frame transfer over. Application should check SPD flag in SPI_STAT register to check the end of transaction. Before SPI disabled, master communication must be suspended (either by setting this bit or emptying the SPI_TDATA register).
9	MSTART	Master start transfer 0: The master transfer is in idle status 1: The master transfer is occurring, or has been temporarily suspended by automatic suspend This bit can be set by software, and can be clearred by hardware when ET flag in SPI_STAT register equal to 1 or when receiving suspend request. In SPI mode, only when SPIEN = 1 and MSTMOD = 1 (in SPI_CFG1 register), this bit can be set. In I2S / PCM mode, only when SPIEN = 1, this bit can be set.
8	MASP	The master is suspended automatically in receive mode 0: SPI stream/clock generation is continuous whether or not an overrun occurs 1: Before the overrun condition is reached, the SPI stream is suspended in the full RxFIFO state. SPD flag (in SPI_STAT register) will set 1 When SPI communication is suspended to prevent an overrun condition, several bits of the next frame may be synchronized out due to an internal synchronization delay. After reading the RxFIFO, communication resumes and subsequent bits transfers continue without any restrictions. For the same reason, automatic suspension is not very reliable when the data size is less than 8 bits. In this case, by combining the insert delay between data frames applied when MDFD parameters remain non-zero value to achieve safe suspension; The sum of data size and interleaving SPI cycles should always result in an interval of at least 8 SPI clock cycles. **NOTE:** MASP can be set only in receiving mode, otherwise it may cause RXORERR (reception overrun) error.

7:1	Reserved	Must be kept at reset value.
0	SPIEN	SPI enable 0: SPI peripheral is disabled 1: SPI peripheral is enabled This bit can be set and cleared by software and can not be set when CONFERR bit is set in SPI_STAT register.

27.5.2. Control register 1 (SPI_CTL1)

Address offset: 0x04

Reset value: 0x0000 0000

This register can be accessed by word (32-bit).

31	30	29	28	27	26	25	24	23	22	21	20	19	18	17	16
TXSER[15:0]															
rs															

15	14	13	12	11	10	9	8	7	6	5	4	3	2	1	0
TXSIZE[15:0]															
rw															

Bits	Fields	Descriptions
31:16	TXSER[15:0]	When previous number of data stored in the TXSIZE has been transferred, it will reload the transmission expansion data amount in the TXSER to TXSIZE. These bits can only be set by the software when its value is zero. After the TXSIZE reload, it is cleared by the hardware. If it is the last time TXSIZE reload, the TXSER counter must to be previously written before CTXSIZE (in SPI_STAT register) counter reaches 1, in addition to this last reload, must program the TXSER value in advance before the CTXSIZE (in SPI_STAT register) counter reaches 1 (or reaches 2 if the CRCEN is set) and CTXSIZE counter is less than the last TXSER value minus 1, otherwise reloads will not be considered and communication will be terminated normally. **NOTE:** TXSER value need to be set greater than 1.
15:0	TXSIZE[15:0]	The current number of data to transfer These bits can be modified by software, and can not be modified when MSTART bit set 1. When TXSIZE is 0, and MSTART is set to 1, it will start endless transmission. When CRC is enable, TXSIZE cannot be set to 0xFFFF / 0x0001.

27.5.3. Configuration register 0 (SPI_CFG0)

Address offset: 0x08

Reset value: 0x0007 0007

This register can be accessed by word (32-bit). When SPI is enable, this register is write

protected, except DMATEN and DMAREN bits.

31	30	29	28	27	26	25	24	23	22	21	20	19	18	17	16
Reserved	PSC[2:0]			Reserved			WORDEN	BYTEN	CRCEN	Reserved	CRCSZ[4:0]				
	rw						rw	rw	rw		rw				

15	14	13	12	11	10	9	8	7	6	5	4	3	2	1	0
DMATEN	DMAREN	Reserved	TXURDT[1:0]		TXUROP[1:0]		FIFOLVL[3:0]				DZ[4:0]				
rw	rw		rw		rw		rw				rw				

Bits	Fields	Descriptions
31	Reserved	Must be kept at reset value.
30:28	PSC[2:0]	Master clock prescaler selection 000: KERCLK / 2 001: KERCLK / 4 010: KERCLK / 8 011: KERCLK / 16 100: KERCLK / 32 101: KERCLK / 64 110: KERCLK / 128 111: KERCLK / 256 **NOTE:** the 000 / 001 configuration of PSC should not be used in Quad-SPI mode. **NOTE:** the 000 configuration of PSC should not be used in TI mode.
27:25	Reserved	Must be kept at reset value.
24	WORDEN	Word access mode enable This bit is used to indicate the width of access to the FIFO, and to generate the threshold of the RxFIFO for the RWNE. 0: According to BYTEN mode 1: Word access mode enable In I2S mode,in order to ensure the stability of channel data, WORDEN is associated with DTLEN. If DTLEN = 0, WORDEN must be 0. If DTLEN > 0, WORDEN must be 1.
23	BYTEN	Byte access mode enable This bit is used to indicate the width of access to the FIFO, and to generate the threshold of the RxFIFO for the RWNE. 0: Halfword access mode enable 1: Byte access mode enable in I2S mode, BYTEN must always be 0 to ensure stable channel data..
22	CRCEN	CRC calculation enable 0: CRC calculation is disabled 1: CRC calculation is enabled

21	Reserved	Must be kept at reset value.
20:16	CRCSZ[4:0]	CRC size This bit fields must be equal to DZ value or multiples of DZ value. 00000: Not use 00001: Not use 00010: Not use 00011: 4-bit 00100: 5-bit 00101: 6-bit ….. 11101: 30-bit 11110: 31-bit 11111: 32-bit
15	DMATEN	Transmit buffer DMA enable 0: Transmit buffer DMA is disabled 1: Transmit buffer DMA is enabled
14	DMAREN	Receive buffer DMA enable 0: Receive buffer DMA is disabled 1: Receive buffer DMA is enabled
13	Reserved	Must be kept at reset value.
12:11	TXURDT[1:0]	Detection of underrun error at slave transmitter 00: The underrun detected condition is set at the beginning of the data frame (no first bit protection) 01: The underrun detected condition is set at the end of last data frame 10: The underrun detected condition is set at the beginning of NSS signal 11: Reserved
10:9	TXUROP[1:0]	Operation of slave transmitter when underrun detected 00: Slave send a constant value defined by the SPI_URDATA register 01: Slave send the data frame received from master lastly 10: Slave send the data frame which is lastly transmitted by itself. (This data frame is stored in its TxFIFO) 11: Reserved
8:5	FIFOLVL[3:0]	FIFO threshold level These bits show the number of data frames in a single packet. The size of the packet should not exceed half of the FIFO space. 0000: 1-data frame 0001: 2-data frame 0010: 3-data frame 0011: 4-data frame ….

		1101: 14-data frame 1110: 15-data frame 1111: 16-data frame The SPI interface is more efficient if the configured packet size is aligned with the parallel bits of data register access. It is best to choose FIFOLVL from 2, 4, 6 etc when DZ <= 8 bits and the SPI data register is accessed by half-word. If DZ > 8 bits and the SPI data register is accessed by word, it is best to choose FIFOLVL from 2, 4, 6 etc. While if DZ <= 8 bits, it is best to choose FIFOLVL from 4, 8, 12 etc.
4:0	DZ[4:0]	Date size These bits configure the number of bits in a data frame: 00000: Reserved 00001: Reserved 00010: Reserved 00011: 4-bit (When data width is 4 bit, must use the word / half word access FIFO, otherwise there is a risk of data disorder) 00100: 5-bit 00101: 6-bit 00110: 7-bit …… 11101: 30-bit 11110: 31-bit 11111: 32-bit

27.5.4. Configuration register 1 (SPI_CFG1)

Address offset: 0x0C
Reset value: 0x0000 0000

This register can be accessed by word (32-bit). When SPI is enable or IOAFEN bit is set to 1, this register is write protected.

31	30	29	28	27	26	25	24	23	22	21	20	19	18	17	16
AFCTL	NSSCTL	NSSDRV	NSSIOPL	Reserved	NSSIM	CKPL	CKPH	LF	MSTMOD	TMOD	Reserved		BDEN	BDOEN	RO
rw	rw	rw	rw		rw	rw	rw	rw	rw	rw			rw	rw	rw

15	14	13	12	11	10	9	8	7	6	5	4	3	2	1	0
SWPMIO	Reserved							MDFD[3:0]				MSSD[3:0]			
rw								rw				rw			

Bits	Fields	Descriptions
31	AFCTL	AF GPIOs control This bit can be set or cleared when SPI is disable. 0: Peripherals do not control GPIO pins when disabled 1: Peripherals always control all associated GPIO pins

		When the SPI master must be temporarily disabled for specific configuration reasons (such as CRC reset, or CKPH change), setting this bit to 1 forces the relevant output configured for alternate function mode to the state corresponding to the current SPI configuration to prevent an exit burr. In slave mode, this bit should not be used, because any slave transmitter cannot enforce its MISO output once the SPI is disabled.
30	NSSCTL	NSS pin output control in master mode 0: The NSS remains active level until the data transfer is complete, after that becomes inactive level via the ET flag 1: When MDFD[3:0] > 1, SPI data frames are interleaved with NSS invalid pulses
29	NSSDRV	NSS pin output enable in master mode 0: Output disable 1: Output enable
28	NSSIOPL	NSS pin input/output polarity selection 0: Low level is active 1: High level is active
27	Reserved	Must be kept at reset value.
26	NSSIM	NSS input signal manage mode 0: The NSS PAD decides the NSS input value 1: The NSSI bit of SPI_CTL0 decides the NSS input value
25	CKPL	Clock polarity selection 0: CLK pin is pulled low when SPI is in idle status 1: CLK pin is pulled high when SPI is in idle status
24	CKPH	Clock phase selection 0: Capture the first data at the first clock transition 1: Capture the first data at the second clock transition
23	LF	LSB first mode 0: Transmit MSB first 1: Transmit LSB first This bit has no meaning in SPI TI mode.
22	MSTMOD	Master mode enable 0: Slave mode 1: Master mode
21	TMOD	SPI TI mode enable 0: SPI TI mode disabled 1: SPI TI mode enabled
20:19	Reserved	Must be kept at reset value.
18	BDEN	Bidirectional enable

		0: 2 line unidirectional transmit mode 1: 1 line bidirectional transmit mode. The information transfers between the MOSI pin in master and the MISO pin in slave
17	BDOEN	Bidirectional transmit output enable When BDEN is set, this bit determines the direction of transfer. 0: Work in receive-only mode 1: Work in transmit-only mode
16	RO	Receive only When BDEN is cleared, this bit determines the direction of transfer. 0: Full-duplex mode 1: Receive-only mode
15	SWPMIO	MOSI and MISO pin swap 0: No swap 1: Swap When this bit is set to 1, MISO and MOSI pin alternate functions are switched.
14:8	Reserved	Must be kept at reset value.
7:4	MDFD[3:0]	Delay between the data frames in SPI master mode 0000: No delay 0001: 1 clock cycle delay …. 1111: 15 clock cycle delay This bit has no meaning in SPI TI mode.
3:0	MSSD[3:0]	Delay between active edge of NSS and start transfer or receive data in SPI master mode 0000: No delay 0001: 1 clock cycle delay …. 1111: 15 clock cycle delay This bit has no meaning in SPI TI mode.

27.5.5. Interrupt register (SPI_INT)

Address offset: 0x10

Reset value: 0x0000 0000

This register can be accessed by half-word (16-bit) or word (32-bit).

31	30	29	28	27	26	25	24	23	22	21	20	19	18	17	16
Reserved															

15	14	13	12	11	10	9	8	7	6	5	4	3	2	1	0
Reserved					TXSERFIE	CONFEIE	FEIE	CRCERIE	RXOREIE	TXUREIE	TXFIE	ESTCIE	DPIE	TPIE	RPIE

rw	rw	rw	rw	rw	rw	rw	rw	rw	rw	rw

Bits	Fields	Descriptions
31:11	Reserved	Must be kept at reset value.
10	TXSERFIE	TXSER reload interrupt enable 0: TXSER interrupt disable 1: TXSER interrupt enable
9	CONFEIE	SPI configuration error interrupt enable 0: SPI configuration error interrupt disable 1: SPI configuration error interrupt enable
8	FEIE	TI frame error interrupt enable 0: TI frame error interrupt disable 1: TI frame error interrupt enable
7	CRCERIE	CRC error interrupt enable 0: CRC error interrupt disable 1: CRC error interrupt enable
6	RXOREIE	Overrun error interrupt enable 0: Overrun interrupt disable 1: Overrun interrupt enable
5	TXUREIE	Underrun error interrupt enable 0: Underrun interrupt disable 1: Underrun interrupt enable
4	TXFIE	Transmission filled interrupt enable 0: TXF interrupt disable 1: TXF interrupt enable
3	ESTCIE	End of transfer or suspend or TxFIFO clear interrupt enable 0: ESTC interrupt disable 1: ESTC interrupt enable
2	DPIE	DP interrupt enable 0: DP interrupt disable 1: DP interrupt enable This bit can be set by software, and will be cleared when TXF is set to 1.
1	TPIE	TP interrupt enable 0: TP interrupt disable 1: TP interrupt enable This bit can be set by software, and will be cleared when TXF is set to 1.
0	RPIE	RP interrupt enable 0: RP interrupt disable

1: RP interrupt enable

27.5.6. Status register (SPI_STAT)

Address offset: 0x14

Reset value: 0x0000 1002

This register can be accessed by word (32-bit).

31	30	29	28	27	26	25	24	23	22	21	20	19	18	17	16
CTXSIZE[15:0]															
r															

15	14	13	12	11	10	9	8	7	6	5	4	3	2	1	0
RWNE	RPLVL[1:0]		TC	SPD	TXSERF	CONFERR	FERR	CRCERR	RXORERR	TXURERR	TXF	ET	DP	TP	RP
r	r		r	r	r	r	r	r	r	r	r	r	r	r	r

Bits	Fields	Descriptions
31:16	CTXSIZE[15:0]	These bits show the number of data frames remaining in the TXSIZE bit feild (in the SPI_CTL1 register). This value is not very reliable when there is data transmission on the bus.
15	RWNE	The word of RxFIFO is not empty 0: Data takes RxFIFO space less than a word (32-bit) 1: Data takes RxFIFO space at least a word (32-bit)
14:13	RPLVL[1:0]	RxFIFO packet level These bits define the number of data frames stored in the last 32-bit word area of RxFIFO. If the size of data frame <= 8 bit (DZ[4:0] <= 7): 00: there are no frame (RWNE = 0) or multiple of 4 farmes (RWNE = 1) stored in RxFIFO 01: there is 1 frame stored in RxFIFO (RWNE = 0) 10: there are 2 frames stored in RxFIFO (RWNE = 0) 11: there are 3 frames stored in RxFIFO (RWNE = 0) If the size of data frame > 8 bit and <= 16 bit (7 < DZ[4:0] <= 15): 00: there are no frame (RWNE = 0) or multiple of 2 farmes (RWNE = 1) stored in RxFIFO 01: there is 1 frame stored in RxFIFO (RWNE = 0) Other: not used. If the size of data frame > 16 bit (DZ[4:0] > 15): 00: only read Other: not used.
12	TC	TxFIFO transmission complete flag

		0: There are data stored in TxFIFO, or the last frame is sent ongoing (including CRC) 1: The last data or CRC frame is sent complete
11	SPD	Suspend flag 0: SPI is not suspended 1: SPI master mode is suspended
10	TXSERF	The additional SPI data has been reloaded 0: no data accepted 1: The current transaction continues after receiving an additional number of data This bit can be cleared by write 1 to TXSERFC bit (in SPI_STATC register) or program TXSER bits (in SPI_CTL1 register).
9	CONFERR	SPI configuration error 0: No configuration error 1: Configuration error occurred
8	FERR	SPI TI format error 0: No TI format error 1: TI format error occurs
7	CRCERR	SPI CRC error 0: No CRC error 1: CRC error occurs
6	RXORERR	Reception overrun error 0: No reception overrun error 1: Reception overrun error occurs
5	TXURERR	Transmission underrun error 0: No transmission underrun error 1: Transmission underrun error occurred
4	TXF	TxFIFO transmission has been filled 0: TxFIFO upload ongoing or not start 1: TxFIFO upload complete
3	ET	End of transmission / reception flag 0: Transmission / reception ongoing or not start 1: Transmission / reception complete
2	DP	Duplex packet 0: TxFIFO is full and / or RxFIFO is empty 1: TxFIFO has space to write a complete data frame (TP = 1) and RxFIFO contains at least one packet to read (RP = 1)
1	TP	TxFIFO packet space available flag 0: TxFIFO don't have enough space to receive the next packet

		1: TxFIFO have enough available space to receive a packet
0	RP	RxFIFO packet space available flag 0: The RxFIFO is empty or the received packet is incomplete (not reach at FIFOLVL) 1: RxFIFO contains at least one complete packet

27.5.7. Interrupt/Status flags clear register (SPI_STATC)

Address offset: 0x18

Reset value: 0x0000 0000

This register can be accessed half-word (16-bit) or by word (32-bit).

31	30	29	28	27	26	25	24	23	22	21	20	19	18	17	16
Reserved															

15	14	13	12	11	10	9	8	7	6	5	4	3	2	1	0
Reserved				SPDC	TXSERFC	CONFERRC	FERRC	CRCERRC	RXORERRC	TXURERRC	TXFC	ETC	Reserved		
				w	w	w	w	w	w	w	w	w			

Bits	Fields	Descriptions
31:12	Reserved	Must be kept at reset value.
11	SPDC	Clear the suspend flag Write 1 to this bit can clear the SPD bit in the SPI_STAT register.
10	TXSERFC	Clear the TXSERF flag Write 1 to this bit can clear the TXSERF bit in the SPI_STAT register.
9	CONFERRC	Clear the configuration error flag Write 1 to this bit can clear the CONFERR bit in the SPI_STAT register.
8	FERRC	Clear the SPI TI format error flag Write 1 to this bit can clear the FERR bit in the SPI_STAT register.
7	CRCERRC	Clear the CRC error flag Write 1 to this bit can clear the CRCERR bit in the SPI_STAT register.
6	RXORERRC	Clear the reception overrun error flag Write 1 to this bit can clear the RXORERR bit in the SPI_STAT register.
5	TXURERRC	Clear the transmission underrun error flag Write 1 to this bit can clear the TXURERR bit in the SPI_STAT register.
4	TXFC	Clear the TxFIFO transmission filled flag Write 1 to this bit can clear the TXF bit in the SPI_STAT register.

3	ETC	Clear the end of transmission/reception flag Write 1 to this bit can clear the ET bit in the SPI_STAT register.
2:0	Reserved	Must be kept at reset value.

27.5.8. Data Transfer register (SPI_TDATA)

Address offset: 0x20

Reset value: 0x0000 0000

This register can be accessed by byte (8-bit) or half-word (16-bit) or word (32-bit).

31	30	29	28	27	26	25	24	23	22	21	20	19	18	17	16
TDATA[31:16]															
w															

15	14	13	12	11	10	9	8	7	6	5	4	3	2	1	0
TDATA[15:0]															
w															

Bits	Fields	Descriptions
31:0	TDATA[31:0]	Data transfer register The hardware has two FIFOs, including TxFIFO and RxFIFO. The SPI_TDATA register serves as an interface with TxFIFO. Write data to SPI_TDATA will save the data to TxFIFO. Data is always right-aligned, and according to WORDEN, BYTEN, DZ value to place data. For example: if WORDEN is set 1, DZ is 8-bit, TDATA [7:0] is data 0, TDATA [15:8] is data 1, TDATA [23:16] is data 2, TDATA [31:24] is data 3. If WORDEN is set 0, BYTEN is set 0, DZ is 8-bit, TDATA [7:0] is data 0, TDATA [15:8] is data 1, TDATA [31:16] is invalid data. If WORDEN is set 0, BYTEN is set 1, DZ is 8-bit, TDATA [7:0] is data 0, TDATA [31:8] is invalid data. If DZ is more than 8-bit, only according to the word or half word access.

27.5.9. Data Receive register (SPI_RDATA)

Address offset: 0x30

Reset value: 0x0000 0000

This register can be accessed by byte (8-bit) or half-word (16-bit) or word (32-bit).

31	30	29	28	27	26	25	24	23	22	21	20	19	18	17	16
RDATA[31:16]															
r															

15	14	13	12	11	10	9	8	7	6	5	4	3	2	1	0
RDATA[15:0]															
r															

Bits	Fields	Descriptions

31:0	RDATA[31:0]	Data receive register The hardware has two FIFOs, including TxFIFO and RxFIFO. The SPI_RDATA register serves as an interface with RxFIFO. Read data from SPI_RDATA will get the data from RxFIFO. Data is always right-aligned, and according to WORDEN, BYTEN, DZ value to place data. For example: if WORDEN is set 1, DZ is 8-bit, RDATA [7:0] is data 3, RDATA [15:8] is data 2, RDATA [23:16] is data 1, RDATA [31:24] is data 0. If WORDEN is set 0, BYTEN is set 0, DZ is 8-bit, RDATA [15:0] is invalid data , RDATA [23:16] is data 1, RDATA [31:24] is data 0. If WORDEN is set 0, BYTEN is set 1, DZ is 8-bit, RDATA [23:0] is invalid data , RDATA [31:24] is data 0. If DZ is more than 8-bit, only according to the word or half word access.

27.5.10. CRC polynomial register (SPI_CRCPOLY)

Address offset: 0x40

Reset value: 0x0000 0107

This register can be accessed by word (32-bit). When SPI is enable, this register is write protected.

31	30	29	28	27	26	25	24	23	22	21	20	19	18	17	16
CRCPOLY[31:16]															
rw															

15	14	13	12	11	10	9	8	7	6	5	4	3	2	1	0
CRCPOLY[15:0]															
rw															

Bits	Fields	Descriptions
31:0	CRCPOLY[31:0]	CRC polynomial register This register contains the CRC polynomial and it is used for CRC calculation. The default value of 0x107 is corresponding to DZ = 8-bit. It is compatible with some other GD products with fixed length polynomial string (use the default value 0x07). The polynomial length is defined by the most significant bit of SPI_CRCPOLY register. The length value should be greater than the DZ value. In addition, if DZ = 32-bit or DZ = 16-bit, the CRCFS must be set to 1 to make sure the size of polynomial greater than the size of data. If DZ = 16-bit, the 16-31 bit fields of SPI_CRCPOLY register should be reserved. When the register is accessed by word (32-bit), the 16-31 bit fields always read zero, and write invalid.

27.5.11. TX CRC register (SPI_TCRC)

Address offset: 0x44

Reset value: 0x0000 0000

This register can be accessed by word (32-bit).

31	30	29	28	27	26	25	24	23	22	21	20	19	18	17	16
TCRC[31:16]															
r															

15	14	13	12	11	10	9	8	7	6	5	4	3	2	1	0
TCRC[15:0]															
r															

Bits	Fields	Descriptions
31:0	TCRC[31:0]	Tx CRC register. When the CRCEN bit of SPI_CFG0 is set, the hardware computes the CRC value of the transmitted bytes and saves them in SPI_TCRC register. These bits have no meaning in I2S mode.

27.5.12. RX CRC register (SPI_RCRC)

Address offset: 0x48

Reset value: 0x0000 0000

This register can be accessed by word (32-bit).

31	30	29	28	27	26	25	24	23	22	21	20	19	18	17	16
RCRC[31:16]															
r															

15	14	13	12	11	10	9	8	7	6	5	4	3	2	1	0
RCRC[15:0]															
r															

Bits	Fields	Descriptions
31:0	RCRC[31:0]	Rx CRC register. When the CRCEN bit of SPI_CFG0 is set, the hardware computes the CRC value of the received bytes and saves them in SPI_RCRC register. These bits have no meaning in I2S mode.

27.5.13. Underrun Data register (SPI_URDATA)

Address offset: 0x4C

Reset value: 0x0000 0000

This register can be accessed by word (32-bit). When SPI is enable, this register is write protected.

31	30	29	28	27	26	25	24	23	22	21	20	19	18	17	16
URDATA[31:16]															
rw															

15	14	13	12	11	10	9	8	7	6	5	4	3	2	1	0
URDATA[15:0]															
rw															

Bits	Fields	Descriptions
31:0	URDATA[31:0]	Transmission underrun data at slave mode. This register is considered only in slave mode and underrun conditions. The number of bits considered depends on the DZ bits setting of SPI_CFG0 register. The treatment of the underrun condition depends on the TXURDT and TXUROP bits of the SPI_CFG0 register.

27.5.14. I2S control register (SPI_I2SCTL)

Address offset: 0x50

Reset value: 0x0000 0000

This register can be accessed by word (32-bit).

31	30	29	28	27	26	25	24	23	22	21	20	19	18	17	16
I2SCH	Reserved					MCKOEN	OF	DIV[7:0]							
r						rw	rw	rw							

15	14	13	12	11	10	9	8	7	6	5	4	3	2	1	0
Reserved				I2SSEL	I2SEN	I2SOPMOD[1:0]		PCMSMOD	Reserved	I2SSTD[1:0]		CKPL	DTLEN[1:0]		CHLEN
				rw	rw	rw		rw		rw		rw	rw		rw

Bits	Fields	Descriptions
31	I2SCH	I2S channel side 0: The next data needs to be transmitted or the data just received is channel left. 1: The next data needs to be transmitted or the data just received is channel right. This bit is set and cleared by hardware. This bit is not used in SPI mode, and has no meaning in the I2S PCM mode. For TX, this bit is meaningful only if FIFOLVL = 15, that is, TxFIFO is only used for sending 1 data. For RX, this bit is meaningful only if FIFOLVL = 0, that is, RXFIFO is used for receiving only one data. For other configurations, the bit has no clear meaning.
30:26	Reserved	Must be kept at reset value.
25	MCKOEN	I2S_MCK output enable 0: I2S_MCK output is disabled 1: I2S_MCK output is enabled This bit should be configured when I2S mode is disabled. This bit is not used in SPI mode.
24	OF	Odd factor for the prescaler 0: Real divider value is DIV * 2 1: Real divider value is DIV * 2 + 1 This bit should be configured when I2S mode is disabled.

		This bit is not used in SPI mode.
23:16	DIV[7:0]	Dividing factor for the prescaler Real divider value is DIV * 2 + OF. DIV must not be 0. These bits should be configured when I2S mode is disabled. These bits are not used in SPI mode.
15:12	Reserved	Must be kept at reset value.
11	I2SSEL	I2S mode selection 0: SPI mode 1: I2S mode This bit should be configured when SPI/I2S is disabled.
10	I2SEN	I2S enable 0: I2S is disabled 1: I2S is enabled This bit is not used in SPI mode.
9:8	I2SOPMOD[1:0]	I2S operation mode 00: Slave transmission mode 01: Slave reception mode 10: Master transmission mode 11: Master reception mode This bit should be configured when I2S mode is disabled. This bit is not used in SPI mode.
7	PCMSMOD	PCM frame synchronization mode 0: Short frame synchronization 1: long frame synchronization This bit has a meaning only when PCM standard is used. This bit should be configured when I2S mode is disabled. This bit is not used in SPI mode.
6	Reserved	Must be kept at reset value.
5:4	I2SSTD[1:0]	I2S standard selection 00: I2S Philips standard 01: MSB justified standard 10: LSB justified standard 11: PCM standard These bits should be configured when I2S mode is disabled. These bits are not used in SPI mode.
3	CKPL	Idle state clock polarity 0: The idle state of I2S_CK is low level 1: The idle state of I2S_CK is high level

		This bit should be configured when I2S mode is disabled. This bit is not used in SPI mode.
2:1	DTLEN[1:0]	Data length 00: 16-bit 01: 24-bit 10: 32-bit 11: Reserved These bits should be configured when I2S mode is disabled. These bits are not used in SPI mode.
0	CHLEN	Channel length 0: 16-bit 1: 32-bit The channel length must be equal to or greater than the data length. This bit should be configured when I2S mode is disabled. This bit is not used in SPI mode.

27.5.15. Quad_SPI mode control register (SPI_QCTL)

Address offset: 0x80

Reset value: 0x0000 0000

This register can be accessed by half-word (16-bit) or word (32-bit).

31	30	29	28	27	26	25	24	23	22	21	20	19	18	17	16
Reserved															

15	14	13	12	11	10	9	8	7	6	5	4	3	2	1	0
Reserved													IO23_DRV	QRD	QMOD
													rw	rw	rw

Bits	Fields	Descriptions
31:3	Reserved	Must be kept at reset value
2	IO23_DRV	Drive IO2 and IO3 enable 0: IO2 and IO3 are not driven in single wire mode 1: IO2 and IO3 are driven to high in single wire mode This bit is only available in SPI3 / 4.
1	QRD	Quad-SPI mode read select 0: SPI is in quad wire write mode 1: SPI is in quad wire read mode This bit should be only be configured when SPI is not busy. This bit is only available in SPI3 / 4.

0	QMOD	Quad-SPI mode enable 0: SPI is in single wire mode 1: SPI is in Quad-SPI mode This bit should only be configured when SPI is not busy. This bit is only available in SPI3 / 4.

27.5.16. RX clock delay register (SPI_RXDLYCK)

Address offset: 0xFC

Reset value: 0x0000 0000

This register can be accessed by half-word (16-bit) or word (32-bit).

31	30	29	28	27	26	25	24	23	22	21	20	19	18	17	16
Reserved															

15	14	13	12	11	10	9	8	7	6	5	4	3	2	1	0
Reserved				MRXDEN	MRXD[4:0]					SRXDEN	SRXD[4:0]				
				rw	rw					rw	rw				

Bits	Fields	Descriptions
31:12	Reserved	Must be kept at reset value
11	MRXDEN	When master receive, sampling clock delay enable 0: Sampling clock delay enable 1: Sampling clock delay disable
10:6	MRXD[4:0]	When master receive, sampling clock delay units 00000: Delay 1 unit 00001: Delay 2 units … 11111: Delay 32 units
5	SRXDEN	When slave receive, sampling clock delay enable 0: Sampling clock delay enable 1: Sampling clock delay disable
4:0	SRXD[4:0]	When slave receive, sampling clock delay units 00000: Delay 1 unit 00001: Delay 2 units … 11111: Delay 32 units

28. OSPI I/O manager(OSPIM)

28.1. Overview

OSPIM supports OSPI pin assignment with full matrix.

28.2. Characteristics

- Support two SPI(single-line, two-lines, four-lines, eight-lines) interfaces.
- Support two ports for pin assignment.
- Fully programmable IO matrix, can assign pins according to function.

28.3. Function overview

28.3.1. OSPIM block diagram

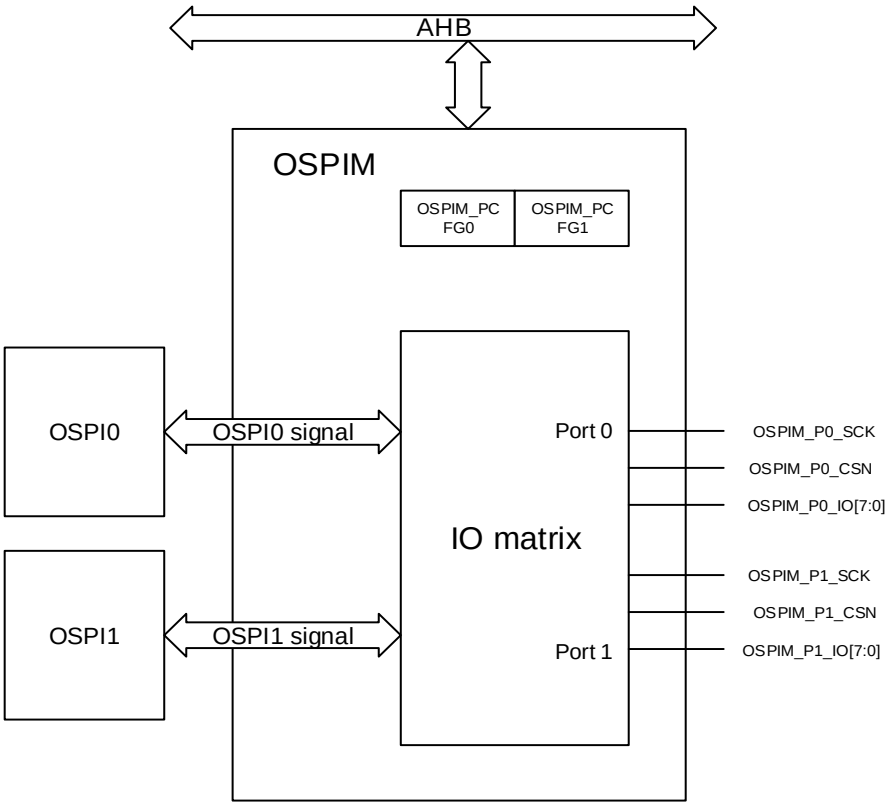

28.3.2. OSPIM matrix

The OSPIM matrix is fully programmable, and the pins can be pre-mapped according to function, as shown in the ***Table 28-1 OSPIM matrix mapping***:

Table 28-1 OSPIM matrix mapping

Pins	Mapping
OSPIM_P0_SCK, OSPIM_P1_SCK	Can be independently mapped to OSPI0_SCK or OSPI1_SCK
OSPIM_P0_DQS, OSPIM_P1_DQS	Can be independently mapped to OSPI0_DQS or OSPI1_DQS
OSPIM_P0_CSN, OSPIM_P1_CSN	Can be independently mapped to OSPI0_CSN or OSPI1_CSN
OSPIM_P0_IO[3:0], OSPIM_P0_IO[7:4], OSPIM_P1_IO[3:0], OSPIM_P1_IO[7:4]	Can be independently mapped to OSPIM0_IO[3:0], OSPIM0_IO[7:4], OSPIM1_IO[3:0] or OSPIM1_IO[7:4]

By default, the signals of OSPI0 and OSPI1 are mapped to port 0 and port 1, respectively. Port 0 and port 1 of OSPIM can be independently configured through OSPIM_PCFGx register. If OSPIs are disabled, the OSPIM matrix must be configured to avoid unexpected transactions on the bus.

28.4. Register definition

OSPIM base address: 0x5200 B400

28.4.1. Port configuration register (OSPIM_PCFGx) (x = 0, 1)

Address offset: 0x04*(x+1)

Reset value: 0x0301 0111 (x = 0), 0x0705 0333 (x=1)

This register can be accessed by word (32-bit).

31	30	29	28	27	26	25	24	23	22	21	20	19	18	17	16
Reserved					SRCPHIO[1:0]		POHEN	Reserved					SRCPLIO[1:0]		POLEN
					rw		rw						rw		rw

15	14	13	12	11	10	9	8	7	6	5	4	3	2	1	0
Reserved						SRCPCS	NCSEN	Reserved						SRCPCK	SCKEN
						rw	rw							rw	rw

Bits	Fields	Descriptions
31:27	Reserved	Must be kept at reset value.
26:25	SRCPHIO[1:0]	Source selection for IO[7:4] of port x 00: Select OSPI0_IO[3:0]. 01: Select OSPI0_IO[7:4]. 10: Select OSPI1_IO[3:0]. 11: Select OSPI1_IO[7:4].
24	POHEN	Enable for IO[7:4] of port x

		0: Disable IO[7:4] of port x. 1: Enable IO[7:4] of port x.
23:19	Reserved	Must be kept at reset value.
18:17	SRCPLIO[1:0]	Source selection for IO[3:0] of port x 00: Select OSPI0_IO[3:0]. 01: Select OSPI0_IO[7:4]. 10: Select OSPI1_IO[3:0]. 11: Select OSPI1_IO[7:4].
16	POLEN	Enable for IO[3:0] of port x 0: Disable IO[3:0] of port x. 1: Enable IO[3:0] of port x.
15:10	Reserved	Must be kept at reset value.
9	SRCPCS	Source selection for CSN of port x 0: The source of CSN is OSPI0_CSN 1: The source of CSN is OSPI1_CSN
8	NCSEN	Enable for CSN of port x 0: Disable CSN of port x 1: Enable CSN of port x
7:2	Reserved	Must be kept at reset value.
1	SRCPCK	Source selection for SCK of port x 0: The source of SCK is OSPI0_SCK 1: The source of SCK is OSPI1_SCK
0	SCKEN	Enable for SCK of port x 0: Disable SCK of port x 1: Enable SCK of port x

29. Octal-SPI interface(OSPI)

29.1. Overview

The OSPI is a specialized interface that communicate with external memories. The interface support single, dual, quad and octal SPI mode.

29.2. Characteristics

- Three functional modes:
  - indirect mode: all operations are performed depends on OSPI registers.
  - status polling mode: the values of status registers in external memory are periodically read and check.
  - memory-mapped mode: the external memory is mapped to the microcontroller address space(OSPI0: 0x9000 0000 – 0x9FFF FFFF, OSPI1: 0x7000 0000 – 0x7FFF FFFF) and is accessed as an internal memory.
- Support read in memory-mapped mode.
- Support single, dual, quad and octal communication.
- Fully programmable command format for both indirect and memory-mapped mode.
- Support SDR(signal data rate) and DTR(double transfer rate, only for GD25LX512ME read).
- Integrated FIFO for transmission/reception.
- 8, 16 and 32-bits data access.
- DMA channel for indirect mode.
- Interrupt generation on FIFO threshold, status match, transfer complete and access error.

29.3. Functon overview

29.3.1. OSPI block diagram

The pins of OSPI are described in the table below.

Table 29-1 OSPI signal description

Pin name	Direction	Description
CSN	O	chip select output(active low)
SCK	O	clock output
IO0/SO	I/O	single mode: data output. dual mode: data input or output. qual mode: data input or output. octal mode: data input or output.
IO1/SI	I/O	single mode: data intput.

Pin name	Direction	Description
		dual mode: data input or output. qual mode: data input or output. octal mode: data input or output.
IO2	I/O	single mode: ouptput mode and forced to 0, connect WP pin of external memories, control “write protect” function. dual mode: ouptput mode and forced to 0, connect WP pin of external memories, control “write protect” function. quad mode: data input or output. octal mode: data input or output.
IO3	I/O	single mode: output mode and forced to 1, connect HOLD pin of external memories, control “hold” function. dual mode: output mode and forced to 1, connect HOLD pin of external memories, control “hold” function. quad mode: data input or output. octal mode: data input or output.
IO4	I/O	single mode: output mode and forced to 0. dual mode: output mode and forced to 0. quad mode: output mode and forced to 0. octal mode: data input or output.
IO5	I/O	single mode: output mode and forced to 0. dual mode: output mode and forced to 0. quad mode: output mode and forced to 0. octal mode: data input or output.
IO6	I/O	single mode: output mode and forced to 0. dual mode: output mode and forced to 0. quad mode: output mode and forced to 0. octal mode: data input or output.
IO7	I/O	single mode: output mode and forced to 0. dual mode: output mode and forced to 0. quad mode: output mode and forced to 0. octal mode: data input or output.

Figure 29-1 OSPI octal communication mode block diagram

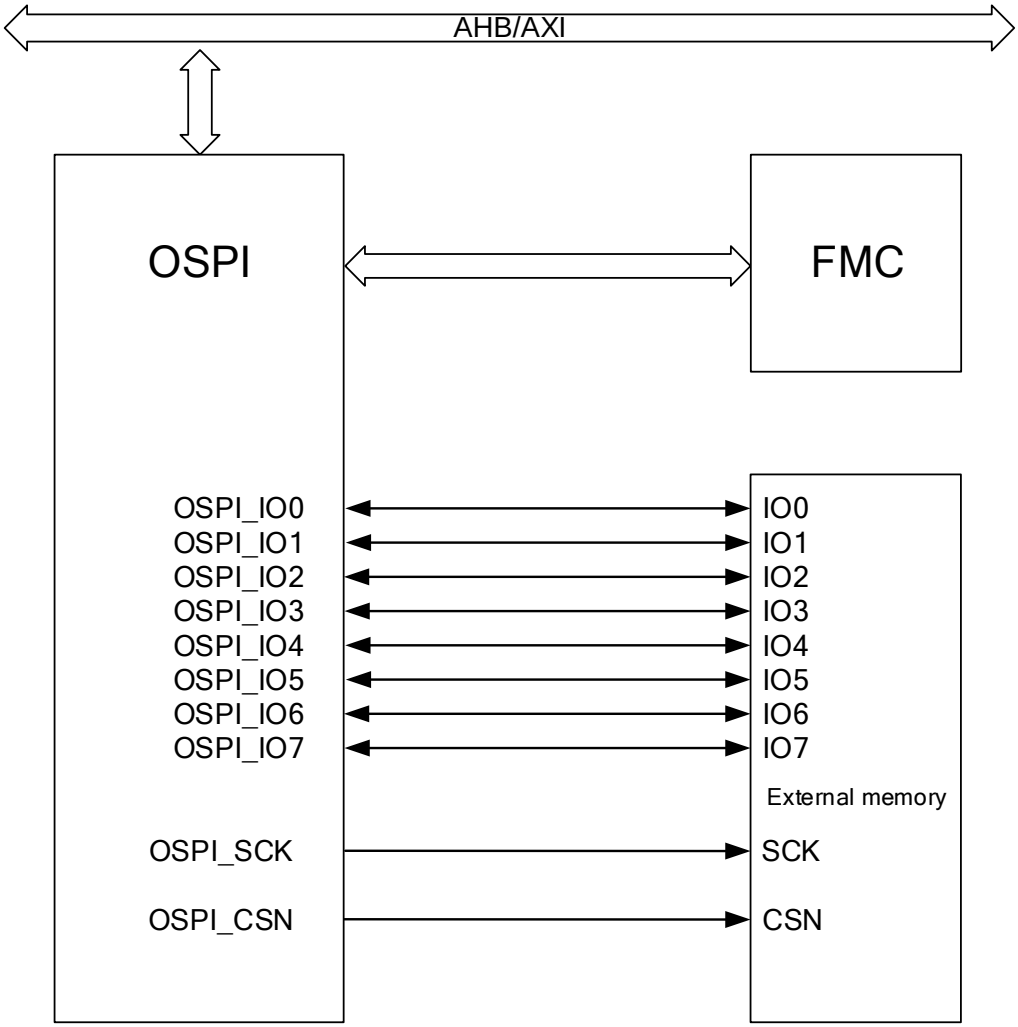

Figure 29-2 OSPI quad communication mode block diagram

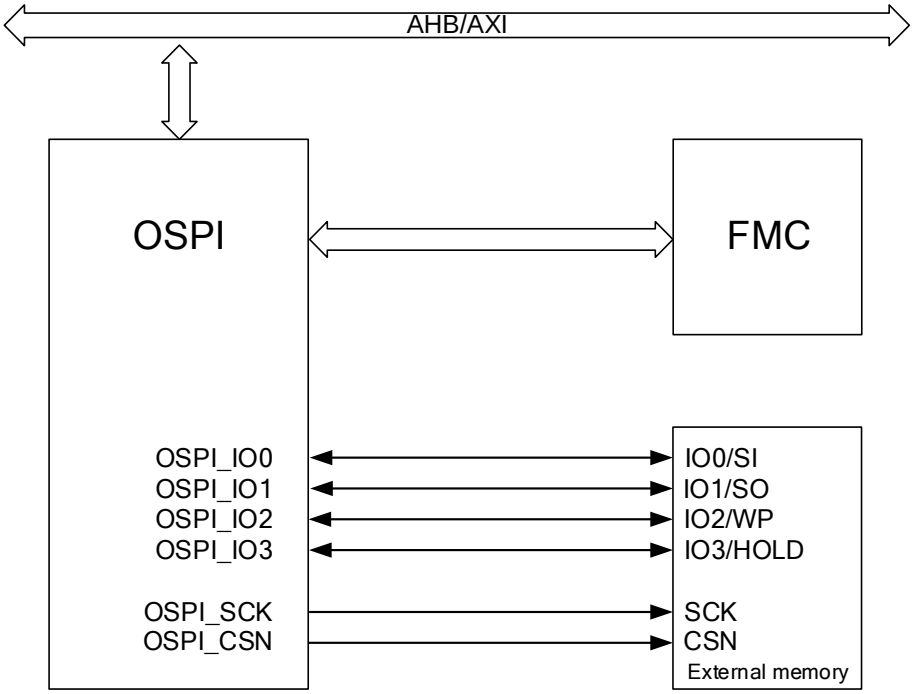

29.3.2. OSPI regular command format

In regular command, there are totally 5 phases which can be included or not: instruction, address, alternate-bytes, dummy and data. Any of these phases can be omitted or not, but at least one of the instructions phase, address phase, alternate byte phase and data phase must be present, this must be guaranteed by software, hardware is not designed to provide any protection methods. In addition, the most-signification-bit always occupies the highest IO line number.

Figure 29-3 OSPI command format in octal mode

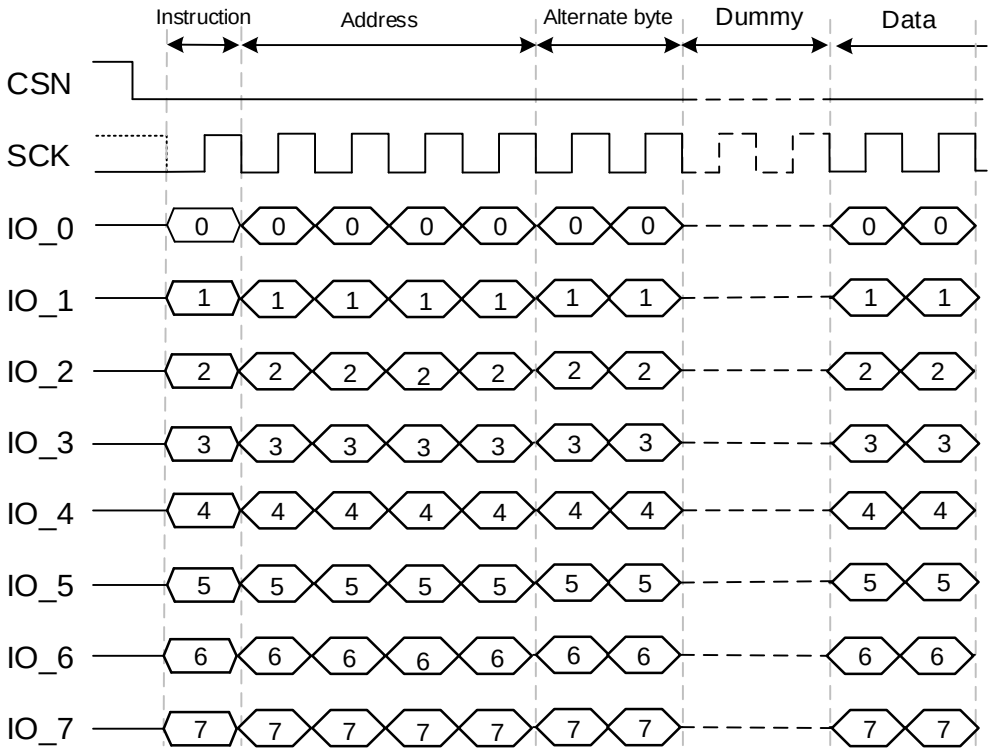

Figure 29-4 OSPI command format in quad mode

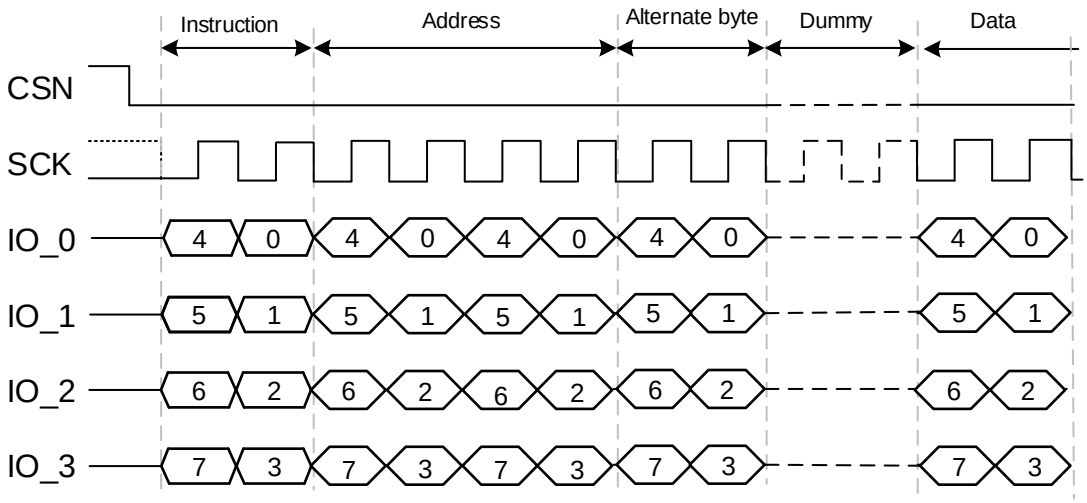

Instruction phase

In instruction phase, configure the command size to be sent in the INSSZ[1:0] bit field of the OSPI_TCFG register(8, 16, 24 or 32 bits), configure the instructions to be sent to the external memory in the OSPI_INS register. The IMOD field of the OSPI_TCFG register defines the instruction phase mode (no instruction, 1-line, 2-lines, 4-lines or 8-lines).

When FMOD[1:0] bit field of the OSPI_CTL register is 0b11, the OSPI works in memory-mapped mode. In memory-mapped mode, define the write operation instruction in the

OSPI_WINS register, configure the format of the instruction in the OSPI_WTCFG register (size and mode). Configure the read operation instruction and the format of the instruction in the OSPI_INS register and OSPI_TCFG register.

Address phase

In address phase, configure the address size to be sent in the ADDRSZ[1:0] bit field of the OSPI_TCFG register(8, 16, 24 or 32 bits). The ADDRMOD[2:0] field of the OSPI_TCFG register defines the address phase mode (no address, 1-line, 2-lines, 4-lines or 8-lines). Set the ADDRDTR bit of the OSPI_TCFG register to enable the DTR mode, and the address is sent on each edge of the clock. In indirect mode and status polling mode, define the address information to be sent in the OSPI_ADDR register.

In memory-mapped mode, the address to be sent is directly given by AXI (Cotex-M core or DMA). Configure the format of the write operation address in the OSPI_WTCFG register (size, mode and whether to enable DTR). Configure the the format of read operation address in the OSPI_TCFG register.

Alternate-bytes phase

In alternate-bytes phase, configure the alternate bytes size to be sent in ALTESZ[1:0] bit field of the OSPI_TCFG register(8, 16, 24 or 32 bits), configure the alternate bytes to be sent to the external memory in the OSPI_ALTE register. The ALTEMOD[2:0] field of the OSPI_TCFG register defines the alternate-bytes phase mode (no alternate-bytes, 1-line, 2-lines, 4-lines or 8-lines). Set the ALTEDTR bit of the OSPI_TCFG register to enable the DTR mode, and the alternate bytes is sent on each edge of the clock.

In memory-mapped mode, define the write operation alternate bytes in the OSPI_WALTE register, configure the format of the alternate bytes in the OSPI_WTCFG register (size, mode and whether to enable DTR). Configure the read operation alternate bytes and the format of the alternate bytes in the OSPI_ALTE register and OSPI_TCFG register.

Dummy phase

In dummy pahse, 0-31 cycles, as specified by DUMYC[4:0] bit field in OSPI_TIMCFG register, are given without any data being transferred for external memory, in order to wait flash prepare data.

In memory-mapped mode, specify write operation dummy cycles in DUMYC[4:0] bit field of the OSPI_WTIMCFG register, and specify read operation dummy cycles in DUMYC[4:0] bit field of the OSPI_TIMCFG register.

Note:

At least 1 dummy cycle when OSPI is working in 2-lines, 4-lines or 8-lines mode to receive data from external memory.

Data phase

In data phase, any number of bytes can be transferred between the external memory and the OSPI interface. The DATAMOD[2:0] bit field of the OSPI_TCFG register defines the mode of the data phase(no data, 1-line, 2-lines, 4-lines or 8-lines, of which no data can only be used in indirect write mode). Set the DADTR bit of the OSPI_TCFG register to enable the DTR mode, and the data is sent on each edge of the clock. In indirect mode, the OSPI_DTLEN register defines the number of bytes to be sent or received. In write operation, data to be sent should be written to the OSPI_DATA register, while in read operation, received data is obtained by reading OSPI_DATA register. In status polling mode, OSPI_DTLEN register defines the number of bytes to be received, and the receive data is obtained from the OSPI_DATA register.

In memory-mapped mode, data to be sent is directly given by AXI (Cotex-M core or DMA). The number of bytes transmitted determines the access operation of the AXI bus, which can be read and written in 8-bit, 16-bit or 32-bit, and correspondingly transfer 1, 2, or 4 bytes. Configure the format of the data in the OSPI_WTCFG register(mode and whether to enable DTR) for sending. Configure the format of the data in the OSPI_TCFG register(mode and whether to enable DTR) for reading.

CSN and SCK behavior

The default value of CSN is high, and it falls before a command begins and rises soon as it finishes. SCK out put signal is a gate signal from internal SCK, where the internal SCK is present all the time.

CSN falls one SCK cycle befor the first valid rising SCK edge, and rises on SCK cycle after the final valid rising SCK edge. Refer to ***Figure 29-5 CSN and SCK behavior***.

Figure 29-5 CSN and SCK behavior

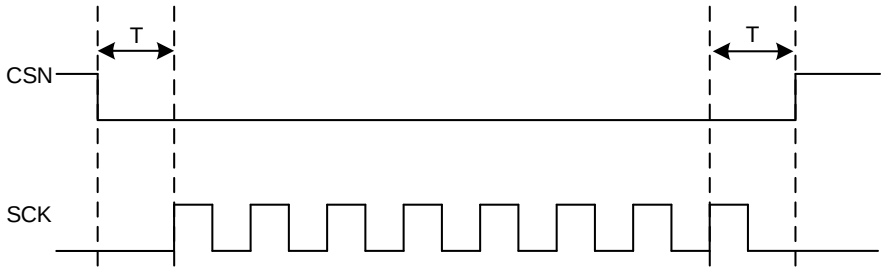

29.4. Operating modes

29.4.1. Indirect mode

In indirect write mode, data to be transmitted are written in OSPI_DATA register. While in indirect read mode, data to be received are read from OSPI_DATA register.

OSPI_DTLEN register defines the number of byte to be transferred. If DTLEN = 0xFFFF FFFF, the number of data is considered undefined, the transmission continues until the memory size boundary is reach as sepcifiled by MESZ[4:0]. If both DTLEN = 0xFFFF FFFF and MESZ[4:0] = 0x1F, then the transmission continues indefinitely until the OSPI is disabled.

Transfer complete flag TC is set when the number of byte programed in DTLEN is reached, in case of undefined transfer length, TC is set when the transmit/received byte number equals to external memory size. An interrupt is generated if TCIE and TC are both set, and it is cleared by setting TCC to 1.

Trigger a command sequence in regular command mode

The command sequence starts immediately after the last information is provided by software according to communication requirement. After the command starts, the BUSY bit is set to 1.

When neither address nor data are required, the sequence start immediately after OSPI_INS has be accessed.

When address is required and no data is required, the sequence starts after OSPI_ADDR has been accessed.

When both address and data are required in indirect write mode, the command sequence starts after OSPI_DATA has been accessed.

FIFO and flag control

A FIFO with a size of 8-bit by 32 is implemented to transfer data. In indirect write mode, 32-bit write access add 4-bytes to FIFO, 16-bit write access add 2-bytes to FIFO, and 8-bit add 1-byte.

FIFO threshold is defined by FTL, in indirect read mode, when the amount of bytes in the FIFO is equal or above the defined threshold, FIFO threshold flag FT is set. FT is also set after data phase is complete if FIFO is not empty. In indirect write mode, when the amount of the empty bytes in the FIFO is above the threshold, FT is set.

An interrupt is generated if both FTIE and FT is set. If DMA is enabled, a DMA request is generated by FT, until this flag is cleared.

In indirect read mode, when the FIFO becomes full, the OSPI temporarily stop SCK clock to avoid overrun. The reading sequence is not resumed until more than 4 byte are available in FIFO.

29.4.2. Status polling mode

In status polling mode, the OSPI periodically starts a read command with up-to 4-bytes data. If the data length defined in the OSPI_DTLEN register is greater than 4, ignore the extra length and only read 4 bytes. The received data can be bit-wise masked and compared with a defined data content, if a match happens, then an interrupt is generated when SMIE is set.

Status polling access starts the same as indirect read sequence. BUSY stays high even between periodic intervals.

Polling match mode SPMOD controls the comparison match mode, if SPMOD = 0, the AND mode is selected. In this mode, status match flag SM is set only when there is a match on all the unmasked bits. While if SPMOD = 1, the OR mode is selected. In this mode, SM is set if there is a match on any of the unmasked bit.

If status-polling-mode-stop SPS is set, status polling sequence stop when a match is detected, and the BUSY flag is cleared at the end of data phase.

In status polling mode, FIFO is bypassed, the read status bytes are stored in OSPI_DATA register, and the stored status bytes are not affected by the MASK control field. OSPI_DATA contents is renewed at the beginning of data phase.

FT is set at the end of data phase, where the external flash memory status bytes are considered read, and it is cleared when OSPI_DATA register is read.

In status polling mode, the external memory must be configured in fixed latency mode.

29.4.3. Memory map mode

In memory-mapped mode, the external flash memory is considered as internal memory, no more than 256MB can be address even if the external memory is larger. The Memory map mode also don't allow an an address outside what defined by MESZ[4:0] but still within 256MB range.

If any of above condition happens, AXI will generate an error .The effect of the error depends on the AXI master. If the master is CPU, a hartfault is generate, if it is DMA, transfer error is generated, and the corresponding DMA channel is disabled.

In this mode, byte, half-word, and word single or burst access are supported.

Execute in place (XIP) is also supported, where OSPI continue to load bytes to the address after completing the most recent access. If the subsequent access is indeed made at a continuous address, the access with be completed faster since the value is already prefetched. Otherwise, the read sequence is restarted, polling CSN low before the read sequence starts.

After the FIFO is empty, the OSPI enters hold state, in which no SCK is sent, CSN is maintained low during this period. At the beginning of a transfer, BUSY goes high before CSN falls.

29.5. OSPI configuration

29.5.1. OSPI system configuration

The details of the OSPI system configuration as follows:

1. Configure the functional mode of OSPI with FMOD[1:0] bit field.

2. If OSPI is in status polling mode, then need to configure the SPMOD and SPS bits to select the polling matching mode and the stop mode of the automatic polling mode.
3. Configure the threshold of FIFO with FTL[4:0] bit field.
4. If need to use DMA, set the DMAEN bit to 1. Must be disable DMA during OSPI configuration, otherwise unexpected requests may be generated.
5. If need to use interrupt, the respective interrupr enable bie can be set.

29.5.2. OSPI device configuration

Configure parameters of OSPI and external device by OSPI_DCFG0 and OSPI_DCFG1 register, the details as follows:

1. Configure the external flash memory type by set the value of DTYSEL[2:0] bit field.
2. Configure the size of external flash memory by set the value of MESZ[4:0][4:0].
3. Configure chip-select minimum high time by set the value of CSHC[5:0].
4. Configure prescaler by set the value of PSC[7:0].

29.5.3. OSPI regular commamd configuration

Indirection mode

The details of the OSPI system configuration as follows:

1. Configuration the data length by set OSPI_DTLEN register.
2. Configuration the frame timing by set OSPI_TIMCFG register.
3. Configuration the frame format by set OSPI_TCFG register.
4. Specify the instruction to be sent to the external flash memory by set OSPI_INS register.
5. Specify the alternate bytes to be sent to the external flash memory immediately after the address is sent by set OSPI_ALTE register.
6. Specify the address to be sent to the external flash memory by set OSPI_ADDR register.
7. Read/write the data through OSPI_DATA register.

Status polling mode

When OSPI is in status polling mode, the details as follows:

1. Specify to mask the received status byte by setting OSPI_STATMK register.
2. Specify the value to be compared with the OSPI_STATMK register by setting OSPI_STATMATCH.
3. Specify the number of clock cycles between read operations by setting OSPI_INTERVAL register.
4. Configure the data length by setting OSPI_DTLEN register.
5. Configure the frame timing by setting OSPI_TIMCFG register.
6. Configure the frame format by setting OSPI_TCFG register.
7. Specify the instruction to be sent to the external flash memory by set OSPI_INS register.
8. Specify the alternate bytes to be sent to the external flash memory immediately after the

address is sent by setting OSPI_ALTE register.

9. Specify the address to be sent to the external flash memory by set OSPI_ADDR register.

Memory map mode

In memory map mode, external flash memory is accessed as internal memory. In this mode, the configuration of OSPI needs to be completed before accessing the memory for the first time. The specific configuration is as follows:

1. Configure the read operation frame timing by setting OSPI_TIMCFG register.
2. Configure the read frame format by setting OSPI_TCFG register.
3. Specify the instruction to be sent to the external flash memory by set OSPI_INS register.
4. Specify the alternate bytes to be sent to the external flash memory immediately after the address is sent by setting OSPI_ALTE register.
5. Configure the write operation frame timing by setting OSPI_WTIMCFG register.
6. Configure the write frame format by setting OSPI_WTCFG register.
7. Specify the instruction to be sent to the external flash memory by set OSPI_WINS register.
8. Specify the alternate bytes to be sent to the external flash memory immediately after the address is sent by setting OSPI_WALTE register.

29.6. Data sampling shift

The OSPI samples data 1/2 of a clock after the data is driven by the external memory after reset. The data samples can be shifted 1/2 clock cycle by configuring the SSAMPLE bit in OSPI_TIMCFG register. Software must clear the SSAMPLE bit when DADTR is set.

29.7. Busy

BUSY bit is set once the OSPI start to operate the external flash memory.

In indirect mode, BUSY is reset if the command phase is end and the FIFO is empty. In status polling mode, only when a match occurs, the BUSY bit will be reset.

29.8. Error management

An error can be generated in the following case.

In indirect or status polling, TERR is generated immediately when a wrong address has been programed in ADDR register according to MESZ[4:0].

In indirect mode, if the address (ADDR) plus data length (DTLEN) is greater than external memory size, TERR will be set once the OSPI is triggered.

In memory mapped mode, when an out of range access is done by AXI master will generate

an AXI error.

29.9. OSPI interrupt

Table 29-2 OSPI interrupt requests

Flag	Description	Clear method	Interrupt enable bit
FT	FIFO threshold	By hardware	FTIE
TC	Transfer complete	Set TCC bit in OSPI_STATC register	TCIE
TERR	Transfer error	Set TERRC bit in OSPI_STATC register	TERRIE
SM	Status match	Set SMC bit in OSPI_STATC register	SMIE

29.10. Register definition

OSPI0 base address: 0x5200 5000

OSPI1 base address: 0x5200 A000

29.10.1. Control register (OSPI_CTL)

Address offset: 0x00

Reset value: 0x0000 0000

This register can be accessed by word(32-bit)

This register cannot be modified when the BUSY bit is 1.

31	30	29	28	27	26	25	24	23	22	21	20	19	18	17	16
Reserved		FMOD[1:0]		Reserved				SPMOD	SPS	Reserved		SMIE	FTIE	TCIE	TERRIE
		rw						rw	rw			rw	rw	rw	rw

15	14	13	12	11	10	9	8	7	6	5	4	3	2	1	0
Reserved			FTL[4:0]					Reserved					DMAEN	Reserved	OSPIEN
					rw								rw		rw

Bits	Fields	Descriptions
31:30	Reserved	Must be kept at reset value.
29:28	FMOD[1:0]	Functional mode 00: Indirect write mode 01: Indirect read mode 10: Status polling mode 11: Memory mapped mode If DMAEN = 1, then the DMA controller for the corresponding channel must be disabled before changing the FMOD value
27:24	Reserved	Must be kept at reset value.
23	SPMOD	Status polling match mode 0: AND match mode. SM is set if all the unmasked bits received from the flash memory match the corresponding bits in the match register. 1: OR match mode. SM is set if any one of the unmasked bits received from the flash memory matches its corresponding bit in the match register.
22	SPS	Status polling mode stop This bit determines if status polling is stopped after a match. 0: Reserved. 1: Status polling mode stops as soon as there is a match.
21:20	Reserved	Must be kept at reset value.
19	SMIE	Status match interrupt enable

		0: Disable status match interrupt. 1: Enable status match interrupt.
18	FTIE	FIFO threshold interrupt enable 0: Disable FIFO threshold interrupt. 1: Enable FIFO threshold interrupt.
17	TCIE	Transfer complete interrupt enable 0: Disabe transfer complete interrupt. 1: Enabe transfer complete interrupt.
16	TERRIE	Transfer error interrupt enable 0: Disable transfer error interrupt. 1: Enable transfer error interrupt.
15:13	Reserved	Must be kept at reset value.
12:8	FTL[4:0]	FIFO threshold level This bit are useful in indirect mode, the threshold number of bytes in the FIFO that will cause the FIFO threshold flag to be set. In indirect write mode (FMOD = 00): 0: FT is set if there are 1 or more free bytes available to be written to the FIFO. 1: FT is set if there are 2 or more free bytes available to be written to the FIFO. ... 31: FT is set if there are 32 free bytes available to be written to the FIFO. In indirect read mode (FMOD = 01)： 0: FT is set if there are 1 or more free bytes available to be read from the FIFO. 1: FT is set if there are 2 or more free bytes available to be read from the FIFO. ... 31: FT is set if there are 32 free bytes available to be read from the FIFO. If DMAEN = 1, then the DMA controller for the corresponding channel must be disabled before changing the FTL value.
7:3	Reserved	Must be kept at reset value.
2	DMAEN	DMA enable In indirect mode, DMA can be used to transfer data through OSPI_DATA register. DMA transfers are initiated when FT is set. 0: DMA disabled. 1: DMA enabled.
1	Reserved	Must be kept at reset value.
0	OSPIEN	Enable OSPI 0: Disable OSPI. 1: Enable OSPI.

29.10.2. Device configuration register 0 (OSPI_DCFG0)

Address offset: 0x08

Reset value: 0x0000 0000

This register can be accessed by word(32-bit).

This register cannot be modified when the BUSY bit is 1.

31	30	29	28	27	26	25	24	23	22	21	20	19	18	17	16
Reserved					DTYSEL[2:0]			Reserved			MESZ[4:0]				
						rw							rw		

15	14	13	12	11	10	9	8	7	6	5	4	3	2	1	0
Reserved		CSHC[5:0]						Reserved							
					rw										

Bits	Fields	Descriptions
31:27	Reserved	Must be kept at reset value.
26:24	DTYSEL[2:0]	Select device type 000: Micron mode, D0/D1 ordering in DTR 8 bit data mode. Regular SPI protocol in single/dual/quad/octal line mode. 001: Macronix mode, D1/D0 ordering in DTR 8 bit data mode. Regular SPI protocol in single/dual/quad/octal line mode. 010: Standard mode. 011: Macronix RAM mode, D1/D0 ordering in DTR 8 bit data mode. Regular SPI protocol in single/dual/quad/octal line mode with dedicated address mapping. Others: Reserved.
23:21	Reserved	Must be kept at reset value.
20:16	MESZ[4:0]	Memory size This field defines the size of external memory using the following formula: Number of bytes in memory = $2^{[MESZ[4:0]+1]}$ MESZ[4:0]+1 is effectively the number of address bits in the memory. The memory capacity can be up to 4GB in indirect mode, while it is limited to 256MB in memory mapped mode.
15:14	Reserved	Must be kept at reset value.
13:8	CSHC[5:0]	Chip select high cycle CSHC+1 dedines the minimum number of CLK cycle which the CSN must stay high between two command sequences. 0: CSN stays high for at least 1 cycle between memory commands. 1: CSN stays high for at least 2 cycles between memory commands. ... 63: CSN stays high for at least 64 cycles between memory commands.

7:0	Reserved	Must be kept at reset value.

29.10.3. Device configuration register 1 (OSPI_DFCG1)

Address offset: 0x0C

Reset value: 0x0000 0000

This register can be accessed by word(32-bit)

This register cannot be modified when the BUSY bit is 1.

31	30	29	28	27	26	25	24	23	22	21	20	19	18	17	16
Reserved													WPSZ[2:0]		
														rw	

15	14	13	12	11	10	9	8	7	6	5	4	3	2	1	0
Reserved								PSC[7:0]							
											rw				

Bits	Fields	Descriptions
31:19	Reserved	Must be kept at reset value.
18:16	WPSZ[2:0]	Wrap size 000: The external memory does not support wrap read. 001: Reserved. 010: External memory device supports wrap size of 16 bytes. 011: External memory device supports wrap size of 32 bytes. 100: External memory device supports wrap size of 64 bytes. 101: External memory device supports wrap size of 128 bytes. 110: Reserved 111: Reserved
15:8	Reserved	Must be kept at reset value.
7:0	PSC[7:0]	This field defines the scaler factor for generating SCK based on the kernel clock (value+1) 0：$F_{CLK} = F_{KERNEL}$ 1：$F_{CLK} = F_{KERNEL} / 2$ 2：$F_{CLK} = F_{KERNEL} / 3$ … 255：$F_{CLK} = F_{KERNEL} / 256$ For odd clock division factors, CLK's duty cycle is not 50%. The clock signal remains low one cycle longer than it stays high.

29.10.4. Status register (OSPI_STAT)

Address offset: 0x20

Reset value: 0x0000 0004

This register can be accessed by word(32-bit).

31	30	29	28	27	26	25	24	23	22	21	20	19	18	17	16
Reserved															

15	14	13	12	11	10	9	8	7	6	5	4	3	2	1	0
Reserved		FL[5:0]						Reserved		BUSY	Reserved	SM	FT	TC	TERR
		r								r		r	r	r	r

Bits	Fields	Descriptions
31:14	Reserved	Must be kept at reset value.
13:8	FL[5:0]	FIFO level This field gives the number of valid bytes which are being held in the FIFO. In status polling mode, FL is zero.
7:6	Reserved	Must be kept at reset value.
5	BUSY	Busy This bit is set when a command is transferring. This bit is cleared once the operation with the flash memory is finished and the FIFO is empty.
4	Reserved	Must be kept at reset value.
3	SM	Status match flag This bit is set in status polling mode when the unmasked received data matches the expected value. It is cleared by writing 1 to SMC.
2	FT	FIFO threshold flag In indirect mode, this bit is set when the FIFO threshold has been reached, or if the FIFO is not empty after the last read operation from the flash memory. In status polling mode, this bit is set when the status resgister is read from the external flash, and it is cleared when OSPI_DATA is read.
1	TC	Transfer complete flag This bit is set in indirect mode when the programmed number of data has been transmitted. It is cleared by writing 1 TCC.
0	TERR	This bit is set when an invalid address is being accessed in indirect mode. It is cleared by writing 1 to TERRC.

29.10.5. Status clear register (OSPI_STATC)

Address offset: 0x24

Reset value: 0x0000 0000

This register can be accessed by word(32-bit).

31	30	29	28	27	26	25	24	23	22	21	20	19	18	17	16
Reserved															

15	14	13	12	11	10	9	8	7	6	5	4	3	2	1	0
Reserved												SMC	Reserved	TCC	TERRC
												w		w	w

Bits	Fields	Descriptions
31:4	Reserved	Must be kept at reset value.
3	SMC	Clear status match flag Writing 1 clears the SM flag in the OSPI_STAT register.
2	Reserved	Must be kept at reset value.
1	TCC	Clear transfer complete flag Writing 1 clears the TC flag in the OSPI_STAT register.
0	TERRC	Clear transfer error flag Writing 1 clears the TERR flag in the OSPI_STAT register.

29.10.6. Data length register (OSPI_DTLEN)

Address offset: 0x40

Reset value: 0x0000 0000

This register can be accessed by word(32-bit).

This register cannot be modified when the BUSY bit is 1.

31	30	29	28	27	26	25	24	23	22	21	20	19	18	17	16
DTLEN[31:16]															
rw															

15	14	13	12	11	10	9	8	7	6	5	4	3	2	1	0
DTLEN[15:0]															
rw															

Bits	Fields	Descriptions
31:0	DTLEN[31:0]	Data length The data length is DTLEN+1 in indirect and status poling mode. The value of DTLEN no greater than 3 should be used for status polling mode. All 1's in indirect mode means undefined length, where OSPI will continue until the end of memory, ad defined by MESZ[4:0]. 0x0000 0000: 1 byte will be transferred 0x0000 0001: 2 bytes will be transferred 0x0000 0002: 3 bytes will be transferred 0x0000 0003: 4 bytes will be transferred ... 0xFFFF FFFD: 4,294,967,294 (4G-2) bytes will be transferred 0xFFFF FFFE: 4,294,967,295 (4G-1) bytes will be transferred

0xFFFF_FFFF: undefined length – all bytes until the end of flash memory (as defined by MESZ[4:0]) are to be transferred. Continue reading indefinitely if MESZ[4:0] = 0x1F.

This field has no effect when in memory-mapped mode.

29.10.7. Address register(OSPI_ADDR)

Address offset: 0x48

Reset value: 0x0000 0000

This register can be accessed by word(32-bit).

31	30	29	28	27	26	25	24	23	22	21	20	19	18	17	16
ADDR[31:16]															
rw															

15	14	13	12	11	10	9	8	7	6	5	4	3	2	1	0
ADDR[15:0]															
rw															

Bits	Fields	Descriptions
31:0	ADDR[31:0]	Address Address to be send to the external flash memory. This bit field can only be written when the BUSY bit is 0 and the memory mapping mode is not configured.

29.10.8. Data register (OSPI_DATA)

Address offset: 0x50

Reset value: 0x0000 0000

This register can be accessed by word/half word/byte(32-bit/16-bit/8-bit).

31	30	29	28	27	26	25	24	23	22	21	20	19	18	17	16
DATA[31:16]															
rw															

15	14	13	12	11	10	9	8	7	6	5	4	3	2	1	0
DATA[15:0]															
rw															

Bits	Fields	Descriptions
31:0	DATA[31:0]	Data Data to be transferred through the flash memory In indirect write mode, data written to this register is stored on the FIFO before sent to the flash memory. If the FIFO is full, a write operation is stalled until the FIFO has enough space. In indirect read mode, reading this register gives the data received from the flash

memory. If the FIFO does not have as many bytes as requested by the read command and if BUSY=1, the read operation is stalled until enough data is present or until the transfer is complete.

In status polling mode, this register contains the last data read from the flash memory.

29.10.9. Status mask register (OSPI_STATMK)

Address offset: 0x80

Reset value: 0x0000 0000

This register can be accessed by word(32-bit).

This register cannot be modified when the BUSY bit is 1.

31	30	29	28	27	26	25	24	23	22	21	20	19	18	17	16
MASK[31:16]															
rw															

15	14	13	12	11	10	9	8	7	6	5	4	3	2	1	0
MASK [15:0]															
rw															

Bits	Fields	Descriptions
31:0	MASK[31:0]	Status mask Mask to be applied to the status bytes received from the flash memory. For bit n: 0: Bit n of the data received is masked and its value is not considered in the matching logic. 1: Bit n of the data received is unmasked and its considered in the matching logic.

29.10.10. Status match register(OSPI_STATMATCH)

Address offset: 0x88

Reset value: 0x0000 0000

This register can be accessed by word(32-bit).

This register cannot be modified when the BUSY bit is 1.

31	30	29	28	27	26	25	24	23	22	21	20	19	18	17	16
MATCH[31:16]															
rw															

15	14	13	12	11	10	9	8	7	6	5	4	3	2	1	0
MATCH[15:0]															

Bits	Fields	Descriptions

31:0	MATCH[31:0]	Status match Expected value to be compared with the masked status register to get a match.

29.10.11. Interval register (OSPI_INTERVAL)

Address offset: 0x90

Reset value: 0x0000 0000

This register can be accessed by word(32-bit).

This register cannot be modified when the BUSY bit is 1.

31	30	29	28	27	26	25	24	23	22	21	20	19	18	17	16
Reserved															

15	14	13	12	11	10	9	8	7	6	5	4	3	2	1	0
INTERVAL[15:0]															
rw															

Bits	Fields	Descriptions
31:16	Reserved	Must be kept at reset value.
15:0	INTERVAL[15:0]	Interval cycle Number of SCK cycles between two read commands in status polling mode.

29.10.12. Transfer configuration register (OSPI_TCFG)

Address offset: 0x100

Reset value: 0x0000 0000

This register can be accessed by word(32-bit).

This register cannot be modified when the BUSY bit is 1.

31	30	29	28	27	26	25	24	23	22	21	20	19	18	17	16
Reserved				DADTR	DATAMOD[2:0]			Reserved		ALTESZ[1:0]		ABDTR	ALTEMOD[2:0]		
				rw	rw					rw		rw	rw		

15	14	13	12	11	10	9	8	7	6	5	4	3	2	1	0
Reserved		ADDRSZ[1:0]		ADDRDTR	ADDRMOD[2:0]			Reserved		INSSZ[1:0]		Reserved	IMOD[2:0]		
		rw		rw	rw					rw			rw		

Bits	Fields	Descriptions
31:28	Reserved	Must be kept at reset value.
27	DADTR	Data double transfer rate 0: Disable DTR mode in data phase 1: Enable DTR mode in data phase **Note:** only for GD25LX512ME.

26:24	DATAMOD[2:0]	Data mode This bit defines the operation mode of the data phase. 000: No data. 001: Data on a single line. 010: Data on two lines. 011: Data on four lines. 100: Data on eight lines. 101: Reserved. 110: Reserved. 111: Reserved.
23:22	Reserved	Must be kept at reset value.
21:20	ALTESZ[1:0]	Alternate bytes size This bit defines alternate bytes size. 00: 8-bit alternate byte 01: 16-bit alternate bytes 10: 24-bit alternate bytes 11: 32-bit alternate bytes
19	ABDTR	Alternate bytes double transfer rate 0: Disable DTR mode in alternate bytes phase 1: Enable DTR mode in alternate bytes phase **Note:** only for GD25LX512ME.
18:16	ALTEMOD[2:0]	Alternate bytes mode This field defines the alternate bytes phase mode of operation. 000: No alternate bytes. 001: Alternate bytes on a single line. 010: Alternate bytes on two lines. 011: Alternate bytes on four lines. 100: Alternate bytes on eight lines. 101: Reserved. 110: Reserved. 111: Reserved.
15:14	Reserved	Must be kept at reset value.
13:12	ADDRSZ[1:0]	Address size This bit defines address size. 00: 8-bit address. 01: 16-bit address. 10: 24-bit address. 11: 32-bit address.
11	ADDRDTR	Address double transfer rate 0: Disable DTR mode in address phase

		1: Enable DTR mode in address phase **Note:** only for GD25LX512ME.
10:8	ADDRMOD[2:0]	Address mode This field defines the address phase mode of operation. 000: No address. 001: Address on a single line. 010: Address on two lines. 011: Address on four lines. 100: Address on eight lines. 101: Reserved. 110: Reserved. 111: Reserved.
7:6	Reserved	Must be kept at reset value.
5:4	INSSZ[1:0]	Instruction size This field defines instruction size. 00: 8-bit instruction. 01: 16-bit instruction. 10: 24-bit instruction. 11: 32-bit instruction.
3	Reserved	Must be kept at reset value.
2:0	IMOD[2:0]	Instruction mode This field defines the instruction phase mode of operation. 000: No instruction. 001: Instruction on a single line. 010: Instruction on two lines. 011: Instruction on four lines. 100: Instruction on eight lines. 101: Reserved. 110: Reserved. 111: Reserved.

29.10.13. Timing configuration register (OSPI_TIMCFG)

Address: 0x108

Reset value: 0x0000 0000

This register can be accessed by word(32-bit).

This register cannot be modified when the BUSY bit is 1.

31	30	29	28	27	26	25	24	23	22	21	20	19	18	17	16
Reserved	SSAMPLE	Reserved		DEHQC	Reserved										
	rw			rw											

15	14	13	12	11	10	9	8	7	6	5	4	3	2	1	0
Reserved											DUMYC[4:0]				
													rw		

Bits	Fields	Descriptions
31	Reserved	Must be kept at reset value.
30	SSAMPLE	Sample shift By default, the OSPI samples data 1/2 of a SCK cycle after the data is driven by the flash memory. This bit allows the data is to be sampled later in order to account for exrernal signal delays. 0: No shift. 1: 1/2 cycle shift. **Note:** the SSAMPLE bit must be set to 1 when communication rate greater than 40M.
29:28	Reserved	Must be kept at reset value.
27	DEHQC	Delay hold 1/4 cycle 0: No delay hold. 1: delay hold 1/4 cycle.
26:5	Reserved	Must be kept at reset value.
4:0	DUMYC[4:0]	Number of dummy cycles This bit field defines the duration of the dummy instruction phase.

29.10.14. Instruction register (OSPI_INS)

Address: 0x110

Reset value: 0x0000 0000

This register can be accessed by word(32-bit).

This register cannot be modified when the BUSY bit is 1.

31	30	29	28	27	26	25	24	23	22	21	20	19	18	17	16
INSTRUCTION[31:16]															
rw															

15	14	13	12	11	10	9	8	7	6	5	4	3	2	1	0
INSTRUCTION[15:0]															
rw															

Bits	Fields	Descriptions
31:0	INSTRUCTION[31:0]	Instruction Instruction to be send to the external flash memory.

29.10.15. Alternate bytes register (OSPI_ALTE)

Address offset: 0x120

Reset value: 0x0000 0000

This register can be accessed by word(32-bit).

This register cannot be modified when the BUSY bit is 1.

31	30	29	28	27	26	25	24	23	22	21	20	19	18	17	16
ALTE[31:16]															
rw															

15	14	13	12	11	10	9	8	7	6	5	4	3	2	1	0
ALTE[15:0]															
rw															

Bits	Fields	Descriptions
31:0	ALTE[31:0]	Alternate bytes Alternate bytes to be send to the external flash memory.

29.10.16. Wrap transfer configuration register (OSPI_WPTCFG)

Address offset: 0x140

Reset value: 0x0000 0000

This register can be accessed by word(32-bit).

This register cannot be modified when the BUSY bit is 1.

31	30	29	28	27	26	25	24	23	22	21	20	19	18	17	16
Reserved				DADTR	DATAMOD[2:0]			Reserved		ALTESZ[1:0]		ABDTR	ALTEMOD[1:0]		
				rw	rw					rw		rw	rw		

15	14	13	12	11	10	9	8	7	6	5	4	3	2	1	0
Reserved		ADDRSZ[1:0]		ADDRDTR	ADDRMOD[2:0]			Reserved		INSSZ[1:0]		Reserved	IMOD[2:0]		
		rw		rw	rw					rw			rw		

Bits	Fields	Descriptions
31:28	Reserved	Must be kept at reset value.
27	DADTR	Data double transfer rate 0: Disable DTR mode in data phase. 1: Enable DTR mode in data phase. **Note:** only for GD25LX512ME.
26:24	DATAMOD[2:0]	Data mode This bit defines the operation mode of the data phase. 000: No data. 001: Data on a single line. 010: Data on two lines.

		011: Data on four lines. 100: Data on eight lines. 101: Reserved. 110: Reserved. 111: Reserved.
23:22	Reserved	Must be kept at reset value.
21:20	ALTESZ[1:0]	Alternate bytes size This bit defines alternate bytes size. 00: 8-bit alternate byte 01: 16-bit alternate bytes 10: 24-bit alternate bytes 11: 32-bit alternate bytes
19	ABDTR	Alternate bytes double transfer rate 0: Disable DTR mode in alternate bytes phase 1: Enable DTR mode in alternate bytes phase **Note:** only for GD25LX512ME.
18:16	ALTEMOD[2:0]	Alternate bytes mode This field defines the alternate bytes phase mode of operation. 000: No alternate bytes. 001: Alternate bytes on a single line. 010: Alternate bytes on two lines. 011: Alternate bytes on four lines. 100: Alternate bytes on eight lines. 101: Reserved. 110: Reserved. 111: Reserved.
15:14	Reserved	Must be kept at reset value.
13:12	ADDRSZ[1:0]	Address size This bit defines address size. 00: 8-bit address. 01: 16-bit address. 10: 24-bit address. 11: 32-bit address.
11	ADDRDTR	Address double transfer rate 0: Disable DTR mode in address phase 1: Enable DTR mode in address phase **Note:** only for GD25LX512ME.
10:8	ADDRMOD[2:0]	Address mode This field defines the address phase mode of operation. 000: No address.

		001: Address on a single line. 010: Address on two lines. 011: Address on four lines. 100: Address on eight lines. 101: Reserved. 110: Reserved. 111: Reserved.
7:6	Reserved	Must be kept at reset value.
5:4	INSSZ[1:0]	Instruction size This field defines instruction size. 00: 8-bit instruction. 01: 16-bit instruction. 10: 24-bit instruction. 11: 32-bit instruction.
3	Reserved	Must be kept at reset value.
2:0	IMOD[2:0]	Instruction mode This field defines the instruction phase mode of operation. 000: No instruction. 001: Instruction on a single line. 010: Instruction on two lines. 011: Instruction on four lines. 100: Instruction on eight lines. 101: Reserved. 110: Reserved. 111: Reserved.

29.10.17. Wrap timing configuration register (OSPI_WPTIMCFG)

Address offset: 0x148

Reset value: 0x0000 0000

This register can be accessed by word(32-bit).

This register cannot be modified when the BUSY bit is 1.

31	30	29	28	27	26	25	24	23	22	21	20	19	18	17	16
Reserved	SSAMPLE	Reserved	DEHQC	Reserved											
	rw		rw												

15	14	13	12	11	10	9	8	7	6	5	4	3	2	1	0
Reserved											DUMYC[4:0]				
													rw		

Bits	Fields	Descriptions

31	Reserved	Must be kept at reset value.
30	SSAMPLE	Sample shift By default, the OSPI samples data 1/2 of a SCK cycle after the data is driven by the flash memory. This bit allows the data is to be sampled later in order to account for exrernal signal delays. 0: No shift. 1: 1/2 cycle shift.
29	Reserved	Must be kept at reset value.
28	DEHQC	Delay hold 1/4 cycle 0: No delay hold. 1: delay hold 1/4 cycle.
27:5	Reserved	Must be kept at reset value.
4:0	DUMYC[4:0]	Number of dummy cycles This bit field defines the duration of the dummy instruction phase.

29.10.18. Wrap instruction register (OSPI_WPINS)

Address offset: 0x150

Reset value: 0x0000 0000

This register can be accessed by word(32-bit).

This register cannot be modified when the BUSY bit is 1.

31	30	29	28	27	26	25	24	23	22	21	20	19	18	17	16
INSTRUCTION[31:16]															
rw															

15	14	13	12	11	10	9	8	7	6	5	4	3	2	1	0
INSTRUCTION[15:0]															
rw															

Bits	Fields	Descriptions
31:0	INSTRUCTION[31:0]	Instruction Instruction to be send to the external flash memory.

29.10.19. Wrap alternate byte register (OSPI_WPALTE)

Address offset: 0x160

Reset value: 0x0000 0000

This register can be accessed by word(32-bit).

This register cannot be modified when the BUSY bit is 1.

31	30	29	28	27	26	25	24	23	22	21	20	19	18	17	16

ALTE[31:16]
rw

15	14	13	12	11	10	9	8	7	6	5	4	3	2	1	0
ALTE[15:0]															
rw															

Bits	Fields	Descriptions
31:0	ALTE[31:0]	Alternate bytes Alternate bytes to be send to the external flash memory.

29.10.20. Write transfer configuration register (OSPI_WTCFG)

Address offset: 0x180

Reset value: 0x0000 0000

This register can be accessed by word(32-bit).

This register cannot be modified when the BUSY bit is 1.

31	30	29	28	27	26	25	24	23	22	21	20	19	18	17	16
Reserved				DADTR	DATAMOD[2:0]			Reserved		ALTESZ[1:0]		ABDTR	ALTEMOD[1:0]		
				rw	rw					rw		rw	rw		

15	14	13	12	11	10	9	8	7	6	5	4	3	2	1	0
Reserved		ADDRSZ[1:0]		ADDRDTR	ADDRMOD[2:0]			Reserved		INSSZ[1:0]		Reserved	IMOD[2:0]		
		rw		rw	rw					rw			rw		

Bits	Fields	Descriptions
31:28	Reserved	Must be kept at reset value.
27	DADTR	Data double transfer rate 0: Disable DTR mode in data phase. 1: Enable DTR mode in data phase. **Note:** only for GD25LX512ME.
26:24	DATAMOD[2:0]	Data mode This bit defines the operation mode of the data phase. 000: No data. 001: Data on a single line. 010: Data on two lines. 011: Data on four lines. 100: Data on eight lines. 101: Reserved. 110: Reserved. 111: Reserved.
23:22	Reserved	Must be kept at reset value.
21:20	ALTESZ[1:0]	Alternate bytes size

		This bit defines alternate bytes size. 00: 8-bit alternate byte 01: 16-bit alternate bytes 10: 24-bit alternate bytes 11: 32-bit alternate bytes
19	ABDTR	Alternate bytes double transfer rate 0: Disable DTR mode in alternate bytes phase 1: Enable DTR mode in alternate bytes phase **Note:** only for GD25LX512ME.
18:16	ALTEMOD[2:0]	Alternate bytes mode This field defines the alternate bytes phase mode of operation. 000: No alternate bytes. 001: Alternate bytes on a single line. 010: Alternate bytes on two lines. 011: Alternate bytes on four lines. 100: Alternate bytes on eight lines. 101: Reserved. 110: Reserved. 111: Reserved.
15:14	Reserved	Must be kept at reset value.
13:12	ADDRSZ[1:0]	Address size This bit defines address size. 00: 8-bit address. 01: 16-bit address. 10: 24-bit address. 11: 32-bit address.
11	ADDRDTR	Address double transfer rate 0: Disable DTR mode in address phase. 1: Enable DTR mode in address phase. **Note:** only for GD25LX512ME.
10:8	ADDRMOD[2:0]	Address mode This field defines the address phase mode of operation. 000: No address. 001: Address on a single line. 010: Address on two lines. 011: Address on four lines. 100: Address on eight lines. 101: Reserved. 110: Reserved. 111: Reserved.

7:6	Reserved	Must be kept at reset value.
5:4	INSSZ[1:0]	Instruction size This field defines instruction size. 00: 8-bit instruction. 01: 16-bit instruction. 10: 24-bit instruction. 11: 32-bit instruction.
3	Reserved	Must be kept at reset value.
2:0	IMOD[2:0]	Instruction mode This field defines the instruction phase mode of operation. 000: No instruction. 001: Instruction on a single line. 010: Instruction on two lines. 011: Instruction on four lines. 100: Instruction on eight lines. 101: Reserved. 110: Reserved. 111: Reserved.

29.10.21. Write timing configuration register (OSPI_WTIMCFG)

Address offset: 0x188

Reset value: 0x0000 0000

This register can be accessed by word(32-bit).

This register cannot be modified when the BUSY bit is 1.

31	30	29	28	27	26	25	24	23	22	21	20	19	18	17	16
Reserved															

15	14	13	12	11	10	9	8	7	6	5	4	3	2	1	0
Reserved											DUMYC[4:0]				
													rw		

Bits	Fields	Descriptions
31:5	Reserved	Must be kept at reset value.
4:0	DUMYC[4:0]	Number of dummy cycles This bit field defines the duration of the dummy instruction phase.

29.10.22. Write instruction register (OSPI_WINS)

Address offset: 0x190

Reset value: 0x0000 0000

This register can be accessed by word(32-bit).

This register cannot be modified when the BUSY bit is 1.

31	30	29	28	27	26	25	24	23	22	21	20	19	18	17	16
INSTRUCTION[31:16]															
rw															

15	14	13	12	11	10	9	8	7	6	5	4	3	2	1	0
INSTRUCTION[15:0]															
rw															

Bits	Fields	Descriptions
31:0	INSTRUCTION[31:0]	Instruction Instruction to be send to the external flash memory.

29.10.23. Write alternate byte register (OSPI_WALTE)

Address offset: 0x1A0

Reset value: 0x0000 0000

This register can be accessed by word(32-bit).

This register cannot be modified when the BUSY bit is 1.

31	30	29	28	27	26	25	24	23	22	21	20	19	18	17	16
ALTE[31:16]															
rw															

15	14	13	12	11	10	9	8	7	6	5	4	3	2	1	0
ALTE[15:0]															
rw															

Bits	Fields	Descriptions
31:0	ALTE[31:0]	Alternate bytes Alternate bytes to be send to the external flash memory.

30. Clock phase delay module (CPDM)

30.1. Overview

The Clock Phase Delay Module (CPDM) is used to delay the phase of the input clock and then output the clock. When used, the application needs to first program the phase of the output clock, and then use the output clock in other peripherals to receive data.

Phase delay is related to voltage and temperature and may require reconfiguration of the application and redetermination of the phase relationship between the output clock and the received data as parameters change.

30.2. Characteristics

- Supports the input clock frequency ranges: 25 MHz ~ 208MHz.
- Supports up to 12 output clock phase selections.

30.3. Function overview

The Clock Phase Delay Module (CPDM) consists of register interface module, delay line module, delay line length sampling module and output clock selection multiplexer. The delay line module is used to generate unit delay.

Note:
CPDM is only used in SDIO, please refer to ***Figure 36-6. SDIO block diagram***.

Figure 30-1. Schematic diagram of CPDM

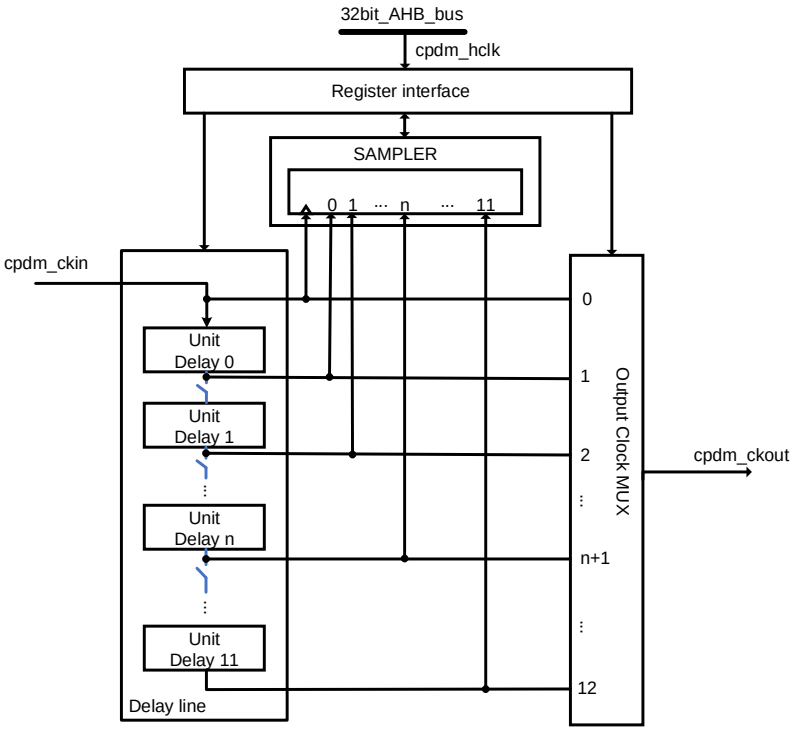

Note:

cpdm_hclk: register interface clock of CPDM.
cpdm_ckin: the input clock of CPDM.
cpdm_ckout: the output clock of CPDM.

30.3.1. Overview

The Clock Phase Delay Module (CPDM) can be enabled by configuring the CPDMEN bit in the CPDM_CTL register. The delay line length sampling module can be enabled by configuring the DLSEN bit in the CPDM_CTL register.

Before shifting the phase of the input clock, the delay line length should be configured as one input clock period. When the CPDM is enabled and the delay line length sampling module is enabled (DLSEN = 1), define the number of delay steps required for a unit delay unit by configuring the DLSTCNT[11:0] bit field in the CPDM_CFG register. When the delay line length sampling module is enabled (DLSEN = 1), the length sampler can access the delay line length (DLLEN) and the length valid flag (DLLENF) in the CPDM_CFG register. Therefore, the delay line length can be configured by enabling the length sampler. When the delay line length sampling module is disabled (DLSEN = 0), the CPSEL bit in the CPDM_CFG register is used to select the output clock phase.

When the delay line length configuration is complete and the delay line length sampling module is disabled (DLSEN = 0), the clock that passes through the phase shift can be finally output through the clock phase selector.

- When CPDMEN = 0 and DLSEN = 0, CPDM output clock is enabled, and the output clock is equal to the input clock.
- When DLSEN = 1, the delay sampling module is enabled, and the CPDM output clock is disabled.
- When CPDMEN = 1 and DLSEN = 0, the CPDM output clock is enabled, and the phase of the output clock is determined by the configuration of CPSEL[3:0] bits in CPDM_CFG.

Note: The unit delay and output clock phase can only be changed when DLSEN is 1.

30.3.2. Operation process

Step one

The delay line length needs to be configured before configuring the output clock phase. The configured delay line length should cover a complete input clock cycle. ***Figure 30-2. CPDM delay line length configuration flowchart*** shows the configuration process.

Figure 30-2. CPDM delay line length configuration flowchart

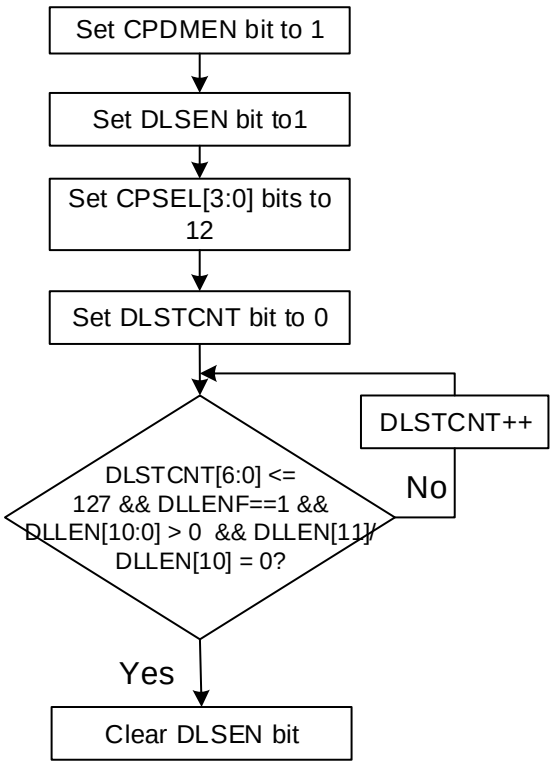

Note:

1. If DLLEN[10:0] > 0 and DLLEN[11] / DLLEN[10] = 0, configure the delay line length to an input clock cycle.
2. For N = 10 to 0, if DLLEN[N] = 1, the number of unit delays covering an input clock cycle is N.

Step two

The user can configure any output clock phase between unit delay N when the delay line length has been configured for one full input clock cycle. The specific method is as follows *Figure 30-3. CPDM output clock phase configuration flowchart* .

Figure 30-3. CPDM output clock phase configuration flowchart

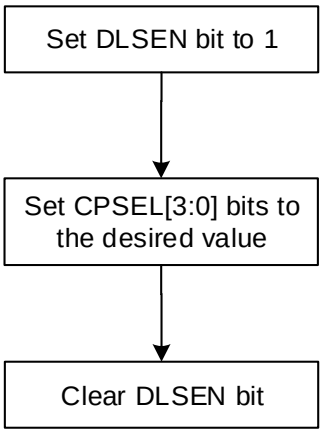

30.4. Register definition

CPDM(SDIO0) base address: 0x5200 8000

CPDM(SDIO1) base address: 0x4802 2800

30.4.1. Control register (CPDM_CTL)

Address offset: 0x00

Reset value: 0x0000 0000

This register has to be accessed by word (32-bit).

31	30	29	28	27	26	25	24	23	22	21	20	19	18	17	16
Reserved															

15	14	13	12	11	10	9	8	7	6	5	4	3	2	1	0
Reserved														DLSEN	CPDMEN
														rw	rw

Bits	Fields	Descriptions
31:2	Reserved	Must be kept at reset value.
1	DLSEN	CPDM delay line sample module enable bit 0: disable CPDM delay line sample module 1: enable CPDM delay line sample module
0	CPDMEN	CPDM enable bit 0: disable CPDM 1: enable CPDM

30.4.2. Configuration register (CPDM_CFG)

Address offset: 0x04

Reset value: 0x0000 0000

This register has to be accessed by word (32-bit).

31	30	29	28	27	26	25	24	23	22	21	20	19	18	17	16
DLLENF	Reserved			DLLEN[11:0]											
r										r					

15	14	13	12	11	10	9	8	7	6	5	4	3	2	1	0
Reserved	DLSTCNT[6:0]							Reserved				CPSEL[3:0]			
				rw										rw	

Bits	Fields	Descriptions
31	DLLENF	Valid mark of delay line length

		0: The length value in DLLEN[11:0] is invalid. 1: The length value in DLLEN[11:0] is valid.
30:28	Reserved	Must be kept at reset value.
27:16	DLLEN[11:0]	Delay line length 12 unit delay values sampled on the rising edge of the input clock Only valid if DLLENF = 1.
15	Reserved	Must be kept at reset value.
14:8	DLSTCNT[6:0]	Defines a delay step count for a unit delay UNIT This bits can be written only when DLSEN = 1. 0000000: UNIT delay = Initial delay 0000001: UNIT delay = Initial delay + 1 * Delay step … 1111111: UNIT delay = Initial delay + 127 * Delay step
7:4	Reserved	Must be kept at reset value.
3:0	CPSEL[3:0]	Output clock phase selection These bits can be written only when DLSEN = 1. 0000: Output clock phase = input clock 0001: Output clock phase = input clock + 1 * UNIT delay .. 1100: Output clock phase = input clock + 12 * UNIT delay 1101 ~ 1111: Reserved

31. Digital camera interface (DCI)

31.1. Overview

DCI is a parallel interface to capture video or picture from a camera. It supports various color space such as YUV/RGB, as well as compression format such as JPEG. Support CCIR656 video decoder formats and perform additional processing of the image.

31.2. Characteristics

- Digital video/picture capture
- 8/10/12/14 data width supported
- High transfer efficiency with DMA interface
- Video/picture crop supported
- Various pixel digital encoding formats supported including YCbCr422/RGB565/YUV420/Bayer
- JPEG compression format supported
- Hard/embedded synchronous signals supported
- Support for CCIR656 video interface as well as traditional sensor interface.

31.3. Block diagram

The DCI contains these modules: Signal Processing, Pixel FIFO, FIFO controller, window timing, embedded sync detection, DMA interface and control register.

Figure 31-1. DCI module block diagram

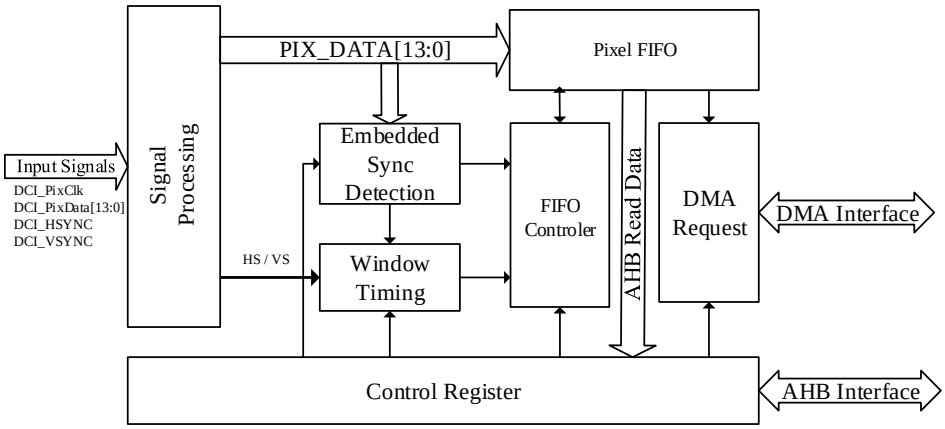

The signal processing module generates useful signals for other internal modules from external input signals. The frequency of HCLK should be 2.5 times higher than DCI_PixClk to ensure the proper operation of signal processing module.

The embedded sync detection module is designed to support embedded synchronization mode. In DCI embedded synchronization mode, video synchronization information is embedded into pixel data and there is no hardware horizontal or vertical synchronization signal (DCI_HSYNC or DCI_VSYNC). DCI uses embedded sync detection module to extract synchronization information from pixel data, and then recover horizontal and vertical synchronization signals.

The window timing module performs image cutting function. This module calculates a pixel's position using synchronization signals either from DCI interface or embedded sync detection module and then decides whether this pixel data needs to be received according to the configuration of DCI_CWSPOS and DCI_CWSZ registers.

DCI uses a 4 word (32-bit) FIFO to buffer the received pixel data. If DMA mode is enabled, the DMA interface asserts a DMA request every time a 32-bit data is received. Control register provides register interface between DCI and software.

31.4. Signal description

Table 31-1. PINs used by DCI

Direction	Name	Width	Description
Input	DCI_PixClk	1	DCI Pixel Clock
Input	DCI_PixData	14	DCI Pixel Data
Input	DCI_HSYNC	1	DCI Horizontal Synchronization
Input	DCI_VSYNC	1	DCI Vertical Synchronization

31.5. Function overview

31.5.1. DCI hardware synchronization mode

In DCI hardware synchronization mode (ESM bit in DCI_CTL register is 0), DCI_HSYNC and DCI_VSYNC signals are used to indicate the start of a line and a frame. DCI captures pixel data from DCI_PixData[13:0] at rising or falling edge of DCI_PixClk (clock polarity is configured by CKS bit in DCI_CTL).

Figure 31-2. Hardware synchronization mode

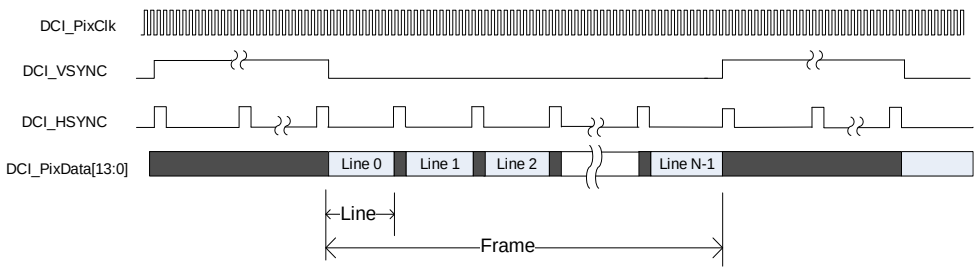

The above figure assumes that the polarities of both DCI_HSYNC and DCI_VSYNC are

high during blanking period, so the data on DCI_PixData lines is only valid when both DCI_HSYNC and DCI_VSYNC are low.

JPEG mode

DCI supports JPEG video/picture compression format in hardware synchronization mode. In JPEG mode (JM bit in DCI_CTL is set), the DCI_VSYNC is used to indicate start of a new frame, and DCI_HSYNC is used as stream data valid signal.

Figure 31-3. Hardware synchronization mode: JPEG format supporting

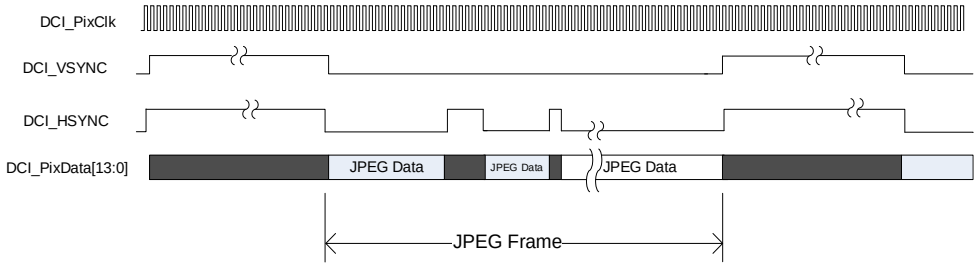

31.5.2. Embedded synchronization mode

DCI supports embedded synchronization mode. In this mode there are only DCI_PixData and DCI_PixClk signals in DCI interface and the synchronization information is embedded in the pixel data. This mode is enabled by setting ESM bit and clearing JM bit in DCI_CTL register.

In embedded synchronization mode, line and frame synchronization information is encoded into sync code and embedded into the pixel data. There are four kinds of sync code: Line Start(LS), Line End(LE), Frame Start(FS) and Frame End(FE). In this mode the data width is forced to 8 and each sync code is composed by 4-byte sequence: FF-00-00-XY and XY is defined in DCI_SC register. In embedded synchronization mode, the 0xFF and 0x00 should not appear in pixel data to avoid mistake.

In embedded synchronization mode, DCI starts to detect the sync codes after enabled and recover line/frame synchronization information. For example, DCI starts to capture a new frame if it detects a Frame End code and then a Frame Start Code.

When detecting sync code, it is possible to make DCI compare only a few bits of XY byte in FF_00_00_XY sequence by configuring sync code unmask register (DCI_SCUMSK). DCI will only compare bits unmasked by DCI_SCUMSK register. For example: LS in DCI_SC register is A5 and LSM in DCI_SCUMSK is F0, then DCI will only compare the higher 4 bits for LS sync code and thus, FF-00-00-A6 sequence will also be detected as a LS code.

31.5.3. CCIR656 mode

Interlace mode

CCIR656 standard use an embedded timing codec to replace the VSYNC and HSYNC signal.

Only the PIXCLK and DCI_PixData[7:0] signals are used in interlace mode. Code (SAV) represents the beginning of each valid row, and code (EAV) is the end of each valid row.Blanking data inserts are inserted between the EAV and SAV code. The DCI decode the embedded timing codec, according to the information of the field, the original YCbCr image is rearranged in the software.

Table 31-2. Typical one-line data composition

EAV Code				Blanking Video				SAV Code				Active Video			
FF	0	0	XY	Cb	Y	Cr	V	FF	0	0	XY	Cb	Y	Cr	Y
4 Bytes				280(268) Bytes				4 Bytes				1440 Bytes			

The 4-byte format of the EAV and SAV is specified as follows (represented in hexadecimal below):FF 00 00 XY

The first three bytes are fixed and must be FF 00 00, while the fourth byte (XY) is determined by the field and the hidden information, and its eight bits are defined as follows: 1 F V H P3 P2 P1 P0.

F: marks the field information, which is 0 when transmitting the even field and 1 when transmitting the odd field.

V: Marks the blanking information, which is 1 when the blanking data is transmitted and 0 when the valid video data is transmitted.

H: Label EAV or SAV, where SAV is 0 and EAV is 1.

P0~P3 is the protection bit, and its value depends on F, H and V, which plays the role of calibration. The calculation method is as follows:

Table 31-3. Coding for SAV and EAV

Bit 7	Bit 6	Bit 5	Bit 4	Bit 3	Bit 2	Bit 1	Bit 0
1	**F**	**V**	**H**	**P3**	**P2**	**P1**	**P0**
1	0	0	0	0	0	0	0
1	0	0	1	1	1	0	1
1	0	1	0	1	0	1	1
1	0	1	1	0	1	1	0
1	1	0	0	0	1	1	1
1	1	0	1	1	0	1	0
1	1	1	0	1	1	0	0
1	1	1	1	0	0	0	1

The DCI decodes and filters out the timing-coding from the data stream, recovering VSYNC and HSYNC signals for internal use, such as statistical block control. Data is forwarded sequentially to the data receiving without reordering, field 1 followed by field 0. The fields must be reordered in software to get back the original image.

The Change of Field interrupt Flag(COFIF) flag bit will be set when an alternation occurs on the spot. CCIR656 standard images are generally in 625/50 PAL or 525/60 NTSC format. The

image is composed of odd and even fields, horizontal and vertical blanking and valid data. A field consists of three parts, top vertical blanking, valid data and bottom vertical blanking.

The following table showss the frame information in PAL/NTSC system.

Table 31-4. A frame image format definition

Lines		Field/VBlk		Line Description
PAL	NTSC	F	V	
22	19	0	1	Field 0 top vertical blanking
288	240	0	0	Field 0 active video
2	3	0	1	Field 0 bottom vertical blanking
23	20	1	1	Field 1 top vertical blanking
288	240	1	0	Field 1 active video
2	3	1	1	Field 1 bottom vertical blanking
625	525			

Progressive Mode

Images are scanned and arranged in a progressive manner.This activity field is considered to be field 1 and the DCI decoding ignores the F bit in the SAV/EAV code.

Table 31-5. General case of progressive mode

EAV	Blanking	SAV	Blanking	Field 1 (F = 1)
⋮				
EAV	Blanking	SAV	Blanking	
EAV	Blanking	SAV	Data	
⋮				
EAV	Blanking	SAV	Data	

In progressive mode, COFIF will be ignored, but VSIF can generate an interrupt. When the VSYNC signal is provided by the camera sensor, it is called external VSYNC mode, and when the VSIF flag bit is decoded from the embedded code, it is called internal VSYNC mode. DCI can run both internal and external VSYNC mode.

Error Correction for CCIR656 Coding

According to the CCIR coding algorithm, the guard bits in SAV and EAV are coded in a way that allows 1-bit errors to be corrected, or 2-bit errors to be detected by the decoder. This feature is supported by the interlaced mode CCIR decoder in DCI.

For 1-bit error conditions, the user can choose to correct the error automatically, or simply display it as a status flag. For 2-bit error cases, the error will only be displayed as a status flag since the decoder cannot make corrections.

When the CCIR error interrupt is enabled (CCEIE is set), an interrupt is generated when an error is detected. If automatic error correction is enabled (AECEN is set in the DCI_CTL register), 1-bit errors will be corrected automatically. If 2-bit errors are enabled, the CCEIF

error flag will be set.

31.5.4. Capture data using snapshot or continuous capture modes

The DCI supports two capture modes: snapshot and continuous capture. Capture mode is configured by SNAP bit in DCI_CTL register.

After correctly configure, enable DCI and set CAP bit in DCI_CTL register, the DCI begins to detect frame start. It begins to capture data once a frame start is detected. In snapshot mode(SNAP=1), DCI automatically stops capturing and clears the CAP bit after a whole frame is captured completely, while in continuous mode, DCI prepares to capture the next frame. The DCI capture frequency is defined by FR[1:0] bits in continuous mode. For example, if FR[1:0]=00, DCI captures each frame, and if FR[1:0]=01, DCI only captures every alternate frame.

In continuous mode, software may clear the CAP bit any time when DCI is capturing data, but DCI doesn't stop capture immediately. It always stops after a complete frame ends. Software should read back the CAP bit to know whether the DCI stops effectively.

Use the end of the frame flag to count the frame, take part of the frame data.In CCIR656 interlaced scan mode, the end of Field1(the second field of the image,F=1) is considered to be the end of a frame.

31.5.5. Window function

DCI supports window function which is able to cut a part of image from the captured frame. Window function is enabled by setting WDEN bit in DCI_CTL register and this function is disabled in JPEG mode.

DCI continuously counts and calculates pixels' horizontal and vertical position during capturing, and compares the position and the values in crop window registers (DCI_CWSPOS and DCI_CWSZ), and then discards those pixels outside the crop window and only pushes pixels inside the window into the pixel FIFO.

If a frame ends when the vertical lines size defined in DCI_CWSZ is not reached yet, the end of frame flag will be triggered and DCI stops the capture. In CCIR656 interlaced scan mode, each field image is clipped.

31.5.6. Pixel formats, data padding and DMA

DCI supports various pixel digital encoding formats including YCbCr422/RGB565. However, DCI only receives these pixel data, pads these pixels into a word and push into a pixel FIFO. DCI doesn't perform any pixel format conversion or data processing and doesn't care about the detail of pixel format.

DCI uses a 32-bits width data buffer to transfer between DCI interface and pixel FIFO. These are two padding method in this module: byte padding and half-word padding, depending on

the data width of DCI interface. Data width is configured by DCIF[1:0] in DCI_CTL register. The data width is fixed to 8 in JPEG mode and embedded synchronization mode.

The DMA interface sends DMA request when a 32-bit data is received.

Byte padding mode

Byte padding mode is used if data width of DCI interface is 8. In byte padding mode four bytes are filled into the 32-bits width data buffer. In Non-JPEG mode, the DCI pushes the 32-bits buffer's data into the pixel FIFO when the buffer is full or meets the end of a line. In JPEG mode, the DCI pushes the 32-bits buffer's data into the pixel FIFO when the buffer is full or meets the end of a frame.

Table 31-6. Memory view in byte padding mode

D3[7:0]	D2[7:0]	D1[7:0]	D0[7:0]
D7[7:0]	D6[7:0]	D5[7:0]	D4[7:0]

Half-word padding mode

Half-word padding is used if data width of DCI interface is configured into 10/12/14. In this mode each pixel data is extended into 16-bits length by filling zero at higher position, so the 32-bits width data buffer is able to hold two pixel data. DCI pushes the data buffer into pixel FIFO each time the buffer is full or line end.

Table 31-7. Memory view in half-word padding mode

2'b00	D1[13:0]	2'b00	D0[13:0]
2'b00	D3[13:0]	2'b00	D2[13:0]
2'b00	D5[13:0]	2'b00	D4[13:0]
2'b00	D7[13:0]	2'b00	D6[13:0]

31.6. Interrupts

There are several status and error flags in DCI, and interrupts may be asserted from these flags. These status and error flags will assert global DCI interrupt if enabled by corresponding bit in DCI_INTEN. These flags are cleared by writing 1 into DCI_INTC register.

Table 31-8. Status/Error flags

Status Flag Name	Description
CCEIF	CCIR Error Interrupt Flag
COFIF	CCIR Change of Field Interrupt Flag
F1IF	CCIR Field 1 Interrupt Flag
F0IF	CCIR Field 0 Interrupt Flag
ELF	End of Line Flag
EFF	End of Frame Flag

OVRF	FIFO Overrun Flag
VSF	Frame VS Blank Flag
ESEF	Embedded Sync Error Flag

31.7. Register definition

DCI base address: 0x4802 0000

31.7.1. Control register (DCI_CTL)

Address offset: 0x00

Reset value: 0x0000 0000

This register has to be accessed by word (32-bit)

31	30	29	28	27	26	25	24	23	22	21	20	19	18	17	16
Reserved															EVSEN
															rw

15	14	13	12	11	10	9	8	7	6	5	4	3	2	1	0
AECEN	DCIEN	CCMOD	CCEN	DCIF[1:0]		FR[1:0]		VPS	HPS	CKS	ESM	JM	WDEN	SNAP	CAP
rw	rw	rw	rw	rw		rw		rw	rw	rw	rw	rw	rw	rw	rw

Bits	Fields	Descriptions
31:17	Reserved	Must be kept at reset value.
16	EVSEN	External vsync enable 0: External vsync mode is disabled 1: External vsync mode is enabled Only works in CCIR progressive mode
15	AECEN	Automatic error correction enable, 1bit correction 0: Automatic error correction is disabled 1: Automatic error correction is enabled Only works in CCIR interlaced mode
14	DCIEN	DCI Enable 0: DCI is disabled 1: DCI is enabled
13	CCMOD	CCIR mode select 0: CCIR progressive mode 1: CCIR interlace mode
12	CCEN	CCIR enable 0: CCIR is disabled 1: CCIR is enabled
11:10	DCIF[1:0]	Digital camera interface format 00: 8-bit data on every pixel clock 01: 10-bit data on every pixel clock 10: 12-bit data on every pixel clock

		11: 14-bit data on every pixel clock
9:8	FR[1:0]	Frame rate FR defines the frame capture rate in continuous capture mode 00: Capture all frames 01: Capture one in 2 frames 10: Capture one in 4 frames 11: Reserved
7	VPS	Vertical polarity selection 0: Low level during blanking period 1: High level during blanking period
6	HPS	Horizontal polarity selection 0: Low level during blanking period 1: High level during blanking period
5	CKS	Clock polarity selection 0: Capture at falling edge 1: Capture at rising edge
4	ESM	Embedded synchronous mode 0: Embedded synchronous mode is disabled 1: Embedded synchronous mode is enabled
3	JM	JPEG mode 0: JPEG mode is disabled 1: JPEG mode is enabled
2	WDEN	Window enable 0: Window is disabled 1: Window is enabled
1	SNAP	Snapshot mode 0: Continuous capture mode 1: Snapshot capture mode
0	CAP	Capture enable 0: Frame not captured 1: Frame is captured

31.7.2. Status register0 (DCI_STAT0)

Address offset: 0x04

Reset value: 0x0000 0003

This register has to be accessed by word (32-bit)

31	30	29	28	27	26	25	24	23	22	21	20	19	18	17	16

Reserved

15	14	13	12	11	10	9	8	7	6	5	4	3	2	1	0
Reserved													FV	VS	HS
													r	r	r

Bits	Fields	Descriptions
31:3	Reserved	Must be kept at reset value.
2	FV	FIFO valid 0: No valid pixel data in FIFO 1: Valid pixel data in FIFO
1	VS	VS line status 0: Not in vertical blanking period 1: In vertical blanking period
0	HS	HS line status 0: Not in horizontal blanking period 1: In horizontal blanking period

31.7.3. Status register1 (DCI_STAT1)

Address offset: 0x08

Reset value: 0x0000 0000

This register has to be accessed by word (32-bit)

31	30	29	28	27	26	25	24	23	22	21	20	19	18	17	16
Reserved															

15	14	13	12	11	10	9	8	7	6	5	4	3	2	1	0
Reserved							CCEF	COFF	F1F	F0F	ELF	VSF	ESEF	OVRF	EFF
							r	r	r	r	r	r	r	r	r

Bits	Fields	Descriptions
31:9	Reserved	Must be kept at reset value.
8	CCEF	CCIR error flag 0: No error occurs 1: Error is found on the SVA or EVA codes Only works in CCIR interlaced mode
7	COFF	CCIR change of field flag 0: No change of field event occurs 1: Change of field event occurs

		Only works in CCIR interlaced mode
6	F1F	CCIR field 1 0: Current field is not 1 1: Current field is 1 Only works in CCIR interlaced mode(cleared automatically when current field does not match)
5	F0F	CCIR field 0 0: Current field is not 0 1: Current field is 0 Only works in CCIR interlaced mode(cleared automatically when current field does not match)
4	ELF	End of line flag 0 : No end of line flag 1: A line is captured by DCI
3	VSF	Vsync flag 0: No vsync flag 1: A vsync blanking detected
2	ESEF	Embedded synchronous error flag 0: No embedded synchronous error flag 1: A embedded synchronous error detected
1	OVRF	FIFO overrun flag 0: No FIFO overrun 1: A FIFO overrun occurs
0	EFF	End of frame flag 0: No end of frame flag 1: A frame is captured by DCI

31.7.4. Interrupt enable register (DCI_INTEN)

Address offset: 0x0C

Reset value: 0x0000 0000

This register has to be accessed by word (32-bit)

31	30	29	28	27	26	25	24	23	22	21	20	19	18	17	16
Reserved															

15	14	13	12	11	10	9	8	7	6	5	4	3	2	1	0
Reserved							CCEIE	COFIE	F1IE	F0IE	ELIE	VSIE	ESEIE	OVRIE	EFIE
							rw	rw	rw	rw	rw	rw	rw	rw	rw

Bits	Fields	Descriptions
31:9	Reserved	Must be kept at reset value.
8	CCEIE	CCIR error Interrupt enable 0: CCIR error flag won't generate interrupt 1: CCIR error flag will generate interrupt
7	COFIE	CCIR change of field interrupt enable 0: CCIR change of field flag won't generate interrupt 1: CCIR change of field flag will generate interrupt
6	F1IE	CCIR field 1 interrupt enable 0: CCIR field 1 flag won't generate interrupt 1: CCIR field 1 flag will generate interrupt
5	F0IE	CCIR field 0 interrupt enable 0: CCIR field 0 won't generate interrupt 1: CCIR field 0 flag will generate interrupt
4	ELIE	End of line interrupt enable 0: End of line flag won't generate interrupt 1: End of line flag will generate interrupt
3	VSIE	Vsync interrupt enable 0: Vsync flag won't generate interrupt 1: Vsync flag will generate interrupt
2	ESEIE	Embedded synchronous error interrupt enable 0: Embedded synchronous error flag won't generate interrupt 1: Embedded synchronous error flag will generate interrupt
1	OVRIE	FIFO overrun interrupt enable 0: FIFO overrun won't generate interrupt 1: FIFO overrun will generate interrupt
0	EFIE	End of frame interrupt enable 0: End of frame flag won't generate interrupt 1: End of frame flag will generate interrupt

31.7.5. Interrupt flag register (DCI_INTF)

Address offset: 0x10

Reset value: 0x0000 0000

This register has to be accessed by word (32-bit)

31	30	29	28	27	26	25	24	23	22	21	20	19	18	17	16
Reserved															

15	14	13	12	11	10	9	8	7	6	5	4	3	2	1	0
Reserved							CCEIF	COFIF	F1IF	F0IF	ELIF	VSIF	ESEIF	OVRIF	EFIF
							r	r	r	r	r	r	r	r	r

Bits	Fields	Descriptions
31:9	Reserved	Must be kept at reset value.
8	CCEIF	CCIR error interrupt flag Only works in CCIR interlaced mode, error is found on the SVA or EVA codes.
7	COFIF	CCIR change of field interrupt flag Only works in CCIR interlaced mode
6	F1IF	CCIR field 1 interrupt flag Only works in CCIR interlaced mode(cleared automatically when current field does not match)
5	F0IF	CCIR field 0 interrupt flag Only works in CCIR interlaced mode(Cleared automatically when current field does not match)
4	ELIF	End of line interrupt flag
3	VSIF	Vsync interrupt flag
2	ESEIF	Embedded synchronous error interrupt flag
1	OVRIF	FIFO overrun interrupt flag
0	EFIF	End of frame interrupt flag

31.7.6. Interrupt flag clear register (DCI_INTC)

Address offset: 0x14

Reset value: 0x0000 0000

This register has to be accessed by word (32-bit)

31	30	29	28	27	26	25	24	23	22	21	20	19	18	17	16
Reserved															

15	14	13	12	11	10	9	8	7	6	5	4	3	2	1	0
Reserved							CCEFC	COFFC	F1FC	F0FC	ELFC	VSFC	ESEFC	OVRFC	EFFC
							w	w	w	w	w	w	w	w	w

Bits	Fields	Descriptions
31:9	Reserved	Must be kept at reset value.
8	CCEFC	CCIR error flag clear

		Write 1 to clear CCIR error flag
7	COFFC	CCIR change of field flag clear Write 1 to clear CCIR change of field flag
6	F1FC	CCIR field 1 interrupt flag clear Write 1 to clear CCIR field 1 interrupt flag
5	F0FC	CCIR field 0 interrupt flag clear Write 1 to clear CCIR field 0 interrupt flag
4	ELFC	End of line flag clear Write 1 to clear end of line flag
3	VSFC	Vsync flag clear Write 1 to clear vsync flag
2	ESEFC	Clear embedded synchronous error flag Write 1 to clear embedded synchronous error flag
1	OVRFC	Clear FIFO overrun flag Write 1 to clear FIFO overrun flag
0	EFFC	Clear end of frame flag Write 1 to clear end of frame flag

31.7.7. Synchronization codes register (DCI_SC)

Address offset: 0x18

Reset value: 0x0000 0000

This register has to be accessed by word (32-bit)

31	30	29	28	27	26	25	24	23	22	21	20	19	18	17	16
FE[7:0]								LE[7:0]							
rw								rw							

15	14	13	12	11	10	9	8	7	6	5	4	3	2	1	0
LS[7:0]								FS[7:0]							
rw								rw							

Bits	Fields	Descriptions
31:24	FE[7:0]	Frame end code in embedded synchronous mode
23:16	LE[7:0]	Line end code in embedded synchronous mode
15:8	LS[7:0]	Line start code in embedded synchronous mode
7:0	FS[7:0]	Frame start code in embedded synchronous mode

31.7.8. Synchronization codes unmask register (DCI_SCUMSK)

Address offset: 0x1C

Reset value: 0x0000 0000

This register has to be accessed by word (32-bit)

31	30	29	28	27	26	25	24	23	22	21	20	19	18	17	16
FEM[7:0]								LEM[7:0]							
rw								rw							

15	14	13	12	11	10	9	8	7	6	5	4	3	2	1	0
LSM[7:0]								FSM[7:0]							
rw								rw							

Bits	Fields	Descriptions
31:24	FEM[7:0]	Frame end code unmask bits in embedded synchronous mode
23:16	LEM[7:0]	Line end code unmask bits in embedded synchronous mode
15:8	LSM[7:0]	Line start code unmask bits in embedded synchronous mode
7:0	FSM[7:0]	Frame start code unmask bits in embedded synchronous mode

31.7.9. Cropping window start position register (DCI_CWSPOS)

Address offset: 0x20

Reset value: 0x0000 0000

This register has to be accessed by word (32-bit)

31	30	29	28	27	26	25	24	23	22	21	20	19	18	17	16
Reserved			WVSP[12:0]												
			rw												

15	14	13	12	11	10	9	8	7	6	5	4	3	2	1	0
Reserved		WHSP[13:0]													
		rw													

Bits	Fields	Descriptions
31:29	Reserved	Must be kept at reset value.
28:16	WVSP[12:0]	Window vertical start position Zero means the first line
15:14	Reserved	Must keep the reset value
13:0	WHSP[13:0]	Window horizontal start position Zero means the first pixel clock in a line

31.7.10. Cropping window size register (DCI_CWSZ)

Address offset: 0x24

Reset value: 0x0000 0000

This register has to be accessed by word (32-bit)

31	30	29	28	27	26	25	24	23	22	21	20	19	18	17	16
Reserved		WVSZ[13:0]													
								rw							

15	14	13	12	11	10	9	8	7	6	5	4	3	2	1	0
Reserved		WHSZ[13:0]													
								rw							

Bits	Fields	Descriptions
31:30	Reserved	Must be kept at reset value.
29:16	WVSZ[13:0]	Window vertical size WVSZ=X means X+1 lines
15:14	Reserved	Must be kept at reset value.
13:0	WHSZ[13:0]	Window horizontal size WHSZ=X means X+1 pixels clock in a line

31.7.11. DATA register (DCI_DATA)

Address offset: 0x28

Reset value: 0x0000 0000

This register has to be accessed by word (32-bit)

31	30	29	28	27	26	25	24	23	22	21	20	19	18	17	16
DT3[[7:0]								DT2[7:0]							
r								r							

15	14	13	12	11	10	9	8	7	6	5	4	3	2	1	0
DT1[7:0]								DT0[7:0]							
r								r							

Bits	Fields	Descriptions
31:24	DT3[7:0]	Pixel data 3
23:16	DT2[7:0]	Pixel data 2
15:8	DT1[7:0]	Pixel data 1
7:0	DT0[7:0]	Pixel data 0

32. TFT-LCD interface (TLI)

32.1. Overview

The TLI (TFT-LCD Interface) module handles the synchronous LCD interface and provides pixel data, clock and timing signals for passive LCD display. It supports a wide variety of displays with fully programmable timing parameters. A built-in DMA engine continuously move data from system memory to TLI and then, output to an external LCD display. Two separate layers are supported in TLI, as well as layer window and blending function.

32.2. Characteristics

- Supports up to 24 bits data output per pixel
- Supports up to 2048 x 2048 resolution
- Timing parameters is fully programmable
- Built-in DMA engine to handle frame data copy
- 2 separate frame layers with window and blending function
- Support various pixel formats: ARGB8888, RGB888, RGB565, etc
- Support CLUT (Color Look-Up-Table) and Color-Keying format
- Dithering operation to low bits of a pixel

32.3. Block diagram

Figure 32-1. TLI module block diagram shows the block diagram of the TLI module. There are three clock domains in TLI. The register works in APB clock and is visited by system APB bus. The Pixel DMA module works in AXI clock and fetches pixel data from system memory using AXI bus. The remaining modules work in TLI clock. The TLI clock is divided from PLL2 clock. The parameters of PLL2 and dividing factor are configured in RCU module.

Figure 32-1. TLI module block diagram

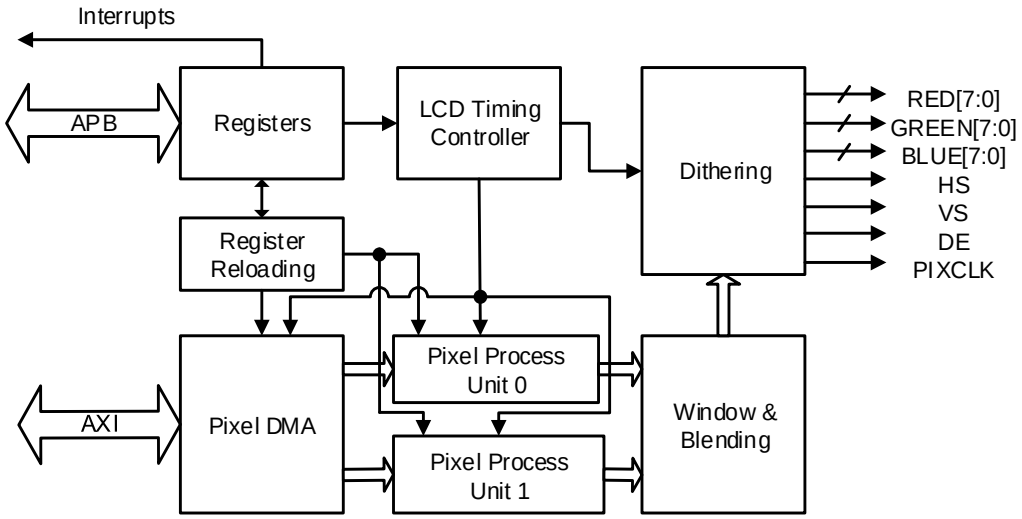

32.4. Signal description

TLI provides a 24-bit RGB Parallel display interface, which is shown in ***Table 32-1. Pins of display interface provided by TLI***.

Table 32-1. Pins of display interface provided by TLI

Direction	Name	Width	Description
Output	HS	1	Horizontal synchronous
Output	VS	1	Vertical synchronous
Output	DE	1	Data enable
Output	PIXCLK	1	Pixel clock
Output	RED[7:0]	8	Pixel red data
Output	GREEN[7:0]	8	Pixel green data
Output	BLUE[7:0]	8	Pixel blue data

32.5. Function overview

32.5.1. LCD display timing

LCD interface is a synchronous data interface with pixel clock, pixel data and horizontal and vertical synchronous signals. The ***Figure 32-2. Display timing diagram*** shows the signal timing of HS and VS for a whole frame. The timing parameters are configured in TLI_SPSZ, TLI_BPSZ, TLI_ASZ and TLI_TSZ registers. The timing values in these registers assume that the position of the first point is (0, 0).

Figure 32-2. Display timing diagram

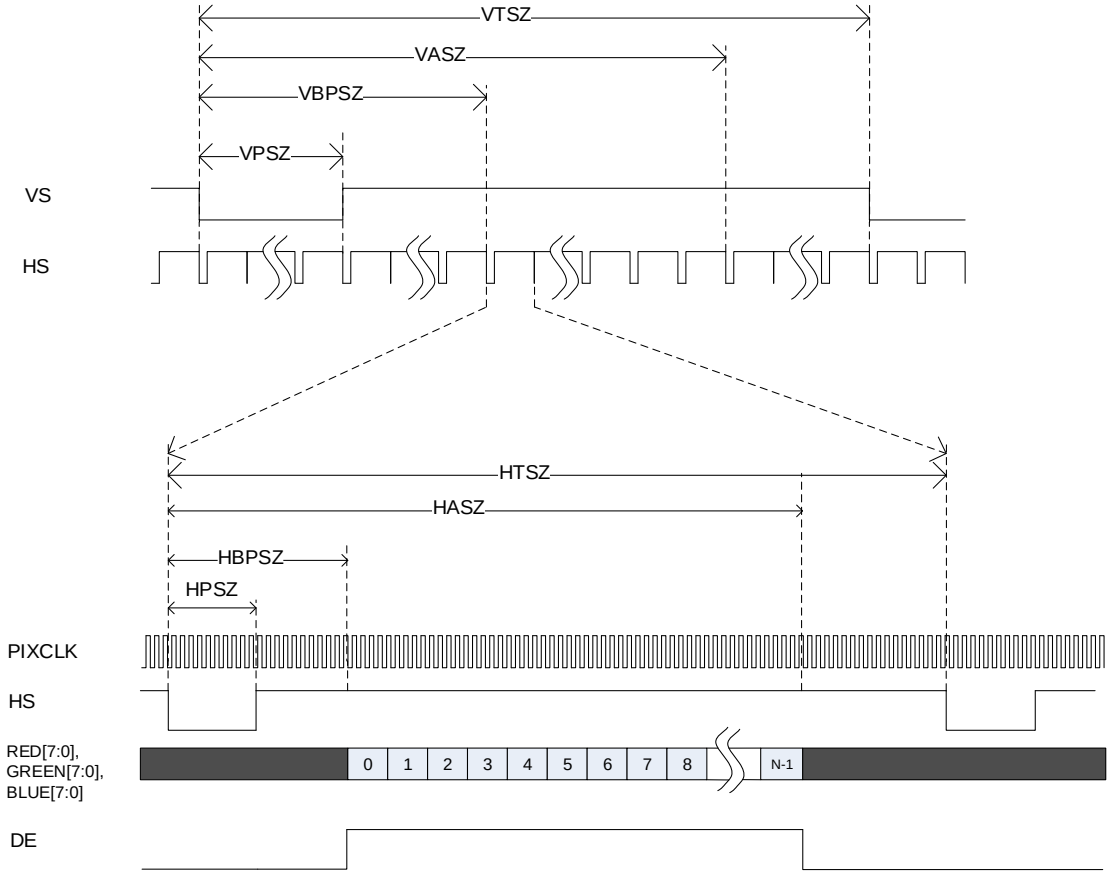

32.5.2. Pixel DMA function

Following the configuration of register module, the Pixel DMA reads pixel data from memory to the pixel buffer in internal PPU (Pixel Process Unit) continuously.

After enabled, the Pixel DMA begins to fetch pixel data from system and push these data into the pixel buffer in PPU as long as the pixel buffer is not full. It always tries to use BURST16 AXI transaction to fetch pixel data.

TLI supports 2 separate frame layers and each layer has a separate frame buffer address in system. The Pixel DMA has only one AXI access interface, so it will perform round-robin arbitration between the 2 layers during pixels fetching, if both layers are enabled.

FBADD in TLI_LxFBADDR register define the frame buffer address or fetching address of each layer.

FLL in TLI_LxFLLEN defines the line length in bytes of a frame. If the length of a frame line in bytes is N, program FLL with N+7.

There may be some spacing between two frame lines in system memory and the spacing information is defined by STDOFF in TLI_LxFLLEN register. For example if the address of the first pixel in a frame line is M, and the address of the first pixel in the next frame line will be M+STDOFF. If there is no memory spacing between frame lines, just program STDOFF

with FLL-3.

FTLN in TLI_LxFTLN register defines the number of lines in a frame.

32.5.3. Pixel formats

The Pixel DMA pushes pixel data into PPU in double word format and PPU (Pixel Process Unit) is responsible for converting various pixel formats into an internal ARGB8888 format. TLI supports up to eight pixel formats as shown in ***Table 32-2. Supported pixel formats***. The PPF[2:0] in TLI_LxPPF register defines the pixel format.

ARGB8888 format needs 8-bits data in each channel (Alpha, Red, Green and Blue), while ARGB1555 and ARGB4444 formats have fewer bits than 8 in some channels. PPU converts these formats into ARGB8888 by filling LSBs with MSBs for each channel. When processing RGB888 and RGB565 formats, PPU assumes that Alpha=255 and also fill filling LSBs with MSBs if the channel bit number less than 8.

AL88, AL44 and L8 formats are LUT (Look-Up-Table) formats. In these channels, L is the address of the look-up table. TLI has 2 internal look-up tables: one for each layer. The internal look-up table size is 256x24bits (256 entries and each entry stores a 24-bits RGB value). When processing LUT format pixel, PPU reads out an entry from the look-up table and uses this entry as the RGB value. Because the address of look-up table is 8-bit, PPU also fill LSBs with MSBs if L channel has bits less than 8. The entries in the look-up tables are uninitialized after reset, so the application should initialize the look-up table with proper value using TLI_LxLUT register before display a look-up table format layer. The TLI_LxLUT is a write-only register and a write operation to this register will write an entry to the look-up table.

Each layer is able to be configured into color keying mode. The register LxCKEY defines a RGB value. When color keying mode is enabled for a layer, PPU will compare each RGB value of each pixel in this layer with the LxCKEY and force the pixel's ARGB value to 0 if the value matches.

Table 32-2. Supported pixel formats

PPF[2:0]	Pixel Format
000	ARGB8888
001	RGB888
010	RGB565
011	ARGB1555
100	ARGB4444
111	AL88
101	L8
110	AL44

32.5.4. Layer window and blending function

TLI supports window function for each layer and blending function between two layers. TLI

first perform window operation to each layer and then blend two layers into a frame.

The window function defines a display window, and each layer has separate window parameters defined by TLI_LxHPOS and TLI_LxVPOS registers. These window parameters define a window inside the layer. The pixel inside the window will keep its original value, while the pixel outside will be replaced with a default pixel defined in TLI_LxDC register.

The blending units first blends Layer0 and BG Layer into a temporary layer, and then blends Layer1 and the temporary layer into destination layer. BG Layer's ARGB value is defined TLI_BGC register. If a layer is disabled, blending function uses the layer's default color.

Figure 32-3. Block diagram of Blending

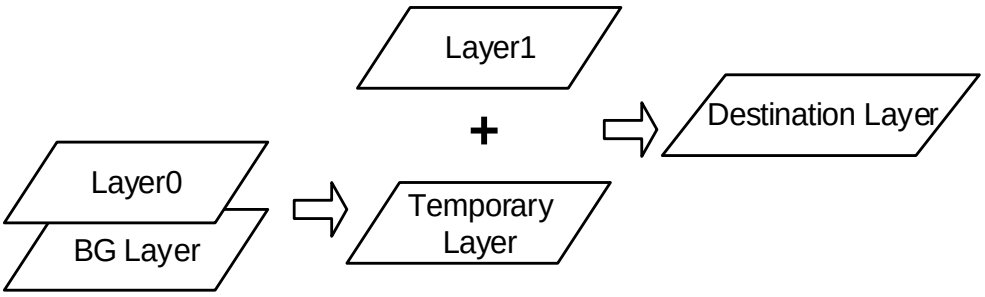

Blending formula

The general blending formula is:

$$BC=BF_1*C+BF_2*C_S \quad (32\text{-}1)$$

- BC is blended color
- BF_1 is alpha calculation factor 1 of blending method
- C is current layer color
- BF_2 is alpha calculation factor 2 of blending method
- C_S is subjacent layers blended color

The blend factor of current pixel is either normalization Pixel Alpha x normalization Specified Alpha or normalization Specified Alpha which is decided by register configuration.

32.5.5. Layer configuration reload

As is described above, each layer has its own frame buffer, pixel format, window, default color configuration registers and each register has a shadow register. A shadow register share the same address with the real register. Each time when the application writes to a layer-related register address, the corresponding shadow registers is updated immediately, while the real register will not change until a reload operation and only the real register has effect to the TLI function.

There are two methods for application to trigger a reload operation: request reload and frame blank reload. For request reload mode, TLI begins to load the shadow registers into real registers immediately after application set RQR bit in TLI_RL register. For frame blank reload mode, after setting FBR bit in TLI_RL register, the TLI waits for a frame vertical blanking and

load the shadow registers. In both modes, hardware automatically clears the RQR or FBR bit after successfully reload.

32.5.6. Dithering function

The dithering module adds a 2-bit pseudo-random value to each pixel channel. This function is able to make the image smoother when 18-bits interface is used to display a 24-bit data. Application may switch on this function using DFEN bit in TLI_CTL register.

32.6. Interrupts

There are several status and error flags in TLI, and interrupt may be asserted from these flags. The status flags will assert global interrupt, while the error flags will assert error interrupt.

Table 32-3. Status flags

Status Flag Name	Description
LMF	Line mark flag
LCRF	Layer configuration reloaded flag

Table 32-4. Error flags

Error Flag Name	Description
TEF	Transaction error flag
FEF	FIFO error flag

32.7. Register definition

TLI base address: 0x5000 1000

32.7.1. Synchronous pulse size register (TLI_SPSZ)

Address offset: 0x08

Reset value: 0x0000 0000

This register has to be accessed by word (32-bit).

31	30	29	28	27	26	25	24	23	22	21	20	19	18	17	16
Reserved				HPSZ[11:0]											
				rw											

15	14	13	12	11	10	9	8	7	6	5	4	3	2	1	0
Reserved				VPSZ[11:0]											
				rw											

Bits	Fields	Descriptions
31:28	Reserved	Must be kept at reset value.
27:16	HPSZ[11:0]	Size of the horizontal synchronous pulse The HPSZ value should be configured to the pixels number of horizontal synchronous pulse minus 1.
15:12	Reserved	Must be kept at reset value.
11:0	VPSZ[11:0]	Size of the vertical synchronous pulse The VPSZ value should be configured to the pixels number of vertical synchronous pulse minus 1.

32.7.2. Back-porch size register (TLI_BPSZ)

Address offset: 0x0C

Reset value: 0x0000 0000

This register has to be accessed by word (32-bit).

31	30	29	28	27	26	25	24	23	22	21	20	19	18	17	16
Reserved				HBPSZ[11:0]											
				rw											

15	14	13	12	11	10	9	8	7	6	5	4	3	2	1	0
Reserved				VBPSZ[11:0]											
				rw											

Bits	Fields	Descriptions
31:28	Reserved	Must be kept at reset value.
27:16	HBPSZ[11:0]	Size of the horizontal back porch plus synchronous pulse

		The HBPSZ value should be configured to the pixels number of horizontal back porch and synchronous pulse minus 1.
15:12	Reserved	Must be kept at reset value.
11:0	VBPSZ[11:0]	Size of the vertical back porch plus synchronous pulse The VBPSZ value should be configured to the pixels number of vertical back porch and synchronous pulse minus 1.

32.7.3. Active size register (TLI_ASZ)

Address offset: 0x10

Reset value: 0x0000 0000

This register has to be accessed by word (32-bit).

31	30	29	28	27	26	25	24	23	22	21	20	19	18	17	16
Reserved				HASZ[11:0]											
				rw											

15	14	13	12	11	10	9	8	7	6	5	4	3	2	1	0
Reserved				VASZ[11:0]											
				rw											

Bits	Fields	Descriptions
31:28	Reserved	Must be kept at reset value.
27:16	HASZ[11:0]	Size of the horizontal active area width plus back porch and synchronous pulse The HASZ value should be configured to the pixels number of horizontal active area width plus back porch and synchronous pulse minus 1.
15:12	Reserved	Must be kept at reset value.
11:0	VASZ[11:0]	Size of the vertical active area width plus back porch and synchronous pulse The VASZ value should be configured to the pixels number of vertical active area height plus back porch and synchronous pulse minus 1.

32.7.4. Total size register (TLI_TSZ)

Address offset: 0x14

Reset value: 0x0000 0000

This register has to be accessed by word (32-bit).

31	30	29	28	27	26	25	24	23	22	21	20	19	18	17	16
Reserved				HTSZ[11:0]											
				rw											

15	14	13	12	11	10	9	8	7	6	5	4	3	2	1	0
Reserved				VTSZ[11:0]											
				rw											

Bits	Fields	Descriptions
31:28	Reserved	Must be kept at reset value.
27:16	HTSZ[11:0]	Horizontal total size of the display, including active area, back porch, synchronous pulse and front porch The HTSZ value should be configured to the pixels number of horizontal active area width plus back porch, front porch and synchronous pulse minus 1.
15:12	Reserved	Must be kept at reset value.
11:0	VTSZ[11:0]	Vertical total size of the display, including active area, back porch, synchronous pulse and front porch The VTSZ value should be configured to the pixels number of vertical active area height plus back porch, front porch and synchronous pulse minus 1.

32.7.5. Control register (TLI_CTL)

Address offset: 0x18

Reset value: 0x0000 2220

This register has to be accessed by word (32-bit).

31	30	29	28	27	26	25	24	23	22	21	20	19	18	17	16
HPPS	VPPS	DEPS	CLKPS	Reserved											DFEN
rw	rw	rw	rw												rw

15	14	13	12	11	10	9	8	7	6	5	4	3	2	1	0
Reserved	RDB[2:0]			Reserved	GDB[2:0]			Reserved	BDB[2:0]			Reserved			TLIEN
	r				r				r						rw

Bits	Fields	Descriptions
31	HPPS	Horizontal pulse polarity selection 0: Horizontal synchronous pulse active low 1: Horizontal synchronous pulse active high
30	VPPS	Vertical pulse polarity selection 0: Vertical synchronous pulse active low 1: Vertical synchronous pulse active high
29	DEPS	Not data enable polarity selection 0: Not data enable active low 1: Not data enable active high
28	CLKPS	Pixel clock polarity selection 0: Pixel clock is TLI clock 1: Pixel clock is inverted TLI clock
27:17	Reserved	Must be kept at reset value.
16	DFEN	Dither function enable

		0: Dither function disable 1: Dither function enable
15	Reserved	Must be kept at reset value.
14:12	RDB[2:0]	Red channel dither bits number Fixed to 2, read only
11	Reserved	Must be kept at reset value.
10:8	GDB[2:0]	Green channel dither bits number Fixed to 2, read only
7	Reserved	Must be kept at reset value.
6:4	BDB[2:0]	Blue channel dither bits number Fixed to 2, read only
3:1	Reserved	Must be kept at reset value.
0	TLIEN	TLI enable bit 0: TLI disable 1: TLI enable

32.7.6. Reload layer register (TLI_RL)

Address offset: 0x24

Reset value: 0x0000 0000

This register has to be accessed by word (32-bit).

31	30	29	28	27	26	25	24	23	22	21	20	19	18	17	16
Reserved															

15	14	13	12	11	10	9	8	7	6	5	4	3	2	1	0
Reserved														FBR	RQR
														rw	rw

Bits	Fields	Descriptions
31:2	Reserved	Must be kept at reset value.
1	FBR	Frame blank reload This bit is set by software and cleared by hardware after reloading 0: Reload disable 1: The layer configuration will be reloaded into core at frame blank
0	RQR	Request reload This bit is set by software and cleared by hardware after reloading 0: Reload disable 1: The layer configuration will be reloaded into core after this bit sets

32.7.7. Background color register (TLI_BGC)

Address offset: 0x2C

Reset value: 0x0000 0000

This register has to be accessed by word (32-bit).

31	30	29	28	27	26	25	24	23	22	21	20	19	18	17	16
Reserved								BVR[7:0]							
												rw			

15	14	13	12	11	10	9	8	7	6	5	4	3	2	1	0
BVG[7:0]								BVB[7:0]							
			rw									rw			

Bits	Fields	Descriptions
31:24	Reserved	Must be kept at reset value.
23:16	BVR[7:0]	Background value red
15:8	BVG[7:0]	Background value green
7:0	BVB[7:0]	Background value blue

32.7.8. Interrupt enable register (TLI_INTEN)

Address offset: 0x34

Reset value: 0x0000 0000

This register has to be accessed by word (32-bit).

31	30	29	28	27	26	25	24	23	22	21	20	19	18	17	16
Reserved															

15	14	13	12	11	10	9	8	7	6	5	4	3	2	1	0
Reserved												LCRIE	TEIE	FEIE	LMIE
												rw	rw	rw	rw

Bits	Fields	Descriptions
31:4	Reserved	Must be kept at reset value.
3	LCRIE	Layer configuration reloaded interrupt enable 0: Layer configuration reloaded flag won't generate an interrupt 1: Layer configuration reloaded flag will generate an interrupt
2	TEIE	Transaction error interrupt enable 0: Transaction error flag won't generate an interrupt 1: Transaction error flag will generate an interrupt
1	FEIE	FIFO error interrupt enable 0: FIFO error flag won't generate an interrupt

		1: FIFO error flag will generate an interrupt
0	LMIE	Line mark interrupt enable 0: Line mark flag won't generate an interrupt 1: Line mark flag will generate an interrupt

32.7.9. Interrupt flag register (TLI_INTF)

Address offset: 0x38

Reset value: 0x0000 0000

This register has to be accessed by word (32-bit).

31	30	29	28	27	26	25	24	23	22	21	20	19	18	17	16
Reserved															

15	14	13	12	11	10	9	8	7	6	5	4	3	2	1	0
Reserved												LCRF	TEF	FEF	LMF
												r	r	r	r

Bits	Fields	Descriptions
31:4	Reserved	Must be kept at reset value.
3	LCRF	Layer configuration reloaded flag 0: No layer configuration reloaded flag 1: Layer configuration is reloaded triggered by FBR bit in TLI_RL
2	TEF	Transaction error flag 0: No transaction error flag 1: A transaction error on AHB bus occurs
1	FEF	FIFO error flag 0: No FIFO error flag 1: A FIFO under-run error occurs The under-run error occurs when the value written in TLI_LxFLLEN and TLI_LxFTLN is less than required.
0	LMF	Line mark flag 0: No line mark flag 1: Line number reaches the specified value in TLI_LM

32.7.10. Interrupt flag clear register (TLI_INTC)

Address offset: 0x3C

Reset value: 0x0000 0000

This register has to be accessed by word (32-bit).

31	30	29	28	27	26	25	24	23	22	21	20	19	18	17	16

Reserved

15	14	13	12	11	10	9	8	7	6	5	4	3	2	1	0
Reserved												LCRC	TEC	FEC	LMC
												w	w	w	w

Bits	Fields	Descriptions
31:4	Reserved	Must be kept at reset value.
3	LCRC	Layer configuration reloaded flag clear Write 1 to clear layer configuration reloaded flag
2	TEC	Transaction error flag clear Write 1 to clear transaction error flag
1	FEC	FIFO error flag clear Write 1 to clear FIFO error flag
0	LMC	Line mark flag clear Write 1 to clear line mark flag

32.7.11. Line mark register (TLI_LM)

Address offset: 0x40

Reset value: 0x0000 0000

This register has to be accessed by word (32-bit).

31	30	29	28	27	26	25	24	23	22	21	20	19	18	17	16
Reserved															

15	14	13	12	11	10	9	8	7	6	5	4	3	2	1	0
Reserved					LM[10:0]										
										rw					

Bits	Fields	Descriptions
31:11	Reserved	Must be kept at reset value.
10:0	LM[10:0]	Line mark value The LMF bit in TLI_INTF will be set after the line number reaches this value

32.7.12. Current pixel position register (TLI_CPPOS)

Address offset: 0x44

Reset value: 0x0000 0000

This register has to be accessed by word (32-bit).

31	30	29	28	27	26	25	24	23	22	21	20	19	18	17	16
HPOS[15:0]															

								r							
15	14	13	12	11	10	9	8	7	6	5	4	3	2	1	0
VPOS[15:0]															
								r							

Bits	Fields	Descriptions
31:16	HPOS[15:0]	Horizontal position Horizontal position of the current displayed pixel
15:0	VPOS[15:0]	Vertical position Vertical position of the current displayed pixel

32.7.13. Status register (TLI_STAT)

Address offset: 0x48

Reset value: 0x0000 000F

This register has to be accessed by word (32-bit).

31	30	29	28	27	26	25	24	23	22	21	20	19	18	17	16
Reserved															

15	14	13	12	11	10	9	8	7	6	5	4	3	2	1	0
Reserved												HS	VS	HDE	VDE
												r	r	r	r

Bits	Fields	Descriptions
31:4	Reserved	Must be kept at reset value.
3	HS	Current HS status of the TLI
2	VS	Current VS status of the TLI
1	HDE	Current HDE status 0: HPOS in TLI_CPPOS register is not between the HBPSZ in TLI_BPSZ register and HASZ in TLI_ASZ register. 1: HPOS in TLI_CPPOS register is between the HBPSZ in TLI_BPSZ register and HASZ in TLI_ASZ register.
0	VDE	Current VDE status 0: VPOS in TLI_CPPOS register is not between the VBPSZ in TLI_BPSZ register and VASZ in TLI_ASZ register. 1: VPOS in TLI_CPPOS register is between the VBPSZ in TLI_BPSZ register and VASZ in TLI_ASZ register.

32.7.14. Layer x control register (TLI_LxCTL) (x = 0,1)

Address offset: 0x84+0x80 * x

Reset value: 0x0000 0000

This register has to be accessed by word (32-bit).

31	30	29	28	27	26	25	24	23	22	21	20	19	18	17	16
Reserved															

15	14	13	12	11	10	9	8	7	6	5	4	3	2	1	0
Reserved											LUTEN	Reserved		CKEYEN	LEN
											rw			rw	rw

Bits	Fields	Descriptions
31:5	Reserved	Must be kept at reset value.
4	LUTEN	LUT enable 0: LUT is disabled 1: LUT is enabled
3:2	Reserved	Must be kept at reset value.
1	CKEYEN	Color keying enable 0: Color keying is disabled 1: Color keying is enabled
0	LEN	Layer enable 0: This layer is disabled 1: This layer is enabled

32.7.15. Layer x horizontal position parameters register (TLI_LxHPOS) (x = 0,1)

Address offset: 0x88+0x80 * x

Reset value: 0x0000 0000

This register has to be accessed by word (32-bit).

31	30	29	28	27	26	25	24	23	22	21	20	19	18	17	16
Reserved				WRP[11:0]											
				rw											

15	14	13	12	11	10	9	8	7	6	5	4	3	2	1	0
Reserved				WLP[11:0]											
				rw											

Bits	Fields	Descriptions
31:28	Reserved	Must be kept at reset value.
27:16	WRP[11:0]	Window right position
15:12	Reserved	Must be kept at reset value.
11:0	WLP[11:0]	Window left position

32.7.16. Layer x vertical position parameters register (TLI_LxVPOS) (x = 0,1)

Address offset: 0x8C+0x80 * x

Reset value: 0x0000 0000

This register has to be accessed by word (32-bit).

31	30	29	28	27	26	25	24	23	22	21	20	19	18	17	16
Reserved				WBP[11:0]											
				rw											

15	14	13	12	11	10	9	8	7	6	5	4	3	2	1	0
Reserved				WTP[11:0]											
				rw											

Bits	Fields	Descriptions
31:28	Reserved	Must be kept at reset value.
27:16	WBP[11:0]	Window bottom position
15:12	Reserved	Must be kept at reset value.
11:0	WTP[11:0]	Window top position

32.7.17. Layer x color key register (TLI_LxCKEY) (x = 0,1)

Address offset: 0x90+0x80 * x

Reset value: 0x0000 0000

This register has to be accessed by word (32-bit).

31	30	29	28	27	26	25	24	23	22	21	20	19	18	17	16
Reserved								CKEYR[7:0]							
											rw				

15	14	13	12	11	10	9	8	7	6	5	4	3	2	1	0
CKEYG[7:0]								CKEYB[7:0]							
				rw								rw			

Bits	Fields	Descriptions
31:24	Reserved	Must be kept at reset value.
23:16	CKEYR[7:0]	Color key red
15:8	CKEYG[7:0]	Color key green
7:0	CKEYB[7:0]	Color key blue

If the pixel RGB value in a layer equals the value in TLI_LxCKEY, the pixel RGB value is reset to 0. That means these pixels is transparent to other layers.

32.7.18. Layer x packeted pixel format register (TLI_LxPPF) (x = 0,1)

Address offset: 0x94+0x80 * x

Reset value: 0x0000 0000

This register has to be accessed by word (32-bit).

31	30	29	28	27	26	25	24	23	22	21	20	19	18	17	16
Reserved															

15	14	13	12	11	10	9	8	7	6	5	4	3	2	1	0
Reserved													PPF[2:0]		
														rw	

Bits	Fields	Descriptions
31:3	Reserved	Must be kept at reset value.
2:0	PPF[2:0]	Packeted pixel format These bits configures the packeted pixel format 000: ARGB8888 001: RGB888 010: RGB565 011: ARGB1555 100: ARGB4444 101: L8 110: AL44 111: AL88

32.7.19. Layer x specified alpha register (TLI_LxSA) (x = 0,1)

Address offset: 0x98+0x80 * x

Reset value: 0x0000 00FF

This register has to be accessed by word (32-bit).

31	30	29	28	27	26	25	24	23	22	21	20	19	18	17	16
Reserved															

15	14	13	12	11	10	9	8	7	6	5	4	3	2	1	0
Reserved								SA[7:0]							
											rw				

Bits	Fields	Descriptions
31:8	Reserved	Must be kept at reset value.
7:0	SA [7:0]	Specified alpha The alpha value used for blending

32.7.20. Layer x default color register (TLI_LxDC) (x = 0,1)

Address offset: 0x9C+0x80 * x

Reset value: 0x0000 0000

This register has to be accessed by word (32-bit).

31	30	29	28	27	26	25	24	23	22	21	20	19	18	17	16
DCA[7:0]								DCR[7:0]							
rw								rw							

15	14	13	12	11	10	9	8	7	6	5	4	3	2	1	0
DCG[7:0]								DCB[7:0]							
rw								rw							

Bits	Fields	Descriptions
31:24	DCA[7:0]	The default color alpha
23:16	DCR[7:0]	The default color red
15:8	DCG[7:0]	The default color green
7:0	DCB[7:0]	The default color blue

The default color of a layer takes effect when the layer is disabled or outside the window defined in TLI_LxHPOS and TLI_LxVPOS.

32.7.21. Layer x blending register (TLI_LxBLEND) (x = 0,1)

Address offset: 0xA0+0x80 * x

Reset value: 0x0000 0607

This register has to be accessed by word (32-bit).

31	30	29	28	27	26	25	24	23	22	21	20	19	18	17	16
Reserved															

15	14	13	12	11	10	9	8	7	6	5	4	3	2	1	0
Reserved					ACF1[2:0]			Reserved					ACF2[2:0]		
					rw									rw	

Bits	Fields	Descriptions
31:11	Reserved	Must be kept at reset value.
10:8	ACF1[2:0]	Alpha calculation factor 1 of blending method 000: Reserved 001: Reserved 010: Reserved 011: Reserved 100: normalization Specified Alpha 101: Reserved

		110: normalization Pixel Alpha x normalization Specified Alpha 111:Reserved
7:3	Reserved	Must be kept at reset value.
2:0	ACF2[2:0]	Alpha calculation factor 2 of blending method 000: Reserved 001: Reserved 010: Reserved 011: Reserved 100: Reserved 101:1- normalization specified alpha 110: Reserved 111: 1-normalization pixel alpha x normalization specified alpha

32.7.22. Layer x frame base address register (TLI_LxFBADDR) (x = 0,1)

Address offset: 0xAC+0x80 * x

Reset value: 0x0000 0000

This register has to be accessed by word (32-bit).

31	30	29	28	27	26	25	24	23	22	21	20	19	18	17	16
FBADD[31:16]															
rw															

15	14	13	12	11	10	9	8	7	6	5	4	3	2	1	0
FBADD[15:0]															
rw															

Bits	Fields	Descriptions
31:0	FBADD[[31:0]	Frame buffer base address The base address of frame buffer

32.7.23. Layer x frame line length register (TLI_LxFLLEN) (x = 0,1)

Address offset: 0xB0+0x80 * x

Reset value: 0x0000 0000

This register has to be accessed by word(32-bit).

31	30	29	28	27	26	25	24	23	22	21	20	19	18	17	16
Reserved		STDOFF[13:0]													
		rw													

15	14	13	12	11	10	9	8	7	6	5	4	3	2	1	0
Reserved		FLL[13:0]													
		rw													

Bits	Fields	Descriptions

31:30	Reserved	Must be kept at reset value.
29:16	STDOFF[13:0]	Frame buffer stride offset This value defines the bytes number from start of a line to the start of next line
15:14	Reserved	Must be kept at reset value.
13:0	FLL[13:0]	Frame line length This value defines the bytes number of a line plus 7

32.7.24. Layer x frame total line number register (TLI_LxFTLN) (x = 0,1)

Address offset: 0xB4+0x80 * x

Reset value: 0x0000 0000

This register has to be accessed by word (32-bit).

31	30	29	28	27	26	25	24	23	22	21	20	19	18	17	16
Reserved															

15	14	13	12	11	10	9	8	7	6	5	4	3	2	1	0
Reserved					FTLN[10:0]										
										rw					

Bits	Fields	Descriptions
31:11	Reserved	Must be kept at reset value.
10:0	FTLN[10:0]	Frame total line number This value defines the line number in a frame

32.7.25. Layer x look up table register (TLI_LxLUT) (x = 0,1)

Address offset: 0xC4+0x80 * x

Reset value: 0x0000 0000

This register has to be accessed by word (32-bit).

31	30	29	28	27	26	25	24	23	22	21	20	19	18	17	16
TADD [7:0]								TR[7:0]							
w								w							

15	14	13	12	11	10	9	8	7	6	5	4	3	2	1	0
TG[7:0]								TB[7:0]							
w								w							

Bits	Fields	Descriptions
31:24	TADD[7:0]	Look up table write address The entry at this address in LUT will be updated with the value of red, green and bule written

23:16	TR[7:0]	Red channel of a LUT entry
15:8	TG[7:0]	Green channel of a LUT entry
7:0	TB[7:0]	Blue channel of a LUT entry

33. Receiver of Sony/Philips Digtial Interface (RSPDIF)

33.1. Overview

The receiver of Sony/Philips Digital Interface (RSPDIF) module provides the function of receiving and decoding RSPDIF audio data streams.

33.2. Characteristics

- Supports audio IEC-60958 and IEC-61937.
- Up to 4 inputs available.
- Supports receiving double buffer.
- Dual clock domain：PCLK for register interface and RSPDIF_CK for other parts.
- Supports maximum symbol rate: 12.288 MHz.
- Supports stereo stream from 8 to 192 kHz.
- Supports automatic symbol rate detection.
- Genrate symbol clock.
- Check the parity bit of the received data.
- Support multiple data processing methods, which can process audio data and user channel information separately or together.
- Supports using DMA communication to receive audio data and user channel information respectively.
- Supports interrupt fuction.

33.3. Function overview

33.3.1. RSPDIF block diagram

The receiver of Sony/Philips Digital Interface (RSPDIF) module provides the function of receiving and decoding SPDIF audio data streams.The audio data, channel status (CS) and User data (U) received can be accessed by DMA interface. The RSPDIF transceiver allows the handling of both RSPDIF channel status (CS) and User data (U) and supports the precise measurement of an incoming sampling frequency.

Figure 33-1. RSPDIF block diagram

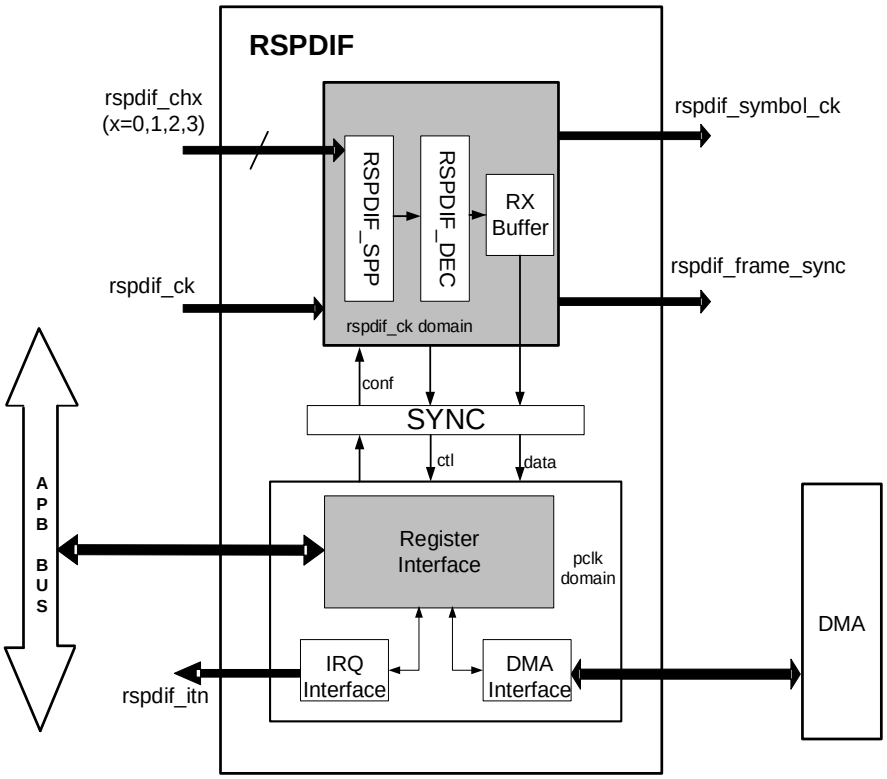

Legend:

rspdif_frame_sync: RSPDIF frame rate synchronization signal

rspdif_symbol_ck: RSPDIF channel symbol clock

The RSPDIF module is responsible for decoding the S/PDIF stream received from RSPDIF_CH[3:0], and is used to receive S/PD audio data in accordance with the IEC-60958 and IEC-61937 standards. These standards support simple stereo streams at high sampling rates, as well as compressed multi-channel surround sound.

RSPDIF resamples the incoming signal, decodes the Manchester stream, recognizes subframes, frames, and block elements, and passes the decoded data and associated status flags to the RSPDIF register. The RSPDIF section can be fully controlled through the APB bus, and provides a dedicated path for user information and channel information. It can handle two DMA channels, audio sample and channel/user information. Interrupt service can also be used as an alternative to DMA for sending error signals or critical states.

When RSPDIF decodes the incoming audio data stream, it also provides two signals:

- rspdif_frame_sync: The frequency of this signal is equal to the frame rate, and it is inverted every time the subframe preamble is detected by RSPDIF, and the duty cycle is 50%.
- rspdif_symbol_ck: The signal frequency is equal to the symbol rate. The signal can drive internal components in the system, such as SAI ports, and external components, such

as A/Ds or D/As, with clocking control provided via related registers. Please refer to ***RSPDIF clock management*** for specific generation conditions.

33.3.2. S/PDIF protocol

S/PDIF (Sony/Philips Digital Interface) is a type of digital audio interconnect used in consumer audio equipment to output audio over reasonably short distances. The signal is transmitted over either a coaxial cable with RCA connectors or a fiber optic cable with TOSLINK connectors. S/PDIF interconnects components in home theaters and other digital high-fidelity systems.

S/PDIF is a data link layer protocol as well as a set of physical layer specifications for carrying digital audio signals between devices and components over either optical or electrical cable. The name stands for Sony/Philips Digital Interconnect Format but is also known as Sony/Philips Digital Interface. Sony and Philips were the primary designers of S/PDIF. S/PDIF is standardized in IEC 60958.

S/PDIF block

A S/PDIF block consists of 192 frames and each frame contains two sub-frames(one for left channel and the other one for right channel), that is, a RSPDIF block contains 384 sub-frames. Each sub-frame contains 32 bits. The data format of the block and the sub-frame is shown in ***Table 33-1. Sub-frame pattern*** and ***Figure 33-2. S/PDIF block and S/PDIF sub-frame format.***

Table 33-1. Sub-frame pattern

BITS	Description
0~3	synchronization preambles, three types: B, M, W. Preambe M represents channel A (left channel) or main is transmitted at this time, preamble W represents channel B (right channel) is transmitted at this time, and preamble B is more special, which represents channel A (left channel) is transmitted at this time, and it is the starting subframe of A block.
4~27	the audio sample word in linear 2's complement representation. The most significant bit (MSB) is always carried by bit 27. When a 20-bit coding range is used, bits 8 to 27 carry the audio sample word with the LSB in bit 8.
28	validity bit “V”, indicates if the data is valid
29	user data bit “U”, defined by user
30	channel status bit “C”
31	parity bit “P”, carries a parity bit such that bits 4 to 31 inclusive carry an even number of ones and an even number of zeroes (even parity).

Figure 33-2. S/PDIF block and S/PDIF sub-frame format

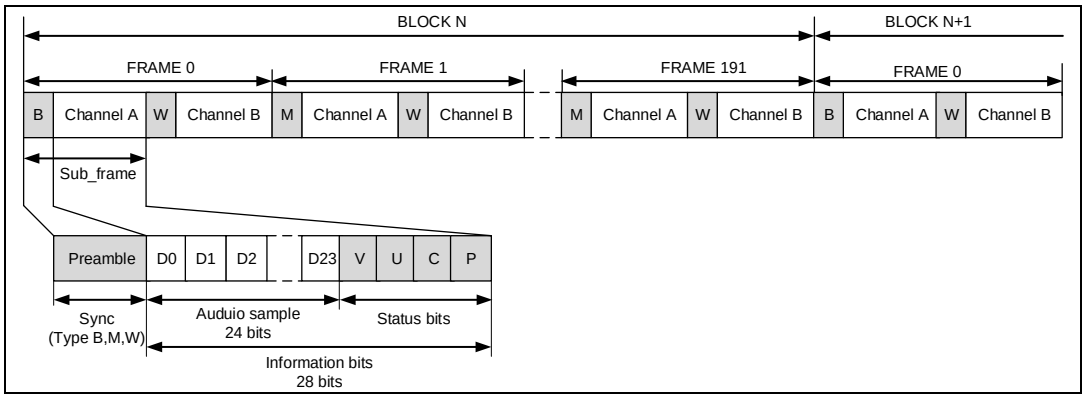

Coding of information bit

When IEC60958 transmits data, bits 4 to 31 are encoded in biphase-mark(Manchester protocol). The principle is to use a clock frequency that is twice the transmission bit rate as a reference, split the original one bit of data into two, and each bit to be transmitted is represented by a symbol containing two consecutive binary states. When the data is 1, in the clock cycle shift a potential (0->1 or 1->0) data into two different potentials, into 10 or 01, When the data is 0, it doesn't switch, it goes to 11 or 00. These binary states are named “UI” (Unit Interval) in the IEC-60958 specification.

Note: A symbol represents a data bit which comprises two unit intervals. The symbols rate means the frequency of bit clock shown in ***Figure 33-3. Information bits coding example.*** The clock frequecny used by RSPDIF module is twice of that of bit clock.

Figure 33-3. Information bits coding example

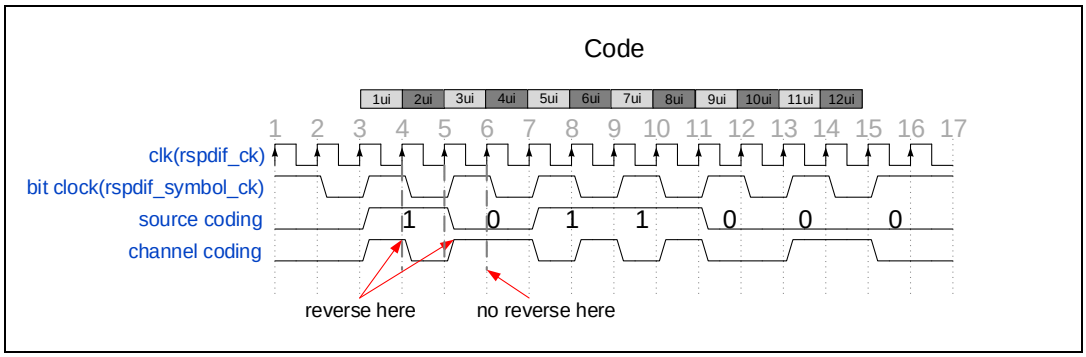

Synchronization preambles

Whether or not to invert the preamble pattern is determined by the value of the previous half-bit value. For the first "B" preamble of the first frame, this first half-bit value is the line level before transmission is enabled. For other preambles, this first half-bit value is the second half of the parity bit of the previous sub-frame. The preambles patterns B, M and W are shown in the ***Figure 33-4. S/PDIF Preambles.*** The preamble pattern can be concluded in ***Table 33-2. Preamble pattern***.

Figure 33-4. S/PDIF Preambles

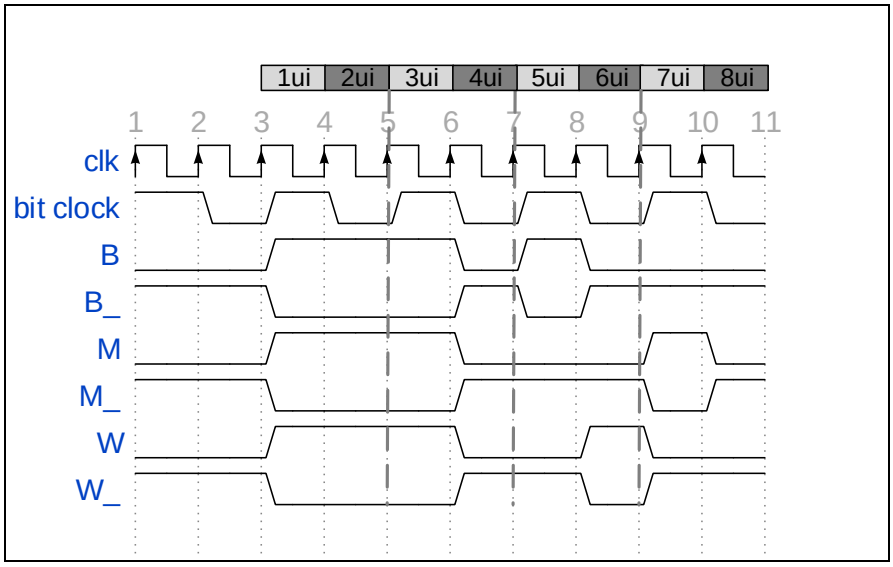

Note: When coding data, transition should occur at the end of second UI. However, transition may lack in preamble at the end of second UI.

Table 33-2. Preamble pattern

Preceding state (the previous half-bit value)	0	1	Description
Preamble	**Channel coding**		
B	11101000	00010111	Channel A data at the start of block
W	11100100	00011011	Channel B data at somewhere in the block
M	11100010	00011101	Channel A data

33.3.3. RSPDIF

RSPDIF mainly includes two parts: RSPDIF_SPP and RSPDIF_DEC. The S/PDIF stream is decoded based on measuring the time interval between two consecutive edges. There are three kinds of time intervals in the S/PDIF stream, shown as ***Table 33-3. RSPDIF time interval***.

Table 33-3. RSPDIF time interval

Time interval	Description
TL	long time interval, having a duration of 3 x UI. It appears only during preambles.
TM	medium time interval, having a duration of 2 x UI. It appears both in some preambles or the information field.
TS	short time interval, having a duration of 1 x UI. It appears both in some preambles or the information field.

RSPDIF_SPP

RSPDIF_SPP signal preprocessing module is designed to perform noise filtering and rising/falling edge detection.

RSPDIF supports a total of four input signals, select the required input by configuring the RXCHSEL[2:0] bits in RSPDIF_CTL register. The S/PDIF signal received on the selected RSPDIF_CH is re-sampled using the rspdif_ck clock (acquisition clock). A simple filtering is applied in order to eliminate glitches.

This is performed by the stage detecting the edge transitions. During edge conversion detection, when the sequence 0 is followed by two 1s, the rising edge is detected. When the sequence 1 is followed by two 0s, the falling edge is detected. After the rising edge, a sequence of falling edges is expected. After the falling edge, a sequence of rising edges is expected.

Figure 33-5. Noise filtering and rising/falling edge detection

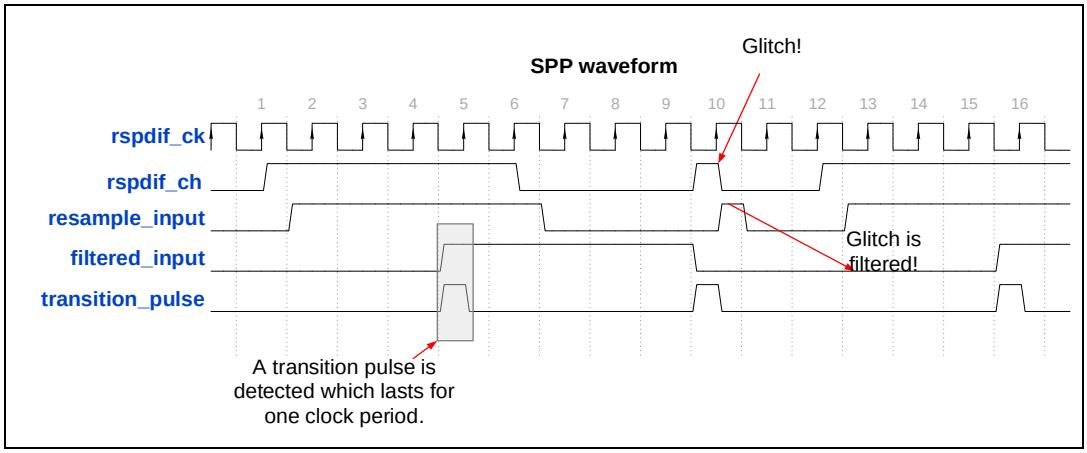

Note: The transition_pulse is an important indictor for the RSPDIF_DEC module to judge the transition types and decode the input bit stream proprly.

RSPDIF_DEC

RSPDIF_DEC detects preamble type and decodes information bits. RSPDIF_DEC will pack these data and write into the RX buffer or into RSPDIFCHSTAT register. The R SPDIF_DEC module can perform functions such as time interval estimation, symbol ra te and synchronization estimation, block and subframe header detection, data decodin g and continuous symbol rate tracking.

TWCNT

The TWCNT counter is used to measure the time interval duration. It is clocked by the rspdif_ck signal. On every transition pulse, the counter value is stored and the counter is reset to start counting again. If the time interval between the two transitions is too long and the TWCNT overflows, RSPDIF will stop working and the TMOUTERR flag of the RSPDIF_STAT register is set at this time.

The transition timer is like a watchdog timer, which generates a trigger after 70 conversions of the incoming signal, and stops searching for the longest and shortest conversions. Note that calculating 70 transitions ensures a delay that is a little longer than a subframe.

Figure 33-6. Waveforms of TWCNT

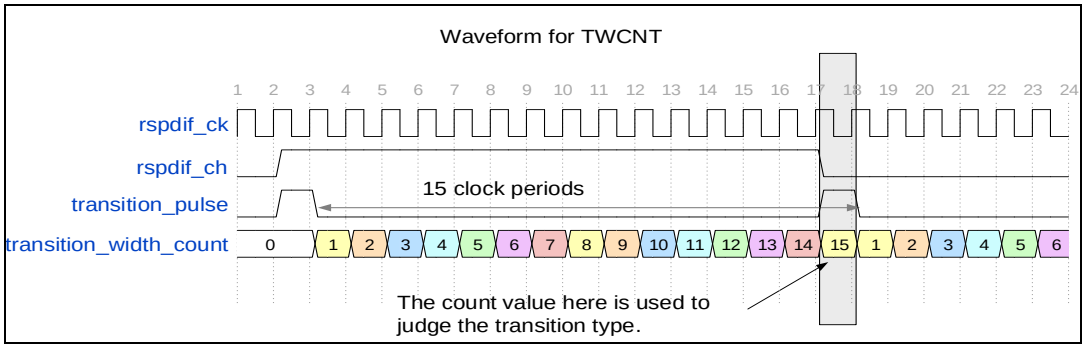

Note: The counter value stored is equal to the actual clock periods between the two transition pulses. For example, as shown in ***Figure 33-6. Waveforms of TWCNT***, the time interval duaration between the two transition pulses is 15 RSPDIF_CK clock periods, so the number stored is 15(not 14!). In this way, it is convient to calculate CKCNT5, WIDTH24 and WIDTH40. When the counter value is reset, the reset value is (NOT 0!).

SYNC

RSPDIF_DEC provides a SYNC module, please refer to ***RSPDIF synchronization process***. SYNC module calculates WIDTH24 and WIDTH40 which are references for calculating the thresholds for judging the transition type. WIDTH24 and WIDTH40 represent the time interval duaration of consective 24 symbols and 40 symbols respectively. As introduced above, it is clear that:

$$\text{WIDTH24} = 48\ \text{UI} \rightarrow \text{TL}_{\text{LO}} = 1.5\ \text{UI} = \frac{\text{WIDTH24}}{32} \qquad (33\text{-}1)$$

$$\text{WIDTH40} = 80\ \text{UI} \rightarrow \text{TH}_{\text{HI}} = 2.5\ \text{UI} = \frac{\text{WIDTH40}}{32} \qquad (33\text{-}2)$$

TH_{HO} and TL_{LO} is threshold values which are used for judging the transition types and this part shall be introduced in the description of DECODER module and RSPDIF synchronization process in detail. WIDTH24 and WIDTH40 can also be used for generating the symbol clock and this will be introduced ***RSPDIF clock management***.

Additionally, CKCNT5 in RSPDIF_STAT register which is used to estimate the S/PDIF symbol rate is also calculated in SYNC.

DECODER

RSPDIF_DEC provides a DECODER module which has the function of transition coder and preamble detector. It outputs the preamble type (PREF), 28 bit information bits and status bits (C,U,V,P). A recovered symbol clock is also generated during the decoder process of the RSPDIF_CH bit stream. Decoder block receives the current transition width from the TWCNT

counter. This block encodes the current transition width by comparing the current transition width with two different thresholds, names TH_{HI} and TH_{LO}, as shown in ***Table 33-4. Transition encoder encoding rules***.

Table 33-4. Transition encoder encoding rules

transition width (TH)	Code	Description
TH < (TH_{LO} – 1)	TS	the data received is half part of data bit '1'
(TH_{LO} – 1)< TH <TH_{HI}	TM	the data received is data bit '0'
TH > TH_{HI}	TL	the data received is the long pulse of preambles
else	-	FRERR flag is set

The calculation methods of THHI and THLO, refer to ***Table 33-5. Thresholds calculation***.

Table 33-5. Thresholds calculation

Thresholds	Synchronization
TH_{LO}	WIDTH24 / 32
TH_{HI}	WIDTH40 / 32

RSPDIF synchronization refer to ***Figure 33-7. Synchronization flowchart flow*** for additional information.

Preamble detector

The decoder provides the function of preamble detection, checking four consecutive conversions of a specific sequence to ensure whether they constitute the preamble part. Assume that TRANS0, TRANS1, TRANS2, and TRANS3 represent the four consecutive transformations of the above encoding. The four converted values are shown in ***Table 33-6. Preamble transition sequence***. The absence of this mode indicates that these conversions do not constitute a header, but rather constitute part of the subframe data and can be decoded by a bi-phase decoder.

Table 33-6. Preamble transition sequence

Preamble type	Biphase data pattern	TRANS3	TRANS2	TRANS1	TRANS0
B	11101000	TL	TS	TS	TL
M	11100010	TL	TL	TS	TS
W	11100100	TL	TM	TS	TM

Bi-phase decoder

The Bi-phase decoder uses the conversion information provided by the conversion encoder and the preamble detector to decode the input bi-phase symbol data stream. When the header has been correctly detected, the Bi-phase decoder will decode the following data information, as shown in ***Table 33-7. Bi-phase decoding rules***.

Table 33-7. Bi-phase decoding rules

Input	Decode value
TM	0
Two consecutive TS	1

Input	Decode value
else	FRERR flag is set

33.3.4. RSPDIF synchronization process

When the RXCFG[1:0] in RSPDIF_CTL register is set to 2'b01 or 2'b11, the synchronization process starts. If the WFRXA bit in RSPDIF_CTL register is set to 1, RSPDIF will first detect the activity of the selected RSPDIF_CH line before the synchronization. Only when four transitions are detected on the selected RSPDIF_CH line, RSPDIF will switch to the synchronization phase. This function can avoid synchronization errors effectively. The synchronization process is shown in ***Figure 33-7. Synchronization flowchart flow***. This function is implemented in the RSPDIF_DEC module.

After the synchronization is correctly decoded by RSPDIF, the accurate synchronization threshold is calculated. When RSPDIF can correctly measure the duration of 24 and 40 consecutive symbols, the synchronization is completed, the threshold will be updated, and the SYNDO flag is set to 1.

There may be interference on the RSPDIF_CH line, and it may happen that the synchronization process is not performed correctly. RSPDIF provides a function to set the number of synchronization retries (MAXRT) before synchronization. Until the times set by MAXRT bit are reached, the synchronization has not been performed correctly, and the SYNERR error flag is set. If there is no valid RSPDIF data stream on the RSPDIF_CH line, TWCNT overflows and the TMOUTERR error flag is set.

After synchronization is completed, when the next header "B" is detected, RSPDIF starts to receive channel status (C) and user data (U) (see ***Figure 33-8. Synchronization process scheduling***). The user reads the C and U bits through the RSPDIF_CHSTAT register, and configures the RXDF[1:0] and RXSTEOMEN bits according to the C and U bits.

Note: When RXCFG[1:0] = 2'b11, the modification of RXDF[1:0] and RXSTEOMEN bits is invalid. Refer to ***RSPDIF_CTL register access permissions in different states.***

Figure 33-7. Synchronization flowchart flow

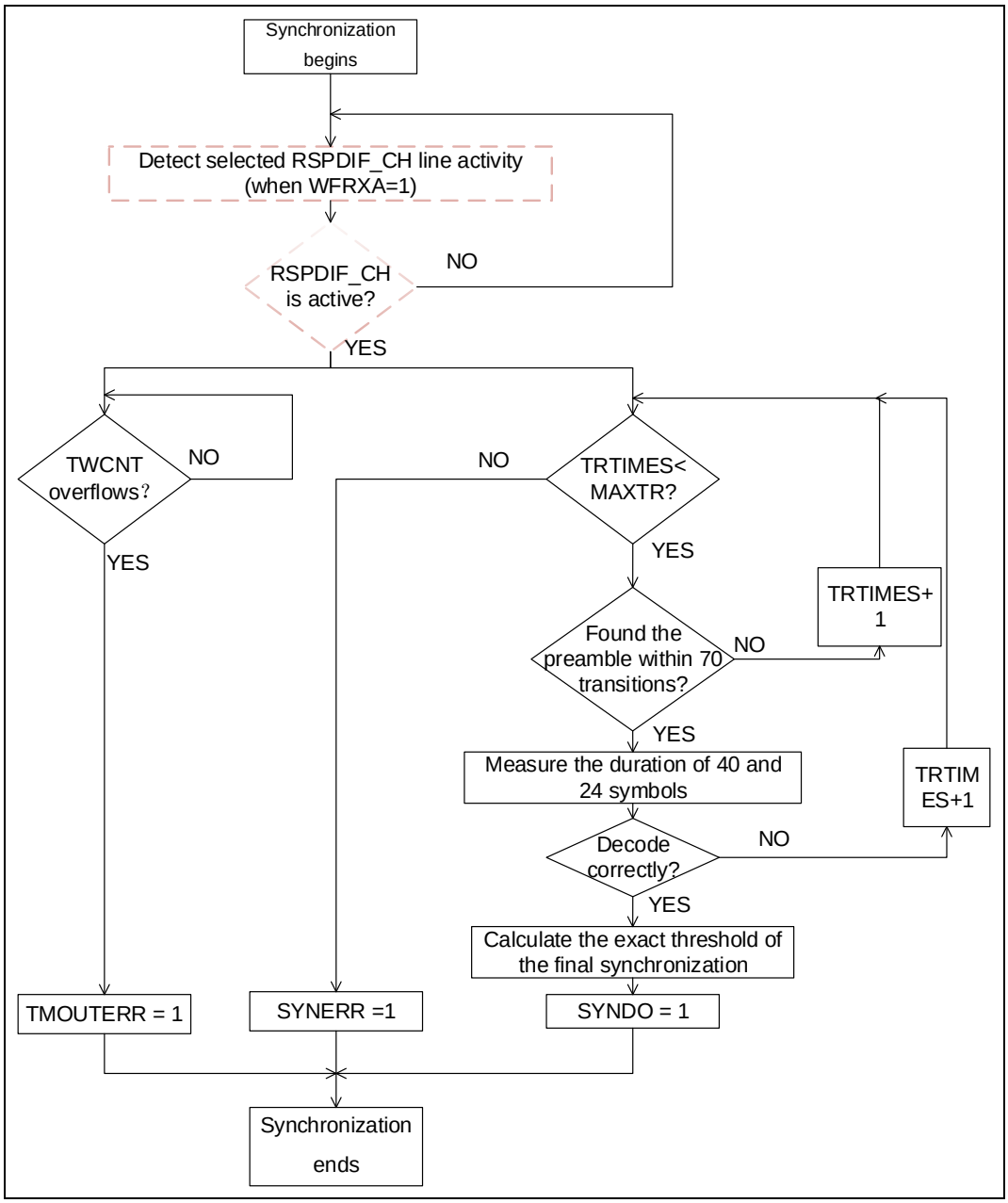

Figure 33-8. Synchronization process scheduling

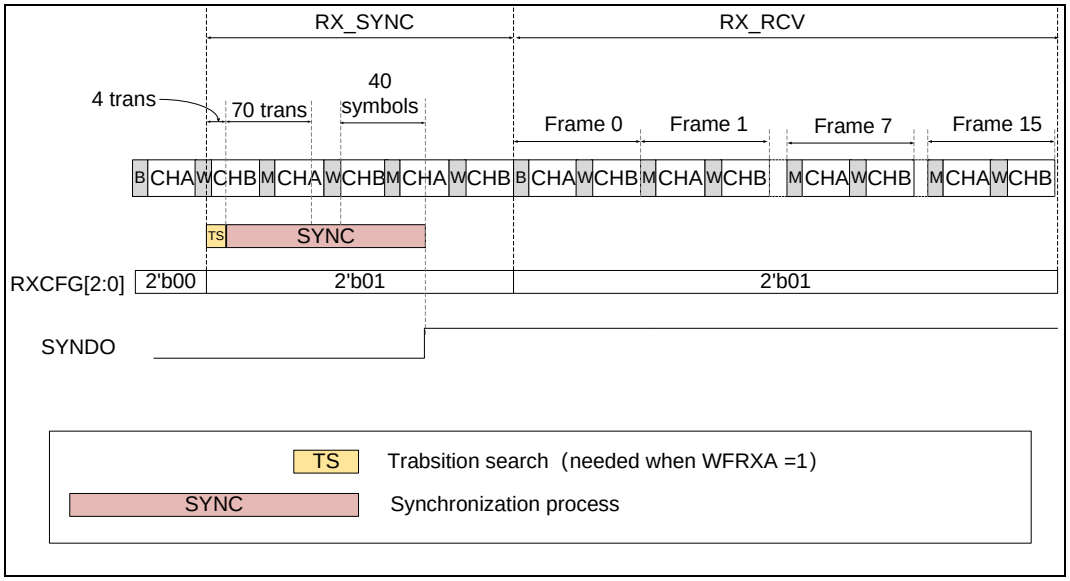

33.3.5. RSPDIF state machine

The RSPDIF state machine includes the following states, as shown in ***Table 33-8. RSPDIF state***.

Table 33-8. RSPDIF state

RSPDIF state	Description
RX_IDLE	In idle state, RSPDIF is disabled, rspdif_ckdomain is reset, and rspdif_pclk domain function is normal.
RX_SYNC	In synchronization status, RSPDIF is synchronized with the data stream, the threshold is updated regularly, and the user data and channel status can be obtained through interrupt or DMA.
RX_RCV	In receiving status: RSPDIF is synchronized with the data stream, and the threshold is updated regularly. Users, channel status and audio data can be obtained through interrupts or DMA. When RXCFG[1:0] turns to 2'b11, RSPDIF waits for the "B" preamble before starting to save audio data.
RX_STOP	In stop status: RSPDIF is no longer synchronized, user and channel status and audio data reception stop.

The ***Figure 33-9. RSPDIF states*** shows how to switch between RSPDIF states.

Figure 33-9. RSPDIF states

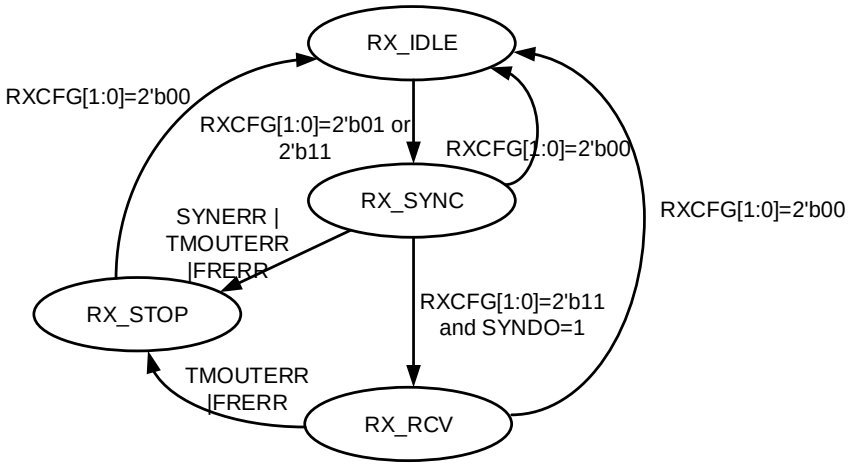

RX_IDLE

The state machine will enter the RX_IDLE state from the following conditions:

- Set RXCFG[1:0] to 2'b00.
- When in RX_SYNCstate, set RXCFG[1:0] to 2'b00.
- When in RX_RCV state, set RXCFG[1:0] to 2'b00.
- When in RX_STOP state, set RXCFG[1:0] to 2'b00.

The next state of RX_IDLE is:

- RX_SYNC: Set RXCFG[1:0] to 2'b01 or 2'b11.

Note: The software can set RXCFG[1:0] to 0 at any time, and RSPDIF immediately returns to the RX_IDLE state. If the DMA transfer is in progress, it will wait for the DMA transfer completed.

RX_SYNC

The state machine will enter the RX_SYNC state from the following conditions:

- When in RX_IDLE state, set RXCFG[1:0] to 2'b01 or 2'b11.

The next state of RX_SYNC is:

- RX_IDLE : Set RXCFG[1:0] to 2'b00.
- RX_RCV : Set RXCFG[1:0] to 2'b11 and synchronization is completed successfully (SYNDO = 1).
- RX_STOP : Synchronization fails (If the number of synchronization retries has been set, the maximum value has been reached) or the received data has not been decoded correctly (FRERR or SYNERR or TMOUTERR = 1).

Note: When the synchronization is completed, if RXCFG[1:0] = 01, the RSPDIF is still in this state.

RX_RCV

The state machine will enter the RX_RCV state from the following conditions:

- When in RX_SYNC state, s et RXCFG[1:0] to 2'b11 and synchronization is completed successfully (SYNDO = 1).

The next state of RX_RCV is:

- RX_IDLE : Set RXCFG[1:0] to 2'b00.
- RX_STOP：The received data has not been decoded correctly (FRERR or TMOUTERR = 1).

RX_STOP

The state machine will enter the RX_STOP state from the following conditions:

- When in RX_SYNC state, synchronization fails (If the number of synchronization retries has been set, the maximum value has been reached) or the received data has not been decoded correctly (FRERR or SYNERR or TMOUTERR = 1).
- When in RX_RCVstate, the received data has not been decoded correctly (FRERR or TMOUTERR = 1).

The next state of RX_STOP is:

- RX_IDLE：Set RXCFG[1:0] to 2'b00.

Note: When RXCFG[1:0] is set to 0, the RSPDIF is disabled, meaning that all the state machines are reset, and RX BUFFER is flushed, as well that flags FRERR, SYNERR and TMOUTERR are reset.

RSPDIF_CTL register access permissions in different states

In the different state stages of the RSPDIF state machine, the access rights to different bit fields of the RSPDIF_CTL register are different. Please refer to ***Table 33-9. RSPDIF_CTL register access permissions in different states*** for details. SPDIF_CTL bit access characteristics in different RSPDIF states. The hardware handles this way to avoid incorrect configuration of the RSPDIF_CTL register. Please note that even user can modify the PTNCPEN, CUNCPEN, VNCPEN and PNCPEN bits in any state of RSPDIF, but these modifications will not affect the value already saved in the DATA register.

Table 33-9. RSPDIF_CTL register access permissions in different states

RSPDIF state	RXCHSEL[2:0]	WFRXA	MAXRT[1:0]	CFCHSEL	DMACBEN	PTNCPEN	CUNCPEN	VNCPEN	PNCPEN	RXDF[1:0]	RXSTEOMEN	DMAREN
RX_IDLE (RXCFG[1:0] = 2'b00)	rw	rw	rw	rw	rw	rw	rw	rw	rw	rw	rw	rw

RSPDIF state	RXCHSEL[2:0]	WFRXA	MAXRT[1:0]	CFCHSEL	DMACBEN	PTNCPEN	CUNCPEN	VNCPEN	PNCPEN	RXDF[1:0]	RXSTEOMEN	DMAREN
RX_SYNC (RXCFG[1:0] = 2'b01)	r	r	r	r	rw	rw	rw	rw	rw	rw	rw	rw
RX_RCV (RXCFG[1:0] = 2'b11)	r	r	r	r	rw	rw	rw	rw	rw	r	r	rw

33.3.6. RSPDIF data reception management

RSPDIF double data buffer

RSPDIF implements the double buffering function when data is received. The receiving data double buffer is composed of a 32-bit RX buffer and RSPDIF_DATA register. When the RSPDIF_DATA register is empty and the conversion between the parity bit (P) and the next preamble has been detected, the data in the RX buffer will be immediately transferred to the RSPDIF_DATA register.

The double buffer mechanism of data improves the tolerance of delay. The maximum delay allowed is T_{SAMPLE} - $2T_{pclk}$ - $2T_{rspdif_ck}$ (T_{SAMPLE} is the audio sampling rate of the received stereo audio samples, T_{PCLK} is the period of the rspdif_pclk clock, and T_{rspdif_ck} is the period of rspdif_ck clock.).

The software can obtain the received data by reading the RSPDIF_DATA register or DMA. Recommended DMA operation, please refer to ***DMA function*** for details.

RSPDIF_DATA register

Except for V, U, C, P status bits and headers, each subframe includes up to 24 bits of data. The RSPDIF_DATA register has three formats according to the value of RXDF[1:0] in the RSPDIF_CTL register, and there are three processing methods for the received audio data stream:

- When RXDF[1:0] = 2'b00, the format of the data register is the format described by RSPDIF_DATA_F0, and the data is forced to be right-aligned. The PREF\C\U\V\P bit can be enabled or forced to 0 as required.
- When RXDF[1:0] =2'b01, the format of the data register is the format described by RSPDIF_DATA_F1, and the data is forced to be left-aligned. The PREF\C\U\V\P bit can be enabled or forced to 0 as required.
- When RXDF[1:0] = 2'b11, the format of the data register is the format described by RSPDIF_DATA_F2. This format uses only 16 bits per subframe in non-linear mode. The data of two consecutive sub-frames will be stored in a RSPDIF_DATA register. The format PREF\C\U\V\P bits and data bits cannot be mixed, but the software can still be

obtained by reading the RSPDIF_CHSTAT register or a dedicated DMA channel. When RXSTEOMEN = 1, there is no risk of misalignment (that is, the data from channel A is always stored in RSPDIF_DATA[31:16]). If RXSTEOMEN = 0, there is a risk of misalignment in case of excess. In this case, RSPDIF_DATA[31:16] always contains the oldest value, and RSPDIF_DATA[15:0] always contains the most recent value (*Figure 33-10. RSPDIF_DATA register format*.).

Note: This document describes three data registers: RSPDIF_DATA_Fx (x = 0,1,2), but there is actually only one physical data register.

Figure 33-10. RSPDIF_DATA register format

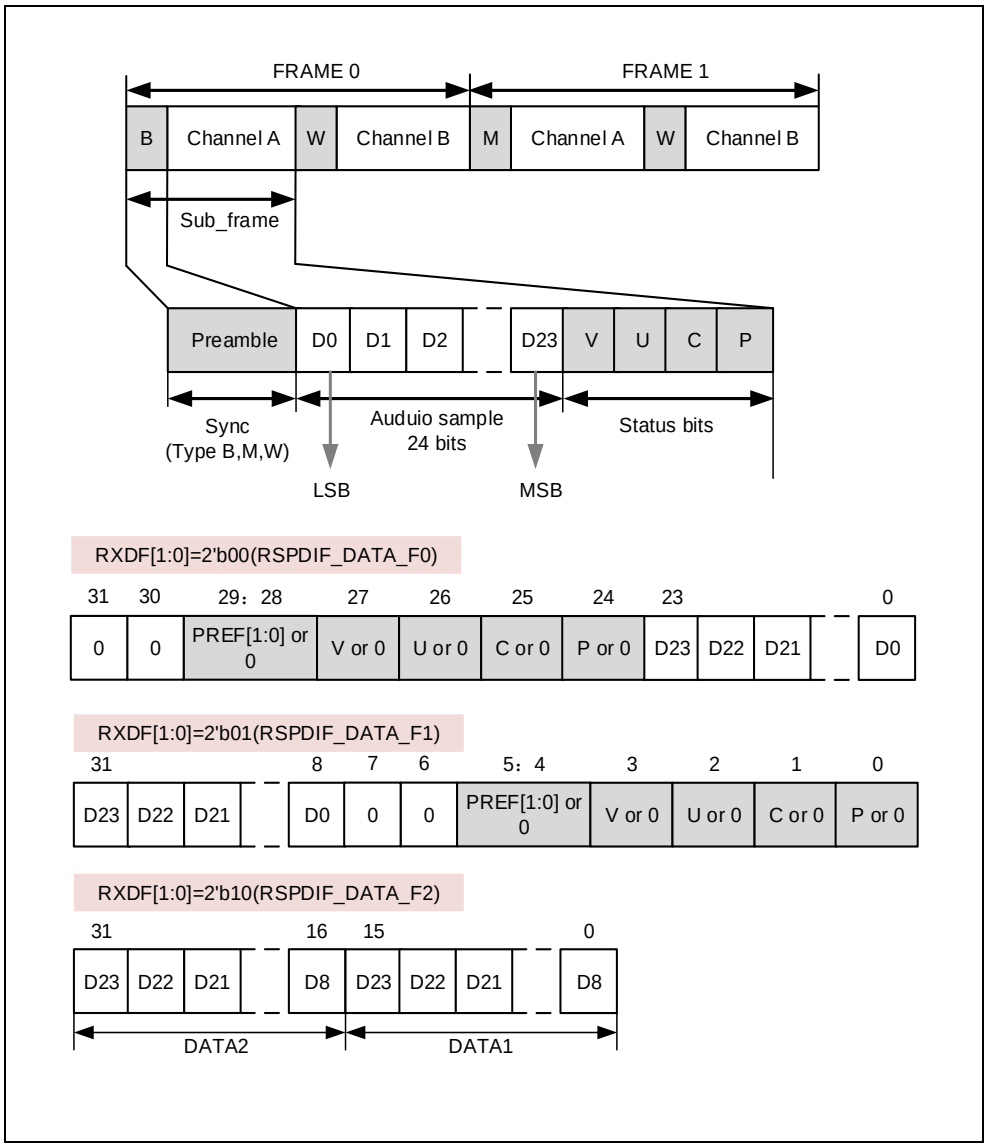

Dedicated control flow

The RSPDIF provides a dedicated channel for receiving user data U and channel status C. By configuring the CFCHSEL bit in the RSPDIF_CTL register, user can select to obtain the channel status bit C from channel A or channel B. When RXCFG[1:0] is set to 2'b01 or 2'b11,

the acquisition will start after the synchronization phase ends. When 8 channel status bits and 16 user data bits are received, pack them and store them in the RSPDIF_CHSTAT register. If the DMACBEN bit of the RSPDIF_CTL register is configured as 1, and the DMA function of the control flow is enabled, a DMA request is triggered. If CHS[0] is the first status bit of the new block, the SOB bit is set to 1. Please refer to ***RX Channel status register (RSPDIF_CHSTAT)***.

Figure 33-11. Channel/user data format

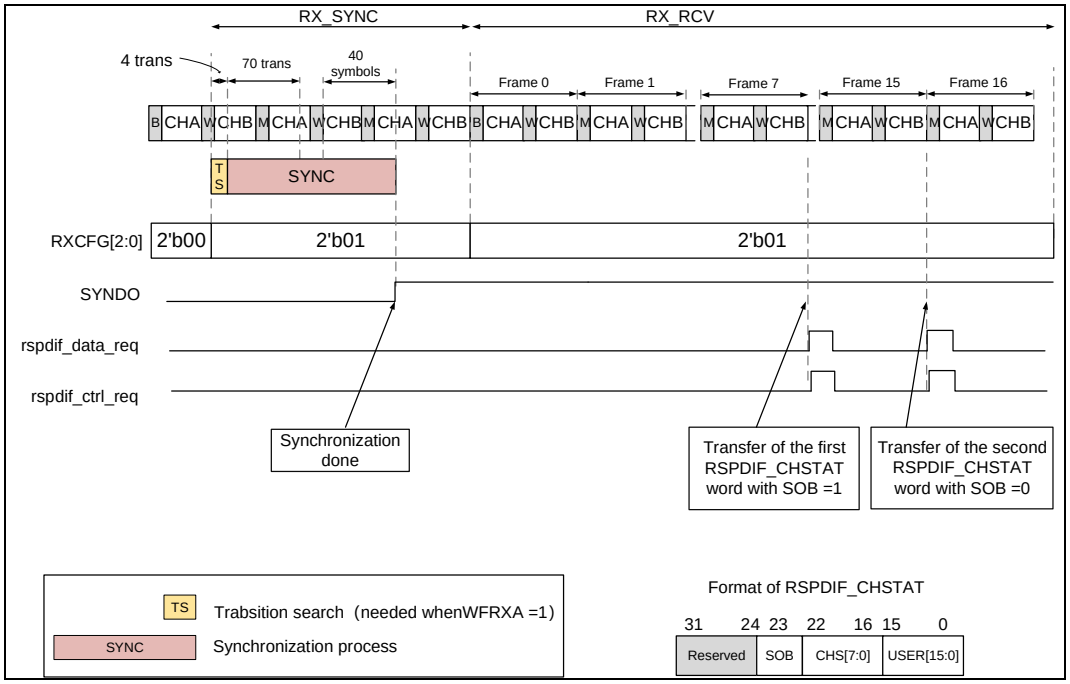

Mixing data and control flow

When RXDF[1:0] = 2'b00 or 2'b01, the RSPDIF_DATA register format is RSPDIF_DATA_F0 or RSPDIF_DATA_F1, which allows the V, U, C, P status bits, preamble and data mixed reception management. By configuring the RSPDIF_CTL register, the user can choose which contents of the V, U, C, P status bits, and preamble are stored in the RSPDIF_DATA register flexibly, as shown in ***Table 33-10. Mixing data and control flow***.

Table 33-10. Mixing data and control flow

BIT	value	Description
PNCPEN	1	Parity error information is masked
	0	Parity error information is copied into RSPDIF_DATA
VNCPEN	1	Validity information is masked
	0	Validity information is copied into RSPDIF_DATA
CUNCPEN	1	Channel status, and user data information are masked
	0	Channel status, and user data information are copied into RSPDIF_DATA
PTNCPEN	1	Preamble type is masked

BIT	value	Description
	0	Preamble type is copied into RSPDIF_DATA

33.3.7. RSPDIF clock management

From the RSPDIF block diagram shown in *Figure 33-1. RSPDIF block diagram*, the RSPDIF block needs the rspdif_pclk clock for the registers interface and the rspdif_ck clock for the RSPDIF DEC module. rspdif_ck should not be phase locked. In the SYNC block, all signals passing through these clock domains are resynchronized.

In order to decode the incoming S/PDIF stream correctly, the decoding clock rspdif_ck should be at least 11 times higher than the maximum symbol rate or 704 times higher than the audio sampling rate to resample the received data. For example, if the audio rate is 192KHz, and the symbol rate is 12.88MHz (audio rate * number of channels * number of sub-frames), at least 135.2MHz decoding clock (symbol rate * 11) is required. For rspdif_pclk, rspdif_pclk cannot be less than the symbol rate.

Table 33-11. Minimum rspdif_ck frequency and audio sampling rate

Symbol Rate	Minimum rspdif_ck frequency	Audio
3.072 MHz	33.8 MHz	For 48 kHz stream
6.144 MHz	67.6 MHz	For 96 kHz stream
12.288 MHz	135.2 MHz	For 192 kHz stream

In RSPDIF module,

RSPDIF_DEC: RSPDIF_DEC is designed to decode the input RSPDIF bits stream. When RSPDIF is not enable, the clock of RSPDIF_DEC module is gated. The source clock of this module is rspdif_clk.

RSPDIF symbol clock

When RSPDIF is decoding input audio stream, a symbol clock rspdif_symbol_ck is constructed using WIDTH24, WIDTH40 and the value of the symbol boundary. It can be used as a reference core clock for other audio devices (such as SAI or I2S), and can be used for the RSPDIF to I2S bridging function.

When receiving the subframe synchronization preamble, the falling and rising edges of the symbol clock are constructed from the WIDTH24 and WIDTH40 values. When RSPDIF is RX_STOP or RX_IDLE, WIDTH24 and WIDTH40 can also be used to generate the symbol clock. When receiving a subframe, RSPDIF uses symbol boundaries to generate rising edges, use WIDTH24 and WIDTH40 generate falling edges, and the symbol clock's duty cycle is close to 50%.

However, when RSPDIF switches from using WIDTH24 and WIDTH40 to generate a symbol clock to generating a symbol clock from a symbol boundary, the symbol clock duty cycle can be changed, and vice versa. When the symbol clock generation mode is switched or when the S/PDIF signal is re-sampled using the rspdif_ck clock, the symbol clock may be greatly

jittered.

Configure the SCKEN bit in the RSPDIF_CTL register to enable or disable the generation of the symbol clock. Configure the BKSCKEN bit in the RSPDIF_CTL register to enable or disable the generation of the backup symbol clock. However, when the flag SYNERR is set to '1', neither the symbol clock nor the backup clock can be generated, since there is no synchronization. When both SCKEN and BKSCKEN are set to '1', the symbol clock will loose some transitions when the RSPDIF switches from RX_SYNC or RX_RCV to RX_STOP, or RX_IDLE.

For the specific generation conditions of the symbol clock, please refer to ***Table 33-12. Conditions of RSPDIF_symbol_ck generation***.

Table 33-12. Conditions of RSPDIF_symbol_ck generation

RSPDIF	SCKEN	BKSCKEN	valid data are received via the selected RSPDIF CH	valid values for WIDTH40 and WIDTH24	WIDTH40 and WIDTH24 contain the valid values from the previous synchronization	no transitions detected on the selected RSPDIF input	complete the Synchronization (SYNDO = '1')	RSPDIF_symb_ck state
Any state	0	x	x	x	x	x	x	Disable
RX_IDLE	1	0	x	x	x	x	1	No output
		1	x	0	x	x	x	
	1	1	x	1	x	x	x	output
RX_SYNC	1	0	x	x	x	x	0	No output
		1	x	0	x	x	0	
	1	0	x	x	x	x	1	output
		1	x	x	x	x	1	
			x	x	1	x	0	
STATE_REV	1	0	x	x	x	1	x	No output
		1	x	x	x	1	x	
	1	0	1	x	x	x	x	output
		1	1	x	x	x	x	
RX_STOP	1	0	x	x	x	x	x	No output
		1	x	0	x	x	x	
	1	1	x	1	x	x	x	output

Note: "0" means that the condition must not be met; "1" means that the condition must be met; "x" means that the condition has no effect on the generation of the symbol clock.

33.3.8. DMA function

RSPDIF can obtain data and control information through the corresponding dedicated DMA channel.. Please refer to the ***Direct memory access controller (DMA)*** for specific channels

used. Set the DMAREN bit in the RSPDIF_CTL register can enable the RSPDIF block data DMA transfer function. When RSPDIF_DATA is not empty, a data transfer request will be sent to the DMA, and the DMA will read the data directly. Set the DMACBEN bit in the RSPDIF_CTL register can enable the RSPDIF block DMA function of channel and user information. For DMA usage of control data, please refer to ***Table 33-9. RSPDIF_CTL register access permissions in different states***.

It is not recommended to configure the DMAREN or DMACBEN bit to enable DMA transfer after beginning data reception.

33.3.9. Status、error and interrupt

Status flags

Reception events for data flow (RBNE)

When the RX buffer is not empty, the RBNE bit is set. Indicates that a data is received and when the RSPDIF_DATA register is empty and the conversion between the parity bit (P) and the next preamble has been detected, the data in the RX buffer will be immediately transferred to the RSPDIF_DATA register. The software can obtain this data by reading RSPDIF_DATA register.

Reception event for control flow (CBNE)

When the RSPDIF_CHSTAT is not empty, the CBNE bit is set. Indicates that the control data is received and stored in the RSPDIF_CHSTAT at this time. The software can obtain this data by reading RSPDIF_CHSTAT.

Synchronization done (SYNDO)

When RSPDIF can measure the duration of 24 and 40 consecutive symbols correctly and SYNC is completed, this bit is set. Indicates that the synchronization is completed.

Start of new block interrupt (SYNDB)

When preamble B has been detected, this bit is set. Represented as the beginning of a block.

Note: SYNDB event can only occur when RSPDIF is synchronized to the input stream (SYNDO = 1).

Error flags

Frame error (FERR)

When the conversion sequence is incorrect in the 28 information bits or the preamble appears in an unexpected position or the expected preamble is not received, RSPDIF frame error

occurs and the FRERR bit is set. If the RXDCERRIE bit of the RSPDIF_INTEN register is set, a corresponding interrupt will be generated. Set RXCFG[1:0] to 2'b00 to clear the error flag.

Synchronization error (SYNERR)

When the synchronization fails (if the maximum retries MAXTR is set, MAXTR has been exceeded), RSPDIF synchronization error occurs, and the SYNERR bit is set. If the RXDCERRIE bit of the RSPDIF_INTEN register is set, a corresponding interrupt will be generated. Set RXCFG[1:0] to 2'b00 to clear the error flag.

Timeout error (TMOUTERR)

When no conversion is detected during the 8192 cycle of the rspdif_ck clock and TWCNT overflows, RSPDIF timeout error occurs, and the TMOUTERR bit is set. If the RXDCERRIE bit of the RSPDIF_INTEN register is set, a corresponding interrupt will be generated. Set RXCFG[1:0] to 2'b00 to clear the error flag.

Parity error (PERR)

When the number of 0 or 1 is not an even number among the 28 information bits in a subframe, RSPDIF parity error occurs, and the PERR bit is set. If the PERRIE bit in the SPDIF_INTEN register is set, a corresponding interrupt will be generated. Set the PERRC bit to 1, to clear the PERR flag.

Note: Even if the interrupt is suspended, receiving incoming data will not be suspended, and RSPDIF will continue to send data to RSPDIF_DATA. If the software wants to ensure the consistency between the data read in the RSPDIF_DATA register and the value of the PERR bit, the PNCPEN bit must be set to 0.

Overrun error (RXORERR)

When both RSPDIF_DATA and RX buffer are full, while RSPDIF_DEC still writes a new data into the RX buffer, RSPDIF overrun error occurs, RXORERR is set, and this new data will not be written into the buffer. If the RXORERRIE bit of the RSPDIF_INTEN register is set, a corresponding interrupt will be generated. Set the RXORERRC bit to 1 to clear the RXORERR flag.

Note: Even if the RXORERR flag is suspended, when RXSTEOMEN = 0 and the RX buffer is empty, the next incoming data will still be stored. See ***Figure 33-12. RSPDIF overrun error when RXSTEOMEN = 0 and RXDF[1:0] = 2'b0x*** and ***Figure 33-13. RSPDIF overrun error when RXSTEOMEN = 0 and RXDF[1:0] = 2'b10***.

Figure 33-12. RSPDIF overrun error when RXSTEOMEN = 0 and RXDF[1:0] = 2'b0x

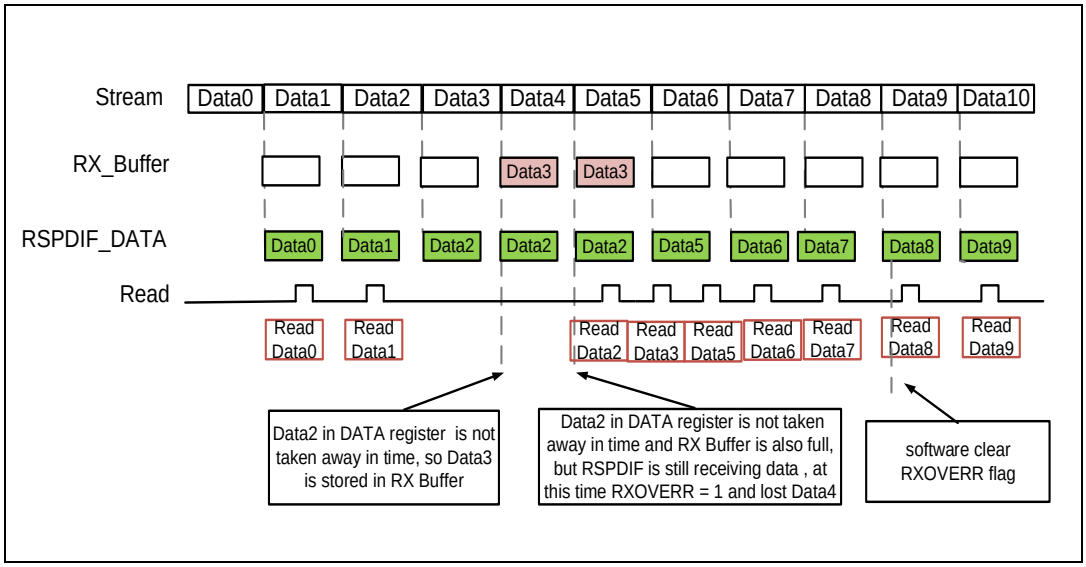

Figure 33-13. RSPDIF overrun error when RXSTEOMEN = 0 and RXDF[1:0] = 2'b10

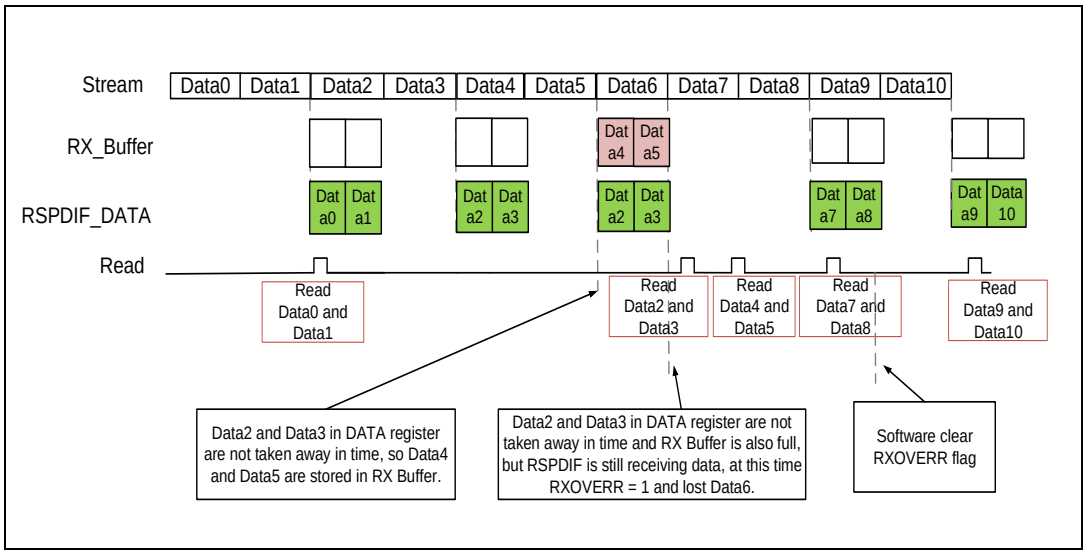

If RXSTEOMEN = 1, RSPDIF transmits stereo data. In order to avoid the problem of misalignment of the left and right channels, RSPDIF must discard the second data, even if there is space in the RX buffer. The incoming data can be written to the RX buffer normally, even if the RXORERR flag is still suspended. Refer to ***Figure 33-14. RSPDIF overrun error when RXSTEOMEN = 1 and RXDF[1:0] = 2'b0x*** and ***Figure 33-15. RSPDIF overrun error when RXSTEOMEN = 1 and RXDF[1:0] = 2'b10***.

Figure 33-14. RSPDIF overrun error when RXSTEOMEN = 1 and RXDF[1:0] = 2'b0x

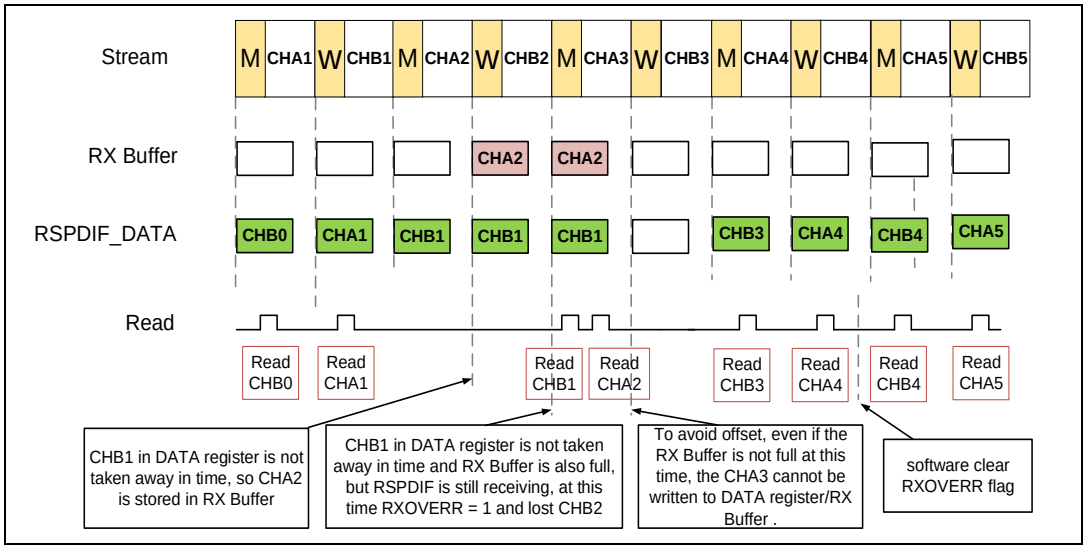
Stream
M CHA1 W CHB1 M CHA2 W CHB2 M CHA3 W CHB3 M CHA4 W CHB4 M CHA5 W CHB5
RX Buffer
CHA2
CHA2
RSPDIF_DATA
CHB0
CHA1
CHB1
CHB1
CHB1
CHB3
CHA4
CHB4
CHA5
Read
Read CHB0
Read CHA1
Read CHB1
Read CHA2
Read CHB3
Read CHA4
Read CHB4
Read CHA5
CHB1 in DATA register is not taken away in time, so CHA2 is stored in RX Buffer
CHB1 in DATA register is not taken away in time and RX Buffer is also full, but RSPDIF is still receiving, at this time RXOVERR = 1 and lost CHB2
To avoid offset, even if the RX Buffer is not full at this time, the CHA3 cannot be written to DATA register/RX Buffer .
software clear RXOVERR flag

Figure 33-15. RSPDIF overrun error when RXSTEOMEN = 1 and RXDF[1:0] = 2'b10

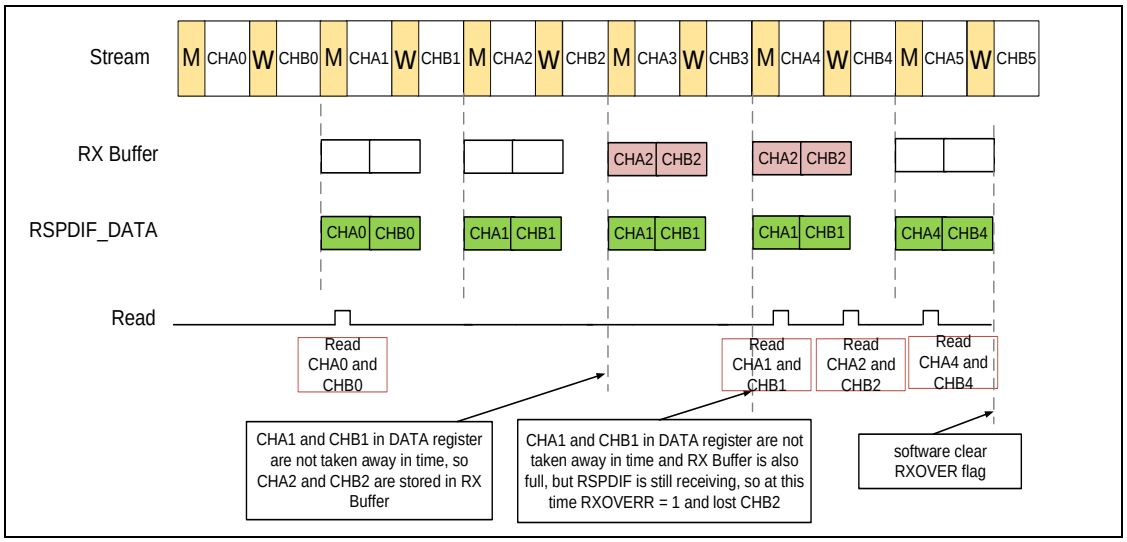

Interrupts

The RSPDIF interrupt events and flags are listed in *Table 33-13. RSPDIF interrupt events*.

Table 33-13. RSPDIF interrupt events

Flag	Interrupt event	Clear method	Enable control bit
SYNDO	SYNC is completed	Set SYNDBC bit in RSPDIF_STATC register to 1	SYNDOIE
RBNE	RSPDIF receive buffer is not empty	Read RSPDIF_DATA register	RBNEIE
PERR	In the 28 information bits of one subframe, 0 and 1 are not even numbers	Set PERRC bit in RSPDIF_STATC register to 1	PERRIE
RXORERR	Both RSPDIF_DATA and RX buffer are full, and RSPDIF_DEC still write a new data to RX buffer	Set RXORERRC bit in RSPDIF_STATC register to 1	RXORERRIE
CBNE	RSPDIF control flow receive buffer is not empty	Read RSPDIF_CHSTAT register	CBNEIE
SYNDB	Preamble B has been detected	Set SYDBC bit in RSPDIF_STATC register to 1	SYNDBIE
SYNERR	The synchronization fails	Clear RXCFG bits in RSPDIF_CTL register	RXDCERRIE
FRERR	The conversion sequence is incorrect in the 28 information bits or the preamble appears in an unexpected position or the expected preamble is not received		
TMOUTERR	TWCNT overflows		

33.4. Register definition

RSPDIF base address: 0x4000 4000

33.4.1. Control register (RSPDIF_CTL)

Address offset: 0x00

Reset value: 0x0000 0000

This register has to be accessed by word (32-bit).

31	30	29	28	27	26	25	24	23	22	21	20	19	18	17	16
Reserved										BKSCKEN	SCKEN	Reserved	RXCHSEL[2:0]		
										rw	rw		rw		

15	14	13	12	11	10	9	8	7	6	5	4	3	2	1	0
Reserved	WFRXA	MAXRT[1:0]		CFCHSEL	DMACBEN	PTNCPEN	CUNCPEN	VNCPEN	PNCPEN	RXDF[1:0]		RXSTEOMEN	DMAREN	RXCFG[1:0]	
	rw	rw		rw	rw	rw	rw	rw	rw	rw		rw	rw	rw	

Bits	Fields	Descriptions
31:22	Reserved	Must be kept at reset value.
21	BKSCKEN	Backup symbol clock enable This bit is set and cleared by software. 0: The RSPDIF does not generate a backup symbol clock. 1: The RSPDIF generates a backup symbol clock if SCKEN = 1 Please refer to ***RSPDIF clock management*** for information on how to program this field.
20	SCKEN	Symbol clock enable This bit is set and cleared by software. 0: The RSPDIF does not generate a symbol clock 1: The RSPDIF generates a symbol clock
19	Reserved	Must be kept at reset value.
18:16	RXCHSEL[2:0]	RSPDIF input channel selection 000: RSPDIF_CH0 selected 001: RSPDIF_CH1 selected 010: RSPDIF_CH2 selected 011: RSPDIF_CH3 selected 100 ~ 111: reserved
15	Reserved	Must be kept at reset value.
14	WFRXA	Wait for the four valid transition signal of the selected RSPDIF channel

		This bit is set and cleared by software. 0: Before starting the synchronization process, RSPDIF does not wait for the valid conversion signal from the selected RSPDIF channel. 1: Before starting the synchronization process, RSPDIF wait for the valid conversion signal from the selected RSPDIF channel.
13:12	MAXRT[1:0]	Maximum number of retries allowed during the RSPDIF synchronization phase 00: Do not allow retry (only one chance) 01: Allow up to 3 retries 10: Allow up to 15 retries 11: Allow up to 63 retries
11	CFCHSEL	The control flow acquires channel state source selection This bit is set and cleared by software. 0: Gets channel status from channel A 1: Gets channel status from channel B
10	DMACBEN	Control buffer DMA enable for control flow This bit is set and cleared by software. 0: Disable control flow DMA mode. 1: Enable control flow DMA mode. When this bit is set, a DMA request is generated whenever the CBNE flag is set.
9	PTNCPEN	Preamble type bits no copy enable bit This bit is set and cleared by software. 0: Copy the preamble type bits into the RSPDIF_DATA 1: Do not copy the preamble type bits into the RSPDIF_DATA, but write 0 instead.
8	CUNCPEN	Channel status and user bits no copy enable bit This bit is set and cleared by software. 0: Copy the channel status and user bits into the RSPDIF_DATA. 1: Do not copy the channel status and user bits into the RSPDIF_DATA, but write 0 instead.
7	VNCPEN	Validity bit no copy enable bit This bit is set and cleared by software. 0: Copy the validity bit into the RSPDIF_DATA. 1: Do not copy the validity bit into the RSPDIF_DATA, but write 0 instead.
6	PNCPEN	Parity error bit no copy enable bit This bit is set and cleared by software. 0: Copy the parity error bit into the RSPDIF_DATA. 1: Do not copy the parity error bit into the RSPDIF_DATA, but write 0 instead.
5:4	RXDF[1:0]	RX data format selection This bit is set and cleared by software. 00: The data format is described in the RSPDIF_DATA_F0 register, audio data is right aligned (LSB)

		01: The data format is described in the RSPDIF_DATA_F1 register, audio data is left aligned (MSB) 10: The data format is described in the RSPDIF_DATA_F2 register, which packs two 16-bit audio data into one 32-bit data 11: reserved
3	RXSTEOMEN	RX stereo mode enable This bit is set and cleared by software. 0: MONO mode 1: STEREO mode This bit is used in case of overrun situation in order to handle misalignment
2	DMAREN	Receiver DMA enable for data flow This bit is set and cleared by software. 0: Disable reception DMA mode. 1: Enable reception DMA mode. When this bit is set, the DMA request is generated whenever the RBNE flag is set.
1:0	RXCFG[1:0]	RSPDIF configuration 00: Disable RSPDIF 01: Enable RSPDIF synchronization only 10: Reserved 11: Enable RSPDIF

33.4.2. Interrupt enable register (RSPDIF_INTEN)

Address offset: 0x04

Reset value: 0x0000 0000

This register has to be accessed by word (32-bit).

31	30	29	28	27	26	25	24	23	22	21	20	19	18	17	16
Reserved															

15	14	13	12	11	10	9	8	7	6	5	4	3	2	1	0
Reserved									RXDCERRIE	SYNDOIE	SYNDBIE	RXORERRIE	PERRIE	CBNEIE	RBNEIE
									rw	rw	rw	rw	rw	rw	rw

Bits	Fields	Descriptions
31:7	Reserved	Must be kept at reset value.
6	RXDCERRIE	RSPDIF data decoding error interrupt enable This bit is set and cleared by software. 0: Disable 1: Enable When this bit is set, a RSPDIF data decoding error interrupt is generated if

		SYNERR, TMOUTERR or FRERR bit in the RSPDIF_STAT register is set.
5	SYNDOIE	Synchronization done interrupt enable This bit is set and cleared by software. 0: Disable 1: Enable When this bit is set, a synchronization done interrupt is generated if SYNDO bit in the RSPDIF_STAT register is set.
4	SYNDBIE	Synchronization block detected interrupt enable This bit is set and cleared by software. 0: Disable 1: Enable When this bit is set, a synchronization block detected interrupt is generated if SYNDB in the RSPDIF_STAT register is set .
3	RXORERRIE	RX overrun error interrupt enable This bit is set and cleared by software. 0: Disable 1: Enable When this bit is set, a RX overrun error interrupt is generated if RXORERR in the RSPDIF_STAT register is set.
2	PERRIE	Parity error interrupt enable This bit is set and cleared by software. 0: Disable 1: Enable When this bit is set, a parity error interrupt is generated if PERR in the RSPDIF_STAT register is set.
1	CBNEIE	RSPDIF_CHSTAT register no empty interrupt enable This bit is set and cleared by software. 0: Disable 1: Enable When this bit is set, a RSPDIF_CHSTAT register no-empty interrupt is generated if CBNE in the RSPDIF_STAT register is set.
0	RBNEIE	RSPDIF_DATA register no empty interrupt enable This bit is set and cleared by software. 0: Disable 1: Enable. When this bit is set, a RSPDIF_DATA register no-empty interrupt is generated if RBNE in the RSPDIF_STAT register is set.

33.4.3. Status register (RSPDIF_STAT)

Address offset: 0x08

Reset value: 0x0000 0000

This register has to be accessed by word (32-bit).

31	30	29	28	27	26	25	24	23	22	21	20	19	18	17	16
Reserved	CKCNT5[14:0]														
								r							

15	14	13	12	11	10	9	8	7	6	5	4	3	2	1	0
Reserved							TMOUTERR	SYNERR	FRERR	SYNDO	SYNDB	RXORERR	PERR	CBNE	RBNE
							r	r	r	r	r	r	r	r	r

Bits	Fields	Descriptions
31	Reserved	Must be kept at reset value.
30:16	CKCNT5[14:0]	The number of consecutive time clock cycles of 5 symbols counted using rspdif_ck This value can be used to estimate the S/PDIF symbol rate. Its accuracy is limited by the frequency of rspdif_ck. For example if the rspdif_ck is fixed to 84 MHz, and CKCNT5 = 147d. The estimated sampling rate of the S/PDIF stream is: Fs = 5 x rspdif_ck / (CKCNT5 x 64) ~ 44.6 kHz, so the closest standard sampling rate is 44.1 kHz. Note that CKCNT5 is updated by the hardware when SYNDO goes high, and then every frame.
15:9	Reserved	Must be kept at reset value.
8	TMOUTERR	Time out error 0: No timeout error is detected 1: Timeout error is detected When the counter TWCNT value reaches its maximum value, the bit is set to 1 by the hardware. It indicates that the time between transitions is too long. This usually means that there is no valid signal on the RSPDIF_CH input. If RXDCERRIE=1 in the RSPDIF_INTEN register, an interrupt is generated. Set RXCFG[1:0] to 2'b00 in RSPDIF_CTL register to clear this bit.
7	SYNERR	Synchronization error 0: No synchronization error is detected 1: Synchronization error is detected When synchronization fails due to the number of MAXRT retries, the bit is set to 1 by the hardware. If RXDCERRIE=1 in the RSPDIF_INTEN register, an interrupt is generated. Set RXCFG[1:0] to 2'b00 in RSPDIF_CTL register to clear this bit.
6	FRERR	Frame error 0: no Manchester coding error detected 1: Manchester coding error detected

		When an error occurs during receiving data, the bit is set to 1 by the hardware. Preamble does not appear in expected position, short transitions are not grouped by pair. This bit can be set to 1 by the hardware only when synchronization is complete (SYNDO = 1). If RXDCERRIE=1 in register RSPDIF_INTEN, an interrupt is generated. Set RXCFG[1:0] to 2'b00 in RSPDIF_CTL register to clear this bit.
5	SYNDO	Synchronization done 0: Synchronization is pending 1: Synchronization is completed When the synchronization phase is properly completed, the bit is set to 1 by the hardware.. If SYNDOIE = 1 in the RSPDIF_INTEN register, an interrupt is generated. Set SYNDOC bit in RSPDIF_STATC register to clear this bit.
4	SYNDB	Synchronization block detected 0: No "B" preamble detected 1: "B" preamble has been detected When a "B" preamble has been detected, the bit is set to 1 by the hardware. If SYNDBIE = 1 in the RSPDIF_INTEN register, an interrupt is generated. Set SYNDBC bit in RSPDIF_STATC register to clear this bit.
3	RXORERR	RX overrun error 0: No Overrun error 1: Overrun error is detected When RSPDIF is still receiving data while RBNE = 1 and both RSPDIF_DATA and RX buffer are full, the bit is set to 1 by the hardware. If RXORERRIE=1 in the RSPDIF_INTEN register, an interrupt is generated. Set RXORERRC bit in RSPDIF_STATC register to clear this bit. **Note:** When this bit is set, the RSPDIF_DATA register content is not lost but the last data received are lost.
2	PERR	Parity error 0: No parity error 1: Parity error When the received subframe contains an odd number of 0 and 1 in the data and status bits, the bit is set to 1 by the hardware. If PERRIE = 1 in the RSPDIF_INTEN register, an interrupt is generated. Set PERRC bit in RSPDIF_STATC register to clear this bit.
1	CBNE	RSPDIF_CHSTAT register is not empty 0: No control word available on RSPDIF_CHSTAT register 1: A control word is available on RSPDIF_CHSTAT register When there is control flow data in the RSPDIF_CHSTAT register, the bit is set to 1 by the hardware. If CBNEIE = 1 in the RSPDIF_INTEN register, an interrupt is generated.

		Read RSPDIF_CHSTAT register to clear this bit.
0	RBNE	RX buffer is not empty 0: Data is not received 1: Received data is ready to be read. When a valid data is available into RX buffer, the bit is set to 1 by the hardware. If RBNEIE = 1 in the RSPDIF_INTEN register, an interrupt is generated. Read RSPDIF_DATA register to clear this bit.

33.4.4. Status flag clear register (RSPDIF_STATC)

Address offset: 0x0C

Reset value: 0x0000 0000

This register has to be accessed by word (32-bit).

31	30	29	28	27	26	25	24	23	22	21	20	19	18	17	16
Reserved															

15	14	13	12	11	10	9	8	7	6	5	4	3	2	1	0
Reserved										SYNDOC	SYNDBC	RXORERRC	PERRC	Reserved	
										w	w	w	w		

Bits	Fields	Descriptions
31:6	Reserved	Must be kept at reset value.
5	SYNDOC	clears the synchronization done flag Set this bit to clear the SYNDO flag in the RSPDIF_STAT register.
4	SYNDBC	clears the synchronization block detected flag Set this bit to clear the SYNDB flag in the RSPDIF_STAT register.
3	RXORERRC	clears the RX overrun error flag Set this bit to clear the OVR flag in the RSPDIF_STAT register.
2	PERRC	clears the parity error flag Set this bit to clear the PERR flag in the RSPDIF_STAT register.
1:0	Reserved	Must be kept at reset value.

33.4.5. RX data register (RSPDIF_DATA)

Address offset: 0x10

Reset value: 0x0000 0000

This register has to be accessed by word (32-bit).

According to the value of RXDF[1:0], the receive data register has three different formats.

When RXDF[1:0]=2'b00, the format is as follows:

RX data register format 0 (RSPDIF_DATA_F0)

31	30	29	28	27	26	25	24	23	22	21	20	19	18	17	16
Reserved		PREF[1:0]		C	U	V	P	DATA[23:16]							
		r		r	r	r	r				r				

15	14	13	12	11	10	9	8	7	6	5	4	3	2	1	0
DATA[15:0]															
							r								

Bits	Fields	Descriptions
31:30	Reserved	Must be kept at reset value.
29:28	PREF[1:0]	Preamble type bits These bits indicate the preamble received. 00: not used 01: Preamble B received 10: Preamble M received 11: Preamble W received Note that if PTNCPEN = 1, this field is forced to zero
27	C	Channel status bit Contains the received channel status bit, if CUNCPEN = 0, otherwise it is forced to 0
26	U	User bit Contains the received user bit, if CUNCPEN = 0, otherwise it is forced to 0
25	V	Validity bit Contains the received validity bit if VNCPEN = 0, otherwise it is forced to 0
24	P	Parity error bit Contains a copy of PERR bit if PNCPEN = 0, otherwise it is forced to 0
23:0	DATA[23:0]	Data value Contains the 24 received data bits, right-aligned.

When RXDF[1:0]=2'b01, the format is as follows:

RX data register format 1 (RSPDIF_DATA_F1)

31	30	29	28	27	26	25	24	23	22	21	20	19	18	17	16
DATA [23:8]															
							r								

15	14	13	12	11	10	9	8	7	6	5	4	3	2	1	0
DATA [7:0]								Reserved		PREF[1:0]		C	U	V	P
				r							r	r	r	r	r

Bits	Fields	Descriptions
31:8	DATA[23:0]	Data value Contains the 24 received data bits, left-aligned.
7:6	Reserved	Must be kept at reset value.
5:4	PREF[1:0]	Preamble type bits These bits indicate the preamble received. 00: not used 01: Preamble B received 10: Preamble M received 11: Preamble W received Note that if PTNCPEN = 1, this field is forced to zero
3	C	Channel status bit Contains the received channel status bit, if CUNCPEN = 0, otherwise it is forced to 0
2	U	User bit Contains the received user bit, if CUNCPEN = 0, otherwise it is forced to 0
1	V	Validity bit Contains the received validity bit if VNCPEN = 0, otherwise it is forced to 0
0	P	Parity error bit Contains a copy of PERR bit if PNCPEN = 0, otherwise it is forced to 0

When RXDF[1:0]=2’b10, the format is as follows:

RX data register format 2 (RSPDIF_DATA_F2)

31	30	29	28	27	26	25	24	23	22	21	20	19	18	17	16
DATA2[15:0]															
r															

15	14	13	12	11	10	9	8	7	6	5	4	3	2	1	0
DATA1[15:0]															
r															

Bits	Fields	Descriptions
31:16	DATA2[15:0]	When in steo mode: this field contains the channel A data. When in mono mode: this field contains the oldest value.
15:0	DATA1[15:0]	When in steo mode: this field contains the channel B data. When in mono mode: this field contains the more recent value.

33.4.6. RX Channel status register (RSPDIF_CHSTAT)

Address offset: 0x14

Reset value: 0x0000 0000

This register has to be accessed by word (32-bit).

31	30	29	28	27	26	25	24	23	22	21	20	19	18	17	16
Reserved							SOB	CHS[7:0]							
							r	r							

15	14	13	12	11	10	9	8	7	6	5	4	3	2	1	0
USER[15:0]															
r															

Bits	Fields	Descriptions
31:25	Reserved	Must be kept at reset value.
24	SOB	Start of block This bit indicates if the bit CHS[0] corresponds to the first bit of a new block 0: CHS[0] is not the first bit of a new block 1: CHS[0] is the first bit of a new block
23:16	CHS[7:0]	Channel status information Bit CHS[0] is the oldest value
15:0	USER[15:0]	User data information Bit USR[0] is the oldest value, and comes from channel A, USR[1] comes channel B. So USR[n] bits come from channel A is n is even, otherwise they come from channel B.

33.4.7. RX data threshold register (RSPDIF_DTH)

Address offset: 0x18

Reset value: 0x0000 0000

This register has to be accessed by word (32-bit).

31	30	29	28	27	26	25	24	23	22	21	20	19	18	17	16
Reserved			THLO[12:0]												
									r						

15	14	13	12	11	10	9	8	7	6	5	4	3	2	1	0
Reserved			THHI[12:0]												
									r						

Bits	Fields	Descriptions
31:29	Reserved	Must be kept at reset value.
28:16	THLO[12:0]	Low threshold

		THLO = 1.5 x UI / T_{rspdif_ck} This field contains the current low threshold estimation. This value can be used to estimate the sampling rate of the received stream. The accuracy of THLO is limited to a period of the rspdif_ck. The sampling rate can be estimated as follow: Sampling Rate = [2 x THLO x T_{rspdif_ck} +/- T_{rspdif_ck} x 2/3 Note that THLO is updated by the hardware when SYNDO goes high, and then every frame.
15:13	Reserved	Must be kept at reset value.
12:0	THHI[12:0]	High threshold THHI = 2.5 x UI / T_{rspdif_ck} This field contains the current high threshold estimation. This value can be used to estimate the sampling rate of the received stream. The accuracy of THHI is limited to a period of the rspdif_ck. The sampling rate can be estimated as follow: Sampling Rate = [2 x THHI x T_{rspdif_ck} +/- T_{rspdif_ck}] x 2/5 Note that THHI is updated by the hardware when SYNDO goes high, and then every frame.

34. Serial Audio Interface (SAI)

34.1. Overview

The Serial Audio Interface (SAI) is designed to target a wide range of commonly used audio protocols, both in mono and stereo modes, such as I2S, PCM/DSP, AC'97, LSB or MSB-justified and TDM. The audio module can be output as SPDIF when configured in transmitter mode.

To realize these multitudes of configuration, two identically independent audio sub-blocks are implemented. Each audio sub-block contains up to 4 IO pins (SD, SCK, FS, and MCLK). Parts of these pins are designed to be shareable when the two audio sub-blocks are configured to be synchronous with each other.

The SAI can be configured to any of the master/slave and transmitter/receiver combination, full/half-duplex operating mode depends on synchronous/asynchronous configuration of the audio sub-blocks.

34.2. Characteristics

- Two independent audio sub-blocks.
- Each audio sub-block can be configured as any of the master/slave and transmitter/receiver combination with 8-word FIFO.
- Local clock divider logic to satisfy the various audio sampling rates.
- Flexible audio protocol configuration such as I2S, PCM/DSP, AC'97, LSB or MSB-justified and TDM.
- PDM interface, supporting up to 4 microphone pairs (GD32H7xx support 3 microphone pairs).
- Mono/Stereo audio capability with mute option.
- Frame Synchronization configuration (active level, active length and offset).
- Each audio frame contains up to 16 configurable slots.
- Slot length is flexible, and can be configured as active or inactive.
- Each slot can hold a data of size 8-, 10-, 16-, 20-, 24-, and 32-bits with configurable first bit offset, and configurable LSB or MSB data transfer.
- Serial clock strobe edge selection (SCK).
- Error flag and interrupt sources
  - FIFO overrun and underrun
  - Frame synchronization advanced detection in salve mode.
  - Frame synchronization postpone detection in slave mode.
  - AC'97 codec not ready.
  - Wrong clock configuration
- Two independent DMA interface for each audio sub-block. Support slave mode with a

frequency up to 4MHz

34.3. Function overview

34.3.1. Block diagram

Figure 34-1. block diagram

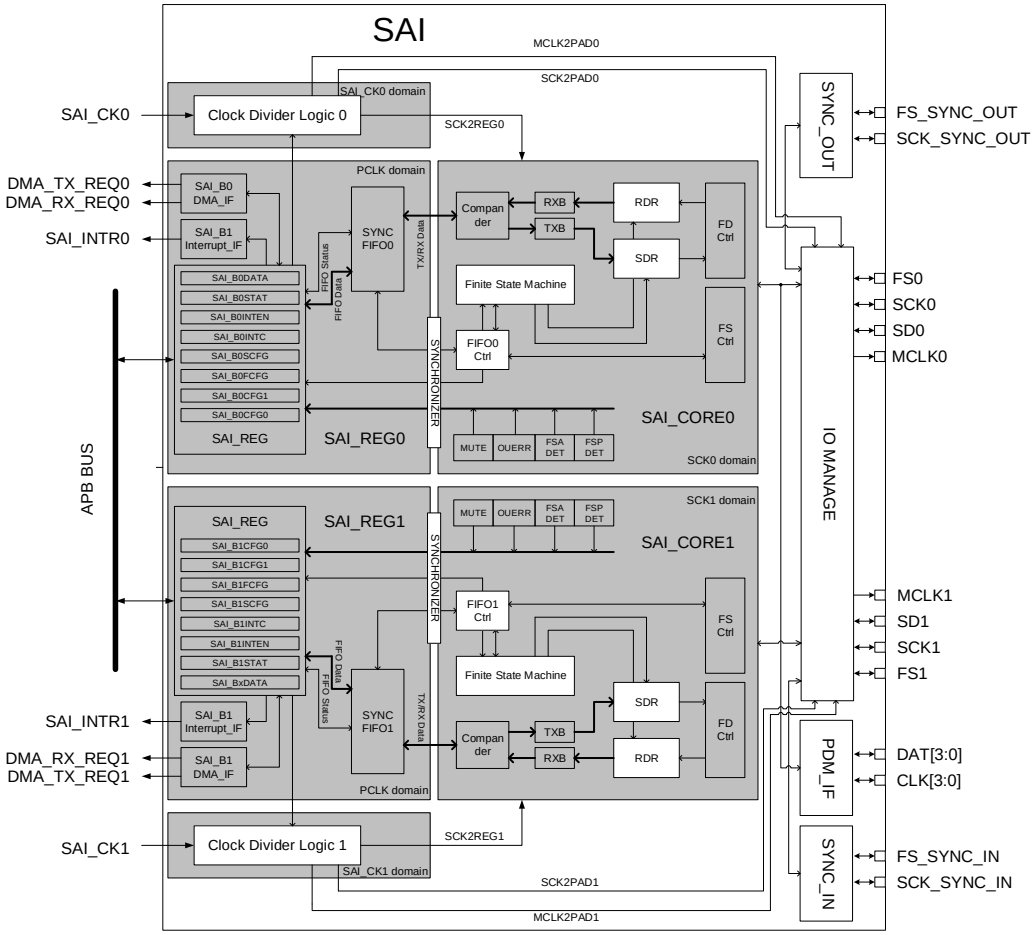

Note: GD32H7xx PDM interface signals are only valid for DAT[2:0] and CLK[1:0].

The flexible audio transceiver is the integration of two identically independent sub-blocks, with an IO management module attached to their outputs. Each audio sub-block is composed of three isolated timing domain, the SAI_CLK, FCLK, and PCLK domain. Clock divider logic which defines the audio sampling rate resides in SAI_CLK domain, its clock output is wired to FCLK domain where SAI main functional state machine, compress/decompress, transition/reception logic and interrupt generation logic is. The main control registers and the synchronous FIFO is located in the PCLK domain. The synchronous FIFO can be accessed either by ARM CPU APB Bus or by DMA controller.

Each of the audio sub-block can be configured as any combination of master/slave and transmitter/receiver pair, the Frame Synchronization (FS) and Serial Clock (SCK) are

generated in master mode, and received in slave mode from an external master or another audio sub-block in synchronous mode. The Master Clock (MCLK) generated only in master mode for external DAC/ADC operations. There is one exception that, when SAI is configured in AC'97 protocol, FS is forced to be an output, independent of master/slave configurations. The Serial Data (SD) IO pin is configured as output in transition and input in reception.

The IO Management block controls the IO pins of each audio sub-block, when the two sub-blocks are declared synchronous with each other, FS, SCK and MCLK can be shared, those pins of the synchronous sub-block are freed and can be used as general purpose IO.

34.3.2. Clock divider

The clock divider logic which is present in both SAI audio sub-blocks turns on only when they are configured as master devices, otherwise it is off and both MCLK and SCK output stays low. The divider's source clock SAI_CK (refer to ***Reset and clock unit (RCU)*** chapter) is recommended to take on 2 specific values, 45.1584 MHz and 49.152 MHz to generate standard audio sampling rate. The clock divider logic is composed of a primary clock divider which is used to generate the required master clock (MCLK) and a secondary clock divider which is used to generate the bit clock (SCK), its block diagram is as follows.

Figure 34-2. Clock divider logic

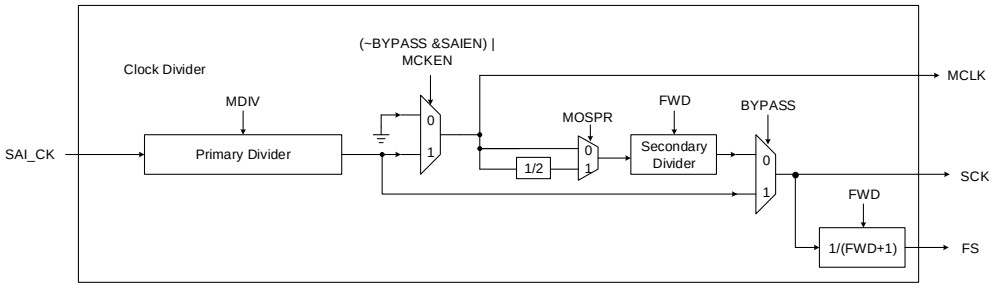

The primary clock divider's ratio PDIV is a direct link to Master Clock Divider Ratio control field inside SAI control register, its output frequency could be obtained by the following formula.

$$f_{MCLK} = \begin{cases} \frac{f_{SAI_CK}}{MDIV}, & MDIV \neq 0 \\ f_{SAI_CK}, & MDIV = 0 \end{cases} \quad (34\text{-}1)$$

Note: The formula above holds only when BYPASS is not valid, SAI is on and MCKEN is on, otherwise, MCLK stays low level.

The secondary clock divider's ratio SDIV is connected to the Frame width (FWD) control field inside SAI frame configuration register, when BYPASS is off, the secondary divider's input is linked to the primary divider's output stage. The following formula determines the relationship between SAI_CK and bit clock (SCK) sampling rate.

$$f_{SCK} = \frac{f_{SAI_CK} \times (FWD + 1)}{MDIV \times (MOSPR + 1) \times 256} \quad (34\text{-}2)$$

The frame synchronization frequency is given by:

$$f_{FS} = \frac{f_{SAI_CK}}{MDIV \times (MOSPR + 1) \times 256} \quad (34\text{-}3)$$

When BYPASS is set, the master clock (MCLK) is turned off with a fixed output value of 0, while the bit clock (SCK) is linked directly to SAI_CK. In addition, there is no restriction on the frame length value as long as the frame length is bigger or equal to 8.

When BYPASS is cleared, It is necessary to set (FWD + 1) equals to the result of an exponential function of base 2 in master mode to guaranty T_{SCK} divisible by T_{MCLK}.

Some of the commonly used audio sampling rate configurations when frame width is 256-bit are listed in the ***Table 34-1. Commonly used audio sampling rate***.

Table 34-1. Commonly used audio sampling rate

SAI_CK Clock Rate	Standard Audio Sampling Rate	Master Clock Divide Ratio
192kHz x 256	192 kHz	MDIV = 1
	96 kHz	MDIV = 2
	48 kHz	MDIV = 4
	16 kHz	MDIV = 12
	8 kHz	MDIV = 14
44.1kHz x 256	44.1 kHz	MDIV = 1
	22.05 kHz	MDIV = 2
	11.025 kHz	MDIV = 4

34.3.3. Operating mode

The SAI audio sub-blocks can be configured in any combination of the master/slave and transmitter/receiver pair independently.

Master

Frame synchronization (FS) is always generated by the master at the start of a frame as long as the FIFO is not empty to indicate frame start or channel identification. Serial clock (SCK) and master clock (MCK) are other signals generated by the master, SCK is used exclusively by the slave, acting as its bit clock. Unlike FS, SCK and MCLK's generation is not conditioned by the emptiness of the FIFO, they are generated as soon as the audio sub-block is enabled.

Slave

Slave receives FS and SCK signal from the master, its source depends on whether the audio sub-block is declared synchronous or asynchronous. When asynchronous mode is chosen, the FS and SCK signals source is connected directly to the chip level IO ports, while when synchronous mode is chosen, the FS and SCK signal is wired to another audio sub-block's FS and SCK signal. Users must always enable the slave before the master; otherwise the slave will not receive the complete data from the master.

Transmitter

When the audio sub-block is configured as transmitter, serial data (SD) is an output. If the FIFO is still empty after the audio sub-block is enabled, a 0 value is sent, and the underrun flag (OUERR) is raised.

Receiver

When the audio sub-block is configured as receiver, serial data (SD) is an input. Slave receiver always looks at the FS signal, when the first active edge is observed, it stores the received data, the coordination of the following data reception is handled by the internal finite state machine, and the receiver terminates reception at the end of a frame where a disable signal has already been set.

34.3.4. SAI synchronization mode

SAI synchronization mode includes two modes: internal synchronization mode and external synchronization mode.

Internal synchronization

The internal synchronization mode has the advantage of reducing the number of external pins occupied during communication. The SAI sub-modules SAI_B0 and SAI_B1 run synchronously, and they will share the SAI_FS and SAI_SCK signals, thereby releasing the GPIO pins of SCKx, FSx and MCLKx.

The SAI sub-module in internal synchronization mode can be configured in the following modes in full-duplex communication:

1. SAI_B0 (or SAI_B1) is configured as the master module, and SAI_B1 (or SAI_B0) is configured as the slave module.
2. Both SAI_B0 and SAI_B1 are configured as slave modules.
3. SAI_B0 (or SAI_B1) is configured as an asynchronous module, and SAI_B1 (or SAI_B0) is configured as a synchronous module.

Note: Due to the internal resynchronization phase, the frequency of the PCLK APB is required to be above twice the bit rate clock frequency.

External synchronization

External synchronization means that the SAI audio sub-module is synchronized with other SAIs. The SYNO[1:0] in the SAI_SYNCFG register is configured to determine the synchronization source that provides FS and SCK signals for other SAIs(SAI_B0 or SAI_B1). By configuring SYNI[1:0] in the SAI_SYNCFG register, it is determined which SAI is selected by the SAI receiving the synchronization signal for synchronization. By configuring the SYNCMOD[1:0] in the SAI_BxCFG0 register, specify whether the SAI audio sub-module is synchronized with other SAIs.

If both audio sub-modules in SAI need to be synchronized with another SAI, each audio sub-module can be configured to synchronize with another SAI module by configuring the SYNCMOD[1:0] bits or configure an audio sub-module to synchronize with another SAI module by configuring the SYNCMOD[1:0] bits.Then configure the other audio sub-modules to synchronize with the second SAI audio sub-module by configuring the SYNCMOD[1:0] bits.

Table 34-2. External synchronization configuration is a reference for external synchronization configuration.

Table 34-2. External synchronization configuration

SAI module	SYNI =2	SYNI =1	SYNI =0
SAI0	SAI2 sync.	SAI1 sync.	Reserved
SAI1	SAI2 sync.	Reserved	SAI0 sync.
SAI2	Reserved	SAI1 sync.	SAI0 sync.

34.3.5. Frame configuration

Frame synchronization

Frame synchronization is the coordination signal between master and slave to initiate a transfer. A number of parameters were implemented to manipulate with its waveform.

Frame synchronization advancement

Frame synchronization active edge could be aligned with the start of the first bit of the first slot, or one bit clock (SCK) cycle in advance, depending on the control field FSOST in SAI_BxFCFG register. *Figure 34-3 FS active width* shows how the FS waveform is changed.

Frame synchronization active width

Frame synchronization active width as shown in the following diagram depends on the control field FSAWD in SAI_BxFCFG register, its actual width equals (FSAWD + 1) SCK clock cycles. The minimum is 1 SCK clock cycle, while the maximum is 128 SCK clock cycles, which is half the maximum frame width. When FSFUNC is set, FS determines not only frame start, but also channel identification, (FSAWD+1) has to set equals half the frame width, otherwise the audio sub-block's function is not guaranteed.

Figure 34-3 FS active width

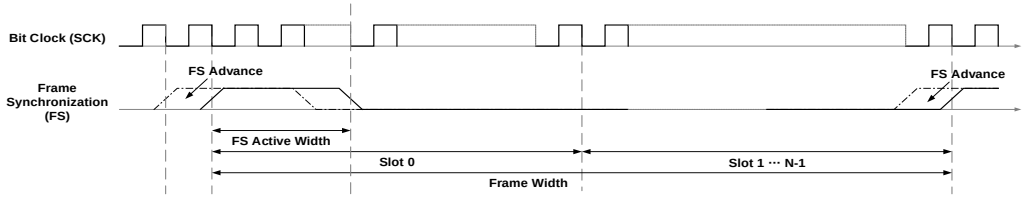

Frame synchronization polarity

Frame synchronization active level could be configured through FSPL control filed in SAI_BxFCFG register, as shown in the ***Figure 34-4 FS polarity***.

Figure 34-4 FS polarity

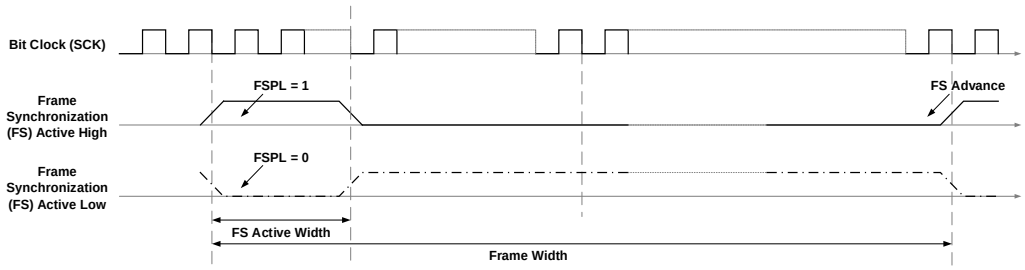

Frame synchronization function

Frame synchronization function definition is configured though the FSFUNC in SAI_BxFCFG register. Two specific function could be selected, when FSFUNC is set to 1, FS not only represent frame start, but also channel number identification, in this case, frame active width (FSAWD + 1) should be configured to half of the frame width, as shown in ***Figure 34-5 FS function***, otherwise the audio sub-block behavior is not guaranteed. When FSFUNC is set to 0, FS only represents frame start.

Figure 34-5 FS function

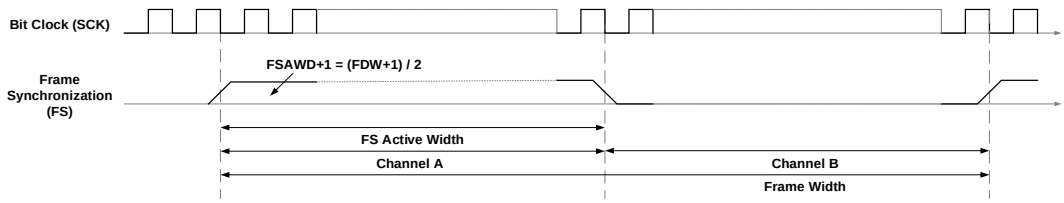

Frame width

Frame width cannot be lower than 8-bit, which corresponding to one byte of data, and cannot exceed 256 bits.

In master mode, if BYPASS is cleared, frame length (FWD+1) should be set to a value equals the result of a base 2 exponential function within 8 to 256 to guarantee an integer number of MCLK cycles within one SCK cycle, this is must for correct external DAC/ADC operations. Otherwise error clock flag (ERRCK) is raised in SAI_BxSTAT register, and an interrupt is generated if error clock interrupt enable (ERRCKIE) is set in SAI_BxINTEN register. While if BYPASS is set, there will be no restriction on frame length configuration, master clock is automatically disabled.

In slave mode, frame length configuration is used to coordinate the internal finite state machine knowing the start and the end of an active frame. Another utility is used for advanced or postponed frame synchronization detection, an error flag is raised if this situation do occur and an interrupt is generated if the corresponding interrupt enable bit is set, refer to chapters

Error flags and *Interrupts* for more details.

34.3.6. Slot configuration

Each SAI frame could be logically divided up to 16 slots, each slot's activation status and their distribution is further controlled through the configuration registers. Slot width can be configured to 16-, 32-bits or the same as data width through the SLOTWD control field in the SAI_BxSCFG register.

Slot activation

Each slot's activation status could be managed independently through slot activation vector (SLOTAV) in SAI_BxSCFG register. SLOTAV is a 16-bits wide control field, and each bit controls the corresponding slot's activation status. The logical division of slots could be shown in the *Figure 34-6 Slot activation*.

Figure 34-6 Slot activation

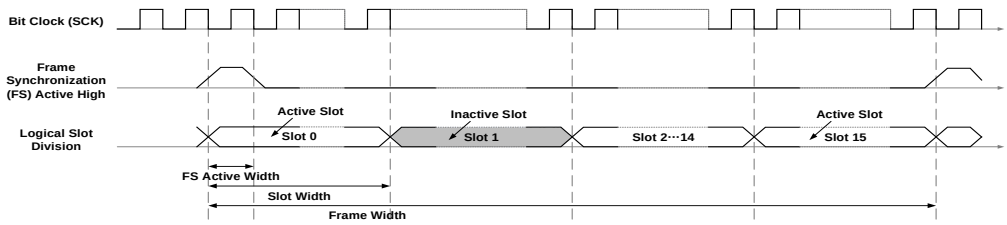

Slot distribution

There can be not slot distribution under a specific circumstance that the product of slot number and slot width is less than frame width. Slot section is defined where there is slot distribution; otherwise, it is called a null section. When FSFUNC set to 0, where FS only signals frame start, the null section follows the last slot until the start of the next frame, as shown in the *Figure 34-7 Slot distribution when FUNC = 0.*

Figure 34-7 Slot distribution when FUNC = 0

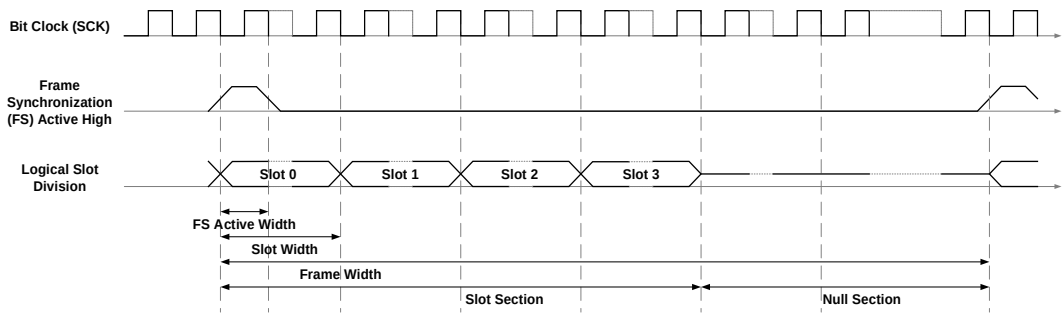

When FSFUNC = 1, where FS not only signals frame start, but also channel number identification, slot section and null section are evenly distributed to both channels. Null section fills the space between the last slots of the current channel till the start of the next channel's slot.

Figure 34-8 Slot distribution when FUNC = 1

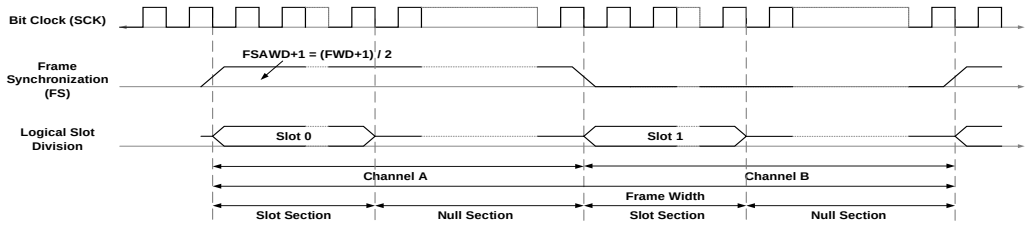

Serial data output management on inactive slots

Serial data (SD) output behavior in the vicinity of inactive slots could be set according to the management policy defined in the serial data output mode (SDOM) bit in SAI_BxSCFG register, either SAI releases or drives a 0 value to the output. There are three special cases of SD output behavior, offset and free region needs special attention. Slot partition convention, namely offset, data and free region used in this manual is depicted in the ***Figure 34-9 Slot partition convention***.

Figure 34-9 Slot partition convention

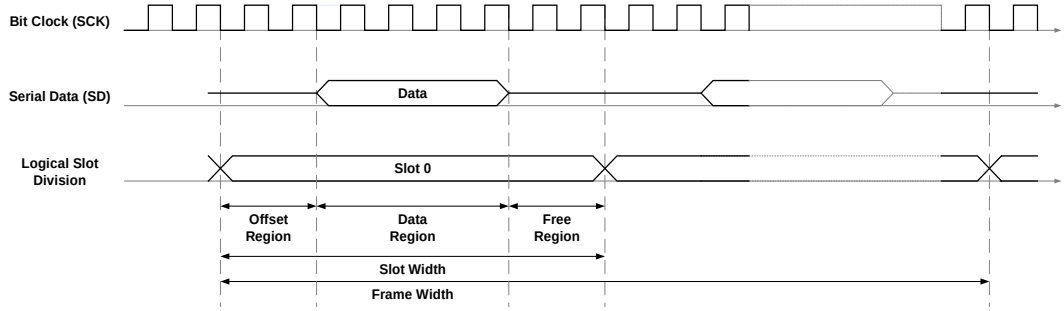

Firstly, SD output during the offset region is decided by SDOM, if SDOM is set to 1, SAI will release the output, else a 0 is sent on the SD output, the diagram ***Figure 34-10 Offset region treatment*** shows the differences.

Figure 34-10 Offset region treatment

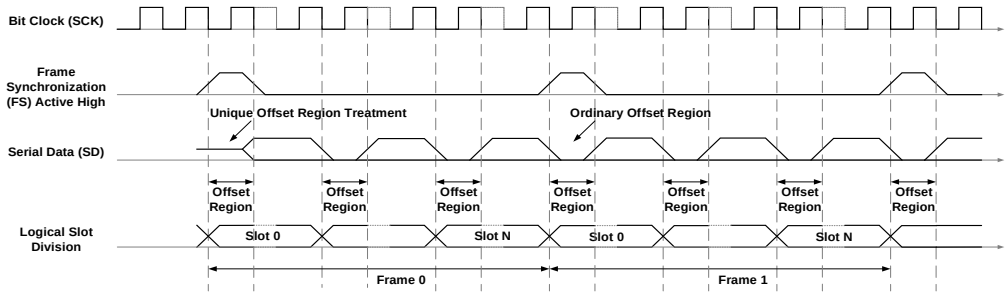

Secondly, SD output during the free region of the last slot has its reference on the activation status of the first slot, when SDOM is set, if slot 0 is inactive, SD output will be released, else a 0 is sent on the SD output. When SDOM is cleared, SD output is low independent of other slots activation status.

Lastly, SD output behavior during the offset and free region of slots in the middle of a frame has its reference on their next slot's activation status. If the following slot is inactive, and free

region is present, SD output will be release when SDOM set to 1, and drive to 0 if not. SD output behavior of offset and free region near active and inactive slot is shown in the ***Figure 34-11 SD output management***.

Figure 34-11 SD output management

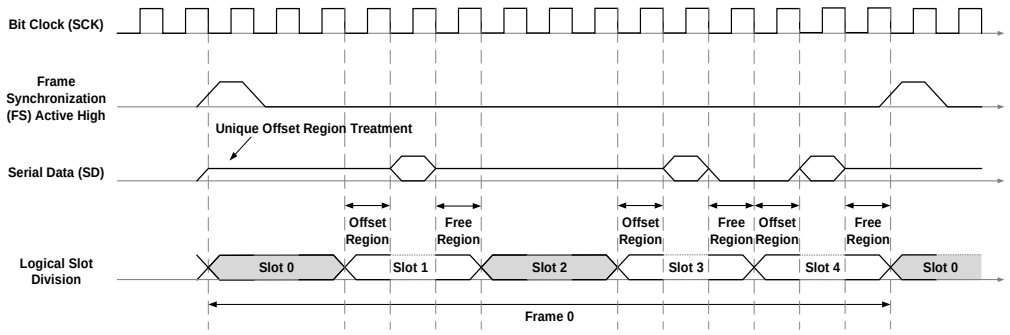

34.3.7. Data configuration

Data width is also flexible, it can take on the value of 8-, 10-, 16-, 20-, 24-bits and 32-bits wide, which is configured through the data width (DATAWD) control field in the SAI_BxSCFG register. Data inside an active slot could be shifted backward by setting the data offset (DATAOST), also located in the SAI_BxSCFG register. As described in the SD output management section (refer to ***Frame configuration***), the space between the start of a slot and the first bit of the data is called the offset region, and the space between the last bit of the data and the end of the slot is the free region. When the audio sub-block is configured as transmitter, and offset or free region is present, a 0 is sent through the SD output, the actual behavior of the SD line not only depends on the output value, but also on the line management condition and the slot activation status of nearby slots. When the audio sub-block is configure as receiver, and offset or free region is present, data reception during these regions will be ignored. Data transmission and reception are shown in ***Figure 34-12 Data configuration***.

Figure 34-12 Data configuration

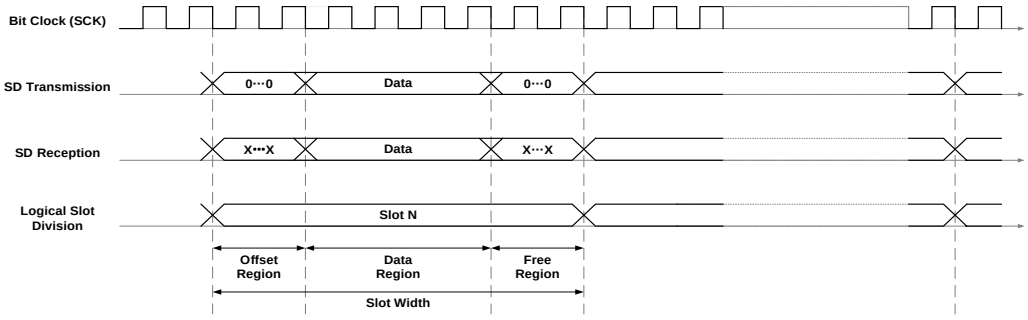

34.3.8. Internal FIFO

An 8-word depth internal FIFO is implemented inside each SAI audio sub-block independently to increase transaction efficiency, these FIFO could be accessed by both CPU and DMA. FIFO request interrupt mechanism used to call for CPU and DMA access, request is raised depending on operating mode, FIFO threshold, FIFO status, and DMA burst size. FIFO

request interrupt generation is summarized in the ***Table 34-3 FIFO request generation conditions*** and cleared if the underlying conditions are not satisfied.

Table 34-3 FIFO request generation conditions

Transmitter: OPTMOD[0] = 0				Receiver: OPTMOD[0] = 1			
FIFO Threshold	FFTH	FIFO Status	FFSTAT	FIFO Threshold	FFTH	FIFO Status	FFSTAT
Empty	= 000	Empty	= 000	Empty	= 000	Not Empty	≥ 001
1/4 Full	= 001	<1/4 Full	<010	1/4 Full	= 001	≥ 1/4 Full	≥ 010
1/2 Full	= 010	<1/2 Full	<011	1/2 Full	= 010	≥ 1/2 Full	≥ 011
3/4 Full	= 011	<3/4 Full	<100	3/4 Full	= 011	≥ 3/4 Full	≥ 100
Full	= 100	Not Full	<101	Full	= 100	Full	= 101

FIFO flush is done through the FLUSH control field in SAI_BxCFG1 register, when FLUSH is set, all the data content in the FIFO will be cleared, and read/write pointer reset to 0.

Note: DMA request generation is implicitly depended on FIFO request, detailed information will be provided in DMA interface section.

34.3.9. PDM interface

Digital microphones can realize data transmission through the PDM interface. The PDM interface supports up to 4 pairs of digital microphones in parallel.

Timing and connection

The schematic diagram of microphones connected by PDM interface is shown in the ***Figure 34-13. PDM typical connection and timing***.

Figure 34-13. PDM typical connection and timing

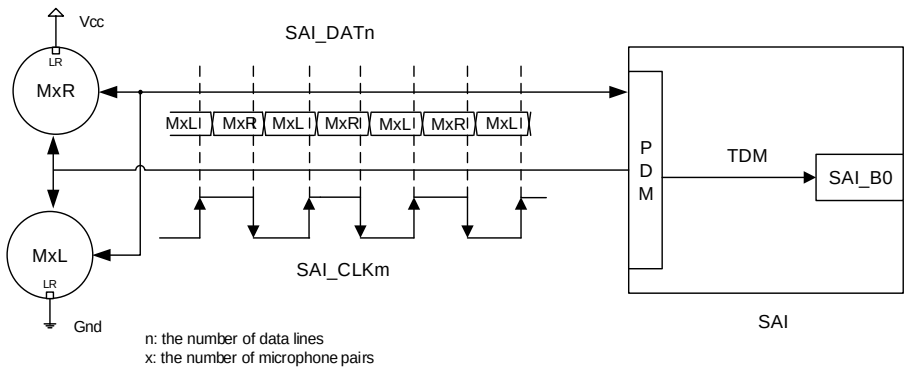

Note: GD32H7xx PDM interface signals are only valid for DAT[2:0] and CLK[1:0].

The microphone LR pin connected to VCC is the left microphone channel, and the one connected to GND is the right microphone channel. The left channel and the right channel microphone share one clock line SAI_CLK. The left channel data is sampled on the rising edge, and the right channel data is sampled on the falling edge to complete the two-channel

data collection.

Note: The PDM interface can only be used in connection with SAI_B0.

PDM interface enable

The PDM interface enabling process is as follows:

1. Configure TDM as master mode, OPTMOD[0:1] of SAI_B0CFG0 register is host receiving mode, and PROT[1:0] bits are free protocol.
2. Configure the PDM interface: select the number of microphones by configuring the MICNUMSEL[1:0] bits of the SAI_PDMCTL register, and configure the CLKLx bit in the SAI_B0CFG0 register to enable the clock.
3. Configure the PDMEN bit in the SAI_PDMCTL register to enable the PDM interface.
4. Configure the SAIEN bit in the SAI_B0CFG0 register and enable SAI_B0.

Data processing

The data processing sequence in PDM is as follows:

1. SAI_B0 generates the clock to generate the bit stream clock via the TDM link to the PDM interface
2. By configuring the DPLx[2:0] and DPRx[2:0] bits of the SAI_PDMCFG register, the PDM interface is implemented to interleave and delay the bit stream data SAI_DATx generated by the microphone, thereby adjusting the delay generated by the microphone.
3. The shift register converts the data stream into bytes, and transmits the data to SAI_B0 through the TDM link.

Figure 34-14. PDM data processing diagram

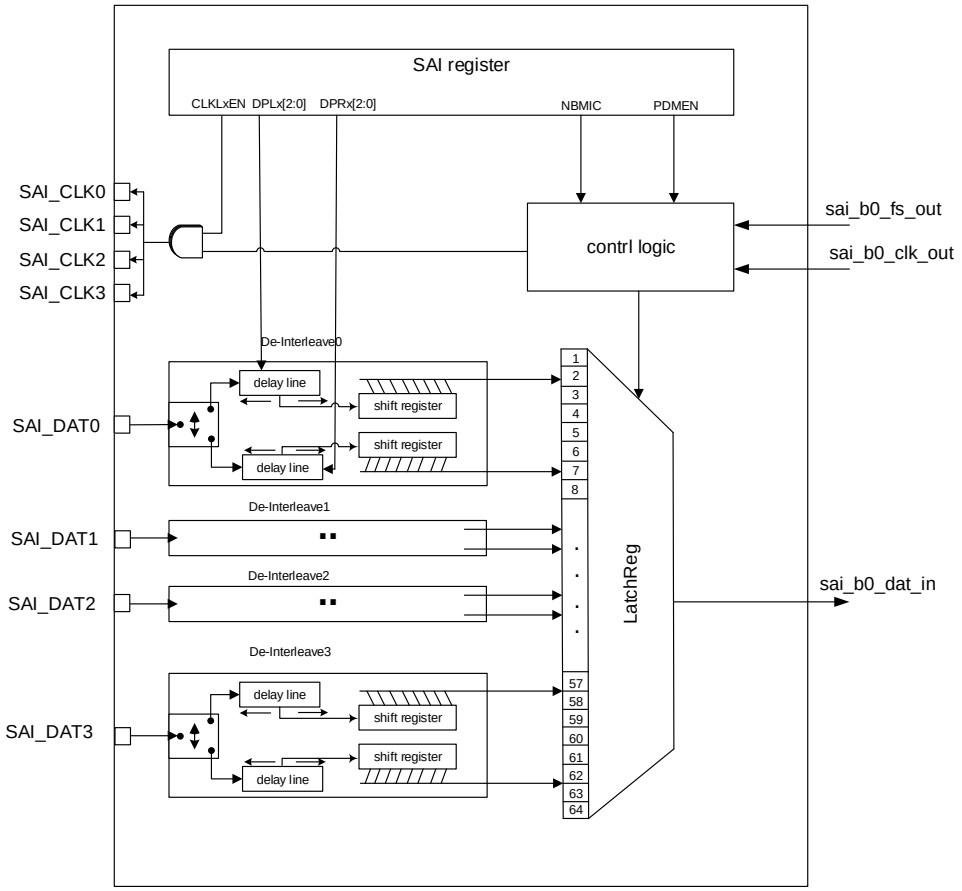

Data transfer start process

After the PDM interface is enabled, the microphone data sampling starts after the frame synchronization event occurs. After 8 SAI_CK clocks, the microphone data will be transmitted to the SAI through the TDM interface. The ***Figure 34-15. The start-up process of PDM data transmission*** shows the start-up process of PDM data transmission..

Figure 34-15. The start-up process of PDM data transmission

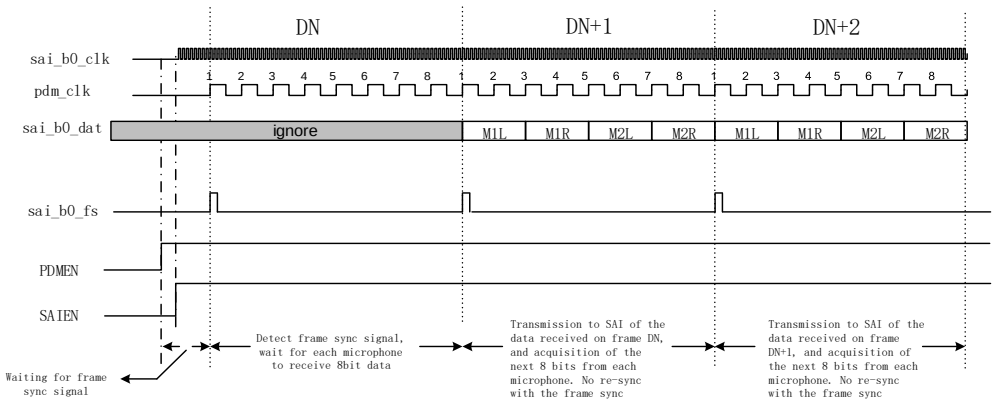

Data format

The data format from the microphone data is mainly related to the following configuration,

1. Configure MICNUMSEL[1:0] in the PDMCTL register to set the number of microphones.
2. Configure SLOTWD[1:0] in the BxSCFG register to set the slot width.
3. Configure the SHIFTDIR bit to set the MSB/LSB of the transmitted data.

Table 34-4 Get the microphone data read register times under different configurations

Number of microphones	Slot width	The number of times to read the BxDATA register to obtain the microphone data
8	32	2
	16	4
	8	8
4	32	1
	16	2
	8	4
2	16	1
	8	2

Note: GD32H7xx supports 3 pairs of microphones.

The following figure shows the schematic diagram of register data arrangement under different number of microphones and slot width.

Figure 34-16. Eight microphones, under different slot widths, BxDATA register data

format

Eight microphone configuration

32-bit slot width SHIFTDIR = 0

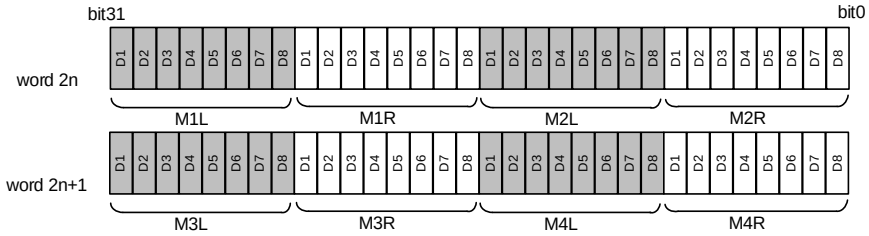

16-bit slot width SHIFTDIR = 0

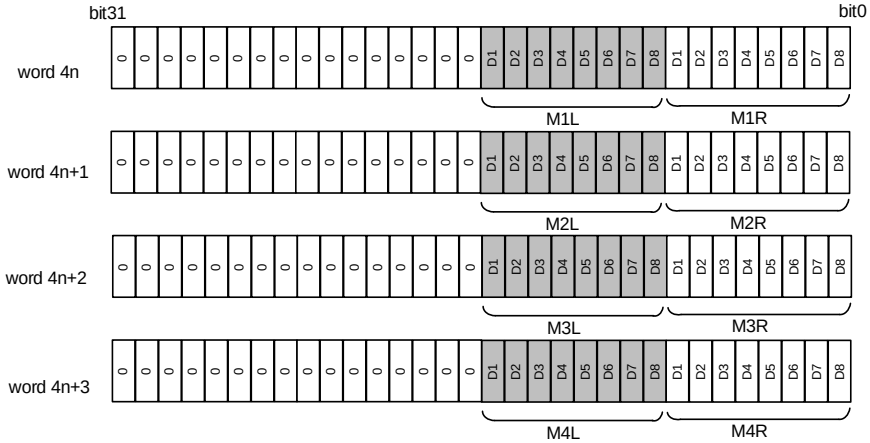

8-bit slot width SHIFTDIR = 0

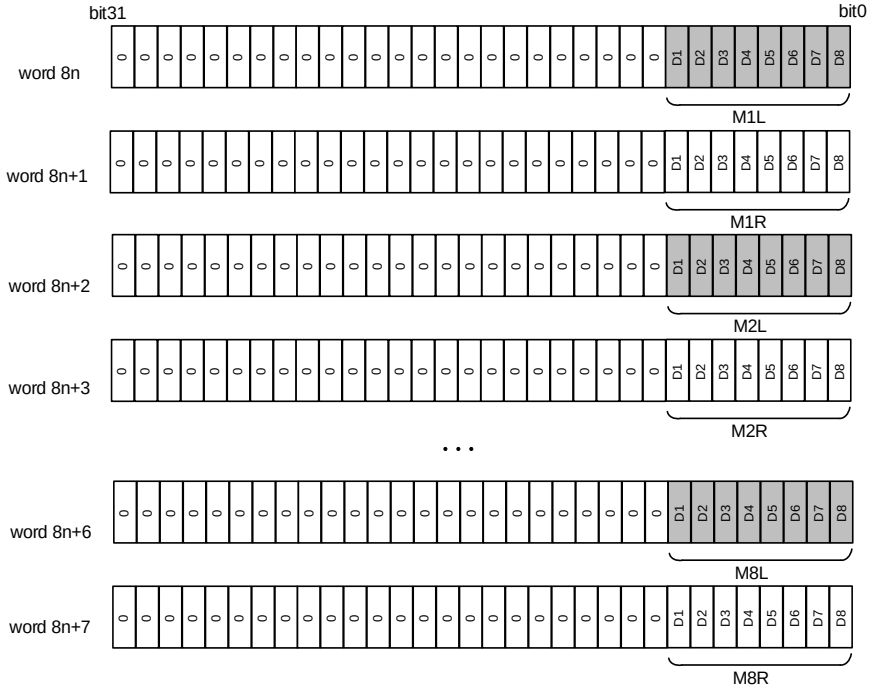

Figure 34-17. Four microphones, under different slot widths, BxDATA register data format

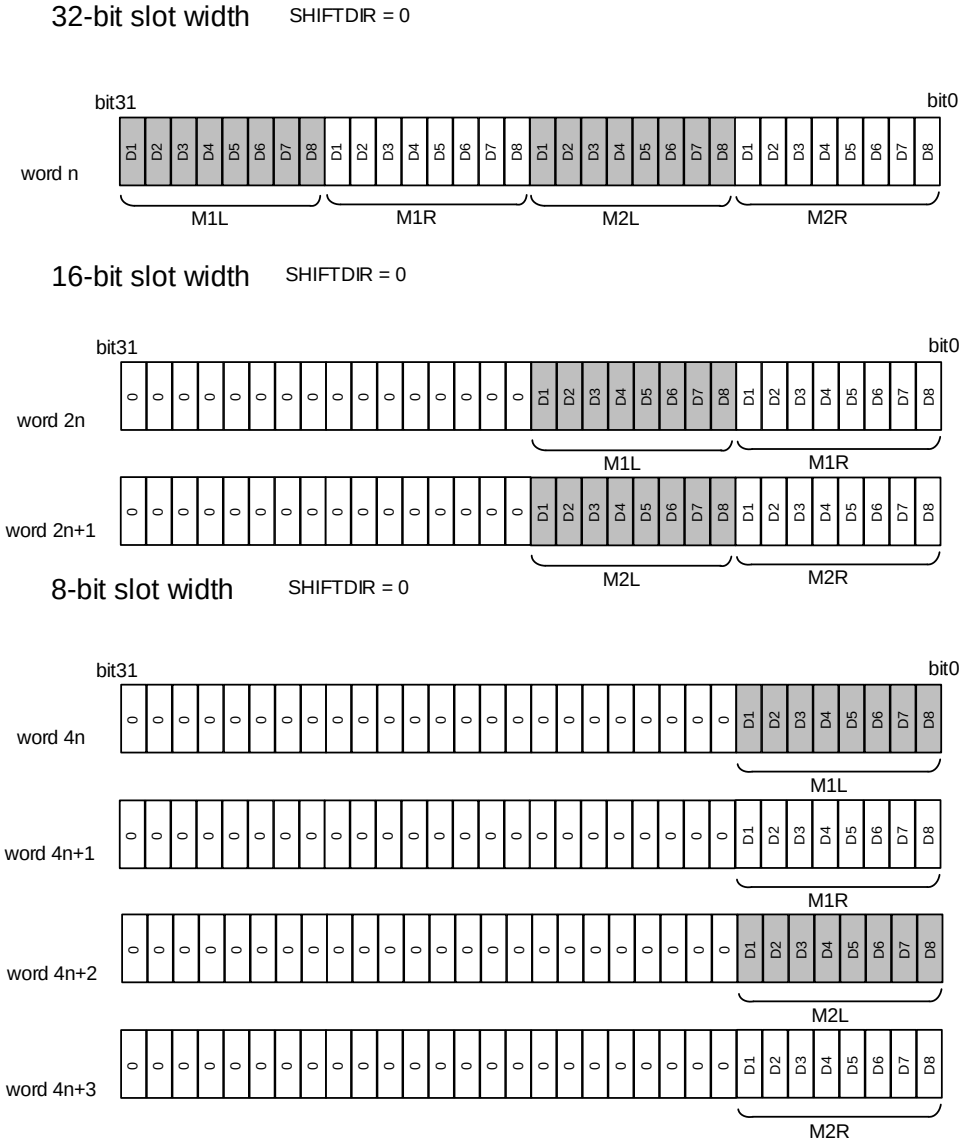

Figure 34-18. Dual microphones, under different slot widths, BxDATA register data

format

Dual microphone configuration

16-bit slot width SHIFTDIR = 0

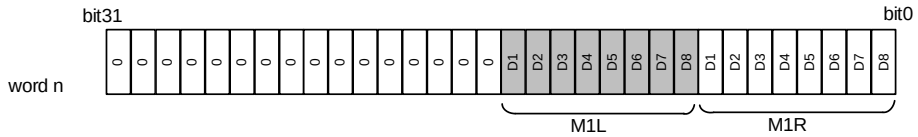

8-bit slot width SHIFTDIR = 0

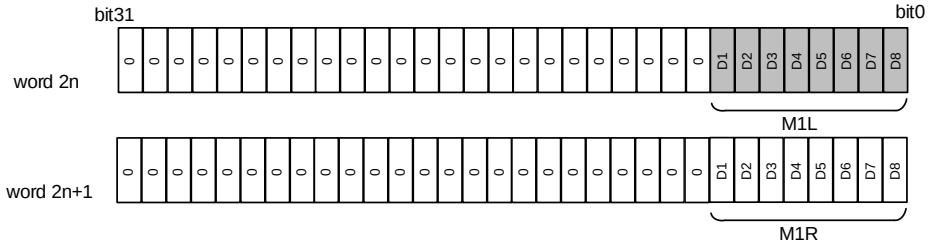

TDM configuration

For the TDM configuration items of the PDM interface, please refer to ***Table 34-5. TDM configuration***.

Table 34-5. TDM configuration

Registers	Bit fields	Values	Descriptions
SAI_B0CFG0	OPTMOD[1:0]	0b01	Mode must be MASTER receiver
	PROT[1:0]	0b00	Polymorphic for TDM
	DATAWD[2:0]	x	Data width.
	SHIFTDIR	x	Data is shifted with MSB or LSB first.
	SAMPEDGE	0	Data is sampled on SCK falling or rising edge.
	MONO	0	Stereo or Mono mode selection.
	BYPASS	1	Clock divider logic bypass.
	MDIV[5:0]	x	Master clock divider ratio.
SAI_B0FCFG	FWD[7:0]	x	Frame width
	FSAWD[6:0]	0	Frame synchronization active width.
	FSFUNC	0	FS only defines frame start.
	FSPL	1	FS high active polarity.
	FSOST	0	FS active edge asserted at the beginning of the first bit of the first slot.
SAI_B0SCFG	DATAOST[4:0]	0	Data offset
	SLOTWD[1:0]	0	Slot width equals' data width
	SLOTNUM[3:0]	x	Slot number within frame
	SLOTAV[15:0]	x	To be adjusted according to SLOTNUM

Note: When configuring PDM, the clock frequency, frame length, and slot size need to comply with the following three requirements:

1. The clock frequency configuration follows the following formula：

$$f_{SCK_B0} = f_{PDM_CLK} * (MICNUMSEL+1) * 2 \quad (34\text{-}4)$$

2. The frame width configuration follows the following formula:

$$FWD = (16 * (MICNUMSEL+1)) - 1 \quad (34\text{-}5)$$

3. Slot width needs to be configured as an integer multiple of (FWD+1).

34.3.10. AC'97 link controller

AC'97 link controller mode is selected via the PROT configuration in the SAI_BxCFG0 register. When this protocol is selected, many of the configuration field are ignored, include data shift direction, data width, most of frame and slot configurations, and part of interrupt control fields. The detail could be seen in the registers definition section.

AC'97 has a constant frame length of 256-bits, divided into 13-slots, the first slot is fixed at 16-bits width, and the rest 12 is fixed at 20-bits wide. User's must set the data width (DATAWD)control filed in the SAI_BxCFG0 register to 16- or 20-bits wide, otherwise the audio sub-block's behavior is not guaranteed.

Bit2 of the TAG (slot 0) is reserved, no matter what value is written into the TAG, bit2 of the send data is 0.

Bit3 to 14 of the TAG (slot 0) act as the slot activation vector (SLOTAV) in free protocol, where the TAG slot (slot 0) is always active, bit3 correspond to slot 12, and bit14 corresponds to slot 1.

Bit15 of the TAG (slot 0) is codec ready status indication, when audio sub-block is configure as receiver, and a TAG received with Bit 15 low, indicate an audio codec not ready (ACNRDY) status, and ACNRDY flag is set accordingly. An interrupt is generated if both ACNRDY flag and audio codec not ready interrupt enable (ACNRDYIE) are both set.

Frame synchronization active edge is asserted 1 clock cycle before the first bit of data, as shown in the ***Figure 34-19 AC'97 slot partition***.

Figure 34-19 AC'97 slot partition

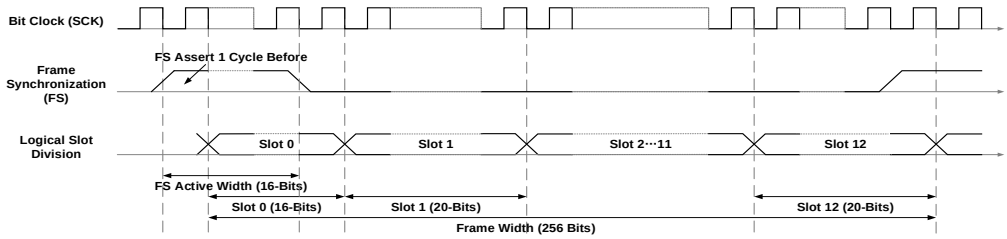

The ***Figure 34-20 AC'97 tag definition*** give an overview of AC'97 slot partition.

Figure 34-20 AC'97 tag definition

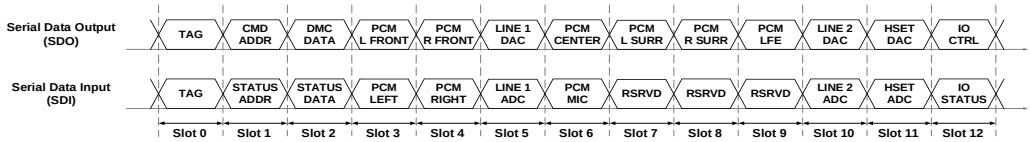

The ***Table 34-6 AC'97 transmitter tag definition*** summarizes each slot's definition and meaning.

When AC'97 link controller acting as transmitter.

Table 34-6 AC'97 transmitter tag definition

Slot	Name	Description
0	SDO TAG	MSBs indicate which slot contain valid data; LSBs convey Codec ID
1	Control CMD ADDR write port	Read/write command bit plus 7-bit Codec register address
2	Control DATA write port	16-bit command register write data
3,4	PCM L&R DAC playback	16-, 18-, 20-bit PCM data for Left and Right channels
5	Modem Line 1 DAC	16-bit modem data for modem line 1 output
6,7,8,9	PCM Center, Surround L&R, LFE	16-, 18-, 20-bit PCM data for Center, Surround L&R, LFE channels
10	Modem Line 2 DAC	16-bit modem data for modem Line 2 output
11	Modem handset DAC	16-bit modem data for modem Handset output
12	Modem IO control	GPIO write port for modem control
10-11	SPDIF Out	Optional AC-link bandwidth for SPDIF output
6-12	Double rate audio	Optional AC-link bandwidth for 88.2 or 96kHz on L, C, R channels. Actual slots used are controlled by the DRSS bits.

When AC'97 link controller acting as receiver.

Table 34-7 AC'97 receiver tag definition

Slot	Name	Description
0	SDI TAG	MSBs indicate witch slots contain valid data
1	STATUS ADDR read port	MSBs echo register address; LSBs indicate which slots request data
2	STATUS DATA read port	16-bit command register read data
3,4	PCM L&R ADC record	16-, 18- or 20-bit PCM data from Left and Right inputs
5	Modem Line 1 ADC	16-bit modem data from modem Line 1 input
6	Dedicated Microphone ADC	16-, 18- or 20-bit PCM data from output 3rdADC input
7,8,9	Vendor reserved	Vendor specific (enhanced input for docking, array mic, etc.)
10	Modem Line 2 ADC	16-bit modem data from modem Line 2 input
11	Modem handset input ADC	16-bit modem data form modem Handset input

12	Modem IO status	GPIO read port for modem status

34.3.11. SPDIF Output

SPDIF (Sony/Philips Digital Interface) is a type of digital audio interconnect used in consumer audio equipment to output audio over reasonably short distances. SPDIF is standardized in IEC 60958.

Figure 34-21 SPDIF data formate shows SPDIF block formate and sub_frame formate.

Figure 34-21 SPDIF data formate

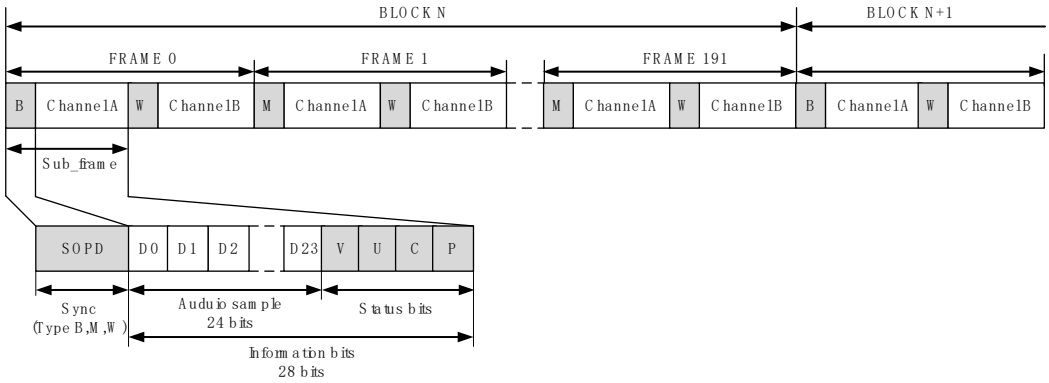

Each SPDIF block contains 192 frames of data, and each frame is composed of a left channel subframe (32 bits) and a right channel subframe (32 bits). Each subframe is composed of 4bit SOPD mode, 24bit data information and 4bit status information.

SOPD mode coding reference *Table 34-8. SOPD mode*

Table 34-8. SOPD mode

Preceding state	0	1	Description
Preamble	Channel coding		
B	11101000	00010111	Channel A data at the start of block
W	11100100	00011011	Channel B data at somewhere in the block
M	11100010	00011101	Channel A data

The data filling of SPDIF data transmission in the SAI_BxDATA register should follow: SAI_BxDATA[26:24] contains the channel status bit, user bit and validity bit, SAI_BxDATA[23:0] contains the 24-bit data of the channel under consideration.

Note: If the data size is 20/16 bits, the data should be mapped to SAI_BxDATA[23:4] / SAI_BxDATA [23:8].

By configuring the OPTMOD[1] bit in the SAI_BxCFG0 register to 0, the master mode is forced to be selected. At the same time, the DATAWD[2:0] data bit width setting in the SAI_BxCFG0 register will be ignored and forced to be set to 24 bits. The symbol rate is configured through the clock generator. And encoded through the Manchester protocol.

The SAI first sends the adequate preamble for each sub-frame in a block. The SAI_BxDATA

is then sent on the SD line (manchester coded). The SAI ends the sub-frame by transferring the Parity bit calculated as described in *Table 34-9 Parity bit calculation*.

Table 34-9 Parity bit calculation

SAI_BxDATA [26:0]	Parity bit P value transferred
Odd number of 0	0
Odd number of 1	1

For the SPDIF generator, the SAI shall provide a bit clock equal to twice of the symbol-rate.

More generally, the relationship between the audio sampling rate (FS) and the bit-clock rate (FSCK_x) is given by the formula：

$$F_s = \frac{F_{SCK_x}}{128} \quad (34\text{-}6)$$

The bit clock rate is obtained as follows:

$$F_{SCK_x} = \frac{F_{SAI_CK_x}}{MDIV} \quad (34\text{-}7)$$

Note: The above formulas are valid only if BYPASS is set to 1 in SAI_BxCFG0.

34.3.12. Stereo/Mono

The SAI audio sub-block could be switched between stereo mode and mono mode by the MONO configuration in SAI_BxCFG0 register, note that when mono mode is selected, slot number must be configured to 2, else the audio sub-block behavior is not guaranteed.

When the audio sub-block is configured as transmitter, data sent during the first slot (slot 0) will be duplicated to the second slot (slot 1), in this case, the FIFO is access half as much as in stereo mode.

When the audio sub-block is configured as receiver, data received during the first slot is pushed into the FIFO, and data received during the second slot is discarded.

34.3.13. Mute

Users could set the mute property anywhere during an on-going frame through the MT bit in the SAI_BxCFG1 register, but mute will only take effect on the state of the next frame.

When the SAI audio sub-block is configured as transmitter and mute is configured, data is still read from the FIFO, put into the shift register as usual when mute take effect at next frame, the only difference is that the SD output if forced to a specific value determined by the mute value (MTVAL) configuration also located in the SAI_BxCFG1 register. When MTVALis set to 0, a 0 value is forced on the SD output during a mute frame. On the contrary, when MTVAL is set to 1, SD output behavior is further depended upon the slot number (SLOTNUM) configuration. When slot number is less or equals to 2, frame contents transmitted before mute active is repeated in mute frames. When slot number is greater than 2, SD output is

forced to 0.

SAI audio sub-block that is configured in receiver mode could detect mute frame and generate interrupt accordingly. A mute frame counter is implemented in each audio sub block, a frame received with each active slot's data equals to 0 will be regarded as a mute frame, and the internal mute frame counter is incremented. This mute frame counter is reset when SAI audio sub-block is disabled or when a frame is not a mute frame. If the number of successive mute frame received amount to a number equals to the mute frame count (MTFCNT) settings in the SAI_BxCFG1 register, the mute detection flag (MTDET) will be set in the SAI_BxSTAT register, and an interrupt is generated if mute detection interrupt enable (MTDETIE) is turned on in the SAI_BxINTEN register.

Mute frame activation is shown in the ***Figure 34-22 Mute frame activation***.

Figure 34-22 Mute frame activation

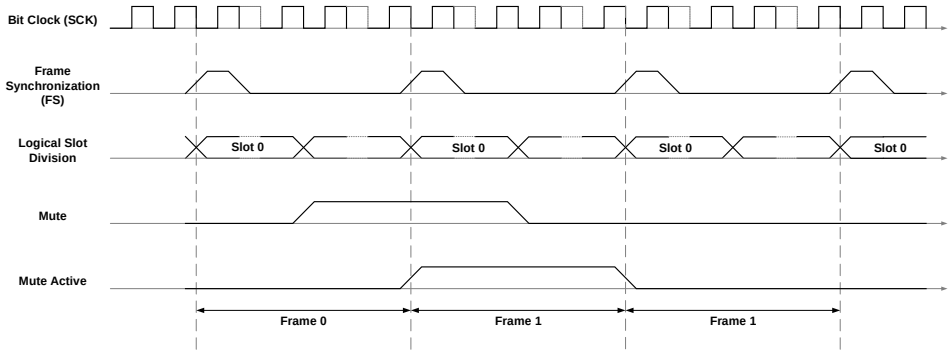

SD output behavior under different configuration is summarized in the ***Table 34-10 Mute frame composition***.

Table 34-10 Mute frame composition

Slot Number	Mute Value = 1	Mute Value = 0
≤ 2	Frame before Mute active is repeated on SD Output	Forced to 0
>2	Forced to 0	Forced to 0

34.3.14. Compander

Compander is simply a system in which information is first compressed, transmitted through a bandwidth limited channel, and expanded in the receiving end. It is frequently used to reduce the bandwidth requirement for transmitting telephone quality speech, by reducing the 13-bitto 8-bit code words. Two international standards for encoding signal data to 8-bit codes are A-law and Mu-law. A-law is the accepted European standard, while Mu-law is the accepted standard in the United States and Japan.

Both A-law and Mu-law in implemented by the SAI, its configuration is located in the SAI_BxCFG1 register. The audio sub-block chooses between compressing and expanding according to the operating mode (OPTMOD). When the audio sub-block is configured as transmitter, compressing is selected. On the contrary, when configured as receiver, expanding

mode is choose. Users can select between 1's or 2's complement as their default data representation as long as he has informed the SAI of his choice through the complement mode (CPLMOD) configuration in SAI_BxCFG1 register. In transmitter mode, no matter what compander mode is selected, the hardware first convert the complement representation to signed magnitude representation, and the feed into the compander. While in receiver mode, the linear output data is converted form sign-magnitude to complement representation, and then stored in the FIFO.

Figure 34-23 Compander data path

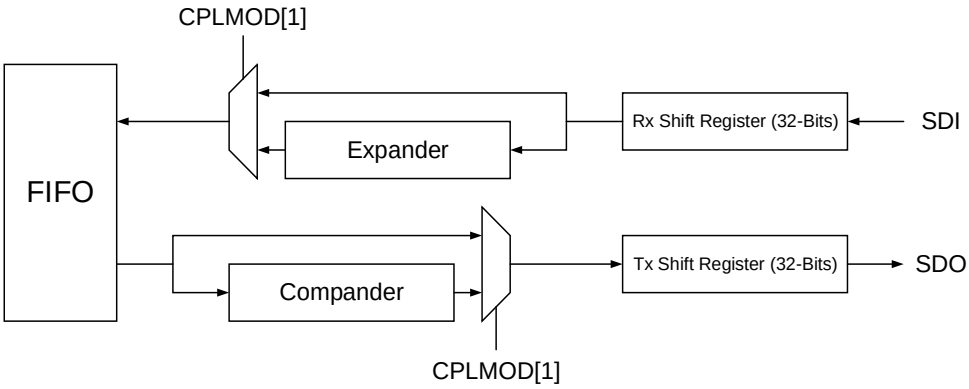

A-law compander

A-law is the CCITT recommended companding standard used across Europe, Limiting the linear sample values to 12 magnitude bits. The following chart illustrates the A-law encoding algorithm, the linear input data is in the signed-magnitude representation, with S representing the sign, and the following 12-bit representing the magnitude. The encoded output is 8-bit wide, with MSB representing the sign, not the sign bit S on both side of the ***Table 34-11 A-law encoding*** take on the same value. A, B, C, and D takes on the value of 0 or 1, and X represent don't cares.

Table 34-11 A-law encoding

Linear Input Data													A-law Encoded Output							
S	0	0	0	0	0	0	0	A	B	C	D	X	S	0	0	0	A	B	C	D
S	0	0	0	0	0	0	1	A	B	C	D	X	S	0	0	1	A	B	C	D
S	0	0	0	0	0	1	A	B	C	D	X	X	S	0	1	0	A	B	C	D
S	0	0	0	0	1	A	B	C	D	X	X	X	S	0	1	1	A	B	C	D
S	0	0	0	1	A	B	C	D	X	X	X	X	S	1	0	0	A	B	C	D
S	0	0	1	A	B	C	D	X	X	X	X	X	S	1	0	1	A	B	C	D
S	0	1	A	B	C	D	X	X	X	X	X	X	S	1	1	0	A	B	C	D
S	1	A	B	C	D	X	X	X	X	X	X	X	S	1	1	1	A	B	C	D

After the input data is encoded through the logic defined in the table, an inversion pattern is applied to the 8-bit code to increase the density of transitions on the transmission line, a benefit to hardware performance. The inversion pattern is applied by XOR'ing the 8-bit code with 0x55.

Decoding the A-law encoded data is essentially a matter of reversing the steps in the encoding. The ***Table 34-12 A-law decoding*** illustrate the A-law decoding algorithm, applied after reversing the inversion pattern. The least significant bits discarded in the encoding process are approximated by the median value of the interval. This is shown in the output section by the trailing 1...0 pattern after the D bit.

Table 34-12 A-law decoding

A-law Encoded Input								Linear Output data												
S	0	0	0	A	B	C	D	S	0	0	0	0	0	0	0	A	B	C	D	1
S	0	0	1	A	B	C	D	S	0	0	0	0	0	0	1	A	B	C	D	1
S	0	1	0	A	B	C	D	S	0	0	0	0	0	1	A	B	C	D	1	0
S	0	1	1	A	B	C	D	S	0	0	0	0	1	A	B	C	D	1	0	0
S	1	0	0	A	B	C	D	S	0	0	0	1	A	B	C	D	1	0	0	0
S	1	0	1	A	B	C	D	S	0	0	1	A	B	C	D	1	0	0	0	0
S	1	1	0	A	B	C	D	S	0	1	A	B	C	D	0	0	0	0	0	0
S	1	1	1	A	B	C	D	S	1	A	B	C	D	1	0	0	0	0	0	0

Mu-Law compander

The Unite States and Japan use the Mu-law companding, limiting the linear sample value to 13 magnitude bits. The encoding and decoding process for Mu-law is similar to A-law. There are, however, a few notable differences:

1. Mu-law encoders typically operate on 13-bit magnitude data, as opposed to 12-bit magnitude data with A-law.
2. Before chord determination a bias value of 33 is added to the absolute value of the linear input data to simplify the chord and step calculations.
3. The definition of sign bit is reversed, that is, input and output sign bit takes on the opposite sign.
4. The inversion pattern is applied to all bits in the 8-bit code.

The ***Table 34-13 Mu-law encoding*** illustrate Mu-law encoding algorithm. The sign bit S of the linear input data takes on the opposite value from the sign bit of the encode data.

Table 34-13 Mu-law encoding

Linear Input Data														Mu-law Encoded output							
S	0	0	0	0	0	0	0	1	A	B	C	D	X	~S	0	0	0	A	B	C	D
S	0	0	0	0	0	0	1	A	B	C	D	X	X	~S	0	0	1	A	B	C	D
S	0	0	0	0	0	1	A	B	C	D	X	X	X	~S	0	1	0	A	B	C	D
S	0	0	0	0	1	A	B	C	D	X	X	X	X	~S	0	1	1	A	B	C	D
S	0	0	0	1	A	B	C	D	X	X	X	X	X	~S	1	0	0	A	B	C	D
S	0	0	1	A	B	C	D	X	X	X	X	X	X	~S	1	0	1	A	B	C	D
S	0	1	A	B	C	D	X	X	X	X	X	X	X	~S	1	1	0	A	B	C	D
S	1	A	B	C	D	X	X	X	X	X	X	X	X	~S	1	1	1	A	B	C	D

After the input data is encoded through the algorithm defined in the chart, an inversion pattern

is applied to the 8-bit code to increase the density of the transmission line, a benefit to the hardware performance. The inversion pattern is applied by XOR'ing the 8 bit code with 0xFF.

Decoding the Mu-law is essentially a matter of reversing the steps in the encoding. The ***Table 34-14 Mu-law decoding*** illustrates the Mu-law decoding process, applied after reversing the inversion pattern. The least significant bits discarded in the encoding process are approximated by the median value of the interval. This is shown in the output section by the trailing 1…0 pattern after the D bit.

Table 34-14 Mu-law decoding

Mu-law Encoded Input								Linear Output Data													
S	0	0	0	A	B	C	D	~S	0	0	0	0	0	0	0	1	A	B	C	D	1
S	0	0	1	A	B	C	D	~S	0	0	0	0	0	0	1	A	B	C	D	1	0
S	0	1	0	A	B	C	D	~S	0	0	0	0	0	1	A	B	C	D	1	0	0
S	0	1	1	A	B	C	D	~S	0	0	0	0	1	A	B	C	D	1	0	0	0
S	1	0	0	A	B	C	D	~S	0	0	0	1	A	B	C	D	1	0	0	0	0
S	1	0	1	A	B	C	D	~S	0	0	1	A	B	C	D	1	0	0	0	0	0
S	1	1	0	A	B	C	D	~S	0	1	A	B	C	D	1	0	0	0	0	0	0
S	1	1	1	A	B	C	D	~S	1	A	B	C	D	0	0	0	0	0	0	0	0

34.3.15. Output drive

SAI can drive each audio sub-block's frame synchronization (FS), serial clock (SCK), and serial data (SD) independently of SAI enable status through the configuration of output drive (ODRIV) in SAI_BxCFG0 register.

Output drive settings must be programmed after SAI register configuration and before SAI is enabled.

34.3.16. IO management

IO management module is connected to both SAI audio sub-blocks, it is the only medium where they are connected. When audio sub-block is configured synchronous with the other sub-block through the synchronization mode (SYNCMOD) bit in SAI_BxCFG0 register, FS, SCK and MCLK pin could be shared, those pins of the synchronous sub-block are freed and left as general purpose IOs. When one audio sub-block is declared synchronous to the other audio block, it must be configure as slave.

This function is especially useful in duplex mode, where one sub-block act as transmitter, while the other act as receiver, the synchronous sub-block receive its FS and SCK signal through the IO management module, which comes from the asynchronous module if it is declared as master or from external IO if it is declared as slave.

34.3.17. DMA interface

Each SAI audio sub-block has its own DMA interface. DMA access is enable through DMA enable (DMAEN) bit in the SAI_BxCFG0 register. DMA request is generated together with FIFO request (FFREQ), whose status depend on FIFO threshold (FFTH) and FIFO status (FFSTAT), this is especially important when DMA burst transaction is used. When the audio sub-block is configured in transmitter mode, FIFO threshold must be set to a value such that enough empty space is left for a complete DMA burst write operation in the worst case, otherwise FIFO overrun might occur. When the audio sub-block is configured in receiver mode, FIFO threshold must be set to a value such that enough data in the FIFO of a complete DMA burst read operation to avoid FIFO underrun condition.

DMA direction is linked to the audio sub-block operating configuration. When configured as transmitter, the DMA request a data load to the internal FIFO by writing the data register SAI_BxDATA. When configured as receiver, the DMA request a data read from the internal FIFO by reading the data register SAI_BxDATA.

Note: DAM SAI channel must be enabled after SAI register configuration.

34.3.18. Enable/Disable

SAI audio sub-block is enabled through the SAIEN bit in the SAI_BxCFG0 register, users must ensure this is done after the audio sub-block is configured, on-the-fly configuration is not supported, if done so, hardware′s behavior is not guaranteed. Slave audio sub-block must be enabled before master audio block.

Users can disable the audio sub-block anywhere during an active frame transfer, but it will only be completely disabled at the end of current frame.

34.3.19. Error flags

Clock error configuration detection

Clock error configuration detection mechanism in enabled only when the audio sub-block is configured as master and clock divider bypass (BYPASS) is clear. In this operating mode, users have to guarantee that the frame length (FWD+1) equals the results of an exponential function of base 2 within 8- and 256-bits range, otherwise the clock error flag (ERRCK) will be set in the status register SAI_BxSTAT. The frame length must be a power of 2 is to ensure there is an integer number of master clock (MCLK) cycles within each bit clock cycle (SCK), for better sound quality.

An interrupt is generated if the clock error configuration detection interrupt enable (ERRCKIE) bit in the interrupt enable register SAI_BxINTEN is set.

When Clock error is detected, it automatically disables the audio sub-block via clearing the SAIEN in the SAI_BxCFG0 register.

Audio codec not ready detection

Audio codec not ready status is checked only when AC'97 protocol is used and receiver operating condition is choose. The audio sub-block determines audio codec ready status form the TAG (the first slot). When bit 15 of the TAG is 0, audio codec not ready flag (ACNRDY) in the status register SAI_BxSTAT is set, an interrupt is generated if audio codec not ready interrupt enable (ACNRDYIE) in the interrupt enable register SAI_BxINTEN is set. When codec not ready is detected, data contained in the following slots of the current frame will not be loaded into the FIFO.

Audio codec not ready detected flag is clear by setting the audio codec not ready detected clear (ACNRDYC) bit in the SAI_BxINTC register.

Frame synchronization advanced detection

Frame synchronization advanced detection mechanism is enabled only when the audio sub-block is configured as a slave, since salve receives the FS signal, and its arrival time is crucial to correct data interpretation. Frame synchronization advanced detection is possible because frame length, frame active polarity and frame offset are determine before audio sub-block enabled.

Frame synchronization advancement has no effect on the current frame since FS active edge is only anticipated at the end of the frame.

An interrupt is generated when both frame synchronization advanced detected flag (FSADET) in status register SAI_BxSTAT and frame synchronization advanced detection interrupt enable in interrupt enable SAI_BxINTEN register are set.

To resynchronize, the following steps are needed:

1. Audio sub-block should be disabled, users must wait for the SAIEN control field of the corresponding sub-block is completely disabled.
2. The internal FIFO should be flushed by setting the FLUSH control field.
3. Enable the audio sub-block again by setting SAIEN.
4. Wait for FS to restart synchronization.

Note: This flat is not generated in AC'97 configuration mode. Since AC'97 is only a link controller, FS is generated even if the audio sub-block is configured as a slave.

Figure 34-24 Frame synchronization advanced detection

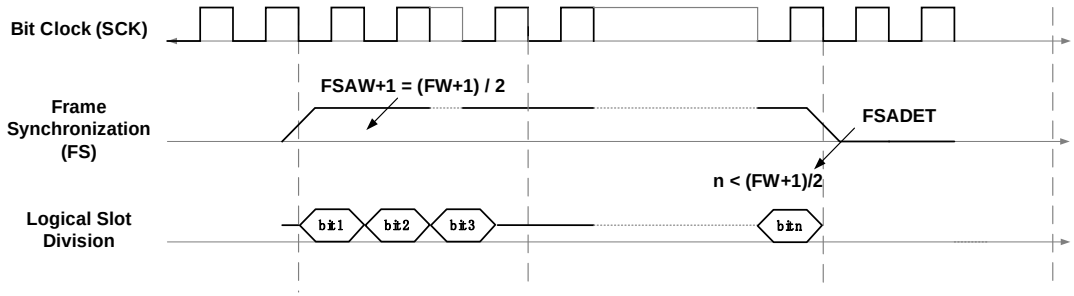

Frame synchronization postponed detection

Frame synchronization postponed detected mechanism is enabled only when the audio sub-block is configured as a slave, since the salve receives the FS signal, and its arrival time is crucial to correct data interpretation. Frame synchronization postpone detection is possible because frame length, frame active polarity and frame offset are determined before audio sub-block is enabled.

Frame synchronization postpone might be caused by late generation of the master device, external delay or noise induced glitches. This incorrect FS timing could disrupt audio sub-block's internal finite state machine, thus corrupting correct transactions.

An interrupt is generated when both frame synchronization postpone detected flag (FSPDET) in status register SAI_BxSTAT and frame synchronization postponed interrupt enable in interrupt enable SAI_BxINTEN register are set.

To resynchronize with the master, the steps for resynchronization should be applied.

Note: This flat is not generated in AC'97 configuration mode. Since AC'97 is only a link controller, FS is generated even if the audio sub-block is configured as a slave.

Figure 34-25 Frame synchronization postponed detection

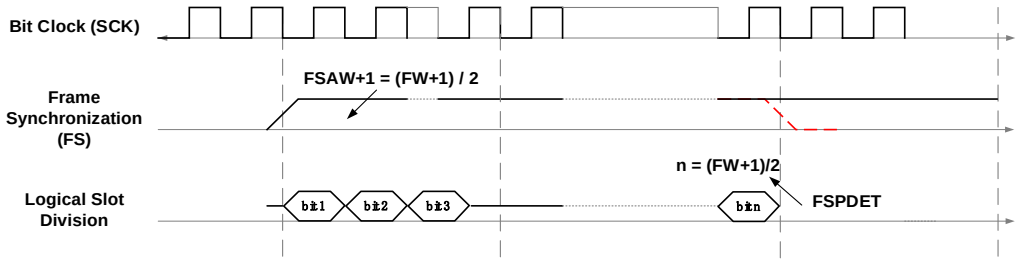

FIFO overrun or underrun detection

FIFO overrun and underrun flag (OUERR) ccupies the same bit in status register SAI_BxSTAT since each audio sub-block can be configured into either transmitter or receiver.

When the audio sub-block is configures as transmitter, underrun can happen during an active frame transaction when FIFO is empty and a new slot of empty data is sent. An interrupt is generated if the overrun or underrun interrupt enable (OUERRIE) in the interrupt enable register SAI_BxINTEN is set. If underrun happens, a re-synchronization procedure is showed in the following steps:

1. Audio sub-block should be disabled, users must wait until SAIEN control field of the corresponding sub-block is completely disabled.
2. The internal FIFO should be flushed by setting the FLUSH control field.
3. Fill the correct data to be transferred in into the FIFO.
4. Enable the audio sub-block again by setting SAIEN.

Underrun flag is cleared by setting the overrun or underrun clear (OUERRC) bit in the interrupt

clear register SAI_BxINTC.

When the audio sub-block is configured as receiver, overrun can happen during an active frame transaction when FIFO is full and a new slot of data is received. When overrun happens, the newly received data is discarded, nothing will be written into the FIFO. An interrupt is generated if the overrun or underrun interrupt enable (OUERRIE) in the interrupt enable register SAI_BxINTEN is set.

Overrun flag is also cleared by setting the OUERRC bit in the SAI_BxINTC register.

Note: When DMA is enabled, users have to guarantee correct DMA configuration, especially if DMA burst is used, otherwise overrun and underrun can both happen in transmitter or receiver operating mode.

34.3.20. Interrupts

The ***Table 34-15 Interrupt control*** summarizes all the interrupt sources present in each audio sub-block.

Table 34-15 Interrupt control

Interrupt source	Interrupt partition	Interrupt raise condition	Interrupt Enable Control	Interrupt Clear Control
FFREQ	Request	OPTMOD = Any	FFREQIE	Read/Write SAI_BxDATA
MTDET	Mute	OPTMOD = Receiver	MTDETIE	MTDETC
ERRCK	Error	OPTMOD = Master; BYPASS = 1	ERRCKIE	ERRCKC
ACNRDY	Error	OPTMOD = Slave; PROT = AC'97	ACNRDYIE	ACNRDYC
FSADET	Error	OPTMOD = Slave; PROT ≠AC'97	FSADETIE	FSADETC
FSPDET	Error	OPTMOD = Slave; PROT ≠AC'97	FSPDETIE	FSPDETC
OUERR	Error	OPTMOD = Any	OUERRRIE	OUERRC

To recover from error interrupt, the following procedure should be applied:

1. Disable the corresponding interrupt.
2. Configure SAI function registers.
3. Enable interrupt.
4. Enable SAI audio sub-block.

34.4. Register definition

SAI0 base address: 0x4001 5800

SAI1 base address: 0x4001 5C00

SAI2 base address: 0x4001 6000

34.4.1. Synchronize configuration register (SAI_SYNCFG)

Address offset: 0x00

Reset value: 0x0000 0000

This register has to be accessed by word (32-bit).

31	30	29	28	27	26	25	24	23	22	21	20	19	18	17	16
Reserved															

15	14	13	12	11	10	9	8	7	6	5	4	3	2	1	0
Reserved										SYNO[1:0]		Reserved		SYNI[1:0]	
										rw				rw	

Bits	Fields	Descriptions
31:6	Reserved	Must be kept at reset value.
5:4	SYNO[1:0]	Synchronization outputs 00: No synchronization output signals. 01: Block 0 used for further synchronization for others SAI 10: Block 1 used for further synchronization for others SAI 11: Reserved. These bits must be set when both audio block (0 and 1) are disabled. **Note:** SYNO[1:0] should be configured as No synchronization output signals when audio block is configured as SPDIF.
3:2	Reserved	Must be kept at reset value.
1:0	SYNI[1:0]	Synchronization inputs. Refer to ***Table 34-2. External synchronization configuration***. They are meaningful if one of the two audio blocks is defined to operate in synchronous mode with an external SAI (SYNCMOD[1:0] = 10 in SAI_BxCFG0).

34.4.2. Block x configuration register0 (SAI_BxCFG0) (x = 0,1)

Address offset: 0x04 + 0x20 * x

Reset value: 0x0000 0040

This register has to be accessed by word (32-bit).

31	30	29	28	27	26	25	24	23	22	21	20	19	18	17	16
Reserved				MCLKEN	MOSPR	MDIV[5:0]						BYPASS	Reserved	DMAEN	SAIEN

				rw	rw				rw			rw		rw	rw
15	14	13	12	11	10	9	8	7	6	5	4	3	2	1	0
Reserved		ODRIV	MONO	SYNCMOD[1:0]		SAMPEDGE	SHIFTDIR	DATAWD[2:0]			Reserved	PROT[1:0]		OPTMOD[1:0]	
		rw	rw	rw		rw	rw	rw				rw		rw	

Bits	Fields	Descriptions
31:28	Reserved	Must be kept at reset value.
27	MCLKEN	The master clock enable 0: The master clock is enable 1: The master clock is enabled independently of SAIEN bit
26	MOSPR	The master clock oversampling rate. 0: MCLK = 256 * F_{fs} 1: MCLK = 512 *F_{fs}
25:20	MDIV[5:0]	Master clock divider ratio. 0000: Primary frequency divider logic bypass, Otherwise, please refer to formula 30-1 in chapter ***Clock divider*** for output frequency calculation by the formula **Note**: This control field is ineffective when SAI configured in slave mode. **Note**: This control field has to be set before SAI is enabled.
19	BYPASS	Clock divider logic bypass. 0: Clock divider ratio is applied to both primary and secondary divider logic. 1: Clock divider logic is bypassed.
18	Reserved	Must be kept at reset value.
17	DMAEN	DMA enable. 0: DMA disabled 1: DMA enabled **Note**: DMAEN must be set after OPTMOD control field if SAI is configured as receiver to avoid unnecessary DMA request, since SAI is transmitter after reset.
16	SAIEN	SAI sub-block enable. 0: SAI sub-block is disabled. 1: SAI sub-block is enabled, this control field can only be set when SAIEN is 0. **Note**: The SAI sub-block is completely disabled (SAIEN read as 0) only at the end of the current frame if software has already issued a disabled request somewhere during the on-going transfer. **Note**: SAI slave must be enabled before SAI master.
15:14	Reserved	Must be kept at reset value.
13	ODRIV	Output Drive. 0: SAI sub-block output driven only when SAIEN is set.

		1: SAI sub-block output driven according to ODRIV setting. **Note**: This control field has to be set after SAI configuration but before SAI sub-block enabled.
12	MONO	Stereo and Mono mode selection. 0: Stereo mode. 1: Mono mode. Mono mode requires slot number equals to 2, in transmitter mode, the first slots data is copied to the second slot, while in receiver mode, the second slot's data is ignored.
11:10	SYNCMOD[1:0]	Synchronization mode. 00: Asynchronous with the other sub-block. 01: Synchronous with the other sub-block, when this mode is selected, users must configure the operating mode to slave. 10: Synchronous with an external SAI audio sub-block, when this mode is selected, users must configure the operating mode to slave. 11: Reserved. **Note**: It is required to be configured when audio sub-block is disabled. **Note**: If the protocol select as SPDIF, the mode should be configured as asynchronous.
9	SAMPEDGE	Sampling clock edge. 0: Data sampled on SCK falling edge. 1: Data sampled on SCK rising edge. **Note**: This control field is ignored in SPDIF mode. **Note**: It is required to be configured when audio sub-block is disabled.
8	SHIFTDIR	Shift direction. 0: Data is shifted with MSB first. 1: Data is shifted with LSB first. **Note**: This control field is ignored in AC'97 mode, since shift direction is forced to MSB first.
7:5	DATAWD[2:0]	Data width. 000: Reserved. 001: Reserved. 010: 8-bits wide 011: 10-bits wide. 100: 16-bits wide. 101: 20-bits wide. 110: 24-bits wide. 111: 32-bits wide. In compander mode, data width is fix to 8-bits width by the algorithm itself. **Note**: It is required to be configured when audio sub-block is disabled. **Note**: This control field is ignored in SPDIF mode.

		Note: In case AC'97 protocol is selected, only 16- or 20-bits is viable, otherwise audio sub-block's behavior is not guaranteed.
4	Reserved	Must be kept at reset value.
3:2	PROT[1:0]	Protocol selection. 00: Polymorphic. 01: SPDIF. 10: AC'97. 10: Reserved. Polymorphic configuration allows the user to tweak with all the frame and slot configuration options to form his protocol of choice suck as I2S, LSB/MSB justified, TDM, PCM/DSP and so on. **Note**: It is required to be configured when audio sub-block is disabled.
1:0	OPTMOD[1:0]	Operating mode. 00: Master transmitter. 01: Master receiver. 10: Slave transmitter. 11: Slave receiver. If the protocol select as SPDIF, the operating mode will be forced to configure as master transmitter. **Note**: It is required to be configured when audio sub-block is disabled.

34.4.3. Block x configuration register1 (SAI_BxCFG1) (x = 0,1)

Address offset: 0x08 + 0x20 * x

Reset value: 0x0000 0000

This register has to be accessed by word (32-bit).

31	30	29	28	27	26	25	24	23	22	21	20	19	18	17	16
Reserved															

15	14	13	12	11	10	9	8	7	6	5	4	3	2	1	0
CPAMOD[1:0]		CPLMOD	MTFCNT[5:0]						MTVAL	MT	SDOM	FLUSH	FFTH[2:0]		
rw		rw	rw						rw	rw	rw	rw	rw		

Bits	Fields	Descriptions
31:16	Reserved	Must be kept at reset value.
15:14	CPAMOD[1:0]	Compander mode. 00: No compansion applied. 01: Reserved. 10: Mu-law algorithm. 11: A-law algorithm. ITU-T G.711 defines two main compansion algorithm, the Mu-law and A-law, which

		encode 13- and 12-bits signed linear PCM respectively to logarithmic 8-bit samples. The former gives more resolution to higher range signals while the later provides more quantization levels at lower signal levels. The compression or expansion mode is selected via control field OPTMOD[0], when the audio sub-block is configured as transmitter, compression is automatically applied, while expansion is performed when configured as receiver. The complement mode is selected via control field CPLMOD. **Note**: Compansion should be applied when TDM protocol is configured.
13	CPLMOD	Complement mode. This control field is used to select the complement option in compansion mode. 0: Data represented in 1's complement form. 1: Data represented in 2's complement form.
12:7	MTFCNT[5:0]	Mute frame count. This control field is only used in reception mode. When the number of consecutive mute frame received equals to MTFCNT, MTFDET flag is set and an interrupt is generated if MTFDETIE is set.
6	MTVAL	Mute value. 0: 0 is sent via the Serial Data (SD) line when mute is on. 1: If SLOTNUM is less or equals to two, last frame is sent via the Serial Data (SD) line when mute is on, Otherwise 0 is sent via the Serial Data (SD) line in mute frames. **Note**: This control field is meaningful only when the audio sub-block is configured as transmitter, and is ignored in SPDIF mode. **Note**: The receiver can only detect 0 valued mute frame, when MTVAL set to 1 and the last frame is repeatedly sent during the mute, the receiver will receive the data as it is, the mute frame counter will not amount, and so no MTDET flag will ever be set.
5	MT	Mute. 0: Mute mode on 1: Mute mode off. Note: This control field is meaningful only when the audio sub-block is configured as transmitter, SD output is determined by MTVAL when Mute is on. Note: Mute will take effect at next frame if mute is set somewhere inside the on-going frame.
4	SDOM	Serial data output management. 0: SD output is driven entirely during the audio frame. 1: SD output is released near inactive slots. **Note**: If the data offset of the first slot of the first frame is not equals to zero, SD will remain released until the first active data bit. If the current frame is not the first frame of a continuous transfer, whether the offset section of the first slot is released or not depends on the last slot of the previous frame. If the last slot is active, then

		the offset section is driven, otherwise it is released. **Note**: If data offset plus data width is still lower than the slot width, than the space between the last bit of data and the end of slot is known as the empty section. SD output could be released during the empty section depends on whether the following slot is active, if the current slot is the last slot, then its empty section behavior depends on the first slot of current frame, it is independent on whether the current frame is the last frame. **Note**: Whether SD outputs is driven or not on the empty section precede a slot and the offset section followed by a slot is determined by that slot only, if that slot is active, the SD line will be driven, otherwise it will be released.
3	FLUSH	FIFO flush. 0: No FIFO flush. 1: Perform FIFO flush. **Note**: FIFO flush clears all data content inside the FIFO and reset read/write pointers. FIFO flush should be performed when SAI is disabled.
2:0	FFTH[2:0]	FIFO threshold. 000: FIFO empty. 001: FIFO quarter full. 010: FIFO half full. 011: FIFO three quarter full. 100: FIFO full. 101: Reserved. 110: Reserved. 111: Reserved. **Note**: FIFO threshold is used in conjunction with FIFO status (FFSTAT) control field to determine FIFO request (FFREQ) is CPU and DMA mode.

34.4.4. Block x frame configuration register (SAI_BxFCFG) (x = 0,1)

Address offset: 0x0C + 0x20 * x

Reset value: 0x0000 0007

This register has to be accessed by word (32-bit).

31	30	29	28	27	26	25	24	23	22	21	20	19	18	17	16
Reserved													FSOST	FSPL	FSFUNC
													rw	rw	rw

15	14	13	12	11	10	9	8	7	6	5	4	3	2	1	0
Reserved	FSAWD[6:0]							FWD[7:0]							
	rw							rw							

Bits	Fields	Descriptions
31:19	Reserved	Must be kept at reset value.

18	FSOST	Frame synchronization offset. 0: FS active edge asserted at the beginning of the first bit of the first slot. 1: FS active edge asserted one bit cycle before normal FS when FSOST is 0. **Note**: This control field must be configured before the audio sub-block is enabled, and it is meaningless when protocol is set to AC'97 or SPDIF.
17	FSPL	Frame synchronization active polarity. 0: FS low active polarity 1: FS high active polarity. **Note**: This control field must be configured before the audio sub-block is enabled, and it is meaningless when protocol is set to AC'97 or SPDIF.
16	FSFUNC	Frame synchronization function. 0: FS only defines frame start. 1: FS define both frame start and channel number. **Note**: This control field must be configured before the audio sub-block is enabled. **Note**: When FSFUNC is set, slot number (SLOTNUM + 1) within a frame must be even, in this case half of the slot will be allocated to channel A, the other half to channel B. If the combination of all slots allocated to one channel is smaller than half the frame width, SD output will be release where slot is undefined, independent of SDOM. **Note**: When FSFUNC is set, FS active width (FSAWD + 1) must be configure as half the length of a frame.
15	Reserved	Must be kept at reset value.
14:8	FSAWD[6:0]	Frame synchronization active width. **Note**: This control field must be configured before the audio sub-block is enabled, and it is meaningless in AC'97 mode. **Note**: This control field specified the active width of FS in terms of (FSAWD + 1) SCK clock cycles.
7:0	FWD[7:0]	Frame width **Note**: This control field must be configured before the audio sub-block is enabled, and it is meaningless in AC'97 mode. **Note**: This control field specified the frame width in terms of (FWD + 1) SCK clock cycles, When the audio sub-block is configured in master mode, and BYPASS = 0, (FWD+1) must equals the results of an exponential function of base 2 within 8- and 256-bits range.

34.4.5. Block x slot configuration register (SAI_BxSCFG) (x = 0,1)

Address offset: 0x10 + 0x20 * x

Reset value: 0x0000 0000

This register has to be accessed by word (32-bit).

31	30	29	28	27	26	25	24	23	22	21	20	19	18	17	16
SLOTAV[15:0]															
rw															

15	14	13	12	11	10	9	8	7	6	5	4	3	2	1	0
Reserved				SLOTNUM[3:0]				SLOTWD[1:0]		Reserved	DATAOST[4:0]				
				rw				rw			rw				

Bits	Fields	Descriptions
31:16	SLOTAV[15:0]	Slot activation vector. 0: Slot inactive. 1: Slot active. Each bit in the SLOTAV vector is aligned to the slot number from 0 to 15, if SLOTNUM is less than 15, the unaligned vector bits is ignored. **Note**: This control field must be configured before the audio sub-block is enabled. **Note**: This control field is meaningless in AC'97 or SPDIF mode.
15:12	Reserved	Must be kept at reset value.
11:8	SLOTNUM[3:0]	Slot number within frame. The actual slot number with in a frame is (SLOTNUM + 1), and cannot exceed 16. When FSFUNC is set, slot number must be even for equals' allocation to both channels. **Note**: This control field must be configured before the audio sub-block is enabled. **Note**: This control field is meaningless in AC'97 mode.
7:6	SLOTWD[1:0]	Slot width. 00: Slot width equals' data width. 01: Slot width of 16-bits. 10: Slot width of 32-bits. 11: Reserved. Slot width must be greater or equal to data width to hold the data, Otherwise the behavior is not guaranteed. **Note**: This control field must be configured before the audio sub-block is enabled. **Note**: This control field is meaningless in AC'97 or SPDIF mode.
5	Reserved	Must be kept at reset value.
4:0	DATAOST[4:0]	Data offset. Defines when the first bit of data appear within an active slot, in transition mode, the SD output in the offset and empty section depends on SDOM and nearby slot activation status, 0 or Hi-Z will be outputted. While in reception mode, data content on the offset and empty section will be ignored. **Note**: This control field must be configured before the audio sub-block is enabled. **Note**: This control field is meaningless in AC'97 mode.

34.4.6. Block x interrupt enable register (SAI_BxINTEN) (x = 0,1)

Address offset: 0x14 + 0x20 * x

Reset value: 0x0000 0000

This register has to be accessed by word (32-bit).

31	30	29	28	27	26	25	24	23	22	21	20	19	18	17	16
Reserved															

15	14	13	12	11	10	9	8	7	6	5	4	3	2	1	0
Reserved									FSPDETIE	FSADETIE	ACNRDYIE	FFREQIE	ERRCKIE	MTDETIE	OUERRIE
									rw	rw	rw	rw	rw	rw	rw

Bits	Fields	Descriptions
31:7	Reserved	Must be kept at reset value.
6	FSPDETIE	Frame synchronization postpone detection interrupt enable. 0: Interrupt disabled. 1: Interrupt enabled. An interrupt is generated if FSPDET and FSPDETIE are both set. **Note**: This control field is meaningless when the audio sub-block is configured as master. **Note**: This control field is meaningless in AC'97 mode.
5	FSADETIE	Frame synchronization advanced detection interrupt enable. 0: Interrupt disabled. 1: Interrupt enabled. An interrupt is generated if FSADET and FSADETIE are both set. **Note**: This control field is meaningless when the audio sub-block is configured as master. **Note**: This control field is meaningless in AC'97 mode.
4	ACNRDYIE	Audio codec not ready interrupt enable. 0: Interrupt disabled. 1: Interrupt enabled. An interrupt is generated if ACNRDY and ACNRDYIE are both set. **Note**: This control field has a meaning only when the audio sub-block is configured as receiver. **Note**: This control field has a meaning only when AC'97 mode is selected.
3	FFREQIE	FIFO request interrupt enable. 0: Interrupt disabled. 1: Interrupt enabled. An interrupt is generated if FFREQ and FFREQIE are both set. **Note**: When the audio sub-block is configured as receiver, OPTMOD must be set

		before FFREQIE is enabled to guarantee no false FIFO request is generated since the sub-block is transmitter after reset.
2	ERRCKIE	Error clock interrupt enable. It is set and cleared by software. 0: Interrupt disabled. 1: Interrupt enabled. An interrupt is generated if ERRCK and ERRCKIE are both set. **Note**: This control field is relevant only if the audio sub-block is configured as master and the BYPASS is set to 0 in the clock divide logic. **Note**: This control filed is used when TDM mode is selected, it is meaningless in other modes.
1	MTDETIE	Mute detection interrupt enable. 0: Interrupt disabled. 1: Interrupt enabled. An interrupt is generated if MTDET and MTDETIE are both set. Note: this control field has a meaning only when the audio sub-block is configured as receiver.
0	OUERRIE	FIFO overrun or underrun interrupt enable. 0: Interrupt disabled. 1: Interrupt enabled. An interrupt is generated if OUERR and OUERRIE are both set.

34.4.7. Block x status register (SAI_BxSTAT) (x = 0,1)

Address offset: 0x18 + 0x20 * x

Reset value: 0x0000 0008

This register has to be accessed by word (32-bit).

31	30	29	28	27	26	25	24	23	22	21	20	19	18	17	16
Reserved													FFSTAT[2:0]		
														r	

15	14	13	12	11	10	9	8	7	6	5	4	3	2	1	0
Reserved									FSPDET	FSADET	ACNRDY	FFREQ	ERRCK	MTDET	OUERR
									r	r	r	r	r	r	r

Bits	Fields	Descriptions
31:19	Reserved	Must be kept at reset value.
18:16	FFSTAT[2:0]	FIFO status. Indicate the full/empty status of the FIFO, and it is controlled solely by hardware, where different evaluation standards is present according to audio sub-blocks operating mode. In case OPTMOD is configured as receiver: 000: Empty.

		001: Empty <FIFO_Level<= 1/4_Full. 010: 1/4_Full <FIFO_Level<= 1/2_Full. 011: 1/2_Full <FIFO_Level<= 3/4_Full. 100: 3/4_Full <FIFO_Level< Full 101: Full. And when OPTMOD is configured as transmitter: 000: Empty. 001: Empty <FIFO_Level< 1/4_Full. 010: 1/4_Full <= FIFO_Level< 1/2_Full. 011: 1/2_Full <= FIFO_Level< 3/4_Full. 100: 3/4_Full <= FIFO_Level< Full 101: Full.
15:7	Reserved	Must be kept at reset value.
6	FSPDET	Frame synchronization postponed detection. 0: Correct FS edge reception. 1: FS edge reception postponed. FS edge reception postponed could generate an interrupt if FSPDETIE is set. This flag is cleared by FSPDETC control filed. **Note**: This control field has a meaning only when the audio sub-block is configured as slave.
5	FSADET	Frame synchronization advanced detection. 0: Correct FS edge reception. 1: FS edge reception advanced. FS edge reception advanced could generate an interrupt if FSADETIE is set. This flag is cleared by FSADETC control filed. **Note**: This control field has a meaning only when the audio sub-block is configured as slave.
4	ACNRDY	Audio codec not ready. 0: AC'97 codec ready. 1: AC'97 codec not ready. Bit-15 in TAG slot of each frame is the AC'97 audio codec ready indication bit. 0 indicate the audio codec is not ready, on the other hand, 1 means ready. AC'97 codec not ready could generate an interrupt if ACNRDYIE is set. This flag is cleared by ACNRDYC control field. **Note**: This control field is used only in AC'97 mode.
3	FFREQ	FIFO request 0: No FIFO request. 1: FIFO write or read request. FIFO request could generate an interrupt if FFREQIE is set. The request type depend on audio sub-block configuration, if OPTMOD is configured as transmitter and all conditions met, write request in generated, else if

		receiver mode is selected, read request is generated.
2	ERRCK	Error clock. 0: Correct clock configuration 1: Error clock configuration. Error clock configuration could generate an interrupt if ERRCKIE is set. This flag is cleared by ERRCKC control field. This control field has a meaning only when the audio sub-block is configured as master and BYPASS is set to 0.
1	MTDET	Mute detection. 0: No mute detected 1: Mute detected. Mute detection could generate an interrupt if MTDETIE is set. This flag is cleared by MTDETC control field. When the number of frame whose slots received is all 0 value reaches the frame number defined in MTFCNT, mute detection flag is set. Mute could not be detected when slot number is less the 2 and MTVAL is set, in the transmitter, where the frame before mute is transferred repeatedly.
0	OUERR	Overrun or underrun. 0: No FIFO overrun or underrun detected 1: FIFO overrun or underrun detected. FIFO overrun or underrun interrupt could be generated if OUERRIE is set. This flag is cleared by OUERRC control field. FIFO overrun is generated only when the audio sub-block is configured as receiver, the received data fill the FIFO and the FIFO is full. FIFO underrun is generated only when the audio sub-block is configured as transmitter, the FIFO is empty and a transfer request is present.

34.4.8. Block x interrupt flag clear register (SAI_BxINTC) (x = 0,1)

Address offset: 0x1C + 0x20 * x

Reset value: 0x0000 0000

This register has to be accessed by word (32-bit).

31	30	29	28	27	26	25	24	23	22	21	20	19	18	17	16
Reserved															

15	14	13	12	11	10	9	8	7	6	5	4	3	2	1	0
Reserved									FSPDETC	FSADETC	ACNRDYC	Reserved	ERRCKC	MTDETC	OUERRC
									rw	rw	rw		rw	rw	rw

Bits	Fields	Descriptions

31:7	Reserved	Must be kept at reset value.
6	FSPDETC	Frame synchronization postponed detection interrupt clear. Writing 1 clears FSPDET flag. **Note**: This control field is not used in AC'97 or SPDIF mode. **Note**: This field always reads as 0.
5	FSADETC	Frame synchronization advanced detection interrupt clear. Writing 1 clears FSADET flag. **Note**: This control field is not used in AC'97 or SPDIFmode. **Note**: This field always reads as 0.
4	ACNRDYC	Audio codec not ready interrupt clear. Writing 1 clears ACNRDY flag. **Note**: This control field is only used in AC'97 mode. **Note**: This field always reads as 0.
3	Reserved	Must be kept at reset value.
2	ERRCKC	Clock error interrupt clear. Writing 1 clears ERRCK flag. **Note**: This control field is only used when the audio sub-block is configured as master and BYPASS is set to 0. Note: This field always reads as 0.
1	MTDETC	Mute detection interrupt clear. Writing 1 clears MTDET flag. **Note**: This field always reads as 0.
0	OUERRC	Overrun or underrun interrupt clear. Writing 1 clears OUERR flag. **Note**: This field always reads as 0.

34.4.9. Block x data register (SAI_BxDATA) (x = 0,1)

Address offset: 0x20 + 0x20 * x

Reset value: 0x0000 0000

This register has to be accessed by word (32-bit).

31	30	29	28	27	26	25	24	23	22	21	20	19	18	17	16
DATA[31:16]															
rw															

15	14	13	12	11	10	9	8	7	6	5	4	3	2	1	0
DATA[15:0]															
rw															

Bits	Fields	Descriptions

31:0	DATA[31:0]	Data. Write and read operations are performed on the FIFO directly.

34.4.10. PDM control register (SAI_PDMCTL)

Address offset: 0x44

Reset value: 0x0000 0000

This register has to be accessed by word (32-bit).

31	30	29	28	27	26	25	24	23	22	21	20	19	18	17	16
Reserved															

15	14	13	12	11	10	9	8	7	6	5	4	3	2	1	0
Reserved						CLKL1EN	CLKL0EN	Reserved		MICNUMSEL		Reserved			PDMEN
						rw	rw			rw					rw

Bits	Fields	Descriptions
31:10	Reserved	Must be kept at reset value.
9	CLKL1EN	PDM clock line 1 enable. 0: PDM clock line 1 disable 1: PDM clock line 1 enable
8	CLKL0EN	PDM clock line 0 enable. 0: PDM clock line 0 disable 1: PDM clock line 0 enable
7:6	Reserved	Must be kept at reset value.
5:4	MICNUMSEL	Select microphones number 00: 2 microphones 01: 4 microphones 10: 6 microphones 11: 8 microphones
3:1	Reserved	Must be kept at reset value.
0	PDMEN	PDM enable 0: PDM disable 1: PDM enbale

34.4.11. PDM configuration register (SAI_PDMCFG)

Address offset: 0x48

Reset value: 0x0000 0000

This register has to be accessed by word (32-bit).

31	30	29	28	27	26	25	24	23	22	21	20	19	18	17	16
Reserved	DPR3[2:0]			Reserved	DPL3[2:0]			Reserved	DPR2[2:0]			Reserved	DPL2[2:0]		
	rw				rw				rw				rw		

15	14	13	12	11	10	9	8	7	6	5	4	3	2	1	0
Reserved	DPR1[2:0]			Reserved	DPL1[2:0]			Reserved	DPR0[2:0]			Reserved	DPL0[2:0]		
	rw				rw				rw				rw		

Bits	Fields	Descriptions
31	Reserved	Must be kept at reset value.
30:28	DPR3[2:0]	The 3rd group of right channel microphone data flow delay period 000: No delay 001: delay 1 T_{SAI_CK} period 010: delay 2 T_{SAI_CK} periods … 111: delay 7 T_{SAI_CK} periods
27	Reserved	Must be kept at reset value.
26:24	DPL3[2:0]	The 3rd group of left channel microphone data flow delay period 000: No delay 001: delay 1 T_{SAI_CK} period 010: delay 2 T_{SAI_CK} periods … 111: delay 7 T_{SAI_CK} periods
23	Reserved	Must be kept at reset value.
22:20	DPR2[2:0]	The 2nd group of right channel microphone data flow delay period 000: No delay 001: delay 1 T_{SAI_CK} period 010: delay 2 T_{SAI_CK} periods … 111: delay 7 T_{SAI_CK} periods
19	Reserved	Must be kept at reset value.
18:16	DPL2[2:0]	The 2nd group of left channel microphone data flow delay period 000: No delay 001: delay 1 T_{SAI_CK} period 010: delay 2 T_{SAI_CK} periods … 111: delay 7 T_{SAI_CK} periods
15	Reserved	Must be kept at reset value.
14:12	DPR1[2:0]	The 1st group of right channel microphone data flow delay period 000: No delay

		001: delay 1 T_{SAI_CK} period 010: delay 2 T_{SAI_CK} periods … 111: delay 7 T_{SAI_CK} periods
11	Reserved	Must be kept at reset value.
10:8	DPL1[2:0]	The 1st group of left channel microphone data flow delay period 000: No delay 001: delay 1 T_{SAI_CK} period 010: delay 2 T_{SAI_CK} periods … 111: delay 7 T_{SAI_CK} periods
7	Reserved	Must be kept at reset value.
6:4	DPR0[2:0]	The 0 group of right channel microphone data flow delay period 000: No delay 001: delay 1 T_{SAI_CK} period 010: delay 2 T_{SAI_CK} periods … 111: delay 7 T_{SAI_CK} periods
3	Reserved	Must be kept at reset value.
2:0	DPL0[2:0]	The 0 group of left channel microphone data flow delay period 000: No delay 001: delay 1 T_{SAI_CK} period 010: delay 2 T_{SAI_CK} periods … 111: delay 7 T_{SAI_CK} periods

35. Image processing accelerator (IPA)

35.1. Overview

The IPA provides a configurable and flexible image format conversion from one or two source image to the destination image, with the following four conversion modes:

- Copy one source image to the destination image
- Convert one source image to the destination image with specific pixel format
- Convert and blend two source images to the destination image with specific pixel format
- Fill up the destination image with a specific color

Sixteen pixel formats for foreground from 4-bit up to 32-bit per pixel, eleven pixel formats for background from 4-bit up to 32-bit per pixel, and five pixel formats from 16-bit up to 32-bit per pixel for the destination image are supported. Two 256*32 bits LUTs (Look-Up Table) separately for the two source images are implemented for the indirect pixel formats.

35.2. Characteristics

- One AXI master interface for memory access
- One AHB slave interface for IPA configuration with 8-bit, 16-bit, 32-bit
- Three four-doubleword depth 64-bit FIFOs independently for the source and destination images
- Support four pixel-format-convert modes
  - Copy one source image to the destination image
  - Convert one source image to the destination image with specific pixel format
  - Convert and blend two source images to the destination image with specific pixel format
  - Fill up the destination image with a specific color
- Support configurable LUT size independently for two source images
- Support two LUT pixel formats separately for two source images
- Support LUT automatically loading for two source images
- Support transfer hang up and stop
- Support pixel offset per line independently for the source and destination images
- Support pre-defined pixel channel value independently for the source and destination images
- Support three alpha channel value calculation algorithms separately for two source images
- Support sixteen pixel formats for foreground image
- Support eleven pixel formats for background image
- Support five pixel formats for the destination image
- Support configurable image size

- Support automatically AXI bandwidth adjustment with an internal timer
- Support one interrupt with six types of event flags
- Support interrupt enable and clear
- Support decimal scaling and bilinear scaling
- Support image rotation (0, 90, 180, 270 degrees)
- Support interlace input for the foreground image

35.3. Block diagram

Figure 35-1. IPA block diagram

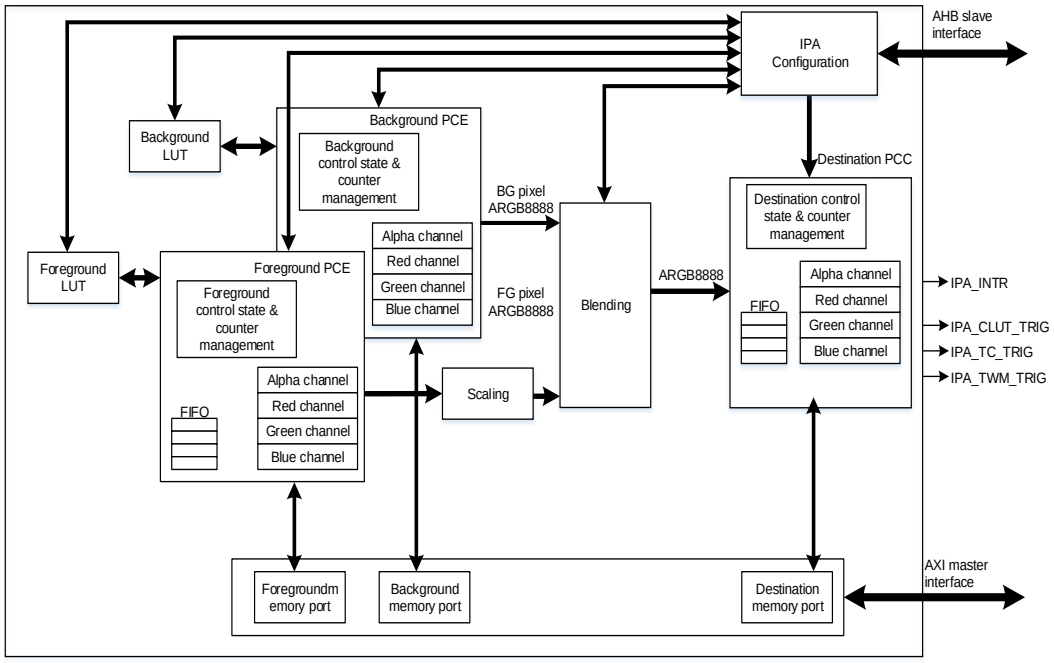

As showed in ***Figure 35-1. IPA block diagram***, the IPA consists of 7 main parts:

- IPA configuration through AHB slave interface
- Image data access through AXI master interface
- Foreground and background LUT
- Foreground and background pixel channel extension (PCE)
- Foreground scaling block
- Foreground and background pixel blending
- Destination pixel channel compression (PCC)

35.4. Signal description

The signals of IPA are listed in ***Table 35-1. Signals description of IPA***.

Table 35-1. Signals description of IPA

I/O port	Type	Description
IPA_INTR	O	IPA global interrupt signal
IPA_CLUT_TRIG	O	IPA CLUT transfer complete trigger signal
IPA_TC_TRIG	O	IPA transfer complete trigger signal
IPA_TWM_TRIG	O	IPA transfer watermark trigger signal

35.5. Function overview

The IPA is a pixel format converter, supporting multiple conversion modes, foreground pixel formats and line offset, background pixel formats and line offset, destination pixel formats and line offset to allow for flexible application by configuring the corresponding bits in the IPA registers. All the IPA registers (expect for LUT accesses only 32-bit supported) can be 8-bit, 16-bit and 32-bit configured through AHB slave interface.

Four conversion modes are supported, which is determined by the PFCM bits in the IPA_CTL register, as listed in the ***Table 35-2. IPA conversion mode***.

- Copy foreground image to the destination image

  In this mode, the pixel data in the foreground memory are copied to the destination memory without pixel conversion. So the configured pixel format of the foreground and destination images have no specific meaning. The foreground pixel format only defines the bit number per pixel.

- Convert foreground image to the destination image

  In this mode, the pixel data in the foreground memory are converted from the foreground pixel format to the destination pixel format, and then written into the destination memory. If the foreground pixel format is indirect (L8, AL44, AL88, L4), the data read from the foreground memory is used as an index to retrieve the pixel data from the foreground LUT.

- Convert and blend the foreground and background images to the destination image

  In this mode, the pixel data in the foreground and background memory are firstly converted from the foreground and background pixel format to ‘ARGB8888’. Pairs of foreground and background pixel value are blended and converted from ‘ARGB8888’ to the destination pixel format, and then written into the destination memory.

  If the foreground pixel format is indirect, the data read from the foreground memory is used as an index to retrieve the pixel data from the foreground LUT.

  If the background pixel format is indirect, the data read from the background memory is used as an index to retrieve the pixel data from the background LUT.

- Fill up the destination image with a specific color

In this mode, the destination image is filled up with the pre-defined pixel channel value, corresponding with the destination pixel format.

Table 35-2. IPA conversion mode

PFCM[1:0]	Conversion mode		Pixel conversion	Blending
	Source	Destination		
00	Foreground image	Destination image	No	No
01	Foreground image	Destination image	Yes	No
10	Foreground and background image	Destination image	Yes	Yes
11	Pixel value pre-defined in the register	Destination image	No	No

35.5.1. Conversion operation

An IPA transaction consists of seven operations:

1) Read pixel data from the foreground memory addressed through the IPA_FMADDR. Retrieve the pixel data from the foreground LUT if the foreground pixel format is indirect.
2) Extend the foreground pixel value to a 32-bit value, and calculate the alpha channel value according to the FAVCA bits in the IPA_FPCTL register.
3) Read pixel data from the background memory addressed through the IPA_BMADDR. Retrieve the pixel data from the background LUT if the background pixel format is indirect.
4) Extend the background pixel value to a 32-bit value, and calculate the alpha channel value according to the BAVCA bits in the IPA_BPCTL register.
5) Blend the processed foreground and background pixel data.
6) Compress the pixel data into the value with the destination pixel format determined by the DPF bits in the IPA_DPCTL register.
7) Write the converted pixel data into the destination memory addressed through the IPA_DMADDR.

Three eight-doubleword depth 64-bit FIFOs are implemented for the foreground, background and four-doubleword depth 64-bit FIFO is for the destination pixel data processing. The foreground and background FIFO are buffers to store the data reading from the corresponding source memory and the destination FIFO is pushed with the processed pixel data which is ready to write into the destination memory when the AXI bus is idle.

If the PFCM bits in the IPA_CTL register is configured to ‘00’ or ‘01’ to copy or convert foreground image to the destination image, only the foreground FIFO and destination FIFO are activated. If the IPA operates to fill up the destination image with the specific color, none of these three FIFOs is activated.

35.5.2. Foreground and background LUT

Two LUTs are implemented in the IPA to store the pixel value for the usage of the indirect pixel format. The pixel value must be written into the LUT before the IPA transfer is enabled when the pixel format is indirect. The pixel value in the LUT can be updated in two ways:

- Automatically loading:

  Enable the FLLEN/BLLEN bit in the IPA_FPCTL/IPA_BPCTL register. The FCNP or BCNP bits in the IPA_FPCTL or IPA_BPCTL register define the number of pixels to be loaded, which is equal to FCNP+ 1 or BCNP + 1.

- Software program:

  The pixel data is written into the corresponding memory address through the IPA AHB slave interface. The base address offset of foreground LUT is 0x0400, and the base address offset of background LUT is 0x0800.

Two pixel formats are supported for the LUTs, including 'ARGB8888' and 'RGB888', which is determined by the FLPF or BLPF bit in the IPA_FPCTL or IPA_BPCTL register, as listed in the *Table 35-3. Foreground and background CLUT pixel format*.

Table 35-3. Foreground and background CLUT pixel format

BLPF/FLPF	LUT pixel format	Memory address			
		base + 0x3	base + 0x2	base + 0x1	base + 0x0
0	ARGB8888	A_0[7:0]	R_0[7:0]	G_0[7:0]	B_0[7:0]
1	RGB888	R_3[7:0]	G_3[7:0]	B_3[7:0]	R_2[7:0]
		G_2[7:0]	B_2[7:0]	R_1[7:0]	G_1[7:0]
		B_1[7:0]	R_0[7:0]	G_0[7:0]	B_0[7:0]

Note: If the pixel format is 'RGB888', the alpha value is fixed to 0xFF when updating the pixel data in the LUT.

35.5.3. Foreground and background pixel channel extension (PCE)

In the IPA pixel-format-convert mode with pixel conversion, the foreground (and background) pixel values are extended from the foreground or background pixel format to the 'ARGB8888' format.

The FPF and BPF bits in the IPA_FPCTL and IPA_BPCTL register determine the pixel format of the foreground and background image, as listed in the *Table 35-4. Foreground and background pixel format*.

A pixel consists of five channels:

- Alpha channel: opacity, 0x00: transparent; 0xFF: opaque.
- Red channel: redness, 0x00 No red, 0xFF: fully red.
- Green channel: greenness, 0x00 No green, 0xFF: fully green.

- Blue channel: blueness, 0x00 No blue, 0xFF: fully blue.
- Luminance channel: In the IPA, the value of the luminance channel is used as an index to retrieve the pixel data from the foreground or background LUT.

Table 35-4. Foreground and background pixel format

BPF[3:0]/FPF[3:0]	Pixel format	Memory address			
		base + 0x3	base + 0x2	base + 0x1	base + 0x0
0000	ARGB8888	A_0[7:0]	R_0[7:0]	G_0[7:0]	B_0[7:0]
0001	RGB888	R_3[7:0]	G_3[7:0]	B_3[7:0]	R_2[7:0]
		G_2[7:0]	B_2[7:0]	R_1[7:0]	G_1[7:0]
		B_1[7:0]	R_0[7:0]	G_0[7:0]	B_0[7:0]
0010	RGB565	R_1[4:0]G_1[5:3]	G_1[2:0]B_1[4:0]	R_0[4:0]G_0[5:3]	G_0[2:0]B_0[4:0]
0011	ARGB1555	A_1[0]R_1[4:0]G_1[4:3]	G_1[2:0]B_1[4:0]	A_0[0]R_0[4:0]G_0[4:3]	G_0[2:0]B_0[4:0]
0100	ARGB4444	A_1[3:0]R_1[3:0]	G_1[3:0]B_1[3:0]	A_0[3:0]R_0[3:0]	G_0[3:0]B_0[3:0]
0101	L8	L_3[7:0]	L_2[7:0]	L_1[7:0]	L_0[7:0]
0110	AL44	A_3[3:0]L_3[3:0]	A_2[3:0]L_2[3:0]	A_1[3:0]L_1[3:0]	A_0[3:0]L_0[3:0]
0111	AL88	A_1[7:0]	L_1[7:0]	A_0[7:0]	L_0[7:0]
1000	L4	L_7[3:0]L_6[3:0]	L_5[3:0]L_4[3:0]	L_3[3:0]L_2[3:0]	L_1[3:0]L_0[3:0]
1001	A8	A_3[7:0]	A_2[7:0]	A_1[7:0]	A_0[7:0]
1010	A4	A_7[3:0]A_6[3:0]	A_5[3:0]A_4[3:0]	A_3[3:0]A_2[3:0]	A_1[3:0]A_0[3:0]
1011	YUV444*	Y_3[7:0]	U_3[7:0]	V_3[7:0]	Y_2[7:0]
		U_2[7:0]	V_2[7:0]	Y_1[7:0]	U_1[7:0]
		V_1[7:0]	Y_0[7:0]	U_0[7:0]	V_0[7:0]
1100	UYVY422*	Y_1[7:0]	V_{01}[7:0]	Y_0[7:0]	U_{01}[7:0]
1101	VYUY422*	Y_1[7:0]	U_{01}[7:0]	Y_0[7:0]	V_{01}[7:0]
1110	YUV420*	…	…	…	…
		V_{2367}[7:0]	U_{2367}[7:0]	V_{0145}[7:0]	U_{0145}[7:0]
		…	…	…	…
		Y_7[7:0]	Y_6[7:0]	Y_5[7:0]	Y_4[7:0]@line2
		Y_3[7:0]	Y_2[7:0]	Y_1[7:0]	Y_0[7:0]@line1
1111	YVU420*	…	…	…	…
		U_{2367}[7:0]	V_{2367}[7:0]	U_{0145}[7:0]	V_{0145}[7:0]
		…	…	…	…
		Y_7[7:0]	Y_6[7:0]	Y_5[7:0]	Y_4[7:0]@line2
		Y_3[7:0]	Y_2[7:0]	Y_1[7:0]	Y_0[7:0]@line1

Note*: YUV format are only supported in foreground image.

If the pixel format is 'RGB888', the alpha channel value is equal to 0xFF when extending the pixel data, as shown in ***Figure 35-2. Pixel extension from 'RGB888' to 'ARGB8888'***.

Figure 35-2. Pixel extension from 'RGB888' to 'ARGB8888'

- RGB888 → ARGB8888

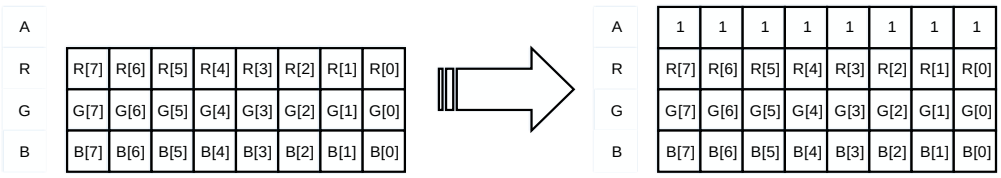

If the pixel format is 'RGB565', the alpha channel value is equal to 0xFF when extending the pixel data. The red, green and blue channel value is extended to 8-bit by setting the MSBs to the original bits and copying the MSBs to the LSBs, as shown in ***Figure 35-3. Pixel extension from 'RGB565' to 'ARGB8888'***.

Figure 35-3. Pixel extension from 'RGB565' to 'ARGB8888'

- RGB565 → ARGB8888

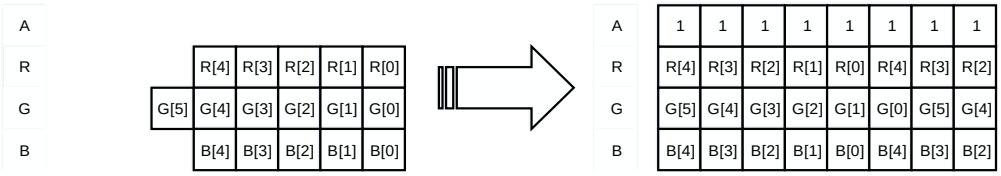

If the pixel format is 'ARGB1555' or 'ARGB4444', The value of every channel is extended to 8-bit by setting the MSBs to the original bits and copying the MSBs to the LSBs, as shown in the ***Figure 35-4. Pixel extension from 'ARGB1555' or 'ARGB4444' to 'ARGB8888'***.

Figure 35-4. Pixel extension from 'ARGB1555' or 'ARGB4444' to 'ARGB8888'

- ARGB1555 → ARGB8888

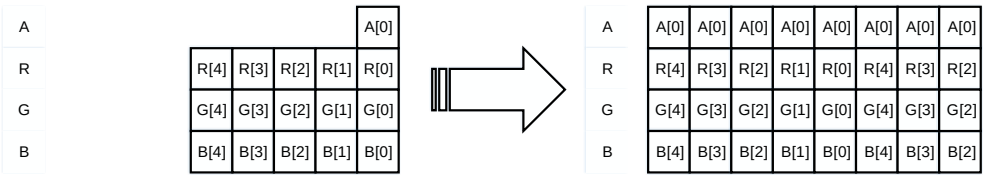

- ARGB4444 → ARGB8888

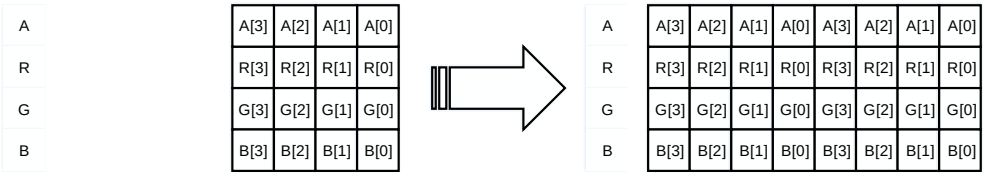

If the pixel format is 'L8' or 'L4', the pixel data is retrieved from the LUT with the 8-bit luminance channel value (MSBs filled with '0' when 'L4').

If the pixel format is 'AL44', only the red, green and blue channel values are retrieved from the LUT with the 8-bit luminance channel value (MSBs filled with '0'). And the alpha channel value is extended to 8-bit by setting the MSBs to the original bits and copying the MSBs to the LSBs.

If the pixel format is 'AL88', only the red, green and blue channel values are retrieved from the LUT with the 8-bit luminance channel value.

If the pixel format is 'A8', the red, green and blue channel values are separately equal to the FPDRV or BPDRV bits, FPDGV or BPDGV bits and FPDBV or BPDBV bits in the IPA_FPV or IPA_BPV register.

If the pixel format is 'A4', the alpha channel value is extended to 8-bit by setting the MSBs to the original bits and copying the MSBs to the LSBs. The red, green and blue channel values are separately equal to the FPDRV or BPDRV bits, FPDGV or BPDGV bits and FPDBV or BPDBV bits in the IPA_FPV or IPA_BPV register.

The PCE also support color conversion from YUV/YCbCr to ARGB8888 format. The following equations are used to perform this process. The constants will be stored in the IPA_CSCC_CFGx (x=0…2) control registers as two's compliment values, which allow flexibility in the implementation and differences in the video encode and decode operations. In addition, it also provides a software mechanism to manipulate brightness or contrast.

$$R = C0(Y+Yoffset) + C1(V+UVoffset) \quad (35\text{-}1)$$

$$G = C0(Y+Yoffset) + C3(U+UVoffset) + C2(V+UVoffset) \quad (35\text{-}2)$$

$$B = C0(Y+Yoffset) + C4(U+UVoffset) \quad (35\text{-}3)$$

Table 35-5. Expected coefficients for YUV and YCbCr modes indicates the expected coefficients for YUV and YCbCr modes.

Table 35-5. Expected coefficients for YUV and YCbCr modes

Coff	YUV	YCbCr
YOFF	0x000	0x1F0 (-16)
UVOFF	0x000	0x180 (-128)
C0	0x100 (1.00)	0x12A (1.164)
C1	0x123 (1.140)	0x198 (1.596)
C2	0x76B (-0.581)	0x730 (-0.813)
C3	0x79B (-0.394)	0x79C (-0.392)
C4	0x208 (2.032)	0x204 (2.017)

Three algorithms are supported to modulate the alpha channel value, which is determined by the FAVCA or BAVCA bits in the IPA_FPCTL or IPA_BPCTL register, as described in ***Table 35-6. Alpha channel value modulation***.

Table 35-6. Alpha channel value modulation

FAVCA[1:0]/BAVCA[1:0]	Alpha calculation algorithm
00/11	No effect, equal to the original value
01	Equal to the FPDAV or BPDAV bits in the IPA_FPCTL or IPA_BPCTL register
10	Equal to the FPDAV or BPDAV bits multiplied by the original alpha value and divided by 255

35.5.4. Foreground channel scaling

IPA implements a bilinear scaling filter to adjust the input image to different resolutions in foreground channel. The HORDEC and VERDEC in IPA_DPCTL register define the horizontal and vertical pre decimation filter control. The XSCALE and YSCALE in IPA_BSCTL register provide the the X and Y scaling factor for the Foreground. The maximum down scaling factors of decimation filter and bilinear filter are 8 and 2 respectively, so that the maximum scaling factor can be up to 16. The detailed sampling method of the decimation filter is shown in *Figure 35-5. Sampling method of decimation filter*.

Figure 35-5. Sampling method of decimation filter

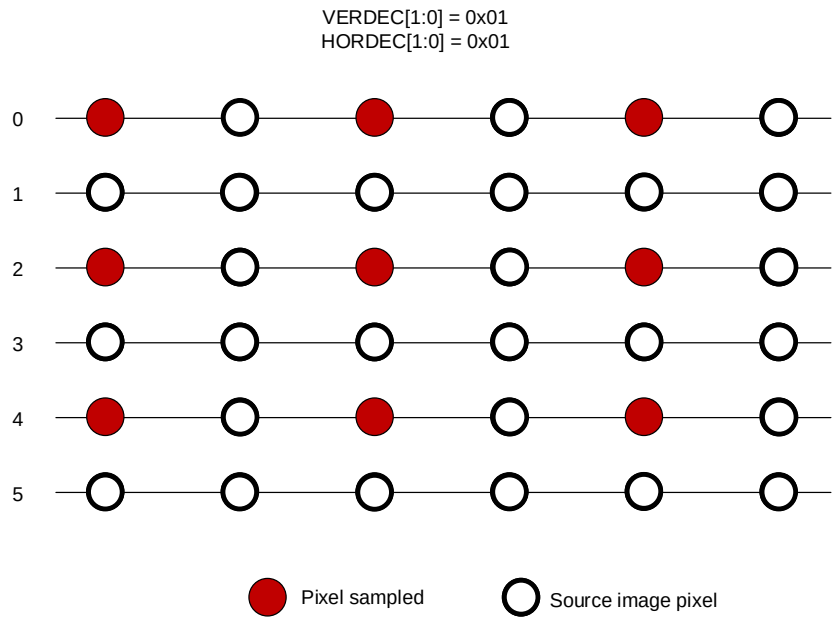

The maximum down scaling factor is 1/2 and the maximum up scaling factor is 2^12 for each axis. In order to realize the scaling function, the reciprocal of the scale factor should be written to IPA_BSCTL register. For example:

```
REG32(IPA_BSCTL) = 0x20002000;      //1/2x scaling (0x2.0)
REG32(IPA_BSCTL) = 0x18001800;      //2/3x scaling (0x1.8)
REG32(IPA_BSCTL) = 0x08000800;      //2x scaling (0x0.8)
REG32(IPA_BSCTL) = 0x04000400;      //4x scaling (0x0.4)
```

The bilinear filter is the weighted average of the four nearest pixels. Suppose P is the output pixel and Q_{11}, Q_{12}, Q_{21}, Q_{22} are the surrounding four source image pixels. As is shown in *Figure 35-6. Bilinear Scaling diagram*.

Figure 35-6. Bilinear Scaling diagram

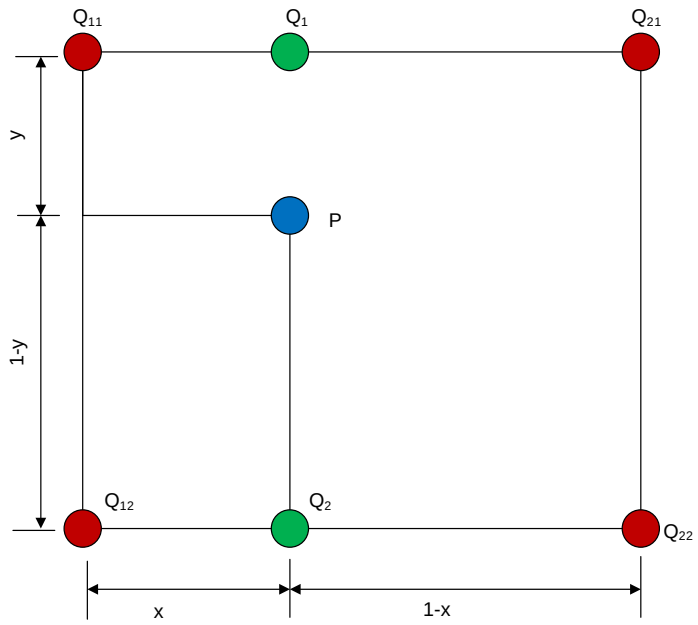

The value of output pixel P is computed by the equation below.

$$P = Q_1(1-y) + Q_2*y \quad (35\text{-}4)$$

Where the equations for Q_1 and Q_2 are as follows:

$$Q_1 = Q_{11}*(1-x) + Q_{21}*x \quad (35\text{-}5)$$

$$Q_2 = Q_{12}*(1-x) + Q_{22}*x \quad (35\text{-}6)$$

The Scaling are only effecitive when PFCM eques to 2'b01 or 2'b10.

35.5.5. Blending

When the IPA operates to convert and blend the foreground and background images to the destination image, the foreground and background pixel data after extending are blended by pair to get a 32-bit pixel value.

The alpha channel value is blended on the base of the following equations (A_F is the foreground alpha value, A_B is the background alpha value):

$$A_{mix} = \frac{A_F \times A_B}{255} \quad (35\text{-}7)$$

$$A_{blend} = A_F + A_B - A_{mix} \quad (35\text{-}8)$$

The red, green and blue channel value are blended on the base of the following equations (R_F, G_F, B_F is the foreground red, green and blue value; R_B, G_B, B_B is the background red, green and blue value):

$$R_{blend} = \frac{R_F \times A_F + R_B \times A_B - R_B \times A_{mix}}{A_{blend}} \quad (35\text{-}9)$$

$$G_{blend} = \frac{G_F \times A_F + G_B \times A_B - G_B \times A_{mix}}{A_{blend}} \quad (35\text{-}10)$$

$$B_{blend} = \frac{B_F \times A_F + B_B \times A_B - B_B \times A_{mix}}{A_{blend}} \quad (35\text{-}11)$$

Note: 1) The quotient of the division is rounded down to the nearest integer.

2) If the A_{blend} is equal to zero, the R_{blend}, G_{blend} and B_{blend} is equal to '0xFF'.

3) The width and height of the background and the destination shall be consistent.

35.5.6. Destination pixel channel compression (PCC)

In the IPA pixel-format-convert mode with pixel conversion, the pixel data need to be compressed from the 'ARGB8888' format into the destination pixel format before they are written into the destination memory.

The DPF bits in the IPA_DPCTL register determine the pixel format of the destination image, as listed in ***Table 35-7. Destination pixel format***.

Table 35-7. Destination pixel format

DPF[2:0]	Pixel format	Memory address			
		base + 0x3	base + 0x2	base + 0x1	base + 0x0
000	ARGB8888	A_0[7:0]	R_0[7:0]	G_0[7:0]	B_0[7:0]
001	RGB888	R_3[7:0]	G_3[7:0]	B_3[7:0]	R_2[7:0]
		G_2[7:0]	B_2[7:0]	R_1[7:0]	G_1[7:0]
		B_1[7:0]	R_0[7:0]	G_0[7:0]	B_0[7:0]
010	RGB565	R_1[4:0]G_1[5:3]	G_1[2:0]B_1[4:0]	R_0[4:0]G_0[5:3]	G_0[2:0]B_0[4:0]
011	ARGB1555	A_1[0]R_1[4:0]G_1[4:3]	G_1[2:0]B_1[4:0]	A_0[0]R_0[4:0]G_0[4:3]	G_0[2:0]B_0[4:0]
100	ARGB4444	A_1[3:0]R_1[3:0]	G_1[3:0]B_1[3:0]	A_0[3:0]R_0[3:0]	G_0[3:0]B_0[3:0]

Note: If the PFCM bits in the IPA_CTL register are equal to '00' (copy the foreground image to the destination image), the DPF bits have no meaning, and the FPF bits in the IPA_FPCTL register determine the bit number per pixel for both the source and destination.

As shown in ***Figure 35-7. Pixel compression***, the destination compression is performed by discarding the LSBs.

Figure 35-7. Pixel compression

- ARGB8888 → RGB888

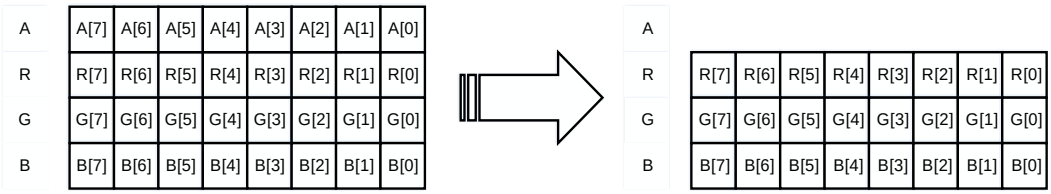

- ARGB8888 → RGB565

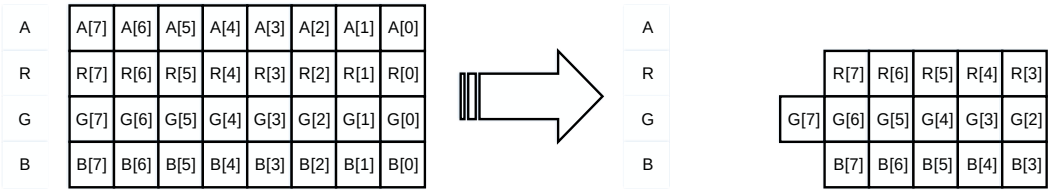

- ARGB8888 → ARGB1555

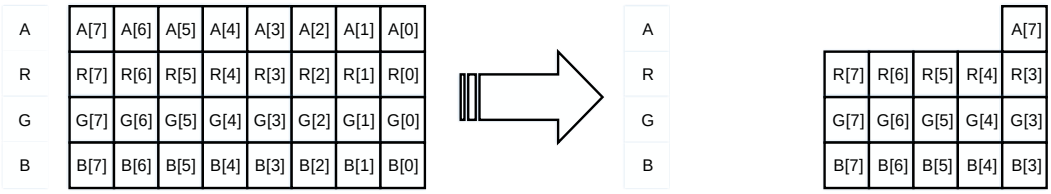

- ARGB8888 → ARGB4444

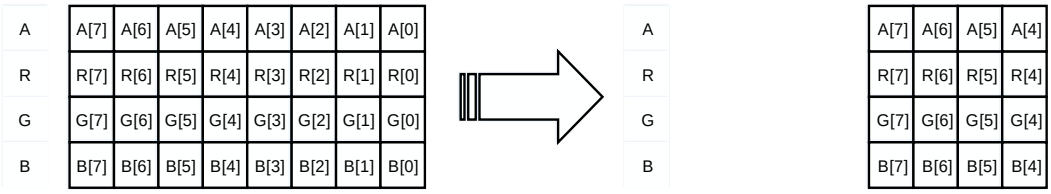

35.5.7. Rotation

The IPA support rotations of 0, 90, 180, and 270 degrees. when ROT bits in IPA_DPCTL are configured, the IPA read input image line by line and put each converted output pixel into the generated output pixel address after rotation.

35.5.8. Inter-timer

To reduce the AXI bandwidth usage of IPA AXI master interface, a timer is implemented to insert a number of clocks between two consecutive AXI commands during IPA transmission and LUT automatic loading.

The internal timer is enabled by setting the ITEN bit in the IPA_ITCTL register. The NCCI bits in the IPA_ITCTL register define the minimum number of clock inserted between two consecutive AXI write or read address channel commands, and these bits have no meaning when the timer is disabled.

Updating the NCCI bits when the ITEN bit is enabled have no effect until the current counting is completed, as shown in ***Figure 35-8. Inter timer operation***.

Figure 35-8. Inter timer operation

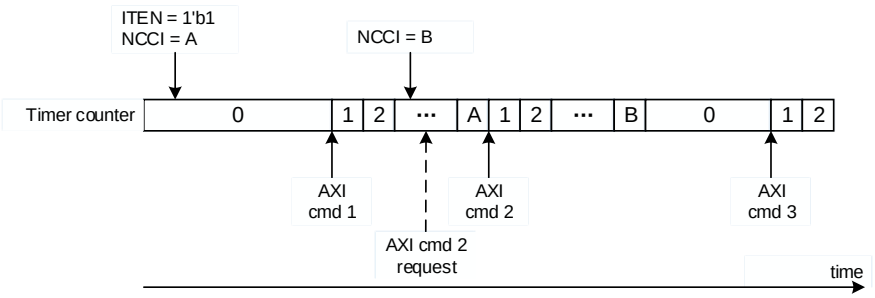

35.5.9. Line mark

The marked line number can be set by configuring the LM bits in the IPA_LM register. As soon as the last pixel data of the line mark has been written into the destination memory, the TLMIF bit in the IPA_INTF register is asserted to detailing the progression of the IPA transfer.

Note: If the LM bits are equal to zero, no line mark flag is asserted during the transmission.

35.5.10. Transfer flow

The foreground/background LUT automatically loading is enabled by setting the FLLEN/BLLEN bit in the IPA_FPCTL/IPA_BPCTL register. Once the loading transfer is launched, the FLLEN/BLLEN bit is used as a transmission flag and writing ‘0’ to the FLLEN/BLLEN bit has no meaning. The FLLEN/BLLEN can be automatically cleared when the loading is finished.

The IPA transfer is enabled by setting the TEN bit in the IPA_CTL register. Once the IPA transfer is launched, the TEN bit is used as a transmission flag and writing ‘0’ to it has no meaning. The TEN bit can be automatically cleared when the IPA transfer is finished.

At any time, the foreground/background LUT automatic loading and IPA transfer can be hanged up by setting the THU bit in the IPA_CTL register. The LUT loading and IPA transfer is paused until the THU bit is cleared by software. When none of the foreground/background LUT automatically loading and IPA transfer is enabled, setting the THU bit has no effect and the THU bit is read as 0.

The foreground/background LUT automatic loading and IPA transfer can be stopped by setting the TST bit in the IPA_CTL register. The LUT loading or IPA transfer is stopped immediately by resetting the FLLEN/BLLEN bit in the IPA_FPCTL/IPA_BPCTL register or the TEN bit in the IPA_CTL register even though the LUT loading or IPA transfer is being hanged up. The TST bit is automatically reset when the current transfer is disabled. When none of the foreground/background LUT automatic loading and IPA transfer is enabled, setting the TST bit has no effect and the TST bit is read as 0.

Only one of the foreground LUT loading, background LUT loading and IPA transfer can be working at a time. For example, when the IPA transfer is ongoing, setting the FLLEN or BLLEN bit has no effect and the FLLEN and BLLEN bit is automatically reset.

35.5.11. Configuration

Before launching any transfers, it is necessary to read the TEN, FLLEN and BLLEN bit to check whether the IPA transfer or the LUT loading is active. If one of them is ongoing, set the TST bit to stop it or wait it finished. When all of the TEN, FLLEN and BLLEN bit are read as 0, starting a new transfer is allowed.

Foreground LUT loading

When starting a new foreground LUT loading, it is recommended to respect the following steps:

1. Configure the IPA_FLMADDR register to set the foreground LUT memory base address.
2. Configure the FLPF bit in the IPA_FPCTL register to set the foreground LUT pixel format.
3. Configure the FCNP bits in the IPA_FPCTL register to set the number of pixel in the foreground LUT to be loaded.
4. Configure the needed enable bit for wrong configuration interrupt, LUT loading finish interrupt, LUT access conflict interrupt and transfer access error interrupt in the IPA_CTL register.
5. Configure the FLLEN bit with ‘1’ in the IPA_FPCTL register to enable the foreground LUT automatically loading.

Background LUT loading

When starting a new background LUT loading, it is recommended to respect the following steps:

1. Configure the IPA_BLMADDR register to set the background LUT memory base address.
2. Configure the BLPF bit in the IPA_BPCTL register to set the background LUT pixel format.
3. Configure the BCNP bits in the IPA_BPCTL register to set the number of pixel in the background LUT to be loaded.
4. Configure the needed enable bit for wrong configuration interrupt, LUT loading finish interrupt, LUT access conflict interrupt and transfer access error interrupt in the IPA_CTL register.
5. Configure the BLLEN bit with ‘1’ in the IPA_BPCTL register to enable the background LUT automatically loading.

IPA transfer

When starting a new IPA transfer, the configuration steps corresponding with the pixel format convert mode are as follows:

Copy the foreground image to the destination image

1. Configure the IPA_FMADDR and IPA_DMADDR register to set the foreground and destination memory base address.
2. Configure the FPF bits in the IPA_FPCTL register to set the foreground pixel format.
3. Configure the FLOFF and DLOFF bits in the IPA_FLOFF and IPA_DLOFF register to set the foreground and destination line offset.
4. Configure the LM bits in the IPA_LM register to set the line mark if needed.
5. Configure the WIDTH and HEIGHT bits in the IPA_IMS register to set the image size.
6. Configure the needed enable bit for wrong configuration interrupt, LUT access conflict interrupt, transfer line mark interrupt, full transfer finish interrupt and transfer access error interrupt in the IPA_CTL register.
7. Configure the TEN bit with '1' in the IPA_CTL register to enable the IPA transfer.

Convert foreground image to the destination image

If the foreground pixel format is indirect, the pixel data must be loaded into the foreground LUT before starting the IPA transfer. The LUT automatic loading procedure is described in the ***Foreground LUT loading***.

1. Configure the IPA_FMADDR and IPA_DMADDR register to set the foreground and destination memory base address.
2. Configure the FAVCA and FPF bits in the IPA_FPCTL register to set the foreground alpha value calculation algorithm and the foreground pixel format. Configure the IPA_CSCC_CFGx (x=0…2) when foreground pixel format is YUV/YCbCr.
3. Configure the pre-defined pixel value, including alpha, red, green and blue value in the IPA_FPCTL and IPA_FPV register if the foreground format is not ARGBxxxx type.
4. Configure the DPF bits in the IPA_DPCTL register to set the destination pixel format.
5. Configure the FLOFF and DLOFF bits in the IPA_FLOFF and IPA_DLOFF register to set the foreground and destination line offset.
6. Configure the VERDEC/HORDEC bits in the IPA_DPCTL, XSCAL/YSCAL bits in IPA_BSCTL and DWIDTH/DHEIGHT bits in the IPA_DIMS if scaling is needed.
7. Configure the ROT bits in the IPA_DPCTL when rotation is needed.
8. Configure the LM bits in the IPA_LM register to set the line mark if needed.
9. Configure the WIDTH and HEIGHT bits in the IPA_IMS register to set the image size.
10. Configure the needed enable bit for wrong configuration interrupt, LUT access conflict interrupt, transfer line mark interrupt, full transfer finish interrupt and transfer access error interrupt in the IPA_CTL register.
11. Configure the TEN bit with '1' in the IPA_CTL register to enable the IPA transfer.

Convert and blend the foreground and background images to the destination image

If the foreground or background pixel format is indirect, the pixel data must be loaded into the corresponding LUT before starting the IPA transfer. The foreground and background LUT automatically loading procedure is described in the ***Foreground LUT loading*** and ***Background LUT loading***.

1. Configure the IPA_FMADDR, IPA_BMADDR and IPA_DMADDR register to set the foreground, background and destination memory base address.
2. Configure the FAVCA and FPF bits in the IPA_FPCTL register to set the foreground alpha value calculation algorithm and the foreground pixel format. Configure the IPA_CSCC_CFGx (x=0…2) when foreground pixel format is YUV/YCbCr.
3. Configure the foreground pre-defined pixel value, including alpha, red, green and blue value in the IPA_FPCTL and IPA_FPV register if the foreground format is not ARGBxxxx type.
4. Configure the BAVCA and BPF bits in the IPA_BPCTL register to set the background alpha value calculation algorithm and the background pixel format. Configure the IPA_CSCC_CFGx (x=0…2) when foreground pixel format is YUV/YCbCr.
5. Configure the background pre-defined pixel value, including alpha, red, green and blue value in the IPA_BPCTL and IPA_BPV register if the background format is not ARGBxxxx type.
6. Configure the DPF bits in the IPA_DPCTL register to set the destination pixel format.
7. Configure the FLOFF, BLOFF and DLOFF bits in the IPA_FLOFF, IPA_BLOFF and IPA_DLOFF register to set the foreground, background and destination line offset.
8. Configure the LM bits in the IPA_LM register to set the line mark if needed.
9. Configure the WIDTH and HEIGHT bits in the IPA_IMS register to set the image size.
10. Configure the VERDEC/HORDEC bits in the IPA_DPCTL, XSCAL/YSCAL bits in IPA_BSCTL and DWIDTH/DHEIGHT bits in the IPA_DIMS if scaling is needed.
11. Configure the ROT bits in the IPA_DPCTL when rotation is needed.
12. Configure the needed enable bit for wrong configuration interrupt, LUT access conflict interrupt, transfer line mark interrupt, full transfer finish interrupt and transfer access error interrupt in the IPA_CTL register.
13. Configure the TEN bit with ‘1’ in the IPA_CTL register to enable the IPA transfer.

Fill up the destination image with a specific color

1. Configure the IPA_DMADDR register to set the destination memory base address.
2. Configure the DPF bits in the IPA_DPCTL register to set the destination pixel format.
3. Configure the destination pre-defined pixel value, including alpha, red, green and blue value in the IPA_DPV register.
4. Configure the DLOFF bits in the IPA_DLOFF register to set the destination line offset.
5. Configure the LM bits in the IPA_LM register to set the line mark if needed.
6. Configure the WIDTH and HEIGHT bits in the IPA_IMS register to set the image size.
7. Configure the needed enable bit for wrong configuration interrupt, LUT access conflict interrupt, transfer line mark interrupt, full transfer finish interrupt and transfer access error interrupt in the IPA_CTL register.
8. Configure the TEN bit with ‘1’ in the IPA_CTL register to enable the IPA transfer.

Configuration rules

The IPA configuration must respect a number of rules, otherwise the transfer or loading is automatically reset and the WCFIF bit in the IPA_INTF register is asserted immediately after

it is enabled. The rules are described as follows:

When the foreground LUT automatically loading is enabled:

- The FLMADDR bits in the IPA_FLMADDR register must be 32-bit alignment when the FLPF bit in the IPA_FPCTL register is equal to ‘0’.

When the background LUT automatically loading is enabled:

- The BLMADDR bits in the IPA_BLMADDR register must be 32-bit alignment when the BLPF bit in the IPA_BPCTL register is equal to ‘0’.

When the IPA transfer is enabled:

1) The FMADDR bits in the IPA_FMADDR register must be 32-bit alignment when the FPF bits in the IPA_FPCTL register are ‘ARGB8888’, ’UYVY422’, ‘VYUY422’, ’YUV420’ or ‘YVU420’ and be 16-bit alignment when the FPF bits are ‘RGB565’, ‘ARGB1555’, ‘ARGB4444’ or ‘AL88’ .
2) The FLOFF bits in the IPA_FLOFF register must be even when the FPF bits in the IPA_FPCTL register are ‘A4’, ‘L4’, ‘UYVY422’ or ‘VYUY422’, and be 4-bit alignment when the FPF bits in the IPA_FPCTL register are ’YUV420’ or ‘YVU420’.
3) The BMADDR bits in the IPA_BMADDR register must be 32-bit alignment when the BPF bits in the IPA_BPCTL register are ‘ARGB8888’, and be 16-bit alignment when the BPF bits are ‘RGB565’, ‘ARGB1555’, ‘ARGB4444’ or ‘AL88’ .
4) The BLOFF bits in the IPA_BLOFF register must be even when the BPF bits in the IPA_BPCTL register are ‘A4’ or ‘L4’.
5) The FPF bits in the IPA_FPCTL register must be valid and less than or equal to ‘0b1111’ when PFCM bits are not ‘0b00’ or ‘0b11’, and be valid and less than or equal to ‘0b1101’ when PFCM bits are ‘0b00’.
6) The BPF bits in the IPA_BPCTL register must be valid and less than or equal to ‘0b1010’.
7) The DPF bits in the IPA_DPCTL register must be valid and less than or equal to ‘0b100’.
8) The DMADDR bits in the IPA_DMADDR register must be 32-bit alignment when the DPF bits in the IPA_DPCTL register are ‘ARGB8888’ and be 16-bit alignment when the DPF bits are ‘RGB565’, ‘ARGB1555’, ‘ARGB4444’.
9) The DLOFF bits in the IPA_DLOFF register must be even when the FPF bits in the IPA_FPCTL register are ‘A4’ or ‘L4’.
10) The WIDTH bits in the IPA_IMS register must be even when the FPF bits in the IPA_FPCTL register are ‘A4’, ‘L4’, ‘UYVY422’ or ‘VYUY422’, and be 4-bit-alignment when the FPF bits in the IPA_FPCTL register are ’YUV420’ or ‘YVU420’.
11) The WIDTH bits in the IPA_IMS register must be even when the BPF bits in the IPA_BPCTL register are ‘A4’ or ‘L4’.
12) The WIDTH bits in the IPA_IMS register must be greater than zero.
13) The HEIGHT bits in the IPA_IMS register must be greater than zero.
14) The XSCALE and YSCALE bits in the IPA_BSCTL register must be greater than zero and less than ‘0x2001’.
15) When the FIIMEN bit is set, the FPF bits in the IPA_FPCTL register must not be ‘YUV420’ and ‘YVU420’, and the EFUVMADDR bits in the IPA_EF_UV_MADDR register must be 32-bit alignment when the FPF bits in the IPA_FPCTL register are

'ARGB8888', 'UYVY422', 'VYUY422', and be 16-bit alignment when the FPF bits are 'RGB565', 'ARGB1555', 'ARGB4444' or 'AL88'.

16) The EFUVMADDR bits in the IPA_EF_UV_MADDR register must be 16-bit alignment when the FPF bits in the IPA_FPCTL register are 'YUV420' or 'YVU420'.
17) When the forechannel scaling is enabled, that is, the HORDEC, VERDEC, XSCALE, YSCALE are not default value. The DWIDTH bits in the IPA_DIMS must be even when the BPF bits in the IPA_BPCTL register are 'A4', 'L4'.
18) When the forechannel scaling and rotation function are enabled, that is, the HORDEC , VERDEC, XSCALE, YSCALE, ROT are not default value. The DHEIGHT bits in the IPA_DIMS must be even when the BPF bits in the IPA_BPCTL register are 'A4' , 'L4'.

When the PFCM bits are equal to '00', only 1), 2), 5), 9), 10), 12), 13) are considerable.
When the PFCM bits are equal to '01', only 1), 2), 5), 7), 8), 10), 12), 13) ,14), 15), 16)are considerable.
When the PFCM bits are equal to '10', all the configuration rules except 9) are considerable.
When the PFCM bits are equal to '11', only 7), 8), 12), 13) are considerable.

35.6. Interrupts

There are six interrupt events connected to the IPA interrupt, including wrong configuration interrupt, LUT loading finish interrupt, LUT access conflict interrupt, transfer line mark interrupt, full transfer finish interrupt and transfer access error interrupt. An IPA interrupt can be produced when any interrupt events occurs.

Each interrupt event has a dedicated flag bit in the IPA_INTF register, a dedicated clear bit in the IPA_INTC register, and a dedicated enable bit in the IPA_CTL register. The relationship is described in the ***Table 35-8. IPA interrupt events***.

Table 35-8. IPA interrupt events

Interrupt event	Flag bit	Enable bit	Clear bit
	IPA_INTF	IPA_CTL	IPA_INTC
wrong configuration interrupt	WCFIF	WCFIE	WCFIFC
LUT loading finish interrupt	LLFIF	LLFIE	LLFIFC
LUT access conflict interrupt	LACIF	LACIE	LACIFC
transfer line mark interrupt	TLMIF	TLMIE	TLMIFC
full transfer finish interrupt	FTFIF	FTFIE	FTFIFC
transfer access error interrupt	TAEIF	TAEIE	TAEIFC

Wrong configuration interrupt

The wrong configuration interrupt flag is asserted immediately after the LUT loading or IPA transfer is enabled, when any of the configuration rules listed in the ***Configuration rules*** is broken. The LUT loading or IPA transfer is automatically disabled without launching any access.

When the wrong configuration interrupt flag is asserted and the enabled bit for wrong

configuration interrupt is set, an IPA interrupt is generated.

LUT loading finish interrupt

The LUT loading finish interrupt flag is asserted immediately after the last pixel data has been loaded into the foreground or background LUT. A stop operation during the loading cannot assert the LUT loading finish interrupt flag.

When the LUT loading finish interrupt flag is asserted and the enabled bit for LUT loading finish interrupt is set, an IPA interrupt is generated.

LUT access conflict interrupt

A number of rules must be respected when accessing the foreground and background LUT by software:

- During the foreground LUT automatic loading, the foreground LUT is forbidden to be accessed by software.
- During the background LUT automatic loading, the background LUT is forbidden to be accessed by software.
- During the IPA transfer with the PFCM bits equal to ‘0b01’ or ‘0b10’, if the foreground pixel format is indirect, the foreground LUT is forbidden to be accessed by software.
- During the IPA transfer with the PFCM bits equal to ‘0b10’, if the background pixel format is indirect, the background LUT is forbidden to be accessed by software.

When one of the above rules is broken, the LUT access conflict interrupt flag is asserted and the software access has no effect (writing access is not be executed, reading access is returned with an invalid value).

When the LUT access conflict interrupt flag is asserted and the enabled bit for the LUT access conflict interrupt is set, an IPA interrupt is generated.

Transfer line mark interrupt

The transfer line mark interrupt flag is asserted immediately after the last pixel data of the line mark is written into the destination memory. If the LM bits in the IPA_LM register are equal to 0, the transfer line mark interrupt flag will never be asserted during the IPA transmission.

When the transfer line mark interrupt flag is asserted and the enabled bit for the transfer line mark interrupt is set, an IPA interrupt is generated.

Full transfer finish interrupt

The full transfer finish interrupt flag is asserted immediately after the last pixel data has been written into the destination memory. A stop operation during the IPA transmission cannot assert the full transfer finish interrupt flag.

When the full transfer finish interrupt flag is asserted and the enabled bit for the full transfer finish interrupt is set, an IPA interrupt is generated.

Transfer access error interrupt

When the address accessed by the IPA is beyond the allowed area, a response error will be received and the transfer (LUT loading or IPA transfer) is disabled immediately without asserting the LUT loading finish interrupt flag or the full transfer finish interrupt flag. The allowed and forbidden access region for IPA is shown in ***Figure 35-9. System connection of IPA***.

When the transfer access error interrupt flag is asserted and the enabled bit for the transfer access error interrupt is set, an IPA interrupt is generated.

Figure 35-9. System connection of IPA

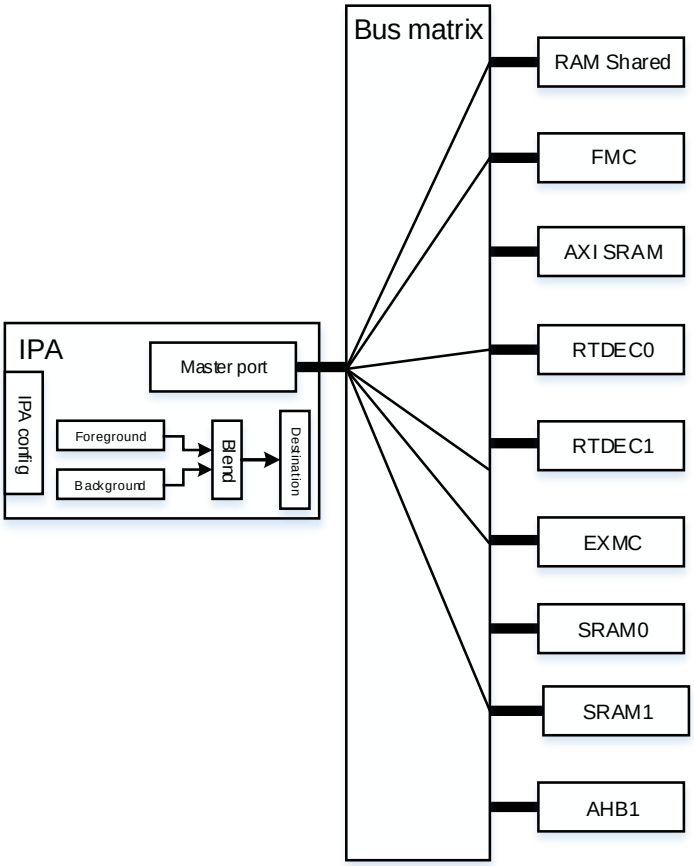

35.7. Register definition

IPA base address: 0x5200 1000

35.7.1. Control register (IPA_CTL)

Address offset: 0x00

Reset value: 0x0000 0000

This register can be accessed by byte (8-bit), half-word (16-bit) and word (32-bit).

31	30	29	28	27	26	25	24	23	22	21	20	19	18	17	16
Reserved														PFCM[1:0]	
														rw	

15	14	13	12	11	10	9	8	7	6	5	4	3	2	1	0
Reserved		WCFIE	LLFIE	LACIE	TLMIE	FTFIE	TAEIE	Reserved					TST	THU	TEN
		rw	rw	rw	rw	rw	rw						rs	rw	rs

Bits	Fields	Descriptions
31:18	Reserved	Must be kept at reset value.
17:16	PFCM[1:0]	Pixel format convert mode Software set and clear. 00: Foreground memory to destination memory without pixel format convert 01: Foreground memory to destination memory with pixel format convert 10: Blending foreground and background memory to destination memory 11: Fill up destination memory with specific color These bits can NOT be written when TEN is ‘1’.
15:14	Reserved	Must be kept at reset value
13	WCFIE	Enable bit for wrong configuration interrupt Software set and clear 0: Disable configuration error interrupt 1: Enable configuration error interrupt
12	LLFIE	Enable bit for LUT loading finish interrupt Software set and clear 0: Disable LUT loading finish interrupt 1: Enable LUT loading finish interrupt
11	LACIE	Enable bit for LUT access conflict interrupt Software set and clear 0: Disable LUT access conflict interrupt 1: Enable LUT access conflict interrupt
10	TLMIE	Enable bit for transfer line mark interrupt

		Software set and clear 0: Disable transfer line mark interrupt 1: Enable transfer line mark interrupt
9	FTFIE	Enable bit for full transfer finish interrupt Software set and clear 0: Disable full transfer finish interrupt 1: Enable full transfer finish interrupt
8	TAEIE	Enable bit for transfer access error interrupt Software set and clear 0: Disable transfer access error interrupt 1: Enable transfer access error interrupt
7:3	Reserved	Must be kept at reset value
2	TST	Transfer stop Software set, software and hardware clear. 0: No effect 1: Stop the current transfer When this bit is enabled, the current transfer (including LUT automatic loading and IPA transfer) is stopped. This bit can be cleared by hardware immediately when the current transfer is disabled.
1	THU	Transfer hang up Software set, software and hardware clear. 0: No effect 1: Hang up the current transfer When this bit is enabled, the current transfer (including LUT automatic loading and IPA transfer) is hanged up. When this bit is cleared, the current transfer continues. This bit can be cleared by hardware immediately when the current transfer is disabled.
0	TEN	Transfer enable Software set, hardware clear. 0: Transfer disable 1: Transfer enable When this bit is enabled, the IPA transfer is started. This bit is automatically cleared when one of the following situations occurs: - When the TST bit is enabled to stop the current transfer. - When the transfer is fully finished. - When a wrong configuration or a transfer access error is detected. - When the foreground LUT or background LUT is being loaded (FLLEN bit in the IPA_FPCTL register or BLLEN bit in the IPA_BPCTL register is ‘1’).

35.7.2. Interrupt flag register (IPA_INTF)

Address offset: 0x04

Reset value: 0x0000 0000

This register can be accessed by byte (8-bit), half-word (16-bit) and word (32-bit).

31	30	29	28	27	26	25	24	23	22	21	20	19	18	17	16
Reserved															

15	14	13	12	11	10	9	8	7	6	5	4	3	2	1	0
Reserved										WCFIF	LLFIF	LACIF	TLMIF	FTFIF	TAEIF
										r	r	r	r	r	r

Bits	Fields	Descriptions
31:6	Reserved	Must be kept at reset value.
5	WCFIF	Wrong configuration interrupt flag Hardware set, Software cleared by enable ‘WCFIFC’ bit in the IPA_INTC register. 0: No wrong configuration is detected when IPA transfer or LUT loading is enable. 1: A wrong configuration is detected when IPA transfer or LUT loading is enable.
4	LLFIF	LUT loading finish interrupt flag Hardware set, software cleared by enable ‘LLFIFC’ bit in the IPA_INTC register. 0: No LUT loading finish is detected 1: A LUT loading finish is detected
3	LACIF	LUT access conflict interrupt flag Hardware set, software cleared by enable ‘LACIFC’ bit in the IPA_INTC register. 0: No LUT access conflict is detected. 1: A LUT access conflict is detected.
2	TLMIF	Transfer line mark interrupt flag Hardware set, software cleared by enable ‘CTCLIF’ bit in the IPA_INTC register. 0: The number of pixel transferred has not exactly reached the line mark 1: The number of pixel transferred has exactly reached the line mark
1	FTFIF	Full transfer finish interrupt flag Hardware set, software cleared by enable ‘CTFIF’ bit in the IPA_INTC register. 0: No full transfer finish is detected. 1: A full transfer finish is detected.
0	TAEIF	Transfer access error interrupt flag Hardware set, software cleared by enable ‘CTEIF’ bit in the IPA_INTC register. 0: No transfer access error is detected. 1: A transfer access error is detected.

35.7.3. Interrupt flag clear register (IPA_INTC)

Address offset: 0x08

Reset value: 0x0000 0000

This register can be accessed by byte (8-bit), half-word (16-bit) and word (32-bit).

31	30	29	28	27	26	25	24	23	22	21	20	19	18	17	16
Reserved															

15	14	13	12	11	10	9	8	7	6	5	4	3	2	1	0
Reserved										WCFIFC	LLFIFC	LACIFC	TLMIFC	FTFIFC	TAEIFC
										rc_w1	rc_w1	rc_w1	rc_w1	rc_w1	rc_w1

Bits	Fields	Descriptions
31:6	Reserved	Must be kept at reset value.
5	WCFIFC	Clear bit for wrong configuration interrupt flag Software set, hardware clear 0: No effect 1: Clear wrong configuration interrupt flag
4	LLFIFC	Clear bit for LUT loading finish interrupt flag Software set, hardware clear 0: No effect 1: Clear LUT loading finish interrupt flag
3	LACIFC	Clear bit for LUT access conflict interrupt flag Software set, hardware clear 0: No effect 1: Clear LUT access conflict interrupt flag
2	TLMIFC	Clear bit for transfer line mark interrupt flag Software set, hardware clear 0: No effect 1: Clear transfer line mark interrupt flag
1	FTFIFC	Clear bit for full transfer finish interrupt flag Software set, hardware clear 0: No effect 1: Clear full transfer finish interrupt flag
0	TAEIFC	Clear bit for transfer access error interrupt flag Software set, hardware clear 0: No effect 1: Clear transfer access error interrupt flag

35.7.4. Foreground memory base address register (IPA_FMADDR)

Address offset: 0x0C

Reset value: 0x0000 0000

This register can be accessed by byte (8-bit), half-word (16-bit) and word (32-bit).

31	30	29	28	27	26	25	24	23	22	21	20	19	18	17	16
FMADDR[31:16]															
rw															

15	14	13	12	11	10	9	8	7	6	5	4	3	2	1	0
FMADDR[15:0]															
rw															

Bits	Fields	Descriptions
31:0	FMADDR[31:0]	Foreground memory base address These bits must be aligned to 8-bit, 16-bit or 32-bit corresponding with the foreground pixel format. If foreground pixel format is ARGB8888, UYVY422, VYUY422 ,YUV420 or YVU420, these bits must be 32-bit aligned; If the foreground pixel format is RGB565, ARGB1555, ARGB4444 or AL88, these bits must be 16-bit aligned. If the above alignment rules are broken, a wrong configuration will be detected when the transfer is enable. These bits can NOT be written when TEN in the IPA_CTL register is ‘1’.

35.7.5. Foreground line offset register (IPA_FLOFF)

Address offset: 0x10

Reset value: 0x0000 0000

This register can be accessed by byte (8-bit), half-word (16-bit) and word (32-bit).

31	30	29	28	27	26	25	24	23	22	21	20	19	18	17	16
Reserved															

15	14	13	12	11	10	9	8	7	6	5	4	3	2	1	0
Reserved		FLOFF[13:0]													
		rw													

Bits	Fields	Descriptions
31:14	Reserved	Must be kept at reset value.
13:0	FLOFF[13:0]	Foreground line offset These bits indicate the number of pixel between the last pixel of the current line and the first pixel of the next line. If the foreground pixel format is A4 or L4, the FLOFF must be configured to be an even number, and if the foreground pixel format is YUV420 or YVU420, the FLOFF must be configured 4-bit alignment otherwise a wrong configuration will be detected when the transfer is enable.

These bits can NOT be written when TEN in the IPA_CTL register is ‘1’.

35.7.6. Background memory base address register (IPA_BMADDR)

Address offset: 0x14

Reset value: 0x0000 0000

This register can be accessed by byte (8-bit), half-word (16-bit) and word (32-bit).

31	30	29	28	27	26	25	24	23	22	21	20	19	18	17	16
BMADDR[31:16]															
rw															

15	14	13	12	11	10	9	8	7	6	5	4	3	2	1	0
BMADDR[15:0]															
rw															

Bits	Fields	Descriptions
31:0	BMADDR[31:0]	Background memory base address These bits must be aligned to 8-bit, 16-bit or 32-bit corresponding with the background pixel format. If background pixel format is ARGB8888, UYVY422 and VYUY422, these bits must be 32-bit aligned; If the background pixel format is RGB565, ARGB1555, ARGB4444 or AL88, these bits must be 16-bit aligned. If the above alignment rules are broken, a wrong configuration will be detected when the transfer is enable. These bits can NOT be written when TEN in the IPA_CTL register is ‘1’.

35.7.7. Background line offset register (IPA_BLOFF)

Address offset: 0x18

Reset value: 0x0000 0000

This register can be accessed by byte (8-bit), half-word (16-bit) and word (32-bit).

31	30	29	28	27	26	25	24	23	22	21	20	19	18	17	16
Reserved															

15	14	13	12	11	10	9	8	7	6	5	4	3	2	1	0
Reserved		BLOFF[13:0]													
		rw													

Bits	Fields	Descriptions
31:14	Reserved	Must be kept at reset value.
13:0	BLOFF[13:0]	Background line offset These bits indicate the number of pixel between the last pixel of the current line and the first pixel of the next line. If the background pixel format is A4 or L4, the BLOFF

must be configured to be an even number, otherwise a configuration error will be detected when the transfer is enable.

These bits can NOT be written when TEN in the IPA_CTL register is '1'.

35.7.8. Foreground pixel control register (IPA_FPCTL)

Address offset: 0x1C

Reset value: 0x0000 0000

This register can be accessed by byte (8-bit), half-word (16-bit) and word (32-bit).

31	30	29	28	27	26	25	24	23	22	21	20	19	18	17	16
FPDAV[7:0]								FIIMEN	Reserved					FAVCA[1:0]	
rw								rw						rw	

15	14	13	12	11	10	9	8	7	6	5	4	3	2	1	0
FCNP[7:0]								Reserved		FLLEN	FLPF	FPF[3:0]			
rw										rc_w1	rw	rw			

Bits	Fields	Descriptions
31:24	FPDAV[7:0]	Foreground pre-defined alpha value Software set and clear These bits define an alpha value. These bits are used to calculate the foreground alpha channel value with the alpha value read from foreground memory or foreground LUT according to the foreground alpha calculation algorithm. These bits can NOT be written when TEN in the IPA_CTL register is '1'.
23	FIIMEN	Foreground input interlace mode enable 0: Foreground input interlace mode disable 1: Foreground input interlace mode enable
22:18	Reserved	Must be kept at reset value.
17:16	FAVCA[1:0]	Foreground alpha value calculation algorithm Software set and clear 00: No effect 01: FPDAV[7:0] is selected as the foreground alpha value 10: FPDAV[7:0] multiplied by the alpha data read from foreground memory or foreground LUT divided by 255 is selected as the foreground alpha value 11: Reserved These bits can NOT be written when TEN in the IPA_CTL register is '1'.
15:8	FCNP[7:0]	Foreground LUT number of pixel Software set and clear The pixel number of foreground LUT is equal to FCNP + 1. These bits can NOT be written when FLLEN is '1'.
7:6	Reserved	Must be kept at reset value

5	FLLEN	Foreground LUT loading enable Software set, hardware clear. 0: Disable foreground LUT loading 1: Enable foreground LUT loading When this bit is enabled, the foreground LUT loading is started. This bit is automatically cleared when one of the following situations occurs: - When the TST bit is enabled - When the foreground LUT loading is finished - When a wrong configuration or a transfer error is detected - When the IPA transfer is ongoing or the background LUT is being loaded (TEN bit in the IPA_CTL register or BLLEN bit in the IPA_BPCTL register is '1').
4	FLPF	Foreground LUT pixel format Software set and clear 0: ARGB8888 1: RGB888 This bit can NOT be written when FLLEN is '1'.
3:0	FPF[3:0]	Foreground pixel format software set and clear 0000: ARGB8888 0001: RGB888 0010: RGB565 0011: ARGB1555 0100: ARGB4444 0101: L8 0110: AL44 0111: AL88 1000: L4 1001: A8 1010: A4 1011: YUV444 (1 Plane) 1100: UYVY422 (1 Plane) 1101: VYUY422 (1 Plane) 1110: YUV420 (2 Plane) 1111: YVU420 (2 Plane) These bits can NOT be written when TEN in the IPA_CTL register is '1'.

35.7.9. Foreground pixel value register (IPA_FPV)

Address offset: 0x20

Reset value: 0x0000 0000

This register can be accessed by byte (8-bit), half-word (16-bit) and word (32-bit).

31	30	29	28	27	26	25	24	23	22	21	20	19	18	17	16

Reserved	FPDRV[7:0]
	rw

15	14	13	12	11	10	9	8	7	6	5	4	3	2	1	0
FPDGV[7:0]								FPDBV[7:0]							
rw								rw							

Bits	Fields	Descriptions
31:24	Reserved	Must be kept at reset value.
23:16	FPDRV[7:0]	Foreground pre-defined red value Software set and clear When the foreground pixel format is A4 or A8, these bits are used as the foreground red value. These bits can NOT be written when TEN in the IPA_CTL register is ‘1’.
15:8	FPDGV[7:0]	Foreground pre-defined green value Software set and clear When the foreground pixel format is A4 or A8, these bits are used as the foreground green value. These bits can NOT be written when TEN in the IPA_CTL register is ‘1’.
7:0	FPDBV[7:0]	Foreground pre-defined blue value Software set and clear When the foreground pixel format is A4 or A8, these bits are used as the foreground blue value. These bits can NOT be written when TEN in the IPA_CTL register is ‘1’.

35.7.10. Background pixel control register (IPA_BPCTL)

Address offset: 0x24

Reset value: 0x0000 0000

This register can be accessed by byte (8-bit), half-word (16-bit) and word (32-bit).

31	30	29	28	27	26	25	24	23	22	21	20	19	18	17	16
BPDAV[7:0]								Reserved						BAVCA[1:0]	
rw														rw	

15	14	13	12	11	10	9	8	7	6	5	4	3	2	1	0
BCNP[7:0]								Reserved		BLLEN	BLPF	BPF[3:0]			
rw										rc_w1	rw	rw			

Bits	Fields	Descriptions
31:24	BPDAV[7:0]	Background pre- defined alpha value Software set and clear These bits define an alpha value. These bits are used to calculate the background alpha channel value with the alpha value read from background memory or

		background LUT according to the background alpha calculation algorithm. These bits can NOT be written when TEN in the IPA_CTL register is ‘1’.
23:18	Reserved	Must be kept at reset value.
17:16	BAVCA[1:0]	Background alpha value calculation algorithm Software set and clear 00: No effect 01: BPDAV[7:0] is selected as the background alpha value 10: BPDAV[7:0] multiplied by the alpha data read from background memory or background LUT divided by 255 is selected as the background alpha value 11: Reserved These bits can NOT be written when TEN in the IPA_CTL register is ‘1’.
15:8	BCNP[7:0]	Background LUT number of pixel Software set and clear The number of pixel of background LUT is equal to BCNP + 1. These bits can NOT be written when BLLEN is ‘1’.
7:6	Reserved	Must be kept at reset value
5	BLLEN	Background LUT loading enable Software set, hardware clear. 0: Background LUT loading disable 1: Background LUT loading enable This bit is automatically cleared when one of the following situations occurs: - When the TST bit is enabled - When the background LUT loading is finished - When a wrong configuration or a transfer error is detected - When the IPA transfer is ongoing or the foreground LUT is being loaded (TEN bit in the IPA_CTL register or FLLEN bit in the IPA_FPCTL register is ‘1’).
4	BLPF	Background LUT pixel format Software set and clear 0: ARGB8888 1: RGB888 This bit can NOT be written when BLLEN is ‘1’.
3:0	BPF[3:0]	Background pixel format software set and clear 0000: ARGB8888 0001: RGB888 0010: RGB565 0011: ARGB1555 0100: ARGB4444 0101: L8 0110: AL44

0111: AL88

1000: L4

1001: A8

1010: A4

1011 ~ 1111: Reserved

These bits can NOT be written when TEN in the IPA_CTL register is '1'.

35.7.11. Background pixel value register (IPA_BPV)

Address offset: 0x28

Reset value: 0x0000 0000

This register can be accessed by byte (8-bit), half-word (16-bit) and word (32-bit).

31	30	29	28	27	26	25	24	23	22	21	20	19	18	17	16
Reserved								BPDRV[7:0]							
								rw							

15	14	13	12	11	10	9	8	7	6	5	4	3	2	1	0
BPDGV[7:0]								BPDBV[7:0]							
rw								rw							

Bits	Fields	Descriptions
31:24	Reserved	Must be kept at reset value.
23:16	BPDRV[7:0]	Background pre-defined red value Software set and clear When the background pixel format is A4 or A8, these bits are used as the background red value. These bits can NOT be written when TEN in the IPA_CTL register is '1'.
15:8	BPDGV[7:0]	Background pre-defined green value Software set and clear When the background pixel format is A4 or A8, these bits are used as the background green value. These bits can NOT be written when TEN in the IPA_CTL register is '1'.
7:0	BPDBV[7:0]	Background pre-defined blue value Software set and clear When the background pixel format is A4 or A8, these bits are used as the background blue value. These bits can NOT be written when TEN in the IPA_CTL register is '1'.

35.7.12. Foreground LUT memory base address register (IPA_FLMADDR)

Address offset: 0x2C

Reset value: 0x0000 0000

This register can be accessed by byte (8-bit), half-word (16-bit) and word (32-bit).

31	30	29	28	27	26	25	24	23	22	21	20	19	18	17	16
FLMADDR[31:16]															
rw															

15	14	13	12	11	10	9	8	7	6	5	4	3	2	1	0
FLMADDR[15:0]															
rw															

Bits	Fields	Descriptions
31:0	FLMADDR[31:0]	Foreground LUT memory base address Software set and clear The address must be aligned to 8-bit, 16-bit or 32-bit corresponding with the foreground LUT pixel format. If foreground LUT pixel format is ARGB8888, these bits must be 32-bit aligned. If the above alignment rule is broken, a wrong configuration will be detected when the foreground LUT loading is enable. These bit can NOT be written when FLLEN in the IPA_FPCTL register is '1'.

35.7.13. Background LUT memory base address register (IPA_BLMADDR)

Address offset: 0x30

Reset value: 0x0000 0000

This register can be accessed by byte (8-bit), half-word (16-bit) and word (32-bit).

31	30	29	28	27	26	25	24	23	22	21	20	19	18	17	16
BLMADDR[31:16]															
rw															

15	14	13	12	11	10	9	8	7	6	5	4	3	2	1	0
BLMADDR[15:0]															
rw															

Bits	Fields	Descriptions
31:0	BLMADDR[31:0]	Background LUT memory base address Software set and clear The address must be aligned to 8-bit, 16-bit or 32-bit corresponding with the background LUT pixel format. If background LUT pixel format is ARGB8888, these bits must be 32-bit aligned. If the above alignment rule is broken, a wrong configuration will be detected when the background LUT loading is enable. These bit can NOT be written when BLLEN in the IPA_BPCTL register is '1'.

35.7.14. Destination pixel control register (IPA_DPCTL)

Address offset: 0x34

Reset value: 0x0000 0000

This register can be accessed by byte (8-bit), half-word (16-bit) and word (32-bit).

31	30	29	28	27	26	25	24	23	22	21	20	19	18	17	16
Reserved												VERDEC[1:0]		HORDEC[1:0]	
												rw		rw	

15	14	13	12	11	10	9	8	7	6	5	4	3	2	1	0
Reserved						ROT[1:0]		Reserved					DPF[2:0]		
						rw							rw		

Bits	Fields	Descriptions
31:20	Reserved	Must be kept at reset value.
19:18	VERDEC[1:0]	Verticle pre decimation filter control 00: Disable the pre-decimation filter 01: Down scaling factors of decimation filter is 2 10: Down scaling factors of decimation filter is 4 11: Down scaling factors of decimation filter is 8
17:16	HORDEC[1:0]	Horizontal pre decimation filter control 00: Disable the pre-decimation filter 01: Down scaling factors of decimation filter is 2 10: Down scaling factors of decimation filter is 4 11: Down scaling factors of decimation filter is 8
15:10	Reserved	Must be kept at reset value.
9:8	ROT[1:0]	Indicates the clockwise rotation to be applied at the output. 00: No Rotation 01: Rotate 90 degree 10: Rotate 180 degree 11: Rotate 270 degree
7:3	Reserved	Must be kept at reset value.
2:0	DPF[2:0]	Destination pixel format Software set and clear 000: ARGB8888 001: RGB888 010: RGB565 011: ARGB1555 100: ARGB4444 101~111: Reserved These bits can NOT be written when TEN in the IPA_CTL register is ‘1’.

35.7.15. Destination pixel value register (IPA_DPV)

Address offset: 0x38

Reset value: 0x0000 0000

This register can be accessed by byte (8-bit), half-word (16-bit) and word (32-bit).

31	30	29	28	27	26	25	24	23	22	21	20	19	18	17	16
DPDAV[7:0]								DPDRV[7:0]							
MEANINGLESS								DPDRV[7:0]							
MEANINGLESS															
MEANINGLESS															
MEANINGLESS															

rw

15	14	13	12	11	10	9	8	7	6	5	4	3	2	1	0
DPDGV[7:0]								DPDBV[7:0]							
DPDGV[7:0]								DPDBV[7:0]							
DPDRV[4:0]					DPDGV[5:0]						DPDBV[4:0]				
DPDAV	DPDRV[4:0]					DPDGV[4:0]					DPDBV[4:0]				
DPDAV[3:0]				DPDRV[3:0]				DPDGV[3:0]				DPDBV[3:0]			

rw

When the destination pixel format is ARGB8888, the FIRST row is valid.

Bits	Fields	Descriptions
31:24	DPDAV[7:0]	Destination pre-defined alpha value Software set and clear When IPA is configured to fill up destination memory with specific color, these bits are used as the destination alpha value. These bits can NOT be written when TEN in the IPA_CTL register is ‘1’.
23:16	DPDRV[7:0]	Destination pre-defined red value Software set and clear When IPA is configured to fill up destination memory with specific color, these bits are used as the destination red value. These bits can NOT be written when TEN in the IPA_CTL register is ‘1’.
15:8	DPDGV[7:0]	Destination pre-defined green value Software set and clear When IPA is configured to fill up destination memory with specific color, these bits are used as the destination green value. These bits can NOT be written when TEN in the IPA_CTL register is ‘1’.
7:0	DPDBV[7:0]	Destination pre-defined blue value Software set and clear When IPA is configured to fill up destination memory with specific color, these bits are used as the destination blue value. These bits can NOT be written when TEN in the IPA_CTL register is ‘1’.

When the destination pixel format is RGB888, the SECOND row is valid.

Bits	Fields	Descriptions
31:24	Meaningless	These bit can be set and cleared by software, but these bits have no meaning when the destination pixel format is RGB888.
23:16	DPDRV[7:0]	Destination pre-defined red value Software set and clear When IPA is configured to fill up destination memory with specific color, these bits are used as the destination red value. These bits can NOT be written when TEN in the IPA_CTL register is '1'.
15:8	DPDGV[7:0]	Destination pre-defined green value Software set and clear When IPA is configured to fill up destination memory with specific color, these bits are used as the destination green value. These bits can NOT be written when TEN in the IPA_CTL register is '1'.
7:0	DPDBV[7:0]	Destination pre-defined blue value Software set and clear When IPA is configured to fill up destination memory with specific color, these bits are used as the destination blue value. These bits can NOT be written when TEN in the IPA_CTL register is '1'.

When the destination pixel format is RGB565, the THIRD row is valid.

Bits	Fields	Descriptions
31:16	Meaningless	These bit can be set and cleared by software, but these bits have no meaning when the destination pixel format is RGB565.
15:11	DPDRV[4:0]	Destination pre-defined red value Software set and clear When IPA is configured to fill up destination memory with specific color, these bits are used as the destination red value. These bits can NOT be written when TEN in the IPA_CTL register is '1'.
10:5	DPDGV[5:0]	Destination pre-defined green value Software set and clear When IPA is configured to fill up destination memory with specific color, these bits are used as the destination green value. These bits can NOT be written when TEN in the IPA_CTL register is '1'.
4:0	DPDBV[4:0]	Destination pre-defined blue value Software set and clear When IPA is configured to fill up destination memory with specific color, these bits are used as the destination blue value. These bits can NOT be written when TEN in the IPA_CTL register is '1'.

When the destination pixel format is ARGB1555, the FOURTH row is valid.

Bits	Fields	Descriptions
31:16	Meaningless	These bit can be set and cleared by software, but these bits have no meaning when the destination pixel format is ARGB1555.
15	DPDAV	Destination pre-defined alpha value Software set and clear When IPA is configured to fill up destination memory with specific color, these bits are used as the destination alpha value. These bits can NOT be written when TEN in the IPA_CTL register is '1'.
14:10	DPDRV[4:0]	Destination pre-defined red value Software set and clear When IPA is configured to fill up destination memory with specific color, these bits are used as the destination red value. These bits can NOT be written when TEN in the IPA_CTL register is '1'.
9:5	DPDGV[4:0]	Destination pre-defined green value Software set and clear When IPA is configured to fill up destination memory with specific color, these bits are used as the destination green value. These bits can NOT be written when TEN in the IPA_CTL register is '1'.
4:0	DPDBV[4:0]	Destination pre-defined blue value Software set and clear When IPA is configured to fill up destination memory with specific color, these bits are used as the destination blue value. These bits can NOT be written when TEN in the IPA_CTL register is '1'.

When the destination pixel format is ARGB4444, the FIFTH row is valid.

Bits	Fields	Descriptions
31:16	Meaningless	These bit can be set and cleared by software, but these bits have no meaning when the destination pixel format is ARGB4444.
15:12	DPDAV[3:0]	Destination pre-defined alpha value Software set and clear When IPA is configured to fill up destination memory with specific color, these bits are used as the destination alpha value. These bits can NOT be written when TEN in the IPA_CTL register is '1'.
11:8	DPDRV[3:0]	Destination pre-defined red value Software set and clear When IPA is configured to fill up destination memory with specific color, these bits are used as the destination red value. These bits can NOT be written when TEN in the IPA_CTL register is '1'.
7:4	DPDGV[3:0]	Destination pre-defined green value

		Software set and clear When IPA is configured to fill up destination memory with specific color, these bits are used as the destination green value. These bits can NOT be written when TEN in the IPA_CTL register is ‘1’.
3:0	DPDBV[3:0]	Destination pre-defined blue value Software set and clear When IPA is configured to fill up destination memory with specific color, these bits are used as the destination blue value. These bits can NOT be written when TEN in the IPA_CTL register is ‘1’.

35.7.16. Destination memory base address register (IPA_DMADDR)

Address offset: 0x3C

Reset value: 0x0000 0000

This register can be accessed by byte (8-bit), half-word (16-bit) and word (32-bit).

31	30	29	28	27	26	25	24	23	22	21	20	19	18	17	16
DMADDR[31:16]															
rw															

15	14	13	12	11	10	9	8	7	6	5	4	3	2	1	0
DMADDR[15:0]															
rw															

Bits	Fields	Descriptions
31:0	DMADDR[31:0]	Destination memory base address software set and clear The address must be aligned to 8-bit, 16-bit or 32-bit corresponding with the destination pixel format. If the destination pixel format is ARGB8888, these bits must be 32-bit aligned; If the destination pixel format is RGB565, ARGB1555 or ARGB4444, these bits must be 16-bit aligned. If the above alignment rules are broken, a wrong configuration will be detected when the transfer is enable. These bit can NOT be written when TEN in the IPA_CTL register is ‘1’.

35.7.17. Destination line offset register (IPA_DLOFF)

Address offset: 0x40

Reset value: 0x0000 0000

This register can be accessed by byte (8-bit), half-word (16-bit) and word (32-bit).

31	30	29	28	27	26	25	24	23	22	21	20	19	18	17	16
Reserved															

15	14	13	12	11	10	9	8	7	6	5	4	3	2	1	0

Reserved	DLOFF[13:0]
	rw

Bits	Fields	Descriptions
31:14	Reserved	Must be kept at reset value.
13:0	DLOFF[13:0]	Destination line offset software set and clear These bits indicate the number of pixel between the last pixel of the current line and the first pixel of the next line. When PFCM in the IPA_CTL register is configured to '00', if the foreground pixel format is A4 or L4, these bits must be configured to be an even number, or a wrong configuration will be detected when the transfer is enable. These bits can NOT be written when TEN in the IPA_CTL register is '1'.

35.7.18. Image size register (IPA_IMS)

Address offset: 0x44

Reset value: 0x0000 0000

This register can be accessed by byte (8-bit), half-word (16-bit) and word (32-bit).

31	30	29	28	27	26	25	24	23	22	21	20	19	18	17	16
Reserved		WIDTH[13:0]													
		rw													

15	14	13	12	11	10	9	8	7	6	5	4	3	2	1	0
HEIGHT[15:0]															
rw															

Bits	Fields	Descriptions
31:30	Reserved	Must be kept at reset value.
29:16	WIDTH[13:0]	Width of the image to be processed Software set and clear These bits signify the number of pixels per line. If the foreground or background pixel format is A4 or L4, these bits must be configured to be an even number, otherwise a wrong configuration will be detected when the transfer is enable. These bits can NOT be written when TEN in the IPA_CTL register is '1'.
15:0	HEIGHT[15:0]	Height of the image to be processed Software set and clear These bits specify the number of lines of image to be processed. These bits can NOT be written when TEN in the IPA_CTL register is '1'.

35.7.19. Line mark register (IPA_LM)

Address offset: 0x48

Reset value: 0x0000 0000

This register can be accessed by byte (8-bit), half-word (16-bit) and word (32-bit).

31	30	29	28	27	26	25	24	23	22	21	20	19	18	17	16
Reserved															

15	14	13	12	11	10	9	8	7	6	5	4	3	2	1	0
LM[15:0]															
rw															

Bits	Fields	Descriptions
31:16	Reserved	Must be kept at reset value.
15:0	LM[15:0]	line mark Software set and clear These bits define a line number to signify the transfer level. An interrupt flag is asserted as soon as the last pixel of the marked line has been written into the destination memory. These bits can NOT be written when TEN in the IPA_CTL register is ‘1’.

35.7.20. Inter-timer control register (IPA_ITCTL)

Address offset: 0x4C

Reset value: 0x0000 0000

This register can be accessed by byte (8-bit), half-word (16-bit) and word (32-bit).

31	30	29	28	27	26	25	24	23	22	21	20	19	18	17	16
Reserved															

15	14	13	12	11	10	9	8	7	6	5	4	3	2	1	0
NCCI[7:0]								Reserved							ITEN
rw															rw

Bits	Fields	Descriptions
31:16	Reserved	Must be kept at reset value.
15:8	NCCI[7:0]	Number of clock cycles interval Software set and clear These bits have no meaning if ITEN is ‘0’. If the ITEN is ‘1’, two consecutive AHB commands are issued with an interval equal to or greater than these bits.
7:1	Reserved	Must be kept at reset value.

0	ITEN	Inter-timer enable An inter-timer is implemented to reduce the AHB bus bandwidth usage of IPA. 0: Disable inter-timer 1: Enable inter-timer

35.7.21. Bilinear scaling control register (IPA_BSCTL)

Address offset: 0x50

Reset value: 0x1000 1000

This register can be accessed by byte (8-bit), half-word (16-bit) and word (32-bit).

31	30	29	28	27	26	25	24	23	22	21	20	19	18	17	16
Reserved		YSCALE[13:0]													
		rw													

15	14	13	12	11	10	9	8	7	6	5	4	3	2	1	0
Reserved		XSCALE[13:0]													
		rw													

Bits	Fields	Descriptions
31:30	Reserved	Must be kept at reset value.
29:16	YSCALE[13:0]	It consists of 2-bit integer and 12-bit fractional, representing the Y scaling factor for the Foreground. **Note:** The maximum down scaling factor is 1/2 and the maximum up scaling factor is 2^12.
15:14	Reserved	Must be kept at reset value.
13:0	XSCALE[13:0]	It consists of 2-bit integer and 12-bit fractional, representing of the X scaling factor for the Foreground. **Note:** The maximum down scaling factor is 1/2 and the maximum up scaling factor is 2^12.

35.7.22. Scaling destination image size register (IPA_DIMS)

Address offset: 0x54

Reset value: 0x0000 0000

This register can be accessed by byte (8-bit), half-word (16-bit) and word (32-bit).

31	30	29	28	27	26	25	24	23	22	21	20	19	18	17	16
Reserved		DWIDTH[13:0]													
		rw													

15	14	13	12	11	10	9	8	7	6	5	4	3	2	1	0
DHEIGHT[15:0]															
rw															

Bits	Fields	Descriptions
31:30	Reserved	Must be kept at reset value.
29:16	DWIDTH[13:0]	Width of the image to be processed Software set and clear. These bits signify the number of pixels per line. If the foreground or background pixel format is A4 or L4, these bits must be configured to be an even number, otherwise a wrong configuration will be detected when the transfer is enable. These bits can NOT be written when TEN in the IPA_CTL register is '1'. Set these bits when scaling.
15:0	DHEIGHT[15:0]	Height of the image to be processed Software set and clear These bits specify the number of lines of image to be processed. These bits can NOT be written when TEN in the IPA_CTL register is '1'. Set these bits when scaling.

35.7.23. Foreground even frame/UV memory base address register (IPA_EF_UV_MADDR)

Address offset: 0x5C

Reset value: 0x0000 0000

This register can be accessed by byte (8-bit), half-word (16-bit) and word (32-bit).

31	30	29	28	27	26	25	24	23	22	21	20	19	18	17	16
EFUVMADDR[31:16]															
rw															

15	14	13	12	11	10	9	8	7	6	5	4	3	2	1	0
EFUVMADDR[15:0]															
rw															

Bits	Fields	Descriptions
31:0	EFUVMADDR[31:0]	Foreground Even Frame/UV memory base address These bits must be aligned to 8-bit, 16-bit or 32-bit corresponding with the foreground pixel format. If foreground pixel format is ARGB8888,UYVY422 or VYUY422, these bits must be 32-bit aligned; If the foreground pixel format is YUV420, YVU420, RGB565, ARGB1555, ARGB4444 or AL88, these bits must be 16-bit aligned. If the above alignment rules are broken, a wrong configuration will be detected when the transfer is enable. These bits can NOT be written when TEN in the IPA_CTL register is '1'.

35.7.24. Color space conversion coefficient configure register 0 (IPA_CSCC_CFG0)

Address offset: 0x60

Reset value: 0x0400 0000

This register can be accessed by byte (8-bit), half-word (16-bit) and word (32-bit).

31	30	29	28	27	26	25	24	23	22	21	20	19	18	17	16
CONVMOD	Reserved		C0[10:0]											UVOFF[8:7]	
rw								rw						rw	

15	14	13	12	11	10	9	8	7	6	5	4	3	2	1	0
UVOFF[6:0]							YOFF[8:0]								
rw							rw								

Bits	Fields	Descriptions
31	CONVMOD	Color space convert mode 0: Convert YUV to RGB, the UV value are 8-bit two's compliment 1: Convert YCbCr to RGB, the CbCr value are 8-bit unsigned number
30:29	Reserved	Must be kept at reset value.
28:18	C0[10:0]	Y multiplier coefficient. For YUV, it is typically 0x100 (1.000). For YCbCr, it is typically 0x12A (1.164).
17:9	UVOFF[8:0]	Phase offset implicited for UV/CbCr data, which is used for YUV/YCbCr to RGB conversion. For YUV, it is typically 0x000. For YCbCr, it is typically 0x180 (-128).
8:0	YOFF[8:0]	Amplitude offset implicited for Y data. For YUV, it is typically 0. For YCbCr, it is typically 0x1F0 (-16).

35.7.25. Color space conversion coefficient configure register 1 (IPA_CSCC_CFG1)

Address offset: 0x64

Reset value: 0x0123 0208

This register can be accessed by byte (8-bit), half-word (16-bit) and word (32-bit).

31	30	29	28	27	26	25	24	23	22	21	20	19	18	17	16
Reserved					C1[10:0]										
										rw					

15	14	13	12	11	10	9	8	7	6	5	4	3	2	1	0
Reserved					C4[10:0]										
										rw					

Bits	Fields	Descriptions
31:27	Reserved	Must be kept at reset value.
26:16	C1[10:0]	V/Cr Red multiplier coefficient. For YUV, it is typically 0x123 (1.140). For YCbCr it is typically 0x198 (1.596).
15:11	Reserved	Must be kept at reset value.
10:0	C4[10:0]	U/Cb Blue multiplier coefficient. For YUV, it is typically 0x208 (2.032). For YCbCr it is typically 0x204 (2.017).

35.7.26. Color space conversion coefficient configure register 2 (IPA_CSCC_CFG2)

Address offset: 0x68

Reset value: 0x076B 079C

This register can be accessed by byte (8-bit), half-word (16-bit) and word (32-bit).

31	30	29	28	27	26	25	24	23	22	21	20	19	18	17	16
Reserved					C2[10:0]										
										rw					

15	14	13	12	11	10	9	8	7	6	5	4	3	2	1	0
Reserved					C3[10:0]										
										rw					

Bits	Fields	Descriptions
31:27	Reserved	Must be kept at reset value.
26:16	C2[10:0]	V/Cr Green multiplier coefficient. For YUV, it is typically 0x76B (-0.581). For YCbCr, it is typically 0x730 (-0.813).
15:11	Reserved	Must be kept at reset value.
10:0	C3[10:0]	U/Cb Green multiplier coefficient. For YUV, it is typically 0x79C (-0.394). For YCbCr, it is typically 0x79C (-0.392).

36. Secure digital input/output interface (SDIO)

36.1. Overview

The secure digital input/output interface (SDIO) defines the SD, SD I/O and embedded MultiMediaCard (*e*•MMC) host interface, which provides command/data transfer between the AHB system bus and SD memory cards, SD I/O cards and *e*•MMC.

The supported SD memory card and SD I/O card system specifications are defined in the SD card Association website at ***www.sdcard.org***.

The supported embedded Multimedia Card system specifications are defined through the Multimedia Card Association website at ***www.jedec.org***, published by the JEDEC SOLID STATE TECHNOLOGY ASSOCIATION.

36.2. Characteristics

The SDIO features include the following:

- ***e*•MMC:** Support for embedded Multimedia Card System Specification Version 4.51 (and previous versions) Card and five different data bus modes: 1-bit (default), 4-bit (SDR/DDR) and 8-bit(SDR/DDR).
- **SD Card:** Full support for *SD Memory Card Specifications Version 3.0.*
- **SD I/O:** Full support for *SD I/O Card Specification Version 3.0* card and three different data bus modes: 1-bit (default) and 4-bit (SDR/DDR).
- 104MHz data transfer frequency and 8-bit data transfer mode.
- Interrupt and DMA request to processor.
- Support DDR double data rate signaling.

Note: SDIO supports only one SD card, SD I/O card or *e*•MMC at any one time and a stack of e•MMC V4.51 or previous.

There are two SDIO interfaces, and the implementation is shown in ***Table 36-1. 2 SDIOs***.

Table 36-1. 2 SDIOs

SDIO features	SDIO0	SDIO1
Delay module (SDR104, HS200)	+	+
SDIO_CLKIN	+	-
SDIO_CMDDIR, SDIO_DAT0DIR, SDIO_DAT123DIR	+	-
MDMA command end, MDMA data transfer end, MDMA buffer end	+	-

Note: "-" means no support; "+" means support.

36.3. SDIO function overview

36.3.1. SDIO bus topology

After a power-on reset, the host must initialize the card by a special message-based bus protocol.

Each message is represented by one of the following tokens:

Command: a command is a token which starts an operation. A command is sent from the host to a card. A command is transferred serially on the CMD line.

Response: a response is a token which is sent from the card to the host as an answer to a previously received command. A response is transferred serially on the CMD line.

Data: data can be transferred from the card to the host or vice versa. Data is transferred via the data lines. The number of data lines used for the data transfer can be 1(DAT0), 4(DAT0-DAT3) or 8(DAT0-DAT7).

The structure of commands, responses and data blocks is described in ***SDIO function overview*** One data transfer is a bus operation.

There are different types of operations. Addressed operations always contain a command and a response token. In addition, some operations have a data token; the others transfer their information directly within the command or response structure. In this case no data token is present in an operation. The bits on the DAT0-DAT7 and CMD lines are transferred synchronous to the host clock.

Three types of data transfer commands are defined:

- Stream commands: These commands initiate a continuous data stream; they are terminated only when a stop command follows on the CMD line. This mode reduces the command overhead to an absolute minimum (only *e*•MMC supports).
- Block-oriented commands: These commands send a data block successfully by CRC bits. Both read and write operations allow either single or multiple block transmission. A multiple block transmission is terminated when a stop command follows on the CMD line similarly to the sequential read.
- Multibyte mode: Single data block with block size range 1-512 bytes. (only SD/SD I/O supports)

The basic transaction on the bus is the command/response transaction (refer to ***Figure 36-1. SDIO "no response" and "no data" operations***). This type of bus transaction transfers their information directly within the command or response structure. In addition, some operations

have a data token. Data transfers to/from the Card are done in blocks.

Figure 36-1. SDIO "no response" and "no data" operations

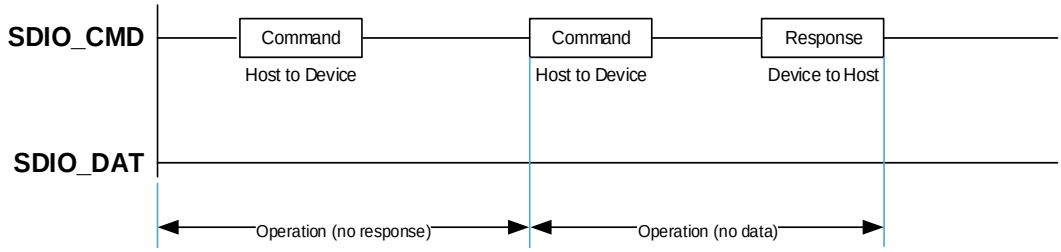

Note that the Multiple Block operation mode is faster than Single Block operation. A multiple block transmission is terminated when a stop command follows on the CMD line. Data transfer can be configured by the host to use single or multiple data lines. ***Figure 36-2. SDIO multiple blocks read operation*** is the multiple blocks read operation and ***Figure 36-3. SDIO multiple blocks write operation*** is the multiple block write operation. The block write operation uses a simple busy signal of the write operation duration on the data (DAT0) line.

Figure 36-2. SDIO multiple blocks read operation

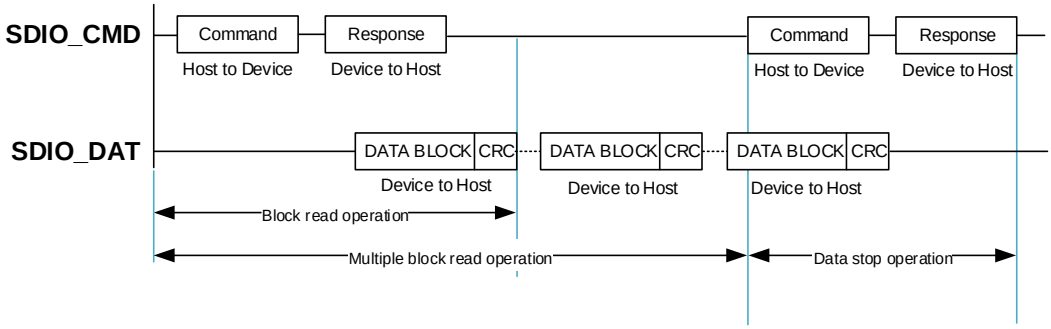

Figure 36-3. SDIO multiple blocks write operation

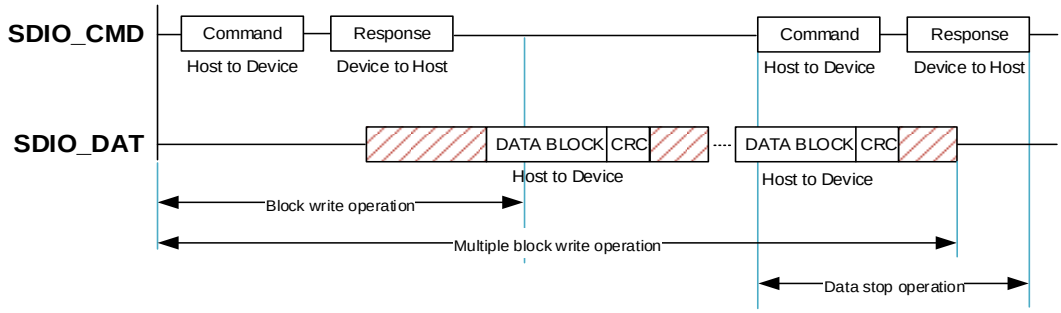

Data transfers to/from SD memory cards and SD I/O cards (both IO only card and combo card) are done in data blocks. Data transfers to/from e•MMC are done in data blocks or streams. ***Figure 36-4. SDIO sequential read operation*** and ***Figure 36-5. SDIO sequential***

write operation are the stream read and write operation.

Figure 36-4. SDIO sequential read operation

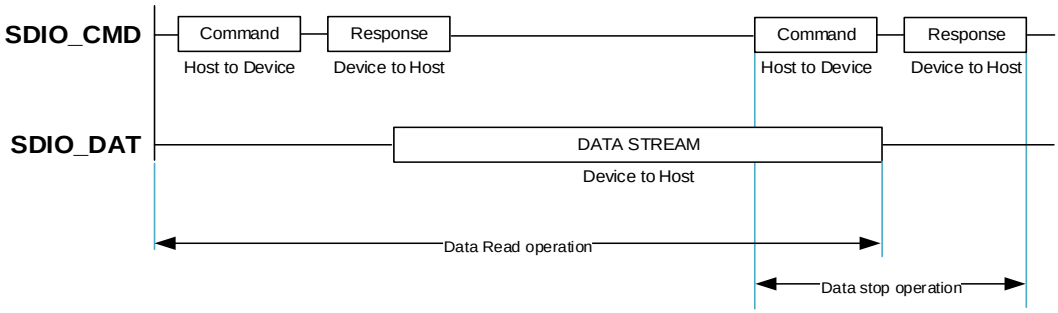

Figure 36-5. SDIO sequential write operation

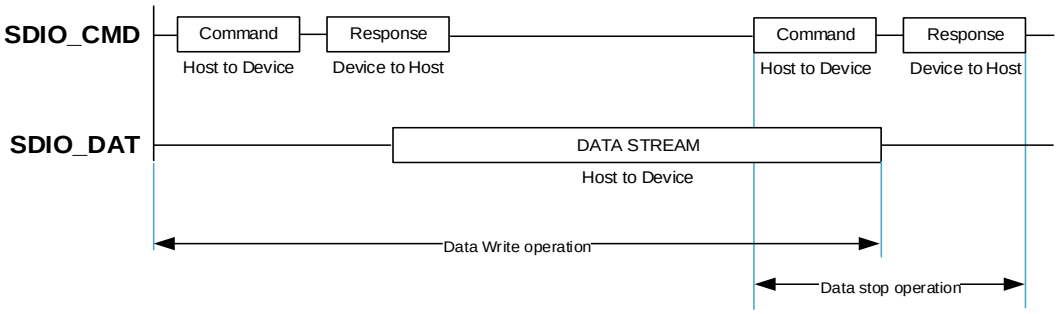

36.3.2. SDIO operation modes

Table 36-2. SDIO operation modes for SD & SD I/O card

Bus Speed modes	Max Bus Speed [Mbyte/s]	Max Clock frequency [MHz]	Signal Voltage [V]
DS	12.5	25	3.3
HS	25	50	3.3
SDR12	12.5	25	1.8
SDR25	25	50	1.8
DDR50	50	50	1.8
SDR50	50	100	1.8
SDR104	104	208	1.8

Table 36-3. SDIO operation modes for *e*•MMC card

Bus Speed modes	Max Bus Speed [Mbyte/s]	Max Clock frequency [MHz]	Signal Voltage [V]
Backward compatible	26	26	3/1.8
HS SDR	52	52	3/1.8
HS DDR	104	52	3/1.8
HS200	200	200	1.8

Note: 1. DS (Default Speed), HS (High Speed). 2. SDR (single data rate signaling), DDR (double data rate signaling). 3. The SD/SD I/O card max bus speed with 4-bit bus width, and

the *e*•MMC max bus speed with 8-bit bus width. 4. Maximum frequency depending on maximum allowed input/output speed. 5. The SDR104 and HS200 mode requires Delay module (CPDM) support using sampling point tuning. The use of delay module for SDR50 mode is optional.

36.3.3. Block diagram

The following figure ***Figure 36-6. SDIO block diagram*** shows the SDIO structure. There have three main parts:

- The SDIO adapter block consists of control unit which manage clock, command unit which manage command transfer, data unit which manage data transfer.
- The AHB slave interface block contains access registers by AHB bus, contains FIFO unit which is data FIFO used for data transfer, and generates interrupt and DMA request signals.
- The internal DMA (IDMA) block with its AHB master interface.

Figure 36-6. SDIO block diagram

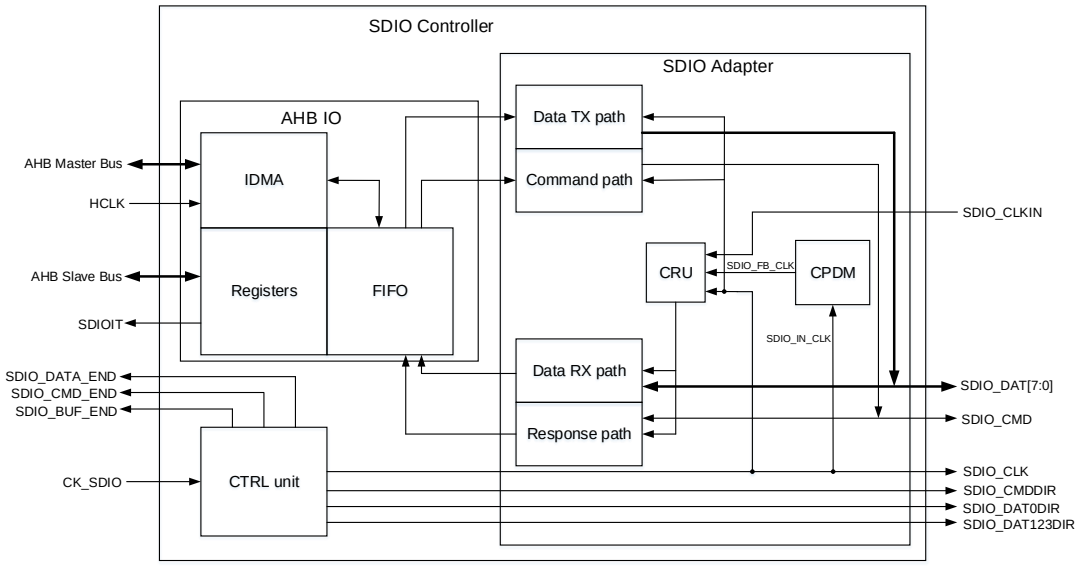

36.3.4. SDIO pins and internal signals

Table 36-4. SDIO internal input/output singnals

Signal name	Signal type	Description
CK_SDIO	I	SDIO kernel clock
HCLK	I	AHB clock
SDIOIT	O	SDIO global interrupt
SDIO_CMD_END	O	SDIO command end trigger for MDMA
SDIO_DATA_END	O	SDIO data end trigger for MDMA
SDIO_BUF_END	O	SDIO internal DMA buffer end trigger for MDMA
SDIO_IN_CLK	I	The card feedback clock signal is connected to the SDIO_CLK

Signal name	Signal type	Description
		pin (for DS/HS modes).
SDIO_FB_CLK	I	The card tuned feedback clock signal after CPDM delay module (for DDR50, SDR50, SDR104, HS200).

Table 36-5. SDIO pins functions

Signal name	Signal type	Description
SDIO_CLK	O	Clock to SD/SD I/O/*e*•MMC card
SDIO_CLKIN	I	Clock feedback from an external driver for card. (for SDR12, SDR25, SDR50, DDR50)
SDIO_CMD	I/O	Bidirectional command/response signal
SDIO_CMDDIR	O	Direction indication for the SDIO_CMD signal
SDIO_DAT[7:0]	I/O	Data input/output for data lines DAT[7:0]
SDIO_DAT0DIR	O	Direction indication for the SDIO_DAT0 data line
SDIO_DAT123DIR	O	Direction indication for the data lines SDIO_DAT[3:1]

Note: I: input; O: output.

36.3.5. General description

The SDIO_DAT[7:0] lines have different operating modes:

- When the card is powered on, it uses 1-bit(SDIO_DAT0) data bus by default, and can be modified by register later.
- For an SD or an SD I/O card, 1-bit (SDIO_DAT0) or 4-bit (SDIO_DAT [3:0]) can be used. All data lines operate in push-pull mode.
- For an *e*•MMC, 1-bit (SDIO_DAT0), 4-bit (SDIO_DAT[3:0]) or 8-bit (SDIO_DAT[7:0]) data bus widths can be used.

To allow the connection of a voltage switch transceiver, the I/O direction signals are used to indicates the direction of data flow on the data lines. The SDIO_DAT0DIR signal indicates the I/O direction for the SDIO_DAT0 data line, the SDIO_DAT123DIR for the SDIO_DAT[3:1] data lines, and the direction of data flow on the SDIO_CMD line is indicated with the I/O direction signal SDIO_CMDDIR. SDIO_CMD only operates in push-pull mode.

SDIO_CLK clock to the card originates from CK_SDIO:

- If the CK_SDIO clock has 50% duty cycle, it can be used even DIV = 0.
- If the CK_SDIO duty cycle is not 50%, the DIV > 0 must satisfy.
- The phase relation between the SDIO_CMD/SDIO_DAT[7:0] outputs and the SDIO_CLK can be selected through the CLKEDGE bit. The phase relation depends on the DIV, CLKEDGE, and DRSEL settings. Refer to ***Table 36-6. SDIO CMD and data phase selection.***

Table 36-6. SDIO CMD and data phase selection

DIV	DRSE	CLKED	SDIO_CLK	CMD out	Data out

	L	GE			
= 0	-	-	= CK_SDIO	generated on CK_SDIO falling edge	
> 0	0	0	generated on CK_SDIO rising edge	generated on CK_SDIO falling edge succeeding the SDIO_CLK rising edge.	
> 0	0	1		generated on the same CK_SDIO rising edge that generates the SDIO_CLK falling edge.	
> 0	1	0	generated on CK_SDIO rising edge	generated on CK_SDIO falling edge succeeding the SDIO_CLK rising edge.	generated on CK_SDIO falling edge succeeding a SDIO_CLK edge.
> 0	1	1		generated on the same CK_SDIO rising edge that generates the SDIO_CLK falling edge.	

By default, SDIO is selected SDIO_IN_CLK feedback clock input samples the incoming data in the SDIO receiving path.It is derived from the SDIO_CLK pin. For tuning the phase of the sampling clock to adapt to the timing of the received data, the CPDM delay module on the device can be connected to the SDIO_FB_CLK clock signal and the SDIO_IN_CLK. Then select the input of SDIO_FB_CLK clock for the receive path to use the phase adjusted sampling clock for the incoming data. This is what SDR50/DDR50/SDR104/HS200 working mode must meet.

The SDIO_CLKIN feedback clock input signal can be selected to sample the received data, when using an external driver (voltage switching transceiver).

For an SD /SD I/O/ *e*•MMC card, the clock frequency can vary from 0 to 208 MHz (limited by maximum input/output speed).

Depending on the selected bus mode (SDR or DDR), one or two bits are transferred on SDIO_DAT[7:0] lines per clock cycle. The SDIO_CMD line transfers only one bit per clock cycle.

36.3.6. SDIO adapter

The SDIO adapter contains control unit, command unit and data unit, and generates signals to cards. The signals is descript bellow:

SDIO_CLK: The SDIO_CLK is the clock provided to the card. Each cycle of this signal directs a one bit transfer on the command line (SDIO_CMD) and on all the data lines (SDIO_DAT). The SDIO_CLK frequency can vary between 0 MHz and 48 MHz for a MMC Card V4.2, between 0 and 200 MHz for a *e*•MMC V4.51, or between 0 and 208 MHz for an SD/SD I/O card.

SDIO uses two clock signals: the SDIO adapter clock and the AHB bus clock (HCLK).

SDIO_CMD: This signal is a bidirectional command channel used for card initialization and transfer of commands. Commands are sent from the SDIO controller to the card and

responses are sent from the card to the host. The CMD signal has two operation modes: open-drain for initialization (only for MMC V3.31 or previous), and push-pull for command transfer (SD/SD I/O card and data transfer for *e*•MMC card).

SDIO_DAT[7:0]: These are bidirectional data channels. The DAT signals operate in push-pull mode. Only the card or the host is driving these signals at a time. By default, after power up or reset, only DAT0 is used for data transfer. A wider data bus can be configured for data transfer, using either DAT0-DAT3 or DAT0-DAT7 (just for *e*•MMC 4.51), by the SDIO controller. The SDIO includes internal pull-ups for data lines DAT1-DAT7. Right after entering to the 4-bit mode the card disconnects the internal pull-ups of lines DAT1-DAT3. Correspondingly right after entering to the 8-bit mode the card disconnects the internal pull-ups of lines DAT1-DAT7.

SDIO_CLKIN: This signal is an digital input signal, and used for the clock feedback from an external driver of SD/SD I/O/*e*•MMC card. (for SDR12/SDR25/SDR50/DDR50)

SDIO_CMDDIR: This signal is an digital input signal. As card I/O direction indication for the SDIO_CMD signal.

SDIO_DAT0DIR: This signal is an digital input signal. As card I/O direction indication for the SDIO_DAT0 data line.

SDIO_DAT123DIR: This signal is an digital input signal. SD/SDIO/*e*•MMC card I/O direction indication for the data lines SDIO_DAT[3:1].

The SDIO adapter is an interface to SD, SD I/O and *e*•MMC. It consists of several subunits:

Control unit

The control unit contains the power management functions, the clock management functions for the memory card clock and I/Os direction management.

The power management is controlled by SDIO_PWRCTL register which implements power off or power on. The power management subunit will disable the card bus output signal during the reset, power-off, and power-up phases The power saving mode configured by setting CLKPWRSAV bit in SDIO_CLKCTL register, which implements close the SDIO_CLK when the bus is idle.

Clock management uses CK_SDIO to generate the SDIO_CLK clock signal to the card and provide divider control. The control unit, command send path, and data send path use the SDIO adapter clock domain (CK_SDIO). The command response path and data receive path use the SDIO adapter feedback clock domain from SDIO_IN_CLK, SDIO_CLKIN, or SDIO_FB_CLK (generated by CPDM).

The I/O direction management controls the external voltage transceiver and controls signals for SDIO_CMDDIR, SDIO_D0DIR, and SDIO_D123DIR.

Command unit

The command unit contains a command send path and a response receiv path, which are

used to send commands and receive responses to cards on the SDIO_CMD line. The command send path is clocked by SDIO_CLK, and the response receive channel has a dedicated SDIO internal receive clock. The data transfer flow is controlled by Command State Machine (CSM). After a write operation to SDIO_CMDCTL register and CSMEN in SDIO_CMDCTL register is 1, the command transfer starts. It firstly sends a command to the card. The command contains 48 bits send by SDIO_CMD signal which sends 1 bit to card at one SDIO_CLK. The 48 bits command contains 1 bit Start bit, 1 bit Transmission bit, 6 bits command index defined by CMDIDX bits in SDIO_CMDCTL register, 32 bits argument defined in SDIO_CMDAGMT register, 7 bits CRC, and 1 bit end bit. Then receive response from the card if CMDRESP in SDIO_CMDCTL register is not 0b00. There are short response which have 48 bits or long response which have 136 bits. The response stores in SDIO_RESP0 - SDIO_RESP3 registers. The command unit also generates the command status flags defined in SDIO_STAT register.

Command state machine

CS_Idle	After reset, ready to send command.	
1.CSM enabled and WAITDEND enabled	→	CS_Pend
2.CSM enabled, WAITDEND disabled and BOOTMODEN disabled	→	CS_Send
3.CSM disabled	→	CS_Idle
4.BOOTMODEN enabled	→	CS_Boot
Note: The state machine remains in the Idle state for at least eight SDIO_CLK periods to meet the N_{CC} and N_{RC} timing constraints. N_{CC} is the minimum delay between two host commands, and N_{RC} is the minimum delay between the host command and the response.		

CS_Pend	Waits for the end of data transfer.	
1.The data transfer complete	→	CS_Send
2.CSM disabled	→	CS_Idle
Note: If DATALEN =< 5, CSM directly moves to the CS_Send state; If DATALEN > 5, CSM will wait for the signal from DSM before moves to the CS_Send state.		

CS_Send	Sending the command.	
1.The command transmitted has response	→	CS_Wait
2.The command transmitted doesn't have response	→	CS_Idle
3.CSM disabled	→	CS_Idle

CS_Wait	Wait for the start bit of the response.	
1.Receive the response(detected the start bit)	→	CS_Receive
2.Timeout is reached without receiving the response	→	CS_Idle
3.CSM disabled	→	CS_Idle
Note: The command timeout has a fixed value of 64 SDIO_CLK clock periods.		

CS_Receive	Receive the response and check the CRC.	
1.CSM disabled	→	CS_Idle
2.Response received	→	CS_Idle
3.Command CRC failed	→	CS_Idle

CS_Boot	Read boot data from device.	
1. BOOTMOD = 0 and BOOTMODEN enabled	→	CS_Boot
2. BOOTMOD = 0 and BOOMODEN disabled	→	CS_Idle
3.BOOTMOD = 1	→	CS_Send

Data unit

The data unit performs data transfers to and from cards. The data transfer uses SDIO_DAT[7:0] signals when 8-bit data width (BUSMODE bits in SDIO_CLKCTL register is 0b10), use SDIO_DAT[3:0] signals when 4-bit data width (BUSMODE bits in SDIO_CLKCTL register is 0b01), or SDIO_DAT[0] signal when 1-bit data width (BUSMODE bits in SDIO_CLKCTL register is 0b00). The data transfer flow is controlled by Date State Machine (DSM). After a write operation to SDIO_DATACTL register and DATAEN in SDIO_DATACTL register is 1, the data transfer starts. It sends data to card when DATADIR in SDIO_DATACTL register is 0, or receive data from card when DATADIR in SDIO_DATACTL register is 1. The data unit also generates the data status flags defined in SDIO_STAT register. When data is received and the boot acknowledge is enabled, DSM move to the WaitACK state and waits for the boot acknowledge, and then move to the WaitR state.

Data state machine

DS_Idle	The data unit is inactive, waiting for send and receive.	
1.(DSM enabled or DATAEN = 1) and (Not busy and data transfer direction is from host to card)	→	DS_WaitS
2.DSM enabled and ACKEN disabled and data transfer direction is from card to host	→	DS_WaitR
3.DSM enabled and ACKEN enabled and data transfer direction is from card to host	→	DS_WaitACK

DS_WaitS	Wait until the data FIFO empty flag is deasserted or data transfer ended.	
1.Data transfer ended	→	DS_Idle
2.DSM abort and data FIFO empty	→	DS_Idle
3.DATHOLD flag is set	→	DS_Idle
4.Data FIFO empty flag is deasserted and DATHOLD = 0	→	DS_Send

DS_Send	Transmit data to the card.	
1.Data block transmitted	→	DS_Busy
2.DSM Abort	→	DS_Busy
3.Data transfer ended	→	DS_Busy

DS_Busy	Waits for the CRC status flag.	
1.Receive a positive CRC status	→	DS_WaitS
2.No CRC and not busy	→	DS_WaitS
3.Receive a negative CRC status and not busy	→	DS_Idle
4.DSM disabled and not busy	→	DS_Idle
Note: The command timeout programmed in the data timer register (SDIO_DATATO).		

DS_WaitR	Wait for the start bit of the receive data.	
1.Data receive ended	→	DS_Idle
2.DSM disabled	→	DS_Idle
3. DATHOLD = 1 and FIFO empty.	→	DS_Idle
4.Receives a start bit before timeout	→	DS_Receive
Note: The command timeout programmed in the data timer register (SDIO_DATATO).		

DS_Receive	Receive data from the card and write it to the data FIFO.	
1.Data block received and RWEN = 0	→	DS_WaitR
2.Data transfer ended and RWEN = 0	→	DS_WaitR
3.Data FIFO overrun error occurs	→	DS_Idle
4.DSM disabled and FIFO empty.	→	DS_Idle
5.CRC fails and data receive completed.	→	DS_Idle

DS_WaitACK	Wait for the read wait stop command.	
1.Receive the boot acknowledge in time and check OK	→	DS_WaitR
2.Acknowledgement timed out or incorrect acknowledgement received	→	DS_WaitACK
3.DSM disabled and FIFO empty	→	DS_Idle

CRU unit

The CRU unit selects the source for SDIO internal receive clock to be used with the received command response and data.

The RCLK[1:0] register can be set to select the clock source for receiving data, the three options are as follows:

- SDIO_IN_CLK bus master main feedback clock.

- SDIO_CLKIN external bus feedback clock.
- SDIO_FB_CLK bus tuned feedback clock

Note: 1. When there is no external drive and DS/HS are used, select SDIO_IN_CLK. 2. Select SDIO_CLKIN when there are external drives and SDR12, SDR25, SDR50 and DDR50 are used. 3. When using CPDM delay module, if it is SDR104 or HS200 mode, SDIO_FB_CLK must be selected input; if it is SDR50 or DDR50 mode optionally SDIO_FB_CLK clock input. 4. If CPM and DSM are in the idle state, the SDIO internal receive clock source must be changed.

Figure 36-7. CRU unit

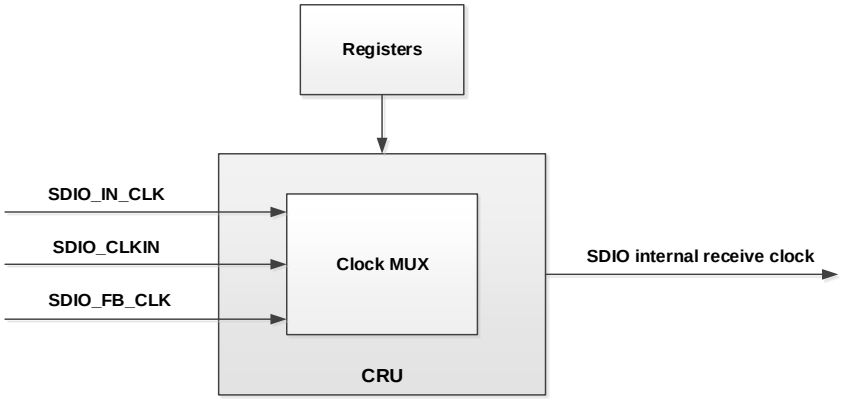

36.3.7. AHB slave interface

The AHB slave interface implements access to SDIO registers, data FIFO and generates interrupt. It includes a data FIFO unit, registers unit, and the interrupt.

It consists the following subunits:

Interrupts

The interrupt logic generates interrupt when at least one of the selected status flags is high. An interrupt enable register is provided to allow the logic to generate a corresponding interrupt. The status flag generates an interrupt request if the corresponding interrupt enable flag is set. Some status flags require an implicit clear in the clear register.

Register unit

The register unit which contains all system registers generates the signals to control the communication between the controller and card.

Data FIFO

The data FIFO unit has a data buffer, uses as transmit and receive FIFO. The FIFO contains a 32-bit wide, 32-word deep data buffer. When accessing the FIFO with half word or byte accesses an AHB bus fault is generated.

The transmit FIFO is used when write data to card. The data to be transferred is written to transmit FIFO by AHB bus, the data unit in SDIO adapter read data from transmit FIFO, and then send the data to card. When the DATALEN is not an integer multiple of 4, the last data less than 4 bytes (1/2/3 bytes) will be written in word transfer.

The receive FIFO is used when read data from card. The data to be transferred is read from the card and then write to receive FIFO. The data in receive FIFO is read to AHB bus when needed. When the DATALEN is not an integer multiple of 4, the last data less than 4 bytes (1/2/3 bytes) are read with a word transfer padded with 0 value bytes.

36.3.8. AHB master interface

AHB main interface uses SDIO internal DMA (IDMA) to transfer data between FIFO and memory.

IDMA

IDMA provides a bidirectional high-speed data transmission channel between memory and FIFO.

The IDMA is enabled by setting the IDMAEN bit to 1, and supports 8-beat burst transmission.

Burst mode includes transmit mode and receive mode:

- Transmit of burst mode
  - As long as the FIFO is empty for the number of burst transfers, the data will be obtained from memory in the form of burst until all data indicated by DATALEN have been transmitted. If DATALEN is not a multiple of the burst size, the remaining data with less than the burst size will be transmitted in single transmission mode. When DATALEN is not a multiple of 4, the last data less than 4 bytes (1/2/3 bytes) is obtained by word transmission.
- Receive of burst mode
  - As long as the FIFO is empty for the number of burst transfers, the data will be stored in the memory in the form of burst until all the data indicated by DATALEN have been transmitted. If DATALEN is not a multiple of burst transmission, the remaining data with less than burst size will be transmitted in single transmission mode. When DATALEN is not a multiple of 4, the last data less than 4 bytes (1/2/3 bytes) are stored through half word or byte transmission.

In addition, IDMA also provides two channel configurations (selected by bit BUFMOD).

- Single buffered channel
  - In single buffer configuration, data on the memory side is accessed linearly from the base address IDMAADDR0. When IDMA completes the transmission of all data and DSM also completes the transmission, the DTEND flag will be set to 1.
- Double buffered channel
  - In the double buffer configuration, the data on the memory side is accessed from two

buffers, one from IDMAADDR0 and the other from IDMAADDR1. In this way, when IDMA accesses one of the memory buffers, the firmware can process the other. The size of the memory buffer is defined by IDMASIZE. The buffer size should be an multiple of the burst size. When the channel is enabled, the base address of the buffer can be updated immediately.

In the double buffered channel mode, the address of access memory is configured by the BUFSEL bit.

- When the BUFSEL bit is "0", IDMA hardware uses IDMAADDR0 to access the memory. When trying to write the register through firmware, the write operation will be discarded and IDMAADDR0 data will not change. Allow firmware write IDMAADDR1.
- When BUFSEL bit is "1", IDMA hardware uses IDMAADDR1 to access memory. When an attempt is made to write the register through firmware, the write operation will be discarded and the IDMAADDR1 data will not change. Allow firmware to write IDMAADDR0.

When IDMA completes data transmission in one of the buffers, the buffer transmission completion flag (IDMAEND) will be set to 1 and the BUFSEL bit will flip, and then IDMA will continue to transmit data from the other buffer. When IDMA completes the transmission of all data and DSM also completes the transmission, the DTEND flag will be set to 1.

IDMAADDR0 and IDMAADDR1 addresses should be word aligned.

36.3.9. MDMA request

The internal trigger line (SDIO_DATA_END、SDIO_CMD_END and SDIO_BUF_END) from SDIO can send direct request to MDMA controller to realize continuous transmission from/to different internal RAM addresses without using CPU.

The request signal of MDMA is transmitted through SDIO_DATA_END pin input. At the same time, the signal input triggers the clearing of DTEND and CMDRECV flag, and finally starts a new transmission by directly accessing the SDIO control and configuration registers with MDMA, without CPU intervention.

When the response to the command is successfully received, the CMDRECV flag will be set. When the busy state after R1b response ends, DAT0BSY flag of status register is cleared and DAT0BSYEND flag is set. When the sequence command response associated with an eventual busy signal ends, set the SDIO_CMD_END output connected to the MDMA. So, the MDMA can manage CMD12 (STOP_TRANSMISSION) command (needed to support open mode transfers) by clearing CMDRECV and DAT0BSYEND status flags.

When using Linux operating system, the data to be transmitted through SDIO bus is contained in the 1-4kbyte blocks of the discontinuous address in the internal memory of the device. The double buffer mode allows the destination address of IDMA to be changed in internal memory. The IDMAEND flag of the status register is set each time the buffer transfer is completed. By signaling this event to MDMA through the SDIO_BUF_END output connected to an MDMA

request input, the new buffer address base can alternatively fill the IDMAADDR0/IDMAADDR1 fields without CPU intervention.

The *Table 36-7. SDIO connections to MDMA* shows the actions of programming in MDMA according to SDIO requests:

Table 36-7. SDIO connections to MDMA

Trigger signal	Event signaled	Event occurrence	MDMA transfer config	MDMA action
SDIO_DATA_END	End of successful data transfer	DTEND = 1	single	Set DTENDC
SDIO_CMD_END	End of command sequence	CMDSEND = 1, or (CMDRECV = 1 and DAT0BSY = 0)	single	Set CMDSENDC Set CMDRECVC Set DAT0BSYENDC
SDIO_BUF_END	End of buffer reached	IDMAENDC = 1	link list	Set IDMAENDC Update IDMAADDR0/1

36.3.10. AHB and SDIO_CLK clock relation

AHB bandwidth should be at least 3 times of SDIO bus bandwidth.

Table 36-8. AHB and e•MMC clock frequence relation

SDIO Bus modes	Bus width	Maximum SDIO_CLK [MHz]	Minimum AHB Clock [MHz]
DS	8	26	19.5
HS	8	52	39
HS DDR	8	52	78
HS200	8	200	150

Table 36-9. AHB and SD/SD I/O card clock frequence relation

SDIO Bus modes	Bus width	Maximum SDIO_CLK [MHz]	Minimum AHB Clock [MHz]
SDR12	4	25	9.4
SDR25	4	50	18.8
SDR50	4	100	37.5
DDR50	4	50	37.5
SDR104	4	208	78

36.3.11. Hardware flow control

The hardware flow control function freezes the state machine by stopping the SDIO_CLK during data transmission, thereby preventing FIFO underrun (transmit data) and overrun (receive data) errors.

Stoppage of the FIFO causes a pause in data transmission until the transmit FIFO is half full or the DATALEN of the data is stored, or the receive FIFO is half empty. When the state

machine freezes, the AHB interface may remain active. Therefore, the FIFO can operate even if hardware flow control is performed.

Hardware flow control is enabled by setting the HWEN register.

Hardware flow control must only be used when the SDIO_DAT data is cycle-aligned with the SDIO_CLK. SDR104 mode using CPDM delay module cannot use hardware control.

Figure 36-8. Hardware flow timing

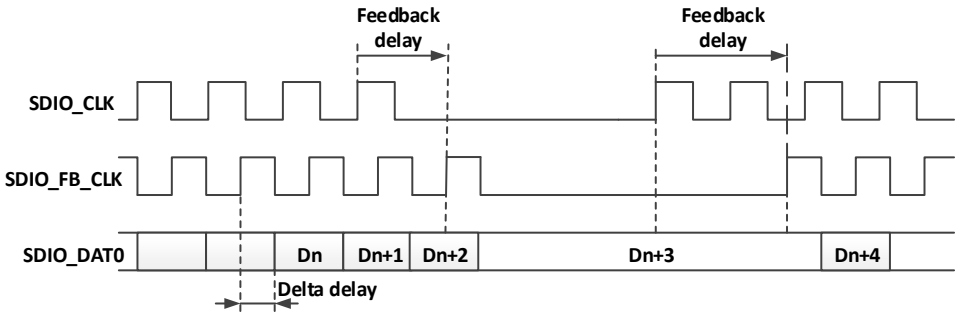

36.4. Card function overview

36.4.1. Card registers

Within the card interface registers are defined: OCR, CID, CSD, EXT_CSD, RCA, DSR and SCR. These can be accessed only by corresponding commands. The OCR, CID, CSD and SCR registers carry the card/content specific information, while the RCA and DSR registers are configuration registers storing actual configuration parameters. The EXT_CSD register carries both, card specific information and actual configuration parameters. For specific information, please refer to the relevant specifications.

OCR register: The 32-bit operation conditions register (OCR) stores the V_{DD} voltage profile of the card and the access mode indication (*e*•MMC). In addition, this register includes a status information bit. This status bit is set if the card power up procedure has been finished. The register is a little different between *e*•MMC and SD card. The host can use CMD1 (e•MMC), ACMD41 (SD memory), CMD5 (SD I/O) to get the content of this register.

CID register: The Card Identification (CID) register is 128 bits wide. It contains the card identification information used during the card identification phase. Every individual Read/Write (RW) card shall have a unique identification number. The host can use CMD2 and CMD10 to get the content of this register.

CSD register: The Card-Specific Data register provides information regarding access to the card contents. The CSD defines the data format, error correction type, maximum data access time, data transfer speed, whether the DSR register can be used, etc. The programmable part of the register can be changed by CMD27. The host can use CMD9 to get the content of this register.

Extended CSD Register: Just *e*•MMC4.51 has this register. The Extended CSD register defines the card properties and selected modes. It is 512 bytes long. The most significant 320 bytes are the Properties segment, which defines the card capabilities and cannot be modified by the host. The lower 192 bytes are the Modes segment, which defines the configuration the card is working in. These modes can be changed by the host by means of the SWITCH command. The host can use CMD8 (just *e*•MMC supports this command) to get the content of this register.

RCA register: The writable 16-bit relative card address register carries the card address that is published by the card during the card identification. This address is used for the addressed host-card communication after the card identification procedure. The host can use CMD3 to ask the card to publish a new relative address (RCA).

Note: The default value of the RCA register is 0x0001(*e*•MMC) or 0x0000(SD/SD I/O). The default value is reserved to set all cards into the Stand-by State with CMD7.

DSR register (Optional): The 16-bit driver stage register can be optionally used to improve the bus performance for extended operating conditions (depending on parameters like bus length, transfer rate or number of cards). The CSD register carries the information about the DSR register usage. The default value of the DSR register is 0x404. The host can use CMD4 to get the content of this register.

SCR register: Just SD/SD I/O (if has memory port) have this register. In addition to the CSD register, there is another configuration register named SD CARD Configuration Register (SCR), which is only for SD card. SCR provides information on the SD Memory Card's special features that were configured into the given card. The size of SCR register is 64 bits. This register shall be set in the factory by the SD Memory Card manufacturer. The host can use ACMD51 to get the content of this register.

36.4.2. Commands

Commands types

There are four kinds of commands defined to control the Card:

- Broadcast commands (bc), no response
- Broadcast commands with response (bcr) response from all cards simultaneously
- Addressed (point-to-point) commands (ac) no data transfer on DAT
- Addressed (point-to-point) data transfer commands (adtc) data transfer on DAT

Command format

All commands have a fixed code length of 48 bits, as show in ***Figure 36-9. Command Token Format***, needing a transmission time of 1.92μs (25 MHz) 0.96μs (50 MHz) and 0.92us (52 MHz).

Figure 36-9. Command Token Format

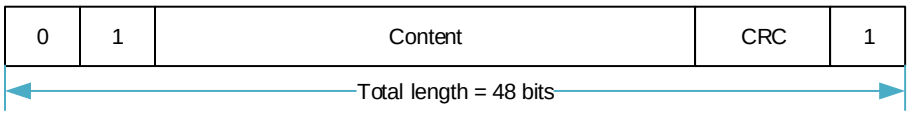

Table 36-10. Command format

Bit position	47	46	[45:40]	[39:8]	[7:1]	0
Width	1	1	6	32	7	1
Value	'0'	'1'	x	x	x	'1'
Description	start bit	transmission bit	command index	argument	CRC7	end bit

A command always starts with a start bit (always 0), followed by the bit indicating the direction of transmission (host = 1). The next 6 bits indicate the index of the command, this value being interpreted as a binary coded number (between 0 and 63). Some commands need an argument (e.g. an address), which is coded by 32 bits. A value denoted by 'x' in the table above indicates this variable is dependent on the command. All commands are protected by a CRC7. Every command code word is terminated by the end bit (always 1).

Command classes

The command set of the Card system is divided into several classes (See ***Table 36-11. Card command classes (CCCs)***. Each class supports a set of card functionalities. ***Table 36-11. Card command classes (CCCs)*** determines the setting of CCC from the card supported commands.

For SD cards, Class 0, 2, 4, 5 and 8 are mandatory and shall be supported. Class 7 except CMD40 is mandatory for SDHC. The other classes are optional. The supported Card Command Classes (CCC) are coded as a parameter in the card specific data (CSD) register of each card, providing the host with information on how to access the card.

For *e*•MMC cards, Class 0 is mandatory and shall be supported. The other classes are either mandatory only for specific card types or optional. By using different classes, several configurations can be chosen (e.g. a block writable card or a stream readable card). The supported Card Command Classes (CCC) are coded as a parameter in the card specific data (CSD) register of each card, providing the host with information on how to access the card.

Table 36-11. Card command classes (CCCs)

	Card command class(CCC)	**0**	**1**	**2**	**3**	**4**	**5**	**6**	**7**	**8**	**9**	**10**	**11**

Supported command	Class description	basic	Stream read	Block read	Stream write	Block write	erase	write protection	Lock card	application specific	I/O mode	Security Protocols	reserved
CMD0	M	+											
CMD1	M	+											
CMD2	M	+											
CMD3	M	+											
CMD4	M	+											
CMD5	M	+									+		
CMD6	M	+											
CMD7	M	+											
CMD8	M	+											
CMD9	M	+											
CMD10	M	+											
CMD11	O	+	+										
CMD12	M	+											
CMD13	M	+											
CMD14	M	+											
CMD15	M	+											
CMD16	M			+		+			+				
CMD17	M			+									
CMD18	M			+									
CMD19	M	+											
CMD20	M				+								
CMD21	M			+									
CMD23	M			+		+							
CMD24	M					+							
CMD25	M					+							
CMD26	M					+							
CMD27	M					+							
CMD28	M							+					
CMD29	M							+					
CMD30	M							+					
CMD32	M						+						
CMD33	M						+						
CMD34	M												+
CMD35	O						+						
CMD36	O						+						
CMD37	O												+

CMD38	M						+						
CMD39											+		
CMD40											+		
CMD42									+				
CMD49						+							
CMD52	O										+		
CMD53	O										+	+	
CMD54	O											+	
CMD55	M									+			
CMD56	M									+			
CMD57	O												+
ACMD6	M									+			
ACMD13	M									+			
ACMD22	M									+			
ACMD23	M									+			
ACMD41	M									+			
ACMD42	M									+			
ACMD51	M									+			

Note: 1. M: mandatory, O: optional.

2. CMD5 is Class 0 command for SD card and Class 9 command in *e*•MMC.

3. In SD cards that support UHS-I, CMD11 is a type 0 command and mandatory, and it is optional in other SD cards; in e•MMC, CMD11 is a type 1 command.

4. CMD14, CMD20, CMD21, CMD26, CMD39, CMD40, CMD49 and CMD54 are only available for *e*•MMC. CMD32, CMD33, CMD52, CMD57 and ACMDx are only available for SD card.

5. All the ACMDx shall be preceded with APP_CMD command (CMD55).

6. CMD5, CMD8 , CMD11 and CMD53 has different meaning for *e*•MMC and SD memory.

7. Class 1 and Class 3 are obsolete.

Detailed command description

The following tables describe in detail all bus commands. The responses R1-R7 are defined in

Responses. The registers CID, CSD and DSR are described in ***Card registers***. The card shall ignore stuff bits and reserved bits in an argument.

Table 36-12. Basic commands (class 0)

Cmd index	type	argument	Response format	Abbreviation	Description
CMD0	bc	[31:0] 00000000	-	GO_IDLE_STATE	Resets all cards to idle state
	bc	[31:0] F0F0F0F0	-	GO_PRE_IDLE_STATE	Resets all cards to pre-idle state

Cmd index	type	argument	Response format	Abbreviation	Description
	-	[31:0] FFFFFFFA	-	BOOT_INITIATION	Initiate alternative boot operation
CMD1	bc	[31:0] OCR without busy	R3	SEND_OP_COND	Asks the card, in idle state, to send its Operating Conditions Register contents in the response on the CMD line.
CMD2	bcr	[31:0] stuff bits	R2	ALL_SEND_CID	Asks any card to send the CID numbers on the CMD line (any card that is connected to the host will respond)
CMD3	bcr	[31:0] stuff bits	R6	SEND_RELATIVE_ADDR	Ask the card to publish a new relative address (RCA)
CMD4	bc	[31:16] DSR [15:0] stuff bits	-	SET_DSR	Programs the DSR of all cards
CMD5	bcr	[31:25]reserved bits [24]S18R [23:0] I/O OCR	R4	IO_SEND_OP_COND	Only for I/O cards. It is similar to the operation of ACMD41 for SD memory cards, used to inquire about the voltage range needed by the I/O card.
CMD5	ac	[31:16] RCA [15] Sleep/Awake [14:0] stuff bits	R1b	SLEEP_AWAKE	Only for *e*•MMC. Toggles the Device between Sleep state and Standby state.
CMD6	adtc	[31] Mode 0:Check function 1:Switch function [30:24] reserved [23:20] reserved for function group 6 (0h or Fh) [19:16] reserved for function group 5 (0h or Fh) [15:12] reserved for function group 4 (0h or Fh) [11:8] reserved for function group 3 (0h or Fh) [7:4] function group 2 for	R1	SWITCH_FUNC	Only for SD memory and SD I/O. Checks switchable function (mode 0) and switch card function (mode 1).

Cmd index	type	argument	Response format	Abbreviation	Description
		command system [3:0] function group 1 for access mode			
CMD6	ac	[31:26] Set to 0 [25:24] Access [23:16] Index [15:8] Value [7:3] Set to 0 [2:0] Cmd Set	R1b	SWITCH	Only for *e*•MMC. Switches the mode of operation of the selected card or modifies the EXT_CSD registers.
CMD7	ac	[31:16] RCA [15:0] stuff bits	R1b	SELECT/DESELECT_CARD	Command toggles a card between the stand-by and transfer states or between the programming and disconnects states. In both cases the card is selected by its own relative address and gets deselected by any other address; address 0 deselects the card.
CMD8	bcr	[31:12]reserved bits [11:8]supply voltage(VHS) [7:0]check pattern	R7	SEND_IF_COND	Sends SD Memory Card interface condition, which includes host supply voltage information and asks the card whether card supports voltage. Reserved bits shall be set to '0'.
CMD8	adtc	[31:0] stuff bits	R1	SEND_EXT_CSD	For *e*•MMC only. The card sends its EXT_CSD register as a block of data.
CMD9	ac	[31:16] RCA [15:0] stuff bits	R2	SEND_CSD	Addressed card sends its card-specific data (CSD) on the CMD line.
CMD10	ac	[31:16] RCA [15:0] stuff bits	R2	SEND_CID	Addressed card sends its card identification (CID) on CMD the line.
CMD11	ac	[31:0] 00000000	R1	VOLTAGE_SWITCH	Switch to 1.8V bus signaling level.
CMD12	ac	[31:0] stuff bits	R1b	STOP TRANSMISSION	Forces the card to stop transmission
CMD13	ac	[31:16] RCA [15:0] stuff bits	R1	SEND_STATUS	Addressed card sends its status register.
CMD14	adtc	[31:0] stuff bits	R1	BUSTEST_R	A host reads the reversed bus testing data pattern from a card.

Cmd index	type	argument	Response format	Abbreviation	Description
CMD15	ac	[31:16] RCA [15:0] reserved bits	-	GO_INACTIVE_STATE	Sends an addressed card into the Inactive State. This command is used when the host explicitly wants to deactivate a card.
CMD19	adtc	[31:0] stuff bits	R1	BUSTEST_W	A host sends the bus test data pattern to a card.

Table 36-13. Block-Oriented read commands (class 2)

Cmd index	type	argument	Response format	Abbreviation	Description
CMD16	ac	[31:0] block length	R1	SET_BLOCKLEN	In the case of a Standard Capacity SD and *e*•MMC, this command sets the block length (in bytes) for all following block commands (read, write, lock). Default is 512 Bytes. Set length is valid for memory access commands only if partial block read operation are allowed in CSD. In the case of a High Capacity SD Memory Card, block length set by CMD16 command does not affect the memory read and write commands. Always 512 Bytes fixed block length is used. In both cases, if block length is set larger than 512Bytes, the card sets the BLOCK_LEN_ERROR bit.
CMD17	adtc	[31:0] data address	R1	READ_SINGLE_BLOCK	In the case of a Standard Capacity SD and *e*•MMC, this command reads a block of the size selected by the SET_BLOCKLEN command. In the case of a High Capacity Card, block length is fixed 512 Bytes regardless of the SET_BLOCKLEN command.
CMD18	adtc	[31:0] data address	R1	READ_MULTIPLE_BLOCK	Continuously transfers data blocks from card to host until interrupted by a

Cmd index	type	argument	Response format	Abbreviation	Description
					STOP_TRANSMISSION command. Block length is specified the same as READ_SINGLE_BLOCK command.
CMD21	adtc	[31:0] stuff bits	R1	SEND_TUNNING _BLOCK	128 clocks of tuning pattern (64byte in 4 bit mode or 128byte in 8 bit mode) is sent for HS200 optimal sampling point detection.
Note: The transferred data must not cross a physical block boundary, unless READ_BLK_MISALIGN is set in the CSD register					

Table 36-14. Stream read commands (class 1) and stream write commands (class 3)

Cmd index	type	argument	Response format	Abbreviation	Description
CMD11	adtc	[31:0] data address	R1	READ_DAT_UNTI L_STOP	Reads data stream from the card, starting at the given address, until a STOP_TRANSMISSION follows.
CMD20	adtc	[31:0] data address	R1	WRITE_DAT_UN TIL_STOP	Writes data stream from the host, starting at the given address, until a STOP_TRANSMISSION follows.
Note: The transferred data must not cross a physical block boundary, unless READ_BLK_MISALIGN is set in the CSD register					

Table 36-15. Block-Oriented write commands (class 4)

Cmd index	type	argument	Response format	Abbreviation	Description
CMD16	ac	[31:0] block length	R1	SET_BLOCKLEN	See description in ***Table 36-13. Block-Oriented read commands (class 2)***.
CMD23	ac	[31:16] set to 0 [15:0] number of blocks	R1	SET_BLOCK_ COUNT	Defines the number of blocks which are going to be transferred in the immediately succeeding multiple block read or write command. If the argument is all 0s, the subsequent read/write operation will be open-ended.

Cmd index	type	argument	Response format	Abbreviation	Description
CMD24	adtc	[31:0] data address	R1	WRITE_BLOCK	In the case of a Standard Capacity SD, this command writes a block of the size selected by the SET_BLOCKLEN command. In the case of a SDHC, block length is fixed 512 Bytes regardless of the SET_BLOCKLEN command.
CMD25	adtc	[31:0] data address	R1	WRITE_MULTIPLE _BLOCK	Continuously writes blocks of data until a STOP_TRANSMISSION follows. Block length is specified the same as WRITE_BLOCK command.
CMD26	adtc	[31:0] stuff bits	R1	PROGRAM_CID	Programming of the card identification register. This command shall be issued only once. The card contains hardware to prevent this operation after the first programming. Normally this command is reserved for the manufacturer.
CMD27	adtc	[31:0] stuff bits	R1	PROGRAM_CSD	Programming of the programmable bits of the CSD.
CMD49	adtc	[31:0] stuff bits	R1	SET_TIME	Sets the real time clock according to the RTC information in the 512B data block.
Note: 1. The data transferred shall not cross a physical block boundary unless WRITE_BLK_MISALIGN is set in the CSD. In the case that write partial blocks is not supported, then the block length=default block length (given in CSD). 2. Data address is in byte units in a Standard Capacity SD Memory Card and in block (512 Byte) units in a High Capacity SD Memory Card.					

Table 36-16. Erase commands (class 5)

Cmd index	type	argument	Response format	Abbreviation	Description
CMD32	ac	[31:0] data address	R1	ERASE_WR_BLK _START	Sets the address of the first write block to be erased.(SD)
CMD33	ac	[31:0] data address	R1	ERASE_WR_BLK _END	Sets the address of the last write block of the continuous range to be erased.(SD)

CMD35	ac	[31:0]data address	R1	ERASE_GROUP_START	Sets the address of the first erase group within a range to be selected for erase.(*e*•MMC)
CMD36	ac	[31:0]data address	R1	ERASE_GROUP_END	Sets the address of the last erase group within a continuous range to be selected for erase. (*e*•MMC)
CMD38	ac	[31:0] stuff bits	R1b	ERASE	Erases all previously selected write blocks.
Note: 1.CMD34 and CMD37 are reserved in order to maintain backwards compatibility with older versions of the *e*•MMC. 2. Data address is in byte units in a Standard Capacity SD Memory Card and in block (512 Byte) units in a High Capacity SD Memory Card.					

Table 36-17. Block oriented write protection commands (class 6)

Cmd index	type	argument	Response format	Abbreviation	Description
CMD28	ac	[31:0] data address	R1b	SET_WRITE_PROT	If the card has write protection features, this command sets the write protection bit of the addressed group. The properties of write protection are coded in the card specific data (WP_GRP_SIZE). A High Capacity SD Memory Card does not support this command.
CMD29	ac	[31:0] data address	R1b	CLR_WRITE_PROT	If the card provides write protection features, this command clears the write protection bit of the addressed group.
CMD30	adtc	[31:0] write protect data address	R1	SEND_WRITE_PROT	If the card provides write protection features, this command asks the card to send the status of the write protection bits.
Note: 1. High Capacity SD Memory Card does not support these three commands.					

Table 36-18. Lock card (class 7)

Cmd index	type	argument	Response format	Abbreviation	Description
CMD16	ac	[31:0] block length	R1	SET_BLOCK_LEN	See description in ***Table 36-13. Block-Oriented read***

					commands (class 2).
CMD42	adtc	[31:0] Reserved bits (Set all 0)	R1	LOCK_UNLOCK	Used to set/reset the password or lock/unlock the card. The size of the data block is set by the SET_BLOCK_LEN command. Reserved bits in the argument and in Lock Card Data Structure shall be set to 0.

Table 36-19. Application-specific commands (class 8)

Cmd index	type	argument	Response format	Abbreviation	Description
ACMD41	bcr	[31]reserved bit [30]HCS [29:24]reserved bits [23:0]V_{DD} Voltage Window(OCR[23:0])	R3	SD_SEND_OP_COND	Sends host capacity support information (HCS) and asks the accessed card to send its operating condition register(OCR) content in the response. HCS is effective when card receives SEND_IF_COND command. CCS bit is assigned to OCR[30].
ACMD42	ac	[31:1] stuff bits [0]set_cd	R1	SET_CLR_CARD_DETECT	Connect[1]/Disconnect[0] the 50K pull-up resistor on CD/DAT3 (pin 1) of the card.
ACMD51	adtc	[31:0] stuff bits	R1	SEND_SCR	Reads the SD Configuration Register (SCR).
CMD55	ac	[31:16] RCA [15:0] stuff bits	R1	APP_CMD	Indicates to the card that the next command is an application specific command rather than a standard command.
CMD56	adtc	[31:1] stuff bits. [0] RD/WR	R1	GEN_CMD	Used either to transfer a data block to the card or to get a data block from the card for general purpose/application specific command. The host sets RD/WR=1 for reading data from the card and sets to 0 for writing data to the card.
Note: 1. ACMDx is Application-specific Commands for SD memory.					

Table 36-20. I/O mode commands (class 9)

Cmd index	type	argument	Response format	Abbreviation	Description
CMD39	ac	[31:16] RCA [15] register write flag [14:8] register address [7:0] register data	R4	FAST_IO	Used to write and read 8 bit (register) data fields. The command addresses a card and a register and provides the data for writing if the write flag is set. The R4 response contains data read from the addressed register if the write flag is cleared to 0. This command accesses application dependent registers which are not defined in the *e*•MMC standard.
CMD40	bcr	[31:0] stuff bits	R5	GO_IRQ_STATE	Sets the system into interrupt mode
CMD52	adtc	[31] R/W Flag [30:28] Function Number [27] RAW Flag [26] stuff bits [25:9] Register Address [8] stuff bits [7:0] Write Data/Stuff bits	R5	IO_RW_DIRECT	The IO_RW_DIRECT is the simplest means to access a single register within the total 128K of register space in any I/O function, including the common I/O area (CIA). This command reads or writes 1 byte using only 1 command/response pair. A common use is to initialize registers or monitor status values for I/O functions. This command is the fastest means to read or write single I/O registers, as it requires only a single command/response pair.
CMD53	adtc	[31] R/W Flag [30:28] Function Number [27] Block Mode [26] OP code [25:9] Register Address [8:0] Byte/Block Count		IO_RW_EXTENDED	This command allows the reading or writing of a large number of I/O registers with a single command.

Cmd index	type	argument	Response format	Abbreviation	Description
Note: 1.CMD39, CMD40 are only for *e*•MMC. 2. CMD52, CMD53 are only for SD I/O card.					

Table 36-21. Switch function commands (class 10)

Cmd index	type	argument	Response format	Abbreviation	Description
CMD53	adtc	[16:31] Security Protocol Specific [15:8] Security Protocol [7:0] reserved	R1	PROTOCOL_RD	Only for SD memory and SD I/O. Continuously transfers data blocks from device to host. Number of data blocks shall be defined by a preceding CMD23. Data Transfer may be interrupted by a STOP_TRANSMISSION command, This command is not supported if sent as a packed command. Block size is always 512bytes
CMD54	adtc	[16:31] Security Protocol Specific [15:8] Security Protocol [7:0] reserved	R1	PROTOCOL_WR	Only for SD memory and SD I/O. Continuously transfers data blocks from host to device. Number of data blocks shall be defined by a preceding CMD23. Data Transfer may be interrupted by a STOP_TRANSMISSION command, This command is not supported if sent as a packed command. Block size is always 512bytes.

36.4.3. Responses

All responses are sent on the CMD line. The response transmission always starts with the left bit of the bit string corresponding to the response code word. The code length depends on the response type.

Responses types

There are 7 types of responses show as follows.

- **R1 / R1b :** normal response command.
- **R2 :** CID, CSD register.
- **R3 :** OCR register.
- **R4 :** Fast I/O.
- **R5 :** Interrupt request.
- **R6 :** Published RCA response.
- **R7 :** Card interface condition.

The SD Memory Card support five types of them, R1 / R1b, R2, R3, R6, R7. And the SD I/O Card and *e*•MMC supports additional response types named R4 and R5, but they are not exactly the same for SD I/O Card and *e*•MMC.

Responses format

Responses have two formats, as show in ***Figure 36-10. Response Token Format***, all responses are sent on the CMD line. The code length depends on the response type. Except R2 is 136 bits length, others are all 48 bits length.

Figure 36-10. Response Token Format

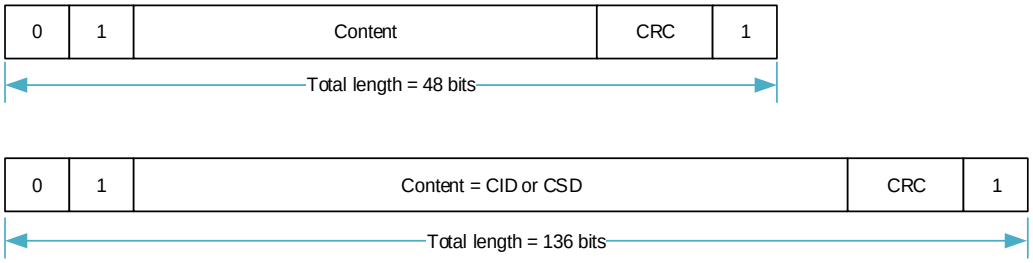

A response always starts with a start bit (always 0), followed by the bit indicating the direction of transmission (card = 0). A value ‘x’ in the tables below indicates a variable entry. All responses except for the type R3 are protected by a CRC. Every command code word is terminated by the end bit (always 1).

R1 (normal response command)

Code length is 48 bits. The bits 45:40 indicate the index of the command to be responded to, this value being interpreted as a binary coded number (between 0 and 63). The status of the card is coded in 32 bits. Note that if a data transfer to the card is involved, then a busy signal

may appear on the data line after the transmission of each block of data. The host shall check for busy after data block transmission. The card status is described in ***Two status fields of the card***.

Table 36-22. Response R1

Bit position	47	46	[45:40]	[39:8]	[7:1]	0
Width	1	1	6	32	7	1
Value	'0'	'0'	x	x	x	'1'
description	start bit	transmission bit	command index	card status	CRC7	end bit

R1b

R1b is identical to R1 with an optional busy signal transmitted on the data line DAT0. The card may become busy after receiving these commands based on its state prior to the command reception. The Host shall check for busy at the response.

R2 (CID, CSD register)

Code length is 136 bits. The contents of the CID register are sent as a response to the commands CMD2 and CMD10. The contents of the CSD register are sent as a response to CMD9. Only the bits [127..1] of the CID and CSD are transferred, the reserved bit [0] of these registers is replaced by the end bit of the response.

Table 36-23. Response R2

Bit position	135	134	[133:128]	[127:1]	0
Width	1	1	6	127	1
Value	'0'	'0'	'111111'	x	'1'
description	start bit	transmission bit	reserved	CID or CSD register and internal CRC7	end bit

R3 (OCR register)

Code length is 48 bits. The contents of the OCR register are sent as a response to ACMD41 (SD memory), CMD1 (*e*•MMC). The response of different cards may have a little different.

Table 36-24. Response R3

Bit position	47	46	[45:40]	[39:8]	[7:1]	0
Width	1	1	6	32	7	1
Value	'0'	'0'	'111111'	x	'1111111'	'1'
description	start bit	transmission bit	reserved	OCR register	reserved	end bit

R4 (Fast I/O)

For *e*•MMC only. Code length 48 is bits. The argument field contains the RCA of the addressed card, the register address to be read out or written to, and its contents. The status bit in the argument is set if the operation was successful.

Table 36-25. Response R4 for e•MMC

Bit position	47	46	[45:40]	[39:8] Argument field				[7:1]	0
Width	1	1	6	16	1	7	8	7	1
Value	‘0’	‘0’	‘100111’	x	x	x	x	x	‘1’
description	start bit	transmission bit	CMD39	RCA [31:16]	status [15]	register address [14:8]	read register contents [7:0]	CRC7	end bit

R4b

For SD I/O only. Code length is 48 bits. The SDIO card receive the CMD5 will respond with a unique SD I/O response R4.

Table 36-26. Response R4 for SD I/O

Bit position	47	46	[45:40]	39	[38:36]	35	[34:32]	31	[30:8]	[7:1]	0
Width	1	1	6	1	3	1	3	1	23	7	1
Value	‘0’	‘0’	‘111111’	x	x	x	‘000’	x	x	‘1111111’	1
description	start bit	transmission bit	Reserved	C	Number of I/O functions	Memory Present	Stuff Bits	S18A	I/O OCR	Reserved	end bit

R5 (Interrupt request)

For *e*•MMC only. Code length is 48 bits. If the response is generated by the host, the RCA field in the argument will be 0x0.

Table 36-27. Response R5 for *e*•MMC

Bit position	47	46	[45:40]	[39:8] Argument field		[7:1]	0
Width	1	1	6	16	16	7	1
Value	‘0’	‘0’	‘101000’	x	x	x	‘1’
description	start bit	transmission bit	CMD40	RCA [31:16] of winning card or of the host	[15:0] Not defined. May be used for IRQ data	CRC7	end bit

R5b

For SD I/O only. The SDIO card's response to CMD52 and CMD53 is R5. If the communication

between the card and host is in the 1-bit or 4-bit SD mode, the response shall be in a 48-bit response (R5).

Table 36-28. Response R5 for SD I/O

Bit position	47	46	[45:40]	[39:24]	[23:16]	[15:8]	[7:1]	0
Width	1	1	6	16	8	8	7	1
Value	'0'	'0'	'11020X'	'0'	x	x	x	'1'
description	start bit	transmission bit	CMD52/53	Stuff Bits	Response Flags	Read or Write Data	CRC7	end bit

R6 (Published RCA response)

Code length is 48 bit. The bits [45:40] indicate the index of the command to be responded to (CMD3). The 16 MSB bits of the argument field are used for the Published RCA number.

Table 36-29. Response R6

Bit position	47	46	[45:40]	[39:8] Argument field		[7:1]	0
Width	1	1	6	16	16	7	1
Value	'0'	'0'	'000011'	x	x	x	'1'
description	start bit	transmission bit	CMD3	New published RCA of the card	card status bits:23,22,19,12:0	CRC7	end bit

R7 (Card interface condition)

For SD memory only. Code length is 48 bits. The card support voltage information is sent by the response of CMD8. Bits 19-16 indicate the voltage range that the card supports. The card that accepted the supplied voltage returns R7 response. In the response, the card echoes back both the voltage range and check pattern set in the argument.

Table 36-30. Response R7

Bit position	47	46	[45:40]	[39:20]	[19:16]	[15:8]	[7:1]	0
Width	1	1	6	20	4	8	7	1
Value	'0'	'0'	'001000'	'00000h'	x	x	x	'1'
description	start bit	transmission bit	CMD8	Reserved bits	Voltage accepted	echo-back of check pattern	CRC7	end bit

36.4.4. Data packets format

There are 5 data bus mode, 1-bit, 4-bit SDR/DDR, 8-bit SDR/DDR. 1-bit mode is mandatory, 4-bit and 8-bit mode is optional.

1-bit data packet format

After card reset and initialize, only DAT0 pin is used to transfer data. And other pin can be used freely. *Figure 36-11. 1-bit data bus width*, *Figure 36-12. 4-bit data bus width* and *Figure 36-13. 8-bit data bus width* show the data packet format when data bus wide is 1-

bit, 4-bit and 8-bit.

Figure 36-11. 1-bit data bus width

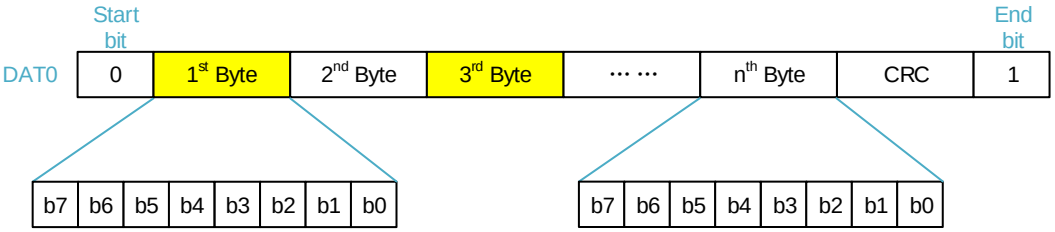

4-bit data packet format

Figure 36-12. 4-bit data bus width

	Start bit	1st Byte		2nd Byte		3rd Byte			nth Byte			End bit
DAT3	0	b7	b3	b7	b3	b7	b3	… …	b7	b3	CRC	1
DAT2	0	b6	b2	b6	b2	b6	b2	… …	b6	b2	CRC	1
DAT1	0	b5	b1	b5	b1	b5	b1	… …	b5	b1	CRC	1
DAT0	0	b4	b0	b4	b0	b4	b0	… …	b4	b0	CRC	1

8-bit data packet format

Figure 36-13. 8-bit data bus width

	Start bit	1st Byte	2nd Byte	3rd Byte						nth Byte		End bit
DAT7	0	b7	b7	b7				… …		b7	CRC	1
DAT6	0	b6	b6	b6				… …		b6	CRC	1
DAT5	0	b5	b5	b5				… …		b5	CRC	1
DAT4	0	b4	b4	b4				… …		b4	CRC	1
DAT3	0	b3	b3	b3				… …		b3	CRC	1
DAT2	0	b2	b2	b2				… …		b2	CRC	1
DAT1	0	b1	b1	b1				… …		b1	CRC	1
DAT0	0	b0	b0	b0				… …		b0	CRC	1

4-bit bus data packet format for DDR (DAT3-DAT0 used)

For each data lines, data can be transferred at the rate of one bit (single data rate) or two bits (double data rate) per clock cycle. DDR (double data rate) signaling, data is sampled on both SDIO_CLK clock edges. ***Figure 36-14. 4-bit data bus DDR*** and ***Figure 36-15. 8-bit data bus DDR*** show the data packet format when data bus wide is 4-bit DDR and 8-bit DDR.

Figure 36-14. 4-bit data bus DDR

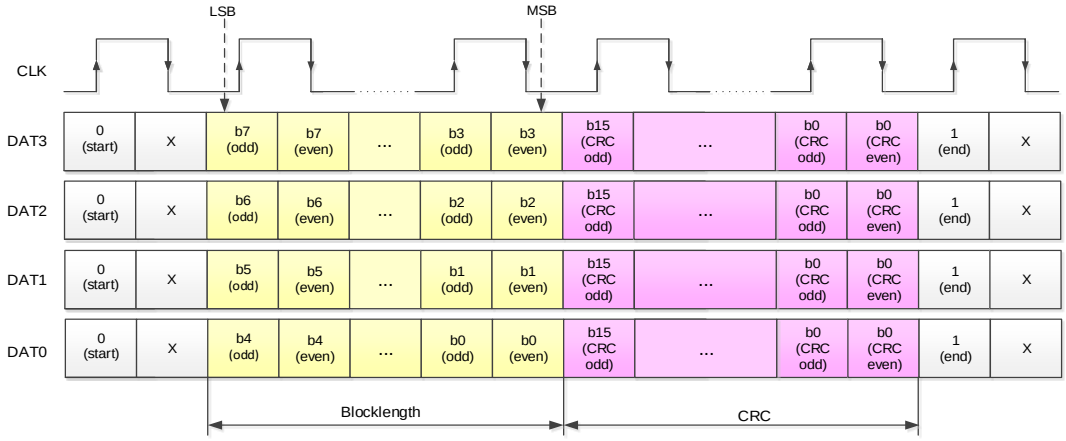

8-bit bus data packet format for DDR (DAT7-DAT0 used)

Figure 36-15. 8-bit data bus DDR

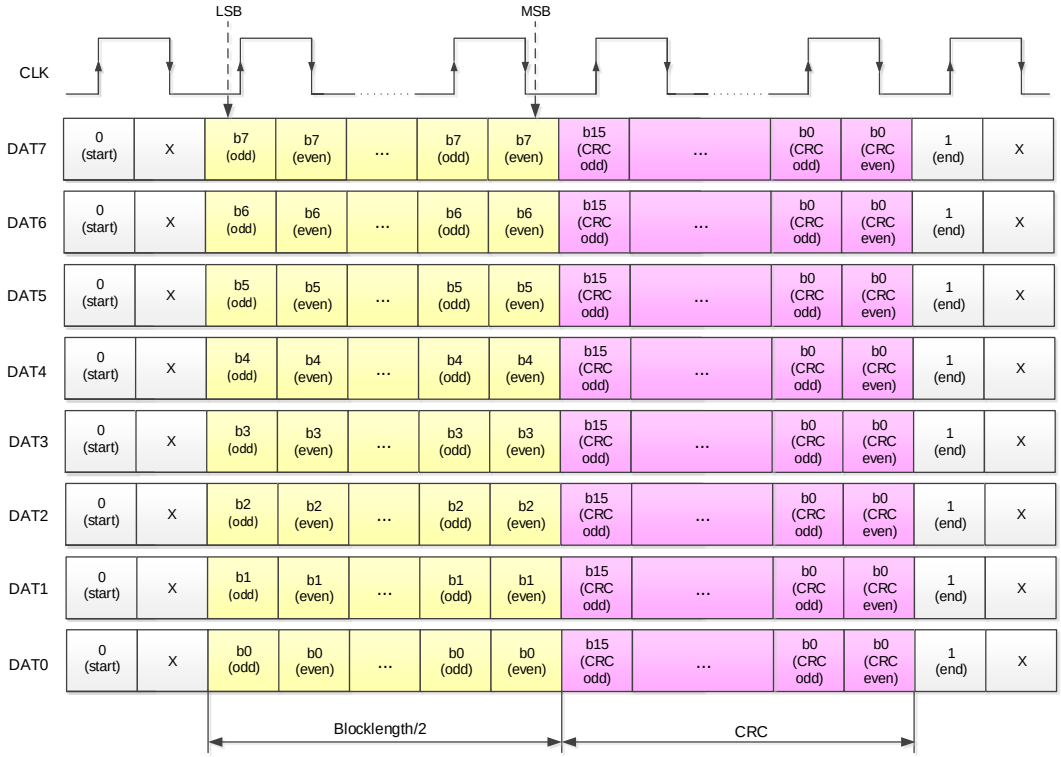

Note: For DDR data bus: 1.That bytes data are not interleaved but CRC are interleaved. 2. Start bits are valid on the rising and falling edge. 3. End bits are only valid on the rising edge (“x” undefined).

36.4.5. Two status fields of the card

The SD Memory supports two status fields and others just support the first one:

Card Status: Error and state information of a executed command, indicated in the response

SD Status: Extended status field of 512 bits that supports special features of the SD Memory Card and future Application-Specific features.

Card status

The response format R1 contains a 32-bit field named card status. This field is intended to transmit the card's status information (which may be stored in a local status register) to the host. If not specified otherwise, the status entries are always related to the previous issued command.

The type and clear condition fields in the table are abbreviated as follows:

Type

•E: Error bit. Send an error condition to the host. These bits are cleared as soon as the response (reporting the error) is sent out.

•S: Status bit. These bits serve as information fields only, and do not alter the execution of the command being responded to. These bits are persistent, they are set and cleared in accordance with the card status.

•R: Exceptions are detected by the card during the command interpretation and validation phase (Response Mode).

•X: Exceptions are detected by the card during command execution phase (Execution Mode).

Clear condition

•A: According to current state of the card.

•B: Always related to the previous command. Reception of a valid command will clear it (with a delay of one command).

•C: Cleared by read

Table 36-31. Card status

Bits	Identifier	Type	Value	Description	Clear Condition
31	OUT_OF_RANGE	ERX	'0'= no error '1'= error	The command's argument was out of the allowed range for this card.	C
30	ADDRESS_ERROR	ERX	'0'= no error '1'= error	A misaligned address which did not match the block length was used in the command.	C
29	BLOCK_LEN_ERROR	ERX	'0'= no error '1'= error	The transferred block length is not allowed for this card, or the number of transferred bytes does not match the block length.	C

Bits	Identifier	Type	Value	Description	Clear Condition
28	ERASE_SEQ_ERROR	ER	’0’= no error ’1’= error	An error in the sequence of erase commands occurred.	C
27	ERASE_PARAM	ERX	’0’= no error ’1’= error	An invalid selection of write-blocks for erase occurred.	C
26	WP_VIOLATION	ERX	’0’= not protected ’1’= protected	Set when the host attempts to write to a protected block or to the temporary or permanent write protected card.	C
25	CARD_IS_LOCKED	SX	‘0’ = card unlocked ‘1’ = card locked	When set, signals that the card is locked by the host	A
24	LOCK_UNLOCK_FAILED	ERX	’0’= no error ’1’= error	Set when a sequence or password error has been detected in lock/unlock card command.	C
23	COM_CRC_ERROR	ER	’0’= no error ’1’= error	The CRC check of the previous command failed.	B
22	ILLEGAL_COMMAND	ER	’0’= no error ’1’= error	Command not legal for the card state.	B
21	CARD_ECC_FAILED	ERX	’0’= success ’1’= failure	Card internal ECC was applied but failed to correct the data.	C
20	CC_ERROR	ERX	’0’= no error ’1’= error	Internal card controller error.	C
19	ERROR	ERX	’0’= no error ’1’= error	A general or an unknown error occurred during the operation.	C
18	UNDERRUN	ERX	’0’= no error ’1’= error	Only for *e*•MMC. The card could not sustain data transfer in stream read mode.	C
17	OVERRUN	ERX	’0’= no error ’1’= error	Only for *e*•MMC. The card could not sustain data programming in stream write mode.	C
16	CID/ CSD_OVERWRITE	ERX	’0’= no error ’1’= error	Can be either one of the following errors: - The read only section of the CSD does not match the card content. - An attempt to reverse the copy (set as original) or permanent WP(unprotected) bits was made.	C
15	WP_ERASE_SKIP	ERX	’0’= not protected	Set when only partial address	C

Bits	Identifier	Type	Value	Description	Clear Condition
			’1’= protected	space was erased due to existing write protected blocks or the temporary or permanent write protected card was erased.	
14	CARD_ECC_DISABLED	SX	’0’= enabled ’1’= disabled	The command has been executed without using the internal ECC.	A
13	ERASE_RESET	SR	’0’= cleared ’1’= set	An erase sequence was cleared before executing because an out of erase sequence command was received.	C
[12:9]	CURRENT_STATE	SX	0 = idle 1 = ready 2 = identification 3 = stand by 4 = transfer 5 = send data 6 = receive data 7 = programming 8 = disconnect 9 = Bus-Test 10 = sleep 11-14 = reserved 15 = reserved for I/O mode	The state of the card when receiving the command. If the command execution causes a state change, it will be visible to the host in the response to the next command. The four bits are interpreted as a binary coded number between 0 and 15. Sleep state for for *e*•MMC only.	B
8	READY_FOR_DATA	SX	’0’= not ready ’1’= ready	Corresponds to buffer empty signaling on the bus.	A
7	SWITCH_ERROR	EX	’0’= no error ’1’= switch error	If set, the card don’t switch to the expected mode as requested by the SWITCH command.	B
6	Reserved				
5	APP_CMD	SR	’0’= enabled ’1’= disabled	The card will expect ACMD, or an indication that the command has been interpreted as ACMD.	C
4	Reserved				
3	AKE_SEQ_ERROR	ER	’0’= no error ’1’= error	Only for SD memory. Error in the sequence of the authentication process.	C

Bits	Identifier	Type	Value	Description	Clear Condition
2	Reserved for application specific commands.				
[1:0]	Reserved for manufacturer test mode.				

Note: 18, 17, 7 bits are only for *e*•MMC. 14, 3 bits are only for SD memory.

SD status register

The SD Status contains status bits that are related to the SD Memory Card proprietary features and may be used for future application-specific usage. The size of the SD Status is one data block of 512 bits. The content of this register is transmitted to the Host over the DAT bus along with a 16-bit CRC. The SD Status is sent to the host over the DAT bus as a response to ACMD13 (CMD55 followed with CMD13). ACMD13 can be sent to a card only in 'transfer state' (card is selected). The SD Status structure is described below.

The same abbreviation for 'type' and 'clear condition' were used as for the Card Status above.

Table 36-32. SD status

Bits	Identifier	Type	Value	Description	Clear Condition
[511:510]	DAT_BUS_WIDTH	SR	'00'= 1 (default) '01'= reserved '10'= 4 bit width '11'= reserved	Shows the currently defined data bus width that was defined by SET_BUS_WIDTH command	A
509	SECURED_MODE	SR	'0'= Not in the mode '1'= In Secured Mode	Card is in Secured Mode of operation (refer to the "SD Security Specification").	A
[508:496]	reserved				
[495:480]	SD_CARD_TYPE	SR	The following cards are currently defined: '0000'= Regular SD RD/WR Card. '0001'= SD ROM Card '0002'= OTP	In the future, the 8 LSBs will be used to define different variations of an SD Memory Card (Each bit will define different SD Types). The 8 MSBs will be used to define SD Cards that do not comply with current SD Physical Layer Specification.	A
[479:448]	SIZE_OF_PROTECTED_AREA	SR	Size of protected area	(See below)	A
[447:440]	SPEED_CLASS	SR	Speed class of the card	(See below)	A

Bits	Identifier	Type	Value	Description	Clear Condition
[439:432]	PERFORMANCE_MOVE	SR	Performance of move indicated by 1 [MB/s] step.	(See below)	A
[431:428]	AU_SIZE	SR	Size of AU	(See below)	A
[427:424]	reserved				
[423:408]	ERASE_SIZE	SR	Number of AUs to be erased at a time	(See below)	A
[407:402]	ERASE_TIMEOUT	SR	Timeout value for erasing areas specified by UNIT_OF_ERASE_AU	(See below)	A
[401:400]	ERASE_OFFSET	SR	Fixed offset value added to erase time.	(See below)	A
[399:312]	reserved				
[311:0]	reserved for manufacturer				

SIZE_OF_PROTECTED_AREA

Setting this field differs between SDSC and SDHC/SDXC.

In case of SDSC Card, the capacity of protected area is calculated as follows:

Protected Area = SIZE_OF_PROTECTED_AREA* MULT * BLOCK_LEN.

SIZE_OF_PROTECTED_AREA is specified by the unit in MULT*BLOCK_LEN.

In case of SDHC and SDXC Cards, the capacity of protected area is calculated as follows:

Protected Area = SIZE_OF_PROTECTED_AREA

SIZE_OF_PROTECTED_AREA is specified by the unit in byte.

SPEED_CLASS

This 8-bit field indicates the Speed Class.

00h: Class 0

01h: Class 2

02h: Class 4

03h: Class 6

04h: Class 10

05h–FFh: Reserved

PERFORMANCE_MOVE

This 8-bit field indicates Pm and the value can be set by 1 [MB/sec] step. If the card does not move useing RUs, Pm should be considered as infinity. Setting to FFh means infinity. The minimum value of Pm is defined in *Table 36-33. Performance move field*.

Table 36-33. Performance move field

PERFORMANCE_MOVE	Value Definition
00h	Sequential Write
01h	1 [MB/sec]
02h	2 [MB/sec]
.....	.....
FEh	254 [MB/sec]
FFh	Infinity

AU_SIZE

This 4-bit field indicates AU Size and the value can be selected from 16 KB.

Table 36-34. AU_SIZE field

AU_SIZE	Value Definition
0h	Not Defined
1h	16 KB
2h	32 KB
3h	64 KB
4h	128 KB
5h	256 KB
6h	512 KB
7h	1 MB
8h	2 MB
9h	4 MB
Ah	8 MB
Bh	12 MB
Ch	16 MB
Dh	24 MB
Eh	32 MB
Fh	64 MB

The maximum AU size, depends on the card capacity, is defined in *Table 36-34. AU_SIZE field*. The card can set any AU size specified in *Table 36-35. Maximum AU size* that is less

than or equal to the maximum AU size. The card should set smaller AU size as possible.

Table 36-35. Maximum AU size

Card Capacity	up to 64MB	up to 256MB	up to 512MB	up to 32GB	up to 2TB
Maximum AU Size	512 KB	1 MB	2 MB	4 MB1	64MB

ERASE_SIZE

This 16-bit field indicates N_{ERASE}. When N_{ERASE} of AUs are erased, the timeout value is specified by ERASE_TIMEOUT (Refer to ERASE_TIMEOUT). The host should determine proper number of AUs to be erased in one operation so that the host can indicate progress of erase operation. If this field is set to 0, the erase timeout calculation is not supported.

Table 36-36. Erase size field

ERASE_SIZE	Value Definition
0000h	Erase Time-out Calculation is not supported.
0001h	1 AU
0002h	2 AU
0003h	3 AU
.....	.....
FFFFh	65535 AU

ERASE_TIMEOUT

This 6-bit field indicates the T_{ERASE} and the value indicates erase timeout from offset when multiple AUs are erased as specified by ERASE_SIZE. The range of ERASE_TIMEOUT can be defined as up to 63 seconds and the card manufacturer can choose any combination of ERASE_SIZE and ERASE_TIMEOUT depending on the implementation. Once ERASE_TIMEOUT is determined, it determines the ERASE_SIZE. The host can determine timeout for any number of AU erase by the equation below.

$$\text{Erase timeout of X AU} = \frac{T_{ERASE}}{N_{ERASE}} * X + T_{OFFSET} \quad (36\text{-}1)$$

Table 36-37. Erase timeout field

ERASE_TIMEOUT	Value Definition
00	Erase Time-out Calculation is not supported.
01	1 [sec]
02	2 [sec]
03	3 [sec]
.....	.....
63	63 [sec]

If ERASE_SIZE field is set to 0, this field shall be set to 0.

ERASE_OFFSET

This 2-bit field indicates the T_{OFFSET} and one of four values can be selected. This field is

meaningless if ERASE_SIZE and ERASE_TIMEOUT fields are set to 0.

Table 36-38. Erase offset field

ERASE_OFFSET	Value Definition
0h	0 [sec]
1h	1 [sec]
2h	2 [sec]
3h	3 [sec]

36.5. Programming sequence

36.5.1. Card identification

The host will be in card identification mode after reset and while it is looking for new cards on the bus. While in card identification mode the host resets all the cards, validates operation voltage range, identifies cards and asks them to publish Relative Card Address (RCA). This operation is done to each card separately on its own CMD line. All data communication in the Card Identification Mode uses the command line (CMD) only.

During the card identification process, the card shall operate in the clock frequency of the identification clock rate F_{OD} (400 kHz).

Card reset

The command GO_IDLE_STATE (CMD0) is the software reset command and sets *e*•MMC and SD memory card into Idle State regardless of the current card state. The reset command (CMD0) is only used for memory or the memory portion of Combo cards. In order to reset an I/O only card or the I/O portion of a combo card, use CMD52 to write 1 to the RES bit in the CCCR. Cards in Inactive State are not affected by this command.

After power-on by the host, all cards are in Idle State, including the cards that have been in Inactive State before. After power-on or CMD0, all cards' CMD lines are in input mode, waiting for start bit of the next command. The cards are initialized with a default relative card address (RCA) and with a default driver strength with 400 KHz clock frequency.

Operating voltage range validation

At the start of communication between the host and the card, the host may not know the card supported voltage and the card may not know whether it supports the current supplied voltage. To verify the voltage, the following commands are defined in the related specification.

The SEND_OP_COND (CMD1 for *e*•MMC), SD_SEND_OP_COND (ACMD41 for SD memory), IO_SEND_OP_COND (CMD5 for SD I/O) command is designed to provide hosts with a mechanism to identify and reject cards which do not match the V_{DD} range desired by the host. This is accomplished by the host sending the required V_{DD} voltage window as the

operand of this command. If the card cannot perform data transfer in the specified range it must discard itself from further bus operations and go into Inactive State. Otherwise, the card shall respond sending back its V_{DD} range.

If the card can operate on the supplied voltage, the response echoes back the supply voltage and the check pattern that were set in the command argument.

If the card cannot operate on the supplied voltage, it returns no response and stays in idle state. It is mandatory to issue CMD8 prior to ACMD41 to initialize SDHC Card. Receipt of CMD8 makes the cards realize that the host supports the Physical Layer Version 2.00 and the card can enable new functions.

Card identification process

The card identification process differs in different cards. The card can be of the type *e*•MMC, SD, or SD I/O. All types of SD I/O cards are supported, that is, SDIO_IO_ONLY, SDIO_MEM_ONLY, and SDIO COMBO cards. The identification process sequence includes the following steps:

1. Check if the card is connected.

2. Identify the card type; SD, *e*•MMC, or SD I/O.
– Send CMD5 first. If a response is received, then the card is SD I/O
– If not, send ACMD41; if a response is received, then the card is SD.
– Otherwise, the card is an *e*•MMC.

3. Initialization the card according to the card type.
Use a clock source with a frequency = F_{OD} (that is, 400 KHz) and use the following command sequence:
– SD card - Send CMD0, ACMD41, CMD2, CMD3.
– SDHC card - send CMD0, CMD8, ACMD41, CMD2, CMD3.
– SD I/O - Send CMD52, CMD0, CMD5, if the card doesn't have memory port, send CMD3; otherwise send ACMD41, CMD11 (optional), CMD2, and CMD3.
– *e*•MMC - Send CMD0, CMD1, CMD2, CMD3.

36.5.2. Boot operation

If the CMD line is held low for 74 clock cycles (or CMD0 with the argument of 0xFFFFFFFA) before the first command is issued, the card recognizes that boot mode is being initiated and starts preparing boot data internally.

The partition from which the host will read the boot data can be selected in advance using EXT_CSD byte [179], bits [5:3]. The data size that the host can read during boot operation can be calculated as 128KB × BOOT_SIZE_MULT (EXT_CSD byte [226]).

The host can choose to use single data rate mode with backward-compatible interface timing, SDR with high-speed interface timing or DDR timing (if it supported) by setting a proper value in EXT_CSD register byte [177] bits [4:3]. EXT_CSD register byte [228], bit 2 tells the host if

the high-speed timing during boot is supported by the device. EXT_CSD register byte [228], bit 1 tells the host if the dual data rate mode during boot is supported by the device.

HS200 mode is not supported during boot operation.

The host can choose to receive boot acknowledge from the card by setting “1” in EXT_CSD register, byte [179], bit 6, so that the host can recognize that the card is operating in boot mode.

If boot acknowledge is enabled, the card has to send acknowledge pattern “010” to the host within 50ms after the CMD line goes low. If boot acknowledge is disabled, the card will not send out acknowledge pattern “010.”

Normal boot operation

If CMD line is held low lasts for at least 74 clock cycles, the card will recognize that the boot mode is being initiated before issuing the first command. Within one second after the CMD line becomes low, the card starts to run in SDIO_DAT sends the first boot code data online. The host must enable SDIO_CMD line remains low until all boot data is read. The host can connect the SDIO_CMD line is pulled up to terminate the boot mode.

Figure 36-16. Boot operation timing

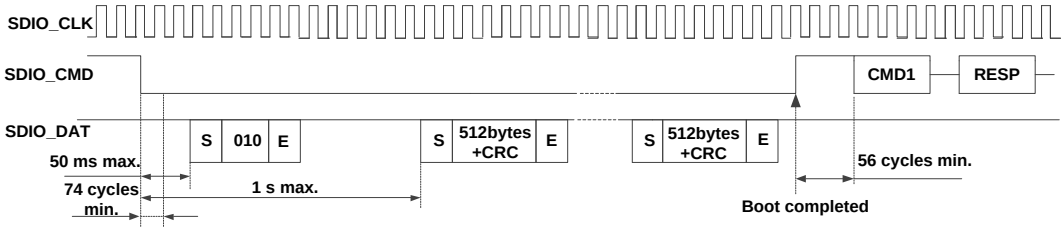

To perform the normal boot process the following steps needed:

1. Reset or power-up the card.

2. If a boot enable ACK, need to enable the ACKEN, set the ACKTIME and enable the ACKFAIL and ACKTO flag.

3. Enable the data reception by setting DATADIR to 1 and the number of data to be received in DATALEN. Enable the DTTMOUT, DTEND and CMDSEND interrupts for end of command confirmation.

4. Set BOOTMOD to 0, select the normal boot operation mode, and enable boot in BOOTMODEN. Boot acknowledge timeout is enabled and CMD line remains low.

5. The ACKTO or ACKFAIL flag can be used to detect whether the boot acknowledgment is received.
– If the boot acknowledgment is not received in time, the ACKTO flag will appears.
– If an incorrect boot acknowledgment is received, the ACKFAIL flag appears.

6. When all boot data has been received the DTEND flag appears.
– If data CRC fails the DTCRCERR flag will be set.

– If data timeout the DTTMOUT flag will be set.

7. When last boot data has been received, read boot data from the FIFO until FIFO is empty (RFE = 1) after which DTEND flag is then set.

8. The boot process can be terminated by clearing BOOTMODEN bit, and the SDIO_CMD line becomes high. After 56 cycles, a CMDSEND flag is generated to indicate that the boot procedure is over and the card is ready to receive a new command.

Alternative boot operation

After card reset or power-up, if the master send CMD0 (with argument of 0xFFFFFFFA) after 74 clock cycles, before CMD1 is issued, the card recognizes that alternative boot mode is being initiated and starts preparing boot data internally. Within 1 second after the CMD0 (with argument of 0xFFFFFFFA) has been sent, the slave card starts to send the first boot data on the SDIO_DAT line(s). The host can terminate boot mode by issuing CMD0 (with argument of 0xF0F0F0F0).

Figure 36-17. Alternative Boot operation timing

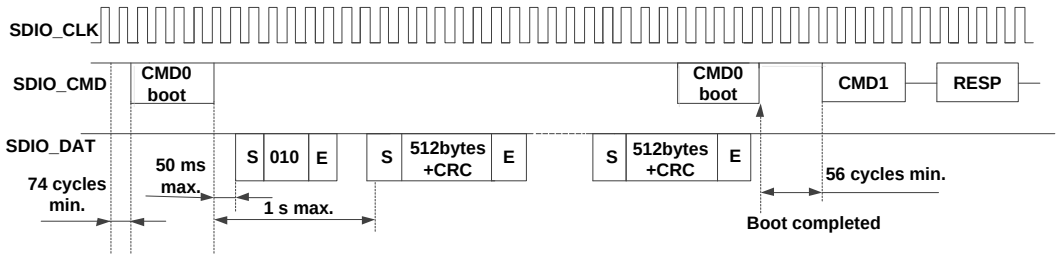

The following steps are perform the alternative boot sequence:

1. Reset or power-up the card.

2. If a boot enable ACK, need to enable the ACKEN, set the ACKTIME and enable the ACKFAIL and ACKTO flag.

3. Enable the data reception by setting DATADIR to 1 and the number of data to be received in DATALEN. Enable the DTTMOUT and DTEND flags.

4. Set BOOTMOD to 1, select the alternative boot operation mode, load the CMD0 (with argument of 0xFFFFFFFA) in the command registers. Enable CMDSEND flag for end of command confirmation, enable boot in BOOTMODEN, and set CSMEN to 1. When the command has been sent the CMDSEND flag is generated, and the BOOTMODEN bit must be cleared.

5. The ACKTO or ACKFAIL flag can be used to detect whether the boot acknowledgment is received.
– If the boot acknowledgment is not received in time, the ACKTO flag will appears.
– If an incorrect boot acknowledgment is received, the ACKFAIL flag appears.

6. When all boot data has been received, the DTEND flag appears.

– If data CRC fails the DCRCFAIL flag will be set.
– If data timeout the DTIMEOUT flag will be set.

7. When last boot data has been received, read boot data from the FIFO until FIFO is empty (RFE = 1) after which DTEND flag is then set.

8. The BOOTMODEN bit must be cleared, before terminating the boot procedure by sending CMD0 (Reset) with alternative boot.This causes the CMDSEND flag to occur 56 cycles after the command. The CMDSEND flag indicates that the boot procedure is over and the card is ready to receive a new command. When the RESET command has been sent successfully, the BOOTMOD has to be cleared to terminate the boot operation.

36.5.3. No data commands

To send any non-data command, the software needs to program the SDIO_CMDCTL register and the SDIO_CMDAGMT register with appropriate parameters. Using these two registers, the host forms the command and sends it to the command bus. The host reflects the errors in the command response through the error bits of the SDIO_STAT register.

When a response is received the host sets the CMDRECV (CRC check passed) or CCRCERR (CRC check error) bit in the SDIO_STAT register. A short response is copied in SDIO_RESP0, while a long response is copied to all four response registers. The SDIO_RESP3 bit 31 represents the MSB, and the SDIO_RESP0 bit 0 represents the LSB of a long response.

36.5.4. Single block or multiple block write

During block write (CMD24 - 27) one or more blocks of data are transferred from the host to the card. The block consists of start bits (1 or 4 bits LOW), data block, CRC and end bits(1 or 4 bits HIGH). If the CRC fails, the card indicates the failure on the SDIO_DAT line and the transferred data are discarded and not written, and all further transmitted blocks are ignored.

If the host uses partial blocks whose accumulated length is not block aligned, block misalignment is not allowed (CSD parameter WRITE_BLK_MISALIGN is not set), the card will detect the block misalignment error before the beginning of the first misaligned block. The card shall set the ADDRESS_ERROR error bit in the status register, and while ignoring all further data transfer. The write operation will also be aborted if the host tries to write data on a write protected area. In this case, however, the card will set the WP_VIOLATION bit (in the status register).

Programming of the CID and CSD registers does not require a previous block length setting. The transferred data is also CRC protected. If a part of the CSD or CID register is stored in ROM, then this unchangeable part must match the corresponding part of the receive buffer. If this match fails, then the card reports an error and does not change any register contents.

Some cards may require long and unpredictable time to write a block of data. After receiving a block of data and completing the CRC check, the card will begin writing and hold the DAT0

line low if its write buffer is full and unable to accept new data from a new WRITE_BLOCK command. The host may poll the status of the card with a SEND_STATUS command (CMD13) at any time, and the card will respond with its status. The status bit READY_FOR_DATA indicates whether the card can accept new data or whether the write process is still in progress). The host may deselect the card by issuing CMD7 (to select a different card) which will displace the card into the Disconnect State and release the DAT line without interrupting the write operation. When reselecting the card, it will reactivate busy indication by pulling DAT to low if programming is still in progress and the write buffer is unavailable.

For SD card. Setting a number of write blocks to be pre-erased (ACMD23) will make a following Multiple Block Write operation faster compared to the same operation without preceding ACMD23. The host will use this command to define how many number of write blocks are going to be send in the next write operation.

Steps involved in a single-block or multiple-block write are:

1. Write the data size in bytes in the SDIO_DATALEN register.

2. Write the block size in bytes (BLKSZ) in the SDIO_DATACTL register; the host sends data in blocks of size BLKSZ.

3. Program SDIO_CMDAGMT register with the data address to which data should be written.

4. Program the SDIO_CMDCTL register. For SD memory and *e*•MMC cards, use CMD24 for a single-block write and CMD25 for a multiple-block write. For SD I/O cards, use CMD53 for both single-block and multiple-block transfers.

5. Write data to SDIO_FIFO.

6. Software should look for data error interrupts. If required, software can terminate the data transfer by sending the STOP command (CMD12).

7. When a DTEND interrupt is received, the data transfer is over. For an open-ended block transfer, if the byte count is 0, the software must send the STOP command. If the byte count is not 0, then upon completion of a transfer of a given number of bytes, the host should send the STOP command.

36.5.5. Single block or multiple block read

Block read is block oriented data transfer. The basic unit of data transfer is a block whose maximum size is defined in the CSD (READ_BL_LEN), it is always 512 bytes. If READ_BL_PARTIAL(in the CSD) is set, smaller blocks whose starting and ending address are entirely contained within 512 bytes boundary may be transmitted.

CMD17 (READ_SINGLE_BLOCK) initiates a block read and after completing the transfer, the card returns to the Transfer state. CMD18 (READ_MULTIPLE_BLOCK) starts a transfer of several consecutive blocks. CRC is appended to the end of each block, ensuring data transfer integrity.

Block Length set by CMD16 can be set up to 512 bytes regardless of READ_BL_LEN.

Blocks will be continuously transferred until a STOP_TRANSMISSION command (CMD12) is issued. The stop command has an execution delay due to the serial command transmission. The data transfer stops after the end bit of the stop command.

When the last block of user area is read using CMD18, the host should ignore OUT_OF_RANGE error that may occur even the sequence is correct.

If the host uses partial blocks whose accumulated length is not block aligned and block misalignment is not allowed, the card shall detect a block misalignment at the beginning of the first misaligned block, set the ADDRESS_ERROR error bit in the status register, abort transmission and wait in the Data State for a stop command.

Steps involved in a single block or multiple block read are:

1. Write the data size in bytes in the SDIO_DATALEN register.

2. Write the block size in bytes (BLKSZ) in the SDIO_DATACTL register. The host expects data from the card in blocks of size BLKSZ each.

3. Program the SDIO_CMDAGMT register with the data address of the beginning of a data read.

4. Program the SDIO_CMDCTL. For SD and *e*•MMC cards, using CMD17 for a single-block read and CMD18 for a multiple-block read. For SD I/O cards, using CMD53 for both single-block and multiple-block transfers. After writing to the CMD register, the host starts executing the command, when the command is sent to the bus, the CMDRECV flag is set.

5. Software should look for data error interrupts. If required, software can terminate the data transfer by sending a STOP command.

6. The software should read data from the FIFO and make space in the FIFO for receiving more data.

7. When a DTEND interrupt is received, the software should read the remaining data in the FIFO.

36.5.6. Stream write and stream read (e•MMC only)

Stream write

Stream write (CMD20) starts the data transfer from the host to the card beginning from the starting address until the host issues a stop command. If partial blocks are allowed (if CSD parameter WRITE_BL_PARTIAL is set) the data stream can start and stop at any address within the card address space, otherwise it shall start and stop only at block boundaries. Since the amount of data to be transferred is not determined in advance, CRC cannot be used.

If the host provides an out of range address as an argument to CMD20, the card will reject the command, remain in Tran state and respond with the ADDRESS_OUT_OF_RANGE bit

set.

Note that the stream write command works only on a 1 bit bus configuration (on DAT0). If CMD20 is issued in other bus configurations, it is regarded as an illegal command.

In order to sustain data transfer in stream mode of the card, the time it takes to receive the data (defined by the bus clock rate) must be less than the time it takes to program it into the main memory field (defined by the card in the CSD register). Therefore, the maximum clock frequency for the stream write operation is given by the following formula:

$$\text{max write frequence} = \min\left(\text{TRAN_SPEED}, \frac{8*2^{\text{WRITE_BL_LEN}}-100*\text{NSAC}}{\text{TAAC*R2W_FACTOR}}\right) \quad (36\text{-}2)$$

TRAN_SPEED: Max bus clock frequency.

WRITE_BL_LEN: Max write data block length.

NSAC: Data read access-time 2 in CLK cycles.

TAAC: Data read access-time 1.

R2W_FACTOR: Write speed factor.

All the parameters are defined in CSD register. If the host attempts to use a higher frequency, the card may not be able to process the data and will stop programming, and while ignoring all further data transfer, wait (in the Receive-data-State) for a stop command. As the host sends CMD12, the card will respond with the TXURE bit set and return to Transfer state

Stream read

There is a stream oriented data transfer controlled by READ_DAT_UNTIL_STOP (CMD11). This command instructs the card to send its data, starting at a specified address, until the host sends a STOP_TRANSMISSION command (CMD12). The stop command has an execution delay due to the serial command transmission. The data transfer stops after the end bit of the stop command.

If the host provides an out of range address as an argument to CMD11, the card will reject the command, remain in Transfer state and respond with the ADDRESS_OUT_OF_RANGE bit set.

Note that the stream read command works only on a 1 bit bus configuration (on DAT0). If CMD11 is issued in other bus configurations, it is regarded as an illegal command.

If the end of the memory range is reached while sending data, and no stop command has been sent yet by the host, the contents of the further transferred payload is undefined. As the host sends CMD12 the card will respond with the ADDRESS_OUT_OF_RANGE bit set and return to Tran state.

In order to sustain data transfer in stream mode of the card, the time it takes to transmit the data (defined by the bus clock rate) must be less than the time it takes to read it out of the main memory field (defined by the card in the CSD register). Therefore, the maximum clock

frequency for stream read operation is given by the following formula:

$$\text{max read frequence} = \min\left(\text{TRAN_SPEED}, \frac{8*2^{\text{READ_BL_LEN}}-100*\text{NSAC}}{\text{TAAC*R2W_FACTOR}}\right) \quad (36\text{-}3)$$

TRAN_SPEED: Max bus clock frequency.

READ_BL_LEN: Max read data block length.

NSAC: Data read access-time 2 in CLK cycles.

TAAC: Data read access-time 1.

R2W_FACTOR: Write speed factor.

All the parameters are defined in CSD register. If the host attempts to use a higher frequency, the card may not be able to process the data and will stop programming, and while ignoring all further data transfer, wait (in the Receive-data-State) for a stop command. As the host sends CMD12, the card will respond with the RXORE bit set and return to Transfer state

36.5.7. Erase

The erasable unit of the *e*•MMC/SD memory is the “Erase Group”; Erase group is measured in write blocks which are the basic writable units of the card. The size of the Erase Group is a card specific parameter and defined in the CSD.

The host can erase a contiguous range of Erase Groups. Starting the erase process is a three steps sequence. First the host defines the start address of the range using the ERASE_GROUP_START (CMD35)/ERASE_WR_BLK_START(CMD32) command, next it defines the last address of the range using the ERASE_GROUP_END (CMD36)/ERASE_WR_BLK_END(CMD33) command and finally it starts the erase process by issuing the ERASE (CMD38) command. The address field in the erase commands is an Erase Group address in byte units. The card will ignore all LSB’s below the Erase Group size, effectively rounding the address down to the Erase Group boundary.

If an erase command (CMD35, CMD36, and CMD38) is received out of the defined erase sequence, the card shall set the ERASE_SEQ_ERROR bit in the status register and reset the whole sequence.

If the host provides an out of range address as an argument to CMD35 or CMD36, the card will reject the command, respond with the ADDRESS_OUT_OF_RANGE bit set and reset the whole erase sequence.

If an ‘non erase’ command (neither of CMD35, CMD36, CMD38 or CMD13) is received, the card shall respond with the ERASE_RESET bit set, reset the erase sequence and execute the last command.

If the erase range includes write protected blocks, they shall be left intact and only the non-protected blocks shall be erased. The WP_ERASE_SKIP status bit in the status register shall be set.

As described above for block write, the card will indicate that an erase is in progress by holding DAT0 low. The actual erase time may be quite long, and the host may issue CMD7 to deselect the card.

36.5.8. Bus width selection

After the host has verified the functional pins on the bus it should change the bus width configuration.

For *e*•MMC, using the SWITCH command (CMD6).The bus width configuration is changed by writing to the BUS_WIDTH byte in the Modes Segment of the EXT_CSD register (using the SWITCH command to do so). After power-on or software reset, the contents of the BUS_WIDTH byte is 0x00. If the host tries to write an invalid value, the BUS_WIDTH byte is not changed and the SWITCH_ERROR bit is set. This register is write only.

For SD memory, using SET_BUS_WIDTH command (ACMD6) to change the bus width. The default bus width after power up or GO_IDLE_STATE command (CMD0) is 1 bit. SET_BUS_WIDTH (ACMD6) is only valid in a transfer state, which means that the bus width can be changed only after a card is selected by SELECT/DESELECT_CARD (CMD7).

36.5.9. Protection management

In order to allow the host to protect data against erase or write, three methods for the cards are supported in the card:

CSD register for card protection (optional)

The entire card may be write protected by setting the permanent or temporary write protect bits in the CSD. Some cards support write protection of groups of sectors by setting the WP_GRP_ENABLE bit in the CSD. It is defined in units of WP_GRP_SIZE erase groups as specified in the CSD. The SET_WRITE_PROT command sets the write protection of the addressed write protected group, and the CLR_WRITE_PROT command clears the write protection of the addressed write protected group.

The High Capacity SD Memory Card does not support Write Protection and does not respond to write protection commands (CMD28, CMD29 and CMD30).

Write protect switch on the card (SD memory and SD I/O card)

A mechanical sliding tablet on the side of the card will be used by the user to indicate that a given card is write protected or not. If the sliding tablet is positioned in such a way that the window is open it means that the card is write protected. If the window is closed the card is not write protected.

Password card Lock/Unlock Operation

The Password Card Lock/Unlock protection is described in ***Card Lock/Unlock operation***.

36.5.10. Card Lock/Unlock operation

The password protection feature enables the host to lock a card while providing a password, which later will be used for unlocking the card. The password and its size are kept in a 128-bit PWD and 8-bit PWD_LEN registers, respectively. These registers are non-volatile so that a power cycle will not erase them.

Locked cards respond to (and execute) all commands in the basic command class (class 0), ACMD41, CMD16 and lock card command class (class 7). Thus, the host is allowed to reset, initialize, select, query for status, but not to access data on the card. If the password was previously set (the value of PWD_LEN is not 0), the card will be locked automatically after power on.

Similar to the existing CSD register write commands, the lock/unlock command is available in "transfer state" only. This means that it does not include an address argument and the card shall be selected before using it.

The card lock/unlock command has the structure and bus transaction type of a regular single block write command. The transferred data block includes all the required information of the command (password setting mode, PWD itself, card lock/unlock etc.). ***Table 36-39. Lock card data structure*** describes the structure of the command data block.

Table 36-39. Lock card data structure

Byte	Bit 7	Bit 6	Bit 5	Bit 4	Bit 3	Bit 2	Bit 1	Bit 0
0	Reserved(all set to 0)				ERASE	LOCK_UNLOCK	CLR_PWD	SET_PWD
1	PWDS_LEN							
2	Password data(PWD)							
……								
PWDS_LEN+1								

ERASE: 1 Defines Forced Erase Operation. In byte 0, bit 3 will be set to 1 (all other bits shall be 0). All other bytes of this command will be ignored by the card.

LOCK/UNLOCK: 1 = Locks the card. 0 = Unlock the card (note that it is valid to set this bit together with SET_PWD but it is not allowed to set it together with CLR_PWD).

CLR_PWD: 1 = Clears PWD.

SET_PWD: 1 = Set new password to PWD.

PWDS_LEN: Defines the following password(s) length (in bytes). In case of a password change, this field includes the total password length of old and new passwords. The password length is up to 16 bytes. In case of a password change, the total length of the old password and the new password can be up to 32 bytes.

Password data: In case of setting a new password, it contains the new password. In case of a password change, it contains the old password followed by the new password.

Setting the password

- Select a card (CMD7), if not previously selected.
- Define the block length (CMD16), given by the 8-bit card lock/unlock mode, the 8-bit password size (in bytes), and the number of bytes of the new password. In the case that a password replacement is done, then the block size shall consider that both passwords (the old and the new one) are sent with the command.
- Send the Card Lock/Unlock command with the appropriate data block size on the data line including the 16-bit CRC. The data block shall indicate the mode (SET_PWD), the length (PWDS_LEN) and the password itself. In the case that a password replacement is done, then the length value (PWDS_LEN) shall include both passwords (the old and the new one) and the password data field shall include the old password (currently used) followed by the new password. Note that the card shall handle the calculation of the new password length internally by subtracting the old password length from PWDS_LEN field.
- In the case that the sent old password is not correct (not equal in size and content), then the LOCK_UNLOCK_FAILED error bit will be set in the status register and the old password does not change. In the case that the sent old password is correct (equal in size and content), then the given new password and its size will be saved in the PWD and PWD_LEN registers, respectively.

Reset the password

- Select a card (CMD7), if not previously selected.
- Define the block length (CMD16), given by the 8-bit card lock/unlock mode, the 8-bit password size (in bytes), and the number of bytes of the currently used password.
- Send the card lock/unlock command with the appropriate data block size on the data line including the 16-bit CRC. The data block shall indicate the mode CLR_PWD, the length (PWDS_LEN), and the password itself. If the PWD and PWD_LEN content match the sent password and its size, then the content of the PWD register is cleared and PWD_LEN is set to 0. If the password is not correct, then the LOCK_UNLOCK_FAILED error bit will be set in the status register.

Locking a card

- Select a card (CMD7), if not previously selected.
- Define the block length (CMD16), given by the 8-bit card lock/unlock mode, the 8-bit password size (in bytes), and the number of bytes of the currently used password.
- Send the card lock/unlock command with the appropriate data block size on the data line including the 16-bit CRC. The data block shall indicate the mode LOCK, the length (PWDS_LEN) and the password itself.

If the PWD content is equal to the sent password, then the card will be locked and the card-locked status bit will be set in the status register. If the password is not correct, then the LOCK_UNLOCK_FAILED error bit will be set in the status register.

Unlocking the card

- Select a card (CMD7), if not previously selected.
- Define the block length (CMD16), given by the 8-bit card lock/unlock mode, the 8-bit

password size (in bytes), and the number of bytes of the currently used password.

- Send the card lock/unlock command with the appropriate data block size on the data line including the 16-bit CRC. The data block shall indicate the mode UNLOCK, the length (PWDS_LEN) and the password itself.

If the PWD content is equal to the sent password, then the card will be unlocked and the card-locked status bit will be cleared in the status register. If the password is not correct, then the LOCK_UNLOCK_FAILED error bit will be set in the status register.

36.5.11. Sleep

The *e*•MMC card can switch between Sleep state and Standby state through CMD5. In the sleep state, the power consumption of the card is minimized, and the Vcc power can be turned off at this time.

– Sleep command: The bit 15 as set to 1 in CMD5 argument.
– Awake command: The bit 15 as set to 0 in CMD5 argument.

Use Sleep command to start the state transition from standby state to sleep state. The card indicates the transition phase busy by pulling down the SDIO_DAT0 line. No further commands should be sent during the busy. When the device stops pulling down the SDIO_DAT0 line, indicates reach sleep state.

Use Awake command to start the state transition from sleep state to standby state. The card indicates indicates the transition phase busy by pulling down the SDIO_DAT0 line. No further commands should be sent during the busy. When the device stops pulling down the SDIO_DAT0 line, indicates reach standby state.

To set the card to sleep, follow these steps:
1. Enable DAT0BSYEND interrupt.
2. Send CMD5 (Sleep command).
3. When DAT0BSYEND is interrupted, the card is in Sleep state.
4. It is allowed to turn off the Vcc power.

To set the card to Standby, follow these steps:
1. Turn on the Vcc power supply and wait for it to reach the minimum working voltage.
2. Enable DAT0BSYEND interrupt.
3. Send CMD5 (Awake command).
4. When DAT0BSYEND interrupt occurs, the card is in Standby mode.

During the Sleep state the Vcc power supply may be switched off. This is to enable even further system power consumption saving. The Vcc supply is allowed to be switched off only after the Sleep state has been reached (the card has stopped to pull down the SDIO_DAT0 line). The Vcc supply have to be ramped back up at least to the min operating voltage level before the state transition from Sleep state to Standby state is allowed to be initiated (Awake command).

Figure 36-18. CMD5 timing

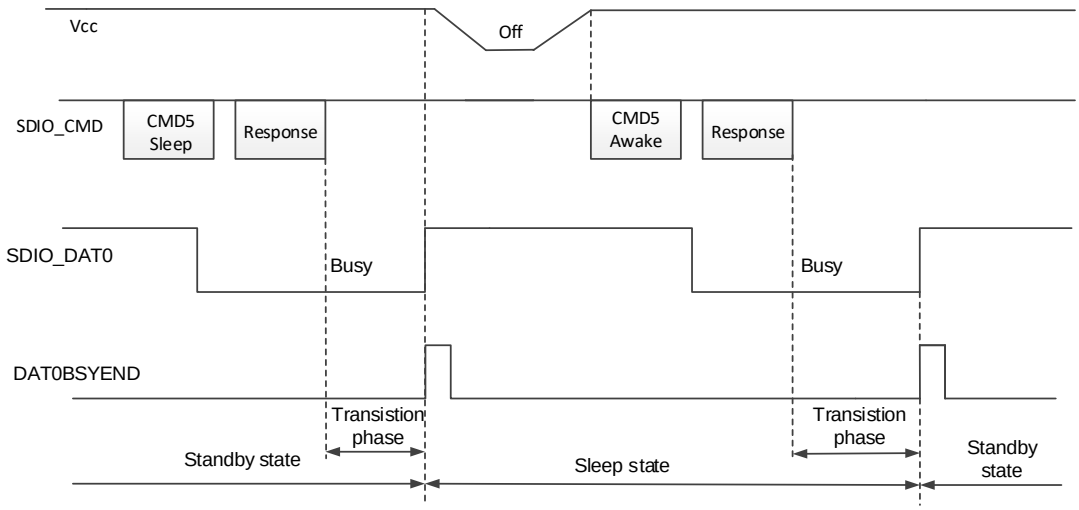

36.5.12. CMD12 send timing

CMD12 (stop transmission command) is used to stop or abort the data transmission. The card data transmission is terminated after 2 clock cycles after the end bit of a CMD12.

All data read and write commands can be terminated at any time by a CMD12. If data transmission is in progress, the CMD12 send sequence includes the following steps:

1. Configure the CMD12 command in registers and set the TRSTOP register. When DSM receives the command, it will generate CSM stop signal.

2. Clear WAITDEND register.

3. When IDMAEN = 0, set FIFOREST bit to 1.
– Host sends data, when the CMDRECV flag appears, the firmware will stop transfer data to the FIFO. Subsequently set FIFOREST bit to 1 and flushes the FIFO.
– Host receives data, when the CMDRECV flag appears, the firmware will read the remaining data from the the FIFO. Subsequently set FIFOREST bit to 1.

4. When IDMAEN = 1, hardware operates the FIFO.
– Host sends data, when the Abort flag appears, the hardware will stop IDMA. Subsequently flushes the FIFO.
– Host receives data, when the Abort flag appears, the hardware uses IDMA to transfer the remaining FIFO data to RAM.

5. When FIFO is empty/reset, the DATABOR flag is generated

Table 36-40. CMD12 instructions

Data operation type	CMD12 Description
Multiple block write with pre-defined block count	The Device will accept the requested number of data blocks, terminate the transaction and return to TRANSFER state. Stop command is not required at the end of this type of multiple block

Data operation type	CMD12 Description
	write, unless terminated with an error.
Multiple block read with pre-defined block count	The card will transfer the requested number of data blocks, terminate the transaction and return to TRANSFER state. Stop command is not required at the end of this type of multiple block read, unless terminated with an error.
Open-ended Multiple block write	The number of blocks for the write multiple block operation is not defined. The Device will continuously accept and program data blocks until a stop transmission command is received.
Open-ended Multiple block read	The number of blocks for the read multiple block operation is not defined. The Device will continuously transfer data blocks until a stop transmission command is received
stream write	The data flow is terminated by CMD12.
stream read	The data flow is terminated by CMD12.

CMD12 affect block operation

To stop block transmission at the end of data, the end bit of CMD12 should be sent after the end bit of last block.

When data is written to the card, the CMD12 end bit is sent after the CRC token end bit of the data block is written. This requires the CMD12 transmission process to follow the block transmission timing.

To stop the Open-ended Multiple block write operation, follow these steps：

1. Before starting data transmission, set TRANSMOD[1:0] to "11".

2. Wait for DTEND to be set, the data sent by DSM will not exceed SDIO_DATALEN.

3. CSM sents CMD12. The card is set to idle state.

When reading data from the card, the end bit of CMD12 should be sent as early as possible. That is, when the card reads the last bit of the data block.

To stop the Open-ended Multiple block read operation, follow these steps：

1. Before starting data transmission, set TRANSMOD[1:0] to "11".

2. Wait for DTEND to be set, even if the card is sending more data, the data received by DSM will not be greater than SDIO_DATALEN.

3. CSM sents CMD12. The card sending data is stopped and the card is set to idle state.

CMD12 affect stream operation

To stop stream transmission after the last byte to be transmitted, the CMD12 end bit timing should be sent at the end of the last byte of the data stream. Follow these steps to write stream data:

1. Initialize DSM, set TRANSMOD[1:0] to "10".

2. Set TREN to 1 and sent stream write command.

3. Preload CMD12 in command registers with the TRSTOP bit set.

4. Configure the CSM to send a command only after WAITDEND = 1 end of last data of DATALEN.

5. CSM sents CMD12. the stream data end bit and command end bit are aligned.
– If DATALEN > 5, CMD12 is waited in the CSM to be aligned with the data transfer end bit.
– If DATALEN < 5, CMD12 will start early and DSM will keep WaitS state, to align the data transfer end bit with the CMD12 end bit.

6. The stream data writing process can be stopped at any time by clearing the WAITDEND bit. This will cause the preloaded CMD12 to be sent immediately and stop the stream writing process.

Figure 36-19. CMD12 stream timing

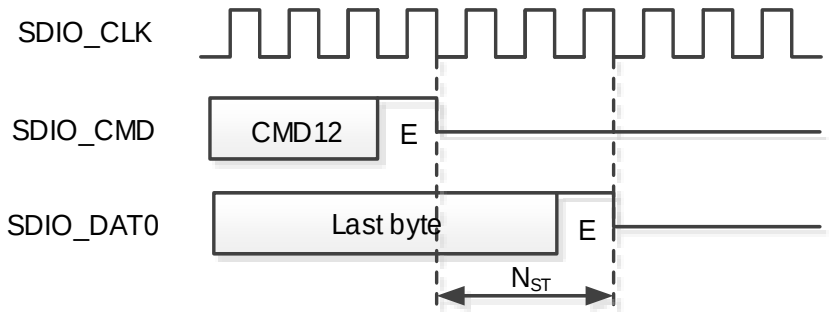

To stop the stream transfer read process after the last byte, the CMD12 end bit timing should be sent after the last byte of the data stream.

Note: 1. Wait for DTEND = 1 (data receiving completed) before sending the CMD12. Even if the card is sending more data. the data received by DSM will not be greater than SDIO_DATALEN. 2. The SDIO does not receive any more data when DATACNT = 0, even when the card continues sending data.

36.6. Specific operations

36.6.1. UHS-I

Ultra High Speed Bus Speed Mode (SDR12, SDR25, SDR50, DDR50 and SDR104) phase I voltage switch (UHS-1) mode requires the support voltage switching from 3.3V to 1.8V. The default voltage is 3.3V when the card is powered on. A signal voltage switch sequence is started by this CMD11.When the voltage sequence is completed successfully, the card will enter the UHS-I mode with the default SDR12, and the input and output timings of the card will change.

Figure 36-20. Multiple block 4-Bit write interrupt cycle timing

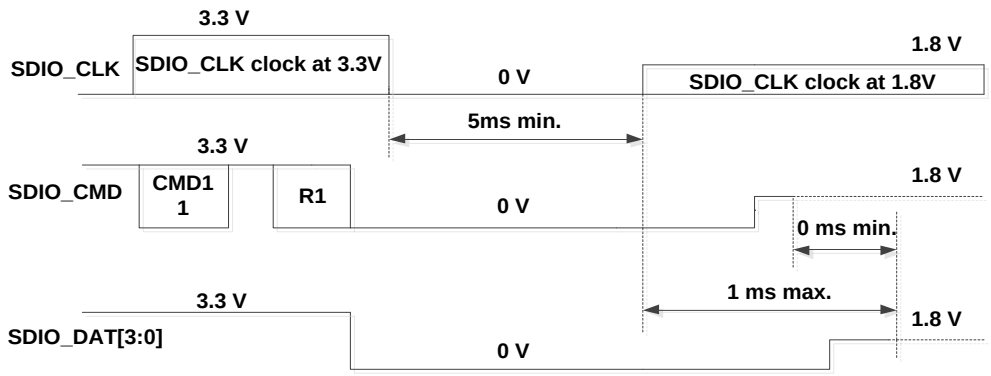

The following steps are perform the signal voltage switch sequence:

1. The SDIO_CLK clock frequency must be set in the range 100 kHz - 400 kHz, before starting of Voltage Switch operation.

2. The host sets VSEN = 1 for starts the Voltage Switch, and then sends the CMD11.

3. Host receiving card R1 response.
– If the response CRC passes, the Voltage Switch process will continue and the host will no longer drive the CMD and SDIO_DAT[3:0] signals until the voltage switching sequence is completed. After several cycles of response, SDIO_CLK will stop and CLKSTOP flag will be set to 1.
– If the response CRC fails (CCRCERR=1) or the response timeout (CMDTMOUT =1), the Voltage Switch procedure is stopped.

4. At the next clock after the R1 response, the card drives CMD and SDIO_DAT[3:0] to low.

5. After receiving the R1 response, the host monitors the SDIO_DAT0 line by reading the DAT0BSY register. The SDIO_DAT0 line is sampled after 2 SDIO_CLK clock cycles following the response. The Firmware may read the DAT0BSY register bit following the CLKSTOP flag.
– When DAT0BSY is detected as high level, the firmware switches the Voltage regulator to 1.8V. After that, it instructs the SDIO to start timing the critical section of the Voltage Switch sequence by setting register bit VSSTART to 1. The hardware continues to stop the SDIO_CLK by holding it low for at least 5 ms.
– When DAT0BSY is detected as high level, the firmware will abort the Voltage Switch sequence and cycle power the device card.

6. When SDIO_CLK is low, the card will start to switch the signal voltage to 1.8V.

7. The SDIO hardware will restart the SDIO_CLK at least 5 ms later.

8. Within 1 ms after SDIO_CLK switch is detected, the card will drive the CMD and DAT[3:0] to high level for at least 1 clock cycle, and then stop driving the CMD and DAT[3:0].

9. After 1 ms after the SDIO_CLK is restarted, the SDIO hardware will sample SDIO_DAT0 into DAT0BSY and generate VSEND flag.

10. If VSEND flag is set, the host needs to read DAT0BSY register to judge SDIO_DAT0 line, to confirm whether the voltage switching process is completed:

– If DAT0BSY is high, Voltage Switch has been completed successfully.

– If DAT0BSY is low, Voltage Switch has failed, the host cycles the card power.

36.7. Register definition

SDIO base address: 0x5200 7000

SDIO1 base address: 0x4802 2400

36.7.1. Power control register (SDIO_PWRCTL)

Address offset: 0x00

Reset value: 0x0000 0000

This register has to be accessed by word(32-bit).

31	30	29	28	27	26	25	24	23	22	21	20	19	18	17	16
Reserved															

15	14	13	12	11	10	9	8	7	6	5	4	3	2	1	0
Reserved											DIRPS	VSEN	VSSTART	PWRCTL[1:0]	
											rw	rw	rw	rw	

Bits	Fields	Descriptions
31:5	Reserved	Must be kept at reset value.
4	DIRPS	Command and data direction polarity selection bit This bit can only be configured when the PWRCTL[1:0] bits are cleared. 0: Direction signal is low, the voltage transceiver IOs driven as output. 1: Direction signal is high, the voltage transceiver IOs driven as output.
3	VSEN	Voltage switch enable bit This bit is used to stop the SDIO_CLK after the voltage switch command response. This bit can only be configured by firmware when CSMEN bit is cleared. 0: SDIO_CLK clock kept unchanged, after successfully received command response. 1: SDIO_CLK clock stopped, after successfully received command response.
2	VSSTART	Voltage switch start bit This bit is used to start the timing of the voltage switch sequence. 0: Voltage switch sequence not active and not started 1: Voltage switch sequence active or started
1:0	PWRCTL[1:0]	SDIO power control bits These bits control the SDIO state, card input or output. These bits can only be configured when the SDIO is in the power down state. 00: State after reset (reset: SDIO is disabled, clock is stoped, SDIO_CMD and SDIO_DAT are HiZ state, and SDIO_CLK is driven low), if written 00, SDIO power off (power off: SDIO is disabled, clock is stoped, SDIO_CLK, SDIO_CMD, SDIO_DAT are driven high).

01: Reserved (When written 01, PWRCTRL value does not change)

10: Power-cycle, the SDIO is disabled and the clock to the card is stopped, SDIO_DAT, SDIO_CMD and SDIO_CLK are driven low.

11: SDIO Power on. After power on, SDIO enables have 74 SDIO_CLK delay, any further write is ignored, PWRCTL[1:0] value keeps 11.

36.7.2. Clock control register (SDIO_CLKCTL)

Address offset: 0x04

Reset value: 0x0000 0000

This register controls the output clock SDIO_CLK.

This register has to be accessed by word(32-bit).

31	30	29	28	27	26	25	24	23	22	21	20	19	18	17	16
Reserved										RCLK[1:0]		BUSSP	DRSEL	HWEN	CLKEDGE
rw										rw		rw	rw	rw	rw

15	14	13	12	11	10	9	8	7	6	5	4	3	2	1	0
BUSMODE[1:0]		Reserved	CLKPWRSAV	Reserved		DIV[9:0]									
rw			rw			rw									

Bits	Fields	Descriptions
31:22	Reserved	Must be kept at reset value.
21:20	RCLK[1:0]	Receive clock selection bits These bits can only be configured when the (DATSTA = 0) and (CMDSTA = 0). 00: select SDIO_IN_CLK clock 01: select SDIO_CLKIN clock 10: select SDIO_FB_CLK clock 11: Reserved (select SDIO_IN_CLK clock)
19	BUSSP	Bus speed mode selection bit This bit can only be configured when the (DATSTA = 0) and (CMDSTA = 0). 0: DS, HS, SDR12, SDR25 bus speed. 1: SDR50, DDR50, SDR104 bus speed.
18	DRSEL	Data rate selection bit This bit can only be configured when the (DATSTA = 0) and (CMDSTA = 0). 0: SDR selected 1: DDR selected
17	HWEN	Hardware flow control enable bit If this bit is set, the meaning of the TFF and RFF flags will change. This bit can only be configured when the (DATSTA = 0) and (CMDSTA = 0). 0: HW flow control is disabled 1: HW flow control is enabled

16	CLKEDGE	Command and data SDIO_CLK dephasing selection bit These bits can only be written when the (DATSTA = 0) and (CMDSTA = 0). If DIV = 0, this bit has no effect. Data and Command change on SDIO_CLK falling edge. 0: if DIV > 0 and DRSEL = 0, command and data changed on the same CK_SDIO falling edge succeeding the rising edge of SDIO_CLK. if DIV > 0 and DRSEL = 1, command changed on the CK_SDIO falling edge succeeding the rising edge of SDIO_CLK. Data changed on the CK_SDIO falling edge succeeding a SDIO_CLK edge. SDIO_CLK edge occurs on CK_SDIO rising edge. 1: if DIV > 0 and DRSEL = 0, command and data changed on the same CK_SDIO rising edge generating the SDIO_CLK falling edge. if DIV > 0 and DRSEL= 1, command changed on the same CK_SDIO rising edge generating the SDIO_CLK falling edge. Data changed on the SDIO_CLK falling edge succeeding a SDIO_CLK edge. SDIO_CLK edge occurs on CK_SDIO rising edge.
15:14	BUSMODE[1:0]	SDIO card bus mode control bit These bits can only be configured when the (DATSTA = 0) and (CMDSTA = 0). 00: 1-bit SDIO card bus mode selected (SDR only), SDIO_DAT0. 01: 4-bit SDIO card bus mode selected, SDIO_DAT [3:0]. 10: 8-bit SDIO card bus mode selected, SDIO_DAT[7:0]. 11: No effect
13	Reserved	Must be kept at reset value.
12	CLKPWRSAV	SDIO_CLK clock dynamic switch on/off for power saving. This bit can only be configured when the (DATSTA = 0) and (CMDSTA = 0). This bit controls SDIO_CLK clock dynamic switch on/off when the bus is idle for power saving. 0: SDIO_CLK clock is always on 1: SDIO_CLK closed when bus idle
11:10	Reserved	Must be kept at reset value.
9:0	DIV[9:0]	Clock division These bits can only be configured when the (DATSTA = 0) and (CMDSTA = 0). This field defines the division factor to generator SDIO_CLK clock to card. The SDIO_CLK is divider from CK_SDIO, and the SDIO_CLK frequency = CK_SDIO / (DIV[9:0] * 2). 0x000: SDIO_CLK = CK_SDIO / 1 (Does not support DDR) 0x001: SDIO_CLK = CK_SDIO / 2 0x002: SDIO_CLK = CK_SDIO / 4 …… 0x3FF: SDIO_CLK = CK_SDIO / 2046

Note: When card is in identification mode, the frequency of SDIO_CLK must be less than 400 kHz.

If the RCA are assigned to all cards, you can change the clock frequency to the maximum card bus frequency.

Between Two write accesses to this register, it needs at least 7 HCLK periods which used to sync the registers to SDIO_CLK clock domain.

36.7.3. Command argument register (SDIO_CMDAGMT)

Address offset: 0x08
Reset value: 0x0000 0000

This register defines 32bit command argument, which will be used as part of the command (bit 39 to bit 8).

This register has to be accessed by word(32-bit).

31	30	29	28	27	26	25	24	23	22	21	20	19	18	17	16
CMDAGMT[31:16]															
rw															

15	14	13	12	11	10	9	8	7	6	5	4	3	2	1	0
CMDAGMT[15:0]															
rw															

Bits	Fields	Descriptions
31:0	CMDAGMT[31:0]	SDIO card command argument This field defines the card command argument which sent to card. This field is the bits [39:8] of command message. If the command message contains an argument, this field must update before writing SDIO_CMDCTL register when sending a command. These bits can only be configured by firmware when CSMEN = 0.

36.7.4. Command control register (SDIO_CMDCTL)

Address offset: 0x0C
Reset value: 0x0000 0000

The SDIO_CMDCTL register contains the command index and other command control bits to control command state machine.

This register has to be accessed by word(32-bit).

31	30	29	28	27	26	25	24	23	22	21	20	19	18	17	16
Reserved															CMDSR
															rw

15	14	13	12	11	10	9	8	7	6	5	4	3	2	1	0
BOOTMODEN	BOOTMOD	HOLD	CSMEN	WAITDEND	INTWAIT	CMDRESP[1:0]		TRSTOP	TREN	CMDIDX[5:0]					

rw rw rw rw rw rw rw rw rw rw

Bits	Fields	Descriptions
31:17	Reserved	Must be kept at reset value.
16	CMDSR	Suspend or Resume command and signals interrupt period start/end bit. This bit can only be configured by firmware when the CSMEN = 0. 0: No effect. 1: If TREN = 0, the CSM treats the command as a Suspend command. If TREN = 1, the CSM treats the command as a Resume command.
15	BOOTMODEN	Boot mode procedure enable bit 0: Boot disable 1: Boot enable
14	BOOTMOD	Boot mode selection bit. This bit can only be configured by firmware when the CSMEN = 0. 0: Normal boot mode 1: Alternative boot mode
13	HOLD	Hold DSM transmission and reception of new data block If HOLD bit is set, the DSM does not move from the DS_WaitS state to the DS_Send state or from the DS_WaitR state to the DS_Receive state. This bit can only be configured by firmware when the CSMEN = 0. 0: No effect 1: Hold transmission and reception data.
12	CSMEN	Command state machine (CSM) enable bit This bit can only be configured by firmware. It is cleared by hardware. 0: Command state machine disable (stay on CS_Idle) 1: Command state machine enable
11	WAITDEND	Waits for ends of data transfer. If this bit is set, the command state machine starts to send a command must wait the end of data transfer. 0: No effect 1: Wait the end of data transfer
10	INTWAIT	Interrupt wait request If this bit is cleared in Wait state, the interrupt mode is aborted. 0: No effect. 1: No command timeout and wait interrupt while the command response.
9:8	CMDRESP[1:0]	Waits command response type bits These bits define the response type after sending a command message. These bits can only be written by firmware when the CSMEN = 0. 00: No response 01: Short response

		10: Short response (No CRC) 11: Long response
7	TRSTOP	Data transfer stop command mode enable bit Transfer stop command mode (CSM treats the command as a data stop transfer command). This bit can only be configured by firmware when the CSMEN = 0. 0: No effect 1: If command is sent, enable transfer stop command mode and stops DSM data transfer.
6	TREN	Data transfer command mode enable bit Transfer command mode (CSM treats the command as a data transfer command). This bit can only be configured by firmware when the CSMEN = 0. 0: No effect 1: If command is sent, enable transfer command mode and stops the interrupt period.
5:0	CMDIDX[5:0]	Command index These bits can only be configured by firmware when the CSMEN = 0. This field defines the command index to be sent to card.

Note: Between Two write accesses to this register, it needs at least seven HCLK clock periods which used to sync the registers to SDIO_CLK clock domain.

The e•MMC can send two kinds of response: short responses, 48 bits, or long responses,136 bits.

SD card and SD I/O card can send only short responses, the argument can vary according to the type of response: the software distinguishes the type of response according to the send command.

36.7.5. Command index response register (SDIO_RSPCMDIDX)

Address offset: 0x10
Reset value: 0x0000 0000

This register has to be accessed by word(32-bit).

31	30	29	28	27	26	25	24	23	22	21	20	19	18	17	16
Reserved															

15	14	13	12	11	10	9	8	7	6	5	4	3	2	1	0
Reserved										RSPCMDIDX[5:0]					
												r			

Bits	Fields	Descriptions
31:6	Reserved	Must be kept at reset value.

5:0	RSPCMDIDX[5:0]	Last response command index Read-only bits field. This field contains the command index of the last command response received. If the response doesn't have the command index (long response and short response of R3), the content of this register is undefined.

36.7.6. Response register (SDIO_RESPx x = 0..3)

Address offset: 0x14+(4*x), x = 0..3

Reset value: 0x0000 0000

These register contains the content of the last card response received.

This register has to be accessed by word(32-bit).

31	30	29	28	27	26	25	24	23	22	21	20	19	18	17	16
RESPx[31:16]															
r															

15	14	13	12	11	10	9	8	7	6	5	4	3	2	1	0
RESPx[15:0]															
r															

Bits	Fields	Descriptions
31:0	RESPx[31:0]	Card state. The content of the response, see ***Table 36-41. SDIO_RESPx register at different response type.***

The short response is 32 bits, the long response is 127 bits (bit 128 is the end bit 0).

Table 36-41. SDIO_RESPx register at different response type

Register	Short response	Long response
SDIO_RESP0	Card response[31:0]	Card response[127:96]
SDIO_RESP1	reserved	Card response [95:64]
SDIO_RESP2	reserved	Card response [63:32]
SDIO_RESP3	reserved	Card response [31:1],plus bit 0

36.7.7. Data timeout register (SDIO_DATATO)

Address offset: 0x24

Reset value: 0x0000 0000

This register has to be accessed by word(32-bit).

31	30	29	28	27	26	25	24	23	22	21	20	19	18	17	16
DATATO[31:16]															
rw															

15	14	13	12	11	10	9	8	7	6	5	4	3	2	1	0
DATATO[15:0]															
rw															

Bits	Fields	Descriptions
31:0	DATATO[31:0]	Data timeout period These bits define the data timeout period count by SDIO_CLK. When the DSM enter the state WaitR or BUSY, the internal counter which loads from this register starts decrement. The DSM timeout and enter the state Idle and set the DTTMOUT flag when the counter decreases to 0. These bits can only be written when the (DATSTA = 0) and (CMDSTA = 0).

Note: The data timeout register and the data length register must be updated before being written to the data control register when need a data transfer.

36.7.8. Data length register (SDIO_DATALEN)

Address offset: 0x28

Reset value: 0x0000 0000

This register has to be accessed by word(32-bit).

31	30	29	28	27	26	25	24	23	22	21	20	19	18	17	16
Reserved							DATALEN[24:16]								
											rw				

15	14	13	12	11	10	9	8	7	6	5	4	3	2	1	0
DATALEN[15:0]															
rw															

Bits	Fields	Descriptions
31:25	Reserved	Must be kept at reset value.
24:0	DATALEN[24:0]	Data transfer length This register defined the number of bytes to be transferred. When the data transfer starts, the data counter loads this register and starts decrement. These bits can only be written when the DATSTA = 0. If DRSEL = 1, DATALEN is truncated to a multiple of 2. Indicates that the last data odd byte is not transferred. If DATALEN = 0, no data byte are transfered, when requested by a CSMEN and TREN = 1 also no command is transfered. DATAEN and CSMEN are cleared.

Note: If block data transfer selected, the content of this register must be a multiple of the block size (refer to SDIO_DATACTL). The data timeout register and the data length register must be updated before being written to the data control register when need a data transfer.

For multibyte transfer the value in the data length register must be between 1 and 512.

36.7.9. Data control register (SDIO_DATACTL)

Address offset: 0x2C

Reset value: 0x0000 0000

This register controls the DSM.

This register has to be accessed by word(32-bit).

31	30	29	28	27	26	25	24	23	22	21	20	19	18	17	16
Reserved															

15	14	13	12	11	10	9	8	7	6	5	4	3	2	1	0
Reserved		FIFORESET	ACKEN	Reserved				BLKSZ[3:0]				TRANSMOD[1:0]		DATADIR	DATAEN
		rw	rw					rw				rw		rw	rw

Bits	Fields	Descriptions
31:14	Reserved	Must be kept at reset value.
13	FIFOREST	FIFO buffer reset, flush all data This bit can only be configured by firmware when IDMAEN = 0 and DATSTA = 1. If a transfer error or transfer hold occurs, this bit takes effect. And automatically cleared by hardware when DSMACT = 0. 0: No effect 1: Flush any remaining data and reset the FIFO pointers
12	ACKEN	Boot acknowledgment enable bit This bit can only be configured by firmware when DATSTA = 0. 0: Boot acknowledgment disabled 1: Boot acknowledgment enabled
11:8	Reserved	Must be kept at reset value.
7:4	BLKSZ[3:0]	Data block size These bits defined the block size when data transfer is block transfer. These bits can only be written by firmware when DATSTA = 0. 0000: block size = 2^0 = 1 byte 0001: block size = 2^1 = 2 bytes 0010: block size = 2^2 = 4 bytes 0011: block size = 2^3 = 8 bytes 0100: block size = 2^4 = 16 bytes 0101: block size = 2^5 = 32 bytes 0110: block size = 2^6 = 64 bytes 0111: block size = 2^7 = 128 bytes 1000: block size = 2^8 = 256 bytes 1001: block size = 2^9 = 512 bytes 1010: block size = 2^{10} = 1024 bytes 1011: block size = 2^{11} = 2048 bytes 1100: block size = 2^{12} = 4096 bytes 1101: block size = 2^{13} = 8192 bytes 1110: block size = 2^{14} = 16384 bytes 1111: reserved

		When DATALEN is not a multiple of BLKSZ, the transfered data is truncated at a multiple of BLKSZ. If DRSEL = 1, BLKSZ = 0000 must no data are transferred.
3:2	TRANSMOD[1:0]	Data transfer mode These bits can only be written by firmware when DATSTA = 0. 00: Block count data transfer 01: Multibyte data transfer (only SD/SD I/O) 10: Stream transfer (only *e*•MMC) 11: Transfer ends with CMD12
1	DATADIR	Data transfer direction This bit can only be configured by firmware when DATSTA = 0. 0: Write data to card. 1: Read data from card.
0	DATAEN	Data transfer enable bit This bit is only used to transfer data when the associated data transfer command is not used. This bit can only be configured by firmware when DATSTA = 0. This bit is cleared by hardware when data transfer completes. 0: No effect 1: Start data transfer without CSM

36.7.10. Data counter register (SDIO_DATACNT)

Address offset: 0x30

Reset value: 0x0000 0000

This register is read only. When the DSM from Idle to WaitR or WaitS, it loads value from data length register (SDIO_DATALEN). It decrements with the data transferred, when it reaches 0, the flag DTEND is set.

This register has to be accessed by word(32-bit).

31	30	29	28	27	26	25	24	23	22	21	20	19	18	17	16
Reserved							DATACNT[24:16]								
											r				

15	14	13	12	11	10	9	8	7	6	5	4	3	2	1	0
DATACNT[15:0]															
r															

Bits	Fields	Descriptions
31:25	Reserved	Must be kept at reset value.
24:0	DATACNT[24:0]	Data count value Read-only bits field. When these bits are read, the number of remaining data bytes to be transferred is returned.

Note: This register should be read only after transmission is completed or held. When reading data after an error event, the read count value may be different from the actual number of data bytes transferred.

36.7.11. Status register (SDIO_STAT)

Address offset: 0x34
Reset value: 0x0000 0000

This register is read only. The following descripts the types of flag:

The flags of bit [28:21, 11:0] can only be cleared by writing 1 to the corresponding bit in interrupt clear register (SDIO_INTC).

The flags of bit [20:12] are changing depend on the hardware logic.

This register has to be accessed by word(32-bit).

31	30	29	28	27	26	25	24	23	22	21	20	19	18	17	16
Reserved			IDMAEND	IDMAERR	CLKSTOP	VSEND	ACKTO	ACKFAIL	SDIOINT	DAT0BSYEND	DAT0BSY	RFE	TFE	RFF	TFF
			r	r	r	r	r	r	r	r	r	r	r	r	r

15	14	13	12	11	10	9	8	7	6	5	4	3	2	1	0
RFH	TFH	DATSTA	CMDSTA	DATABOR	DTBLKEND	DATHOLD	DTEND	CMDSEND	CMDRECV	RXORE	TXURE	DTTMOUT	CMDTMOUT	DTCRCERR	CCRCERR
r	r	r	r	r	r	r	r	r	r	r	r	r	r	r	r

Bits	Fields	Descriptions
31:29	Reserved	Must be kept at reset value.
28	IDMAEND	IDMA transfer end
27	IDMAERR	IDMA transfer error
26	CLKSTOP	SDIO_CLK stopped in Voltage switch procedure
25	VSEND	Voltage switch critical timing section end
24	ACKTO	Boot acknowledgment timeout
23	ACKFAIL	Boot acknowledgment received and check fail
22	SDIOINT	SD I/O interrupt received
21	DAT0BSYEND	End of CMD response, card DAT0 line signal changed from busy to ready.
20	DAT0BSY	End of CMD response and a second time 2 clock cycles after the CMD response, card signals busy on DAT0 line. This is a hardware status flag only, does not generate an interrupt.
19	RFE	Receive FIFO is empty This is a hardware status flag only, does not generate an interrupt.
18	TFE	Transmit FIFO is empty

		This bit is cleared when one FIFO location becomes full.
17	RFF	Receive FIFO is full This bit is cleared when one FIFO location becomes empty.
16	TFF	Transmit FIFO is full This is a hardware status flag only, does not generate an interrupt. This bit is cleared when one FIFO location becomes empty.
15	RFH	Receive FIFO is half full: at least half the number of words can be read in the FIFO This bit is cleared when the FIFO becomes (half + 1) empty.
14	TFH	Transmit FIFO is half empty: at least half the number of words can be written into the FIFO. This bit is cleared when the FIFO becomes (half + 1) full.
13	DATSTA	Data path active state This is a hardware status flag only, does not generate an interrupt.
12	CMDSTA	Command path active state This is a hardware status flag only, does not generate an interrupt.
11	DATABOR	Data transfer aborted by CMD12
10	DTBLKEND	Data block sent/received (CRC check passed)
9	DATHOLD	Data transfer hold
8	DTEND	Data end (data counter, SDIO_DATACNT is zero)
7	CMDSEND	Command sent (no response required)
6	CMDRECV	Command response received (CRC check passed)
5	RXORE	Received FIFO overrun error occurs
4	TXURE	Transmit FIFO underrun error occurs
3	DTTMOUT	Data timeout The data timeout period depends on the SDIO_DATATO register.
2	CMDTMOUT	Command response timeout The command timeout period has a fixed value of 64 SDIO_CLK clock periods.
1	DTCRCERR	Data block sent/received (CRC check failed)
0	CCRCERR	Command response received (CRC check failed)

Note: If using IDMA mode, the FIFO Interrupt cannot be enabled.

36.7.12. Interrupt clear register (SDIO_INTC)

Address offset: 0x38

Reset value: 0x0000 0000

This register is write only. Writing 1 to the bit can clear the corresponding bit in the SDIO_STAT register.

This register has to be accessed by word(32-bit).

31	30	29	28	27	26	25	24	23	22	21	20	19	18	17	16
Reserved			IDMAENDC	IDMAERRC	CLKSTOPC	VSENDC	ACKTOC	ACKFAILC	SDIOINTC	DAT0BSYENDC	Reserved				
			w	w	w	w	w	w	w	w					

15	14	13	12	11	10	9	8	7	6	5	4	3	2	1	0
Reserved				DATABORC	DTBLKENDC	DATHOLDC	DTENDC	CMDSENDC	CMDRECVC	RXOREC	TXUREC	DTTMOUTC	CMDTMOUTC	DTCRCERRC	CCRCERRC
				w	w	w	w	w	w	w	w	w	w	w	w

Bits	Fields	Descriptions
31:29	Reserved	Must be kept at reset value.
28	IDMAENDC	IDMAEND flag clear bit Write 1 to this bit to clear the flag.
27	IDMAERRC	IDMAERR flag clear bit Write 1 to this bit to clear the flag.
26	CLKSTOPC	CLKSTOP flag clear bit Write 1 to this bit to clear the flag.
25	VSENDC	VSEND flag clear bit Write 1 to this bit to clear the flag.
24	ACKTOC	ACKTO flag clear bit Write 1 to this bit to clear the flag.
23	ACKFAILC	ACKFAIL flag clear bit Write 1 to this bit to clear the flag.
22	SDIOINTC	SDIOINT flag clear bit Write 1 to this bit to clear the flag.
21	DAT0BSYENDC	DAT0BSYEND flag clear bit Write 1 to this bit to clear the flag.
20:12	Reserved	Must be kept at reset value.
11	DATABORC	DATABOR flag clear bit Write 1 to this bit to clear the flag.
10	DTBLKENDC	DTBLKEND flag clear bit Write 1 to this bit to clear the flag.
9	DATHOLDC	DATHOLD flag clear bit Write 1 to this bit to clear the flag.

8	DTENDC	DTEND flag clear bit Write 1 to this bit to clear the flag.
7	CMDSENDC	CMDSEND flag clear bit Write 1 to this bit to clear the flag.
6	CMDRECVC	CMDRECV flag clear bit Write 1 to this bit to clear the flag.
5	RXOREC	RXORE flag clear bit Write 1 to this bit to clear the flag.
4	TXUREC	TXURE flag clear bit Write 1 to this bit to clear the flag.
3	DTTMOUTC	DTTMOUT flag clear bit Write 1 to this bit to clear the flag.
2	CMDTMOUTC	CMDTMOUT flag clear bit Write 1 to this bit to clear the flag.
1	DTCRCERRC	DTCRCERR flag clear bit Write 1 to this bit to clear the flag.
0	CCRCERRC	CCRCERR flag clear bit Write 1 to this bit to clear the flag.

36.7.13. Interrupt enable register (SDIO_INTEN)

Address offset: 0x3C

Reset value: 0x0000 0000

This register enables the corresponding interrupt in the SDIO_STAT register.

This register has to be accessed by word(32-bit).

31	30	29	28	27	26	25	24	23	22	21	20	19	18	17	16
Reserved			IDMAENDIE	IDMAERRIE	CLKSTOPIE	VSENDIE	ACKTOIE	ACKFAILIE	SDIOINTIE	DAT0BSYENDIE	Reserved		TFEIE	RFFIE	Reserved
			rw	rw	rw	rw	rw	rw	rw	rw			rw	rw	

15	14	13	12	11	10	9	8	7	6	5	4	3	2	1	0
RFHIE	TFHIE	Reserved		DATABORIE	DTBLKENDIE	DATHOLDIE	DTENDIE	CMDSENDIE	CMDRECVIE	RXOREIE	TXUREIE	DTTMOUTIE	CMDTMOUTIE	DTCRCERRIE	CCRCERRIE
rw	rw			rw	rw	rw	rw	rw	rw	rw	rw	rw	rw	rw	rw

Bits	Fields	Descriptions
31:29	Reserved	Must be kept at reset value.
28	IDMAENDIE	IDMA transfer end interrupt enable
27	IDMAERRIE	IDMA transfer error interrupt enable

26	CLKSTOPIE	Voltage Switch clock stopped interrupt enable
25	VSENDIE	Voltage switch critical timing section end interrupt enable
24	ACKTOIE	Boot acknowledgment timeout enable
23	ACKFAILIE	Boot acknowledgment received and check fail interrupt enable
22	SDIOINTIE	SD I/O interrupt received interrupt enable Write 1 to this bit to enable the interrupt.
21	DAT0BSYENDIE	DAT0 line signal changed from busy to ready interrupt enable.
20:19	Reserved	Must be kept at reset value.
18	TFEIE	Transmit FIFO empty interrupt enable Write 1 to this bit to enable the interrupt.
17	RFFIE	Receive FIFO full interrupt enable Write 1 to this bit to enable the interrupt.
16	Reserved	Must be kept at reset value.
15	RFHIE	Receive FIFO half full interrupt enable Write 1 to this bit to enable the interrupt.
14	TFHIE	Transmit FIFO half empty interrupt enable Write 1 to this bit to enable the interrupt.
13:12	Reserved	Must be kept at reset value.
11	DATABORIE	Data transfer abort interrupt enable Write 1 to this bit to enable the interrupt.
10	DTBLKENDIE	Data block end interrupt enable Write 1 to this bit to enable the interrupt.
9	DATHOLDIE	Data hold interrupt enable Write 1 to this bit to enable the interrupt.
8	DTENDIE	Data end interrupt enable Write 1 to this bit to enable the interrupt.
7	CMDSENDIE	Command sent interrupt enable Write 1 to this bit to enable the interrupt.
6	CMDRECVIE	Command response received interrupt enable Write 1 to this bit to enable the interrupt.
5	RXOREIE	Received FIFO overrun error interrupt enable Write 1 to this bit to enable the interrupt.
4	TXUREIE	Transmit FIFO underrun error interrupt enable

		Write 1 to this bit to enable the interrupt.
3	DTTMOUTIE	Data timeout interrupt enable Write 1 to this bit to enable the interrupt.
2	CMDTMOUTIE	Command response timeout interrupt enable Write 1 to this bit to enable the interrupt.
1	DTCRCERRIE	Data CRC fail interrupt enable Write 1 to this bit to enable the interrupt.
0	CCRCERRIE	Command response CRC fail interrupt enable Write 1 to this bit to enable the interrupt.

36.7.14. ACK timeout register (SDIO_ACKTO)

Address offset: 0x40

Reset value: 0x0000 0000

When DSM enters the WaitACK state, the SDIO_ACKTO register value will loaded into a counter. It is used to answer whether the acknowledgment timeout occurs. If the counter reaches 0 and the DSM is in this state, the ACK timeout status flag is set to 1.

The data transfer must be written to the SDIO_ACKTO register before being written to the SDIO_DATACTL register.

This register has to be accessed by word(32-bit).

31	30	29	28	27	26	25	24	23	22	21	20	19	18	17	16
Reserved							ACKTO[24:16]								
r							rw								

15	14	13	12	11	10	9	8	7	6	5	4	3	2	1	0
ACKTO[15:0]															
rw															

Bits	Fields	Descriptions
31:25	Reserved	Must be kept at reset value.
24:0	ACKTO[24:0]	Boot ACK timeout period. These bits can only be configured by firmware when CSMEN = 0.

36.7.15. FIFO data register (SDIO_FIFO)

Address offset: 0x80

Reset value: 0x0000 0000

This register occupies 16 entries of 32-bit words, the address offset is from 0x80 to 0xBC.

This register has to be accessed by word(32-bit).

31	30	29	28	27	26	25	24	23	22	21	20	19	18	17	16

FIFODT[31:16]
rw

15	14	13	12	11	10	9	8	7	6	5	4	3	2	1	0
FIFODT[15:0]															
rw															

Bits	Fields	Descriptions
31:0	FIFODT[31:0]	Receive FIFO data or transmit FIFO data These bits are the data of receive FIFO or transmit FIFO. Write to or read from this register is write data to FIFO or read data from FIFO. This register can only be read or written by firmware when CSMEN = 0.

36.7.16. IDMA control register (SDIO_IDMACTL)

Address offset: 0x50

Reset value: 0x0000 0000

The transmit and receive FIFO can be written or read as a 32-bit wide register. The FIFO have 32 consecutive addresses as 32 entries. This allows the CPU to use its store/load multiple operator commands to write/read FIFO.

31	30	29	28	27	26	25	24	23	22	21	20	19	18	17	16
Reserved															

15	14	13	12	11	10	9	8	7	6	5	4	3	2	1	0
Reserved													BUFSEL	BUFMOD	IDMAEN
													rw	rw	rw

Bits	Fields	Descriptions
31:3	Reserved	Must be kept at reset value.
2	BUFSEL	IDMA double buffer selection bit This bit can only be configured by firmware when CMDSTA = 0. When IDMA is enabled, this bit is toggled by hardware. 0: If IDMA is enabled, uses buffer0, and firmware write access to IDMAADDR0 is not allow. 1: If IDMA is enabled, uses buffer1, and firmware write access to IDMAADDR1 is not allow.
1	BUFMOD	Double buffer selection bit This bit can only be configured by firmware when DATSTA = 0. 0: Single buffer mode. 1: Double buffer mode.
0	IDMAEN	FIFO internal DMA enable bit This bit can only be configured by firmware when DATSTA = 0. 0: IDMA disable.

1: IDMA enable.

36.7.17. IDMA buffer size register (SDIO_IDMASIZE)

Address offset: 0x54

Reset value: 0x0000 0000

This register contains the buffers size when in double buffer configuration.

31	30	29	28	27	26	25	24	23	22	21	20	19	18	17	16
Reserved															

15	14	13	12	11	10	9	8	7	6	5	4	3	2	1	0
Reserved			IDMASIZE[7：0]								Reserved				
			rw												

Bits	Fields	Descriptions
31:13	Reserved	Must be kept at reset value.
12:5	IDMASIZE[7：0]	Number of bytes per buffer. IDMA buffer size = IDMASIZE[7：0] * 8 words. 0x00: buffer size = 0 words 0x01: buffer size = 8 words 0x02: buffer size = 16 words …… 0xFF: buffer size = 2040 words
4:0	Reserved	Must be kept at reset value.

36.7.18. IDMA buffer 0 base address register (SDIO_IDMAADDR0)

Address offset: 0x58

Reset value: 0x0000 0000

This register contains the base address of memory buffer in single buffer configuration and the base address of buffer 0 in double buffer configuration.

31	30	29	28	27	26	25	24	23	22	21	20	19	18	17	16
IDMAADDR0[31:16]															
rw															

15	14	13	12	11	10	9	8	7	6	5	4	3	2	1	0
IDMAADDR0[15:0]															
rw															

Bits	Fields	Descriptions
31:0	IDMAADDR0[31:0]	The address is a multiple of 4. The IDMAADDR0[1:0] are always 0 and read only. This register can be written by firmware when CMDSTA = 0, and can dynamically

be written by firmware when CMDSTA and BUFSEL all set to 1 .

36.7.19. IDMA buffer 1 base address register (SDIO_IDMAADDR1)

Address offset: 0x5C

Reset value: 0x0000 0000

This register contains t the base address of buffer 1 in double buffer configuration.

31	30	29	28	27	26	25	24	23	22	21	20	19	18	17	16
IDMAADDR1[31:16]															
rw															

15	14	13	12	11	10	9	8	7	6	5	4	3	2	1	0
IDMAADDR1[15:0]															
rw															

Bits	Fields	Descriptions
31:0	IDMAADDR1[31:0]	The address is a multiple of 4. The IDMAADDR1[1:0] are always 0 and read only. This register can be written by firmware when CMDSTA = 0, and can dynamically be written by firmware when CMDSTA = 1 and BUFSEL = 0.

37. Management data input / output (MDIO)

37.1. Overview

The MDIO interface can receive complete MDIO frames. As long as the data is written to the register before receiving the turnaround bits (TA) of the read or post read increment address frame, the MDIO interface can transmit complete MDIO frames. Interrupts are generated at the end of every complete frame, which can be used or provided at correct time. Interrupts can also be generated after every valid PHYADR and DEVADD, which allows more complex controls within frames.

37.2. Characteristics

- Support slave mode with a frequency up to 4MHz.
- Support CFP / CFP2 MSA Management Interface Specification.
- Support various kinds of interrupts.
- Physical address can be setted:
  - By software;
  - By hardware pin.

37.3. Pins and internal signals

Figure 37-1. CFP Management Interface Architecture shows the MDIO block diagram. *Table 37-1. MDIO pins definition* gives the MDIO internal signals and pins description.

Table 37-1. MDIO pins definition

Name	Signal type
MDIO	Input / Output, Digital signal
MDC	Input, Digital clock signal
PRTADR[4:0]	Input, Digital address signals

37.4. Function overview

Figure 37-1. CFP Management Interface Architecture

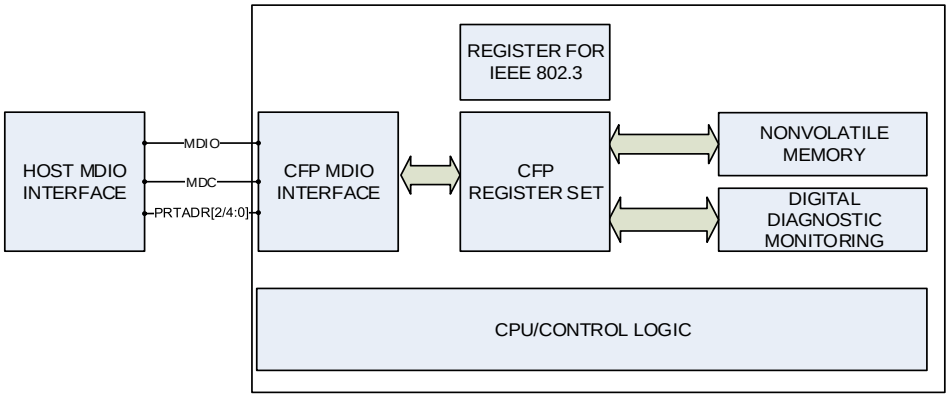

Figure 37-2. MDIO Architecture

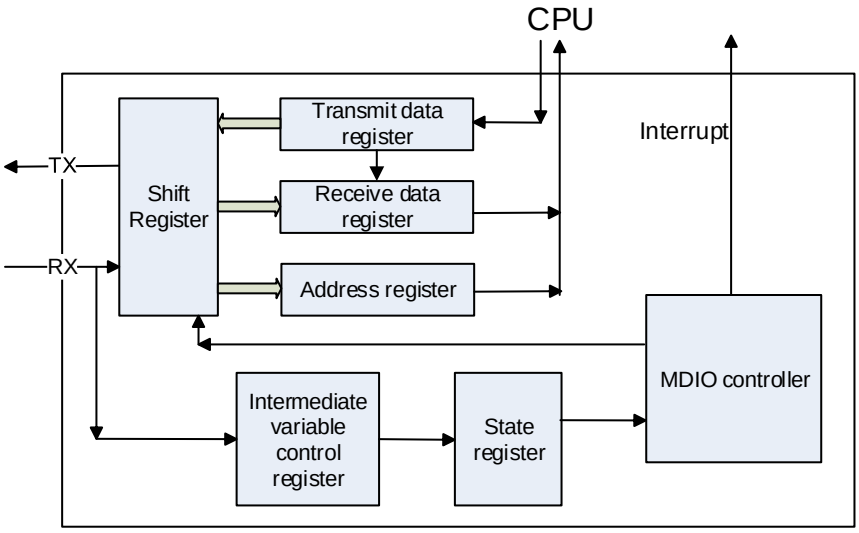

37.4.1. Frame structure

CFP MDIO interface uses the communication data frame structure defined in IEEE 802.3 Clause 45. Each frame can be either an address frame or a data frame. The total bit length of each frame is 64, consisting of 32 bits preamble, and the frame command body.The command body consists of 6 parts illustrated in ***Figure 37-3. MDIO Frame Structure***.

Figure 37-3. MDIO Frame Structure

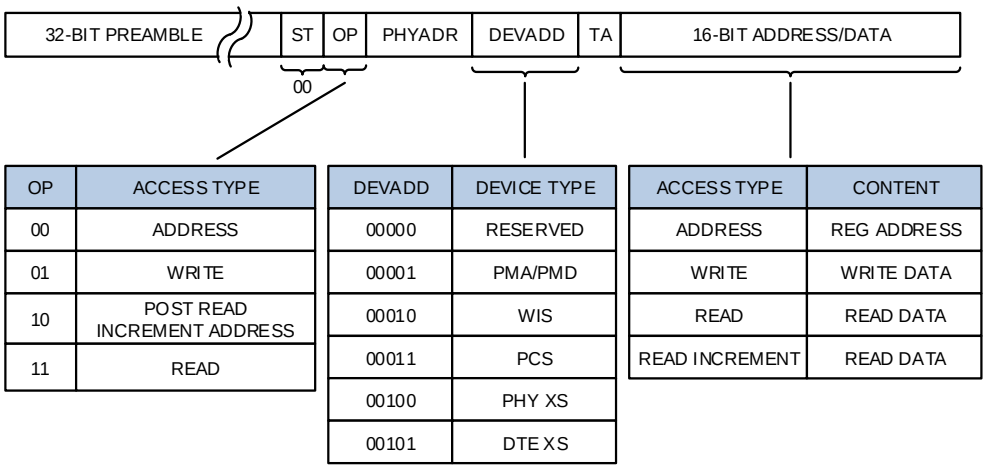

Note:

1. ST = Start bits (2 bits)
2. OP = Operation code (2 bits)
3. PHYADR = Physical port Address (5 bits)
4. DEVADD = MDIO Device Address (or called Device Type, 5 bits)
5. TA = Turnaround bits (2 bits)
6. 16-BIT ADDRESS/DATA is the payload

Table 37-2. Frame Details for Different Frame Types (1)

Frame	Idle	Management Frame Fields							Idle
		PRE	ST	OP	PHYADR	DEVADD	TA	Address/Data	
Write Address	Z	1…1	00	00	aaaaa	aaaaa	10	aaaaaaaaaaaaaaaa	Z
Write Data	Z	1…1	00	01	aaaaa	aaaaa	10	dddddddddddddddd	Z
Read Data	Z	1…1	00	11	aaaaa	aaaaa	z0	dddddddddddddddd	Z
Post Read Increment Address Frame	Z	1…1	00	10	aaaaa	aaaaa	z0	dddddddddddddddd	Z

(1). During the idle condition, the MDIO clock (MDC) and MDIO are not actively driven. For a read or a post read increment address frame, the TA bits is 1.5 bits, and the ahead 0.5 bit cycle of TA is driven by the host, the other one bit cycle of TA and during the 16-bit data time, MDIO is driven by the MDIO manageable device (slave), then another 0.5 bit cycle of TA is followed, MDIO is driven by the host. At all other times, the station management entity (host) drives the MDIO.

Idle Condition (Idle)

The idle condition for the MDIO is a high impedance state.

Preamble (PRE)

At the beginning of each transaction, the station management entity (host) sends a sequence of at least 32 contiguous bits of bit ‘1’ at a time to the MDIO, with 32 corresponding clock cycles on the MDIO clock (MDC), to establish the start of a frame.

Start of Frame (ST)

After PRE, the ST (consisting of two zero bits) indicates the start of the frame information.

Operation Code (OP)

The OP specifies the action to take, as described in *Table 37-3. Operation Code*.

Table 37-3. Operation Code

OP	Descriptions
00	Set the address for a subsequent write or read frame.
01	Write to the previously set address.
11	Read from the previously set address.
10	Read from the previously set address, and then increment the address. User code must increment the address.

Physical Address (PHYADR)

The physical address is five bits, allowing 32 unique addresses. PHYADR is set either by five pins or by the software.

Device Address (DEVADD)

DEVADD is five bits and selects the device type. In the CFP standard, only MDIO Device Address 1 is supported.

Turnaround (TA)

The MDIO changes from the station management entity (host) to MDIO manageable device (slave) during the TA time.

Address / Data

The address / data field is 16 bits.

37.4.2. Typical Usage Sequence

Most of the MDIO interface is implemented in the hardware, requiring correct software operation. The following is the usage flow:

1. Reset the MDIO and configure the GPIO module to make selected PADs to alternate function.
2. Set the frame parameters by writing the MDIO_CTL, MDIO_CFG and MDIO_TO registers as you need.
3. Set the interrupts by writing the MDIO_INTEN register and the required system interrupt settings.
4. For a write frame, the write address and write data frames can be received in the MDIO_RADDR and MDIO_RDATA registers after receiving complete frame. For a read data frame or post read increment address frame, data must be placed in the MDIO_TDATA register in advance of the frame so that the data can be automatically

inserted for the frame.

In this process, no software intervention is required. The frame progress can be monitored with the MDIO_RFRM register when frame field match or unmatch event occur during each frame or at the completion of each frame. Due to bit [9:0] of MDIO_STAT register is automatically cleared, do not use MDIO_STAT register to monitor frame progress, and the MDIO_STAT register can be lost if read at an inappropriate time. Read the MDIO_STAT register only once per frame. To monitor frame progress, read the status in MDIO_STAT register according to interrupts or by polling the related bit 8 (interrupt num 40) in SETPEND1 register (in NVIC registers). MDIO interrupts must have the highest priority of all peripherals, otherwise they are easy to lose.

Notes:

1. The system clock frequency should be more than 3 times that of the MDC clock.
2. Be sure to send data to MDIO_TDATA register before TA.
3. Please configure the software reset before use if timeout or other error occurs.

Figure 37-4. MDIO slave communication process

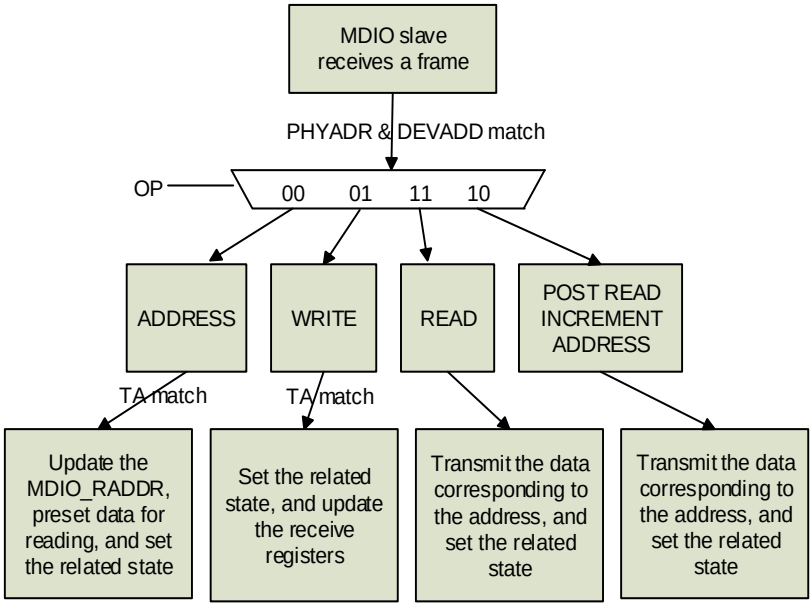

After receiving the address frame sent by the host, no matter whether the next frame is write or read, the data can be preset to the transfer data register in advance, thus if the next frame is read, MDIO will send the preset data. If the address frame is received but no read operation is performed following, the new data can be overwritten to the original transfer data register when the next address frame is accepted.

37.5. Register definition

MDIO base address: 0x4000 D800

37.5.1. Control register (MDIO_CTL)

Address offset: 0x00

Reset value: 0x0000 XXXX

This register has to be accessed by word (32-bit).

31	30	29	28	27	26	25	24	23	22	21	20	19	18	17	16
Reserved															

15	14	13	12	11	10	9	8	7	6	5	4	3	2	1	0
Reserved														PHYB	SWRST
														rw	w

Bits	Fields	Descriptions
31:2	Reserved	Must be kept at reset value.
1	PHYB	MDIO PHY bit length 0: MDIO PHY uses 5 bits 1: MDIO PHY uses 3 bits. Unused PHY bits are ignored
0	SWRST	Write 1 to reset MDIO block. Registers will not be reset. Hardware immediately clears this bit.

37.5.2. Received frame information register (MDIO_RFRM)

Address offset: 0x04

Reset value: 0x0000 0000

This register has to be accessed by word (32-bit).

31	30	29	28	27	26	25	24	23	22	21	20	19	18	17	16
Reserved															

15	14	13	12	11	10	9	8	7	6	5	4	3	2	1	0
Reserved		RTA[1:0]		RDEV[4:0]					RPHY[4:0]					ROP[1:0]	
		r		r					r					r	

Bits	Fields	Descriptions
31:14	Reserved	Must be kept at reset value.
13:12	RTA[1:0]	Received frame field TA (only accept TA bits of a write data frame or a write address

		frame)
11:7	RDEV[4:0]	Received frame field DEVADD
6:2	RPHY[4:0]	Received frame field PHYADR
1:0	ROP[1:0]	Received frame field OP 00: write address frame 01: write data frame 10: post read increment address frame 11: read data frame

37.5.3. Received data register (MDIO_RDATA)

Address offset: 0x08

Reset value: 0x0000 0000

This register has to be accessed by word (32-bit).

31	30	29	28	27	26	25	24	23	22	21	20	19	18	17	16
Reserved															

15	14	13	12	11	10	9	8	7	6	5	4	3	2	1	0
RDATA[15:0]															
r															

Bits	Fields	Descriptions
31:16	Reserved	Must be kept at reset value.
15:0	RDATA[15:0]	Received frame field DATA

37.5.4. Received address register (MDIO_RADDR)

Address offset: 0x0C

Reset value: 0x0000 0000

This register has to be accessed by word (32-bit).

31	30	29	28	27	26	25	24	23	22	21	20	19	18	17	16
Reserved															

15	14	13	12	11	10	9	8	7	6	5	4	3	2	1	0
RADDR[15:0]															
r															

Bits	Fields	Descriptions
31:16	Reserved	Must be kept at reset value.
15:0	RADDR[15:0]	Received frame field ADDRESS

37.5.5. Transfer data register (MDIO_TDATA)

Address offset: 0x10

Reset value: 0x0000 0000

This register has to be accessed by word (32-bit).

31	30	29	28	27	26	25	24	23	22	21	20	19	18	17	16
Reserved															

15	14	13	12	11	10	9	8	7	6	5	4	3	2	1	0
TDATA[15:0]															
rw															

Bits	Fields	Descriptions
31:16	Reserved	Must be kept at reset value.
15:0	TDATA[15:0]	Data that is transmitted by the next read or post read increment address frame. Before a read data frame, the master sends a write address frame to specify which data is to be read. After this write address frame, the user software must place this requested data into MDIO_TDATA before it is required by the read frame. The time available is at latest 3 MDIO clock cycles before TA.

37.5.6. Configuration register (MDIO_CFG)

Address offset: 0x14

Reset value: 0x0000 0000

This register has to be accessed by word (32-bit).

31	30	29	28	27	26	25	24	23	22	21	20	19	18	17	16
Reserved															

15	14	13	12	11	10	9	8	7	6	5	4	3	2	1	0
Reserved	EDEVADD[4:0]					EPHYSEL[4:0]					PHYSW[4:0]				
	rw					rw					rw				

Bits	Fields	Descriptions
31:15	Reserved	Must be kept at reset value.
14:10	EDEVADD[4:0]	Expected DEVADD. Normally 01.
9:5	EPHYSEL[4:0]	Selects expected PHYADR. For each bit x in the 5-bit EPHYSEL: 0: sets expected PHYADR.x = PHYPIN[4:0].x 1: sets expected PHYADR.x = PHYSW[4:0].x
4:0	PHYSW[4:0]	Software provided PHYADR. Chosen according to corresponding EPHYSEL[4:0] bits.

37.5.7. Status register (MDIO_STAT)

Address offset: 0x18

Reset value: 0x0000 1000

This register has to be accessed by word (32-bit).

31	30	29	28	27	26	25	24	23	22	21	20	19	18	17	16
Reserved															

15	14	13	12	11	10	9	8	7	6	5	4	3	2	1	0
Reserved		RBNE	Reserved	OVR	UDR	TO	TANM	PHYNM	PHYM	DEVNM	DEVM	RDFRM	RDINCFRM	ADDRFRM	WRFRM
		r		r	r	rc	rc	rc	rc	rc	rc	rc	rc	rc	rc

Bits	Fields	Descriptions
31:14	Reserved	Must be kept at reset value.
13	RBNE	Read data buffer not empty flag. Data is received and ready to be read. Cleared by reading the MDIO_RDATA register.
12	Reserved	Must be kept at reset value.
11	OVR	Receive overrun flag. Set by hardware when the data in the receive shift register is ready to be transferred into the MDIO_RDATA register while the RBNE bit is set. Cleared by reading the MDIO_RDATA register.
10	UDR	Transmit underrun flag. Set by hardware if the data has not been written to MDIO_TDATA register 3 MDIO clock cycles before TA of a read / post read increment address frame when the MDIO_TDATA is empty. Cleared by a write to the MDIO_TDATA register.
9	TO	Timeout flag. If a new bit of a frame is not received or a bit of the prepared data is not transmitted before reaching the configured timeout value, this bit will be set by hardware. Cleared by reading the MDIO_STAT register.
8	TANM	Set at end bit of TA of a write data frame or a write address frame if the received TA nonmatches expected ‘10’. Cleared by reading the MDIO_STAT register.
7	PHYNM	Set at end bit of PHYADR if PHYADR nonmatches. Cleared by reading the MDIO_STAT register.
6	PHYM	Set at end bit of PHYADR if PHYADR matches. Cleared by reading the MDIO_STAT register.
5	DEVNM	Set at end bit of DEVADD if DEVADD nonmatches. Cleared by reading the MDIO_STAT register.
4	DEVM	Set at end bit of DEVADD if DEVADD matches. Cleared by reading the MDIO_STAT

		register.
3	RDFRM	Set at end bit (after frame field DATA transmission) of a read data frame if DEVADD and PHYADR both match. Cleared by reading the MDIO_STAT register.
2	RDINCFRM	Set at end bit (after frame field DATA transmission) of a post read increment address frame if DEVADD and PHYADR both match. Cleared by reading MDIO_STAT register.
1	ADDRFRM	Set at end bit of a write address frame if DEVADD and PHYADR both match. Cleared by reading the MDIO_STAT register.
0	WRFRM	Set at end bit of a write data frame if DEVADD and PHYADR both match. Cleared by reading the MDIO_STAT register.

37.5.8. Interrupt enable register (MDIO_INTEN)

Address offset: 0x1C

Reset value: 0x0000 0000

This register has to be accessed by word (32-bit).

31	30	29	28	27	26	25	24	23	22	21	120	19	18	17	16
Reserved															

15	14	13	12	11	10	9	8	7	6	5	4	3	2	1	0
Reserved		RBNEIE	Reserved	OVRIE	UDRIE	TOIE	TANMIE	PHYNMIE	PHYMIE	DEVNMIE	DEVMIE	RDFRMIE	RDINCFRMIE	ADDRFRMIE	WRFRMIE
		rw		rw	rw	rw	rw	rw	rw	rw	rw	rw	rw	rw	rw

Bits	Fields	Descriptions
31:14	Reserved	Must be kept at reset value.
13	RBNEIE	If set, interrupt is requested when RBDE bit in MDIO_STAT register becomes active.
12	Reserved	Must be kept at reset value.
11	OVRIE	If set, interrupt is requested when OVR bit in MDIO_STAT register becomes active.
10	UDRIE	If set, interrupt is requested when UDR bit in MDIO_STAT register becomes active.
9	TOIE	If set, interrupt is requested when TO bit in MDIO_STAT register becomes active.
8	TANMIE	If set, interrupt is requested when TANM bit in MDIO_STAT register becomes active.
7	PHYNMIE	If set, interrupt is requested when PHYNM bit in MDIO_STAT register becomes active.
6	PHYMIE	If set, interrupt is requested when PHYM bit in MDIO_STAT register becomes

		active.
5	DEVNMIE	If set, interrupt is requested when DEVNM bit in MDIO_STAT register becomes active.
4	DEVMIE	If set, interrupt is requested when DEVM bit in MDIO_STAT register becomes active.
3	RDFRMIE	If set, interrupt is requested when RDFRM bit in MDIO_STAT register becomes active.
2	RDINCFRMIE	If set, interrupt is requested when RDINCFRM bit in MDIO_STAT register becomes active.
1	ADDRFRMIE	If set, interrupt is requested when ADDRFRM bit in MDIO_STAT register becomes active.
0	WRFRMIE	If set, interrupt is requested when WRFRM bit in MDIO_STAT register becomes active.

37.5.9. Pin value register (MDIO_PIN)

Address offset: 0x20

Reset value: 0x0000 0000

This register has to be accessed by word (32-bit).

31	30	29	28	27	26	25	24	23	22	21	120	19	18	17	16
Reserved															

15	14	13	12	11	10	9	8	7	6	5	4	3	2	1	0
Reserved											PHYPIN[4:0]				
													r		

Bits	Fields	Descriptions
31:5	Reserved	Must be kept at reset value.
4:0	PHYPIN[4:0]	Pin value read from hardware PRTADR[4:0] pins

37.5.10. Timeout register (MDIO_TO)

Address offset: 0x24

Reset value: 0x0000 0000

This register has to be accessed by word (32-bit).

31	30	29	28	27	26	25	24	23	22	21	120	19	18	17	16
Reserved															TOCNT[15]

															rw
15	14	13	12	11	10	9	8	7	6	5	4	3	2	1	0
TOCNT[14:0]															TOEN
							rw								rw

Bits	Fields	Descriptions
31:17	Reserved	Must be kept at reset value.
16:1	TOCNT[15:0]	MDIO time out = TOCNT[15:0]*PCLK1
0	TOEN	Timeout enable 0: Timeout is disabled 1: Timeout is enabled

38. External memory controller (EXMC)

38.1. Overview

The external memory controller EXMC, is used as a translator for CPU to access a variety of external memory, it automatically converts AXI memory access protocol into a specific memory access protocol defined in the configuration register, such as SRAM, ROM, NOR Flash, PSRAM, NAND Flash and SDRAM. Users could also tweak with the timing parameters in the configuration register to boost up memory access efficiency. EXMC access space is divided into multiple banks; each bank is assigned to access a specific memory type with flexible parameter configuration as defined in the controlling register.

38.2. Characteristics

- Supported external memory:
  - SRAM
  - PSRAM
  - ROM
  - NOR Flash
  - 8-bit or 16-bit NAND Flash
  - Synchronous DRAM(SDRAM)
- Protocol translation between the AXI and the multitude of external memory protocol.
- Offering a variety of programmable timing parameters to meet user's specific needs.
- Each bank has its own chip-select signal which can be configured independently.
- Independent read / write timing configuration to a sub-set memory type.
- Embedded ECC hardware for NAND Flash access.
- 8,16, or 32 bits bus width.
- Address and data bus multiplexing mechanism for NOR Flash and PSRAM.
- Write enable and byte select are provided as needed.
- Automatic AXI transaction split when internal and external bus width is not compatible.

38.3. Function overview

38.3.1. Block diagram

EXMC is the combination of 7 modules: The AHB bus interface, AXI bus interface, EXMC configuration registers, NOR/PSRAM controller, NAND controller, SDRAM controller and external device interface. AHB clock (HCLK) is the reference clock, which is used to configure the EXMC registers.

Figure 38-1. The EXMC block diagram

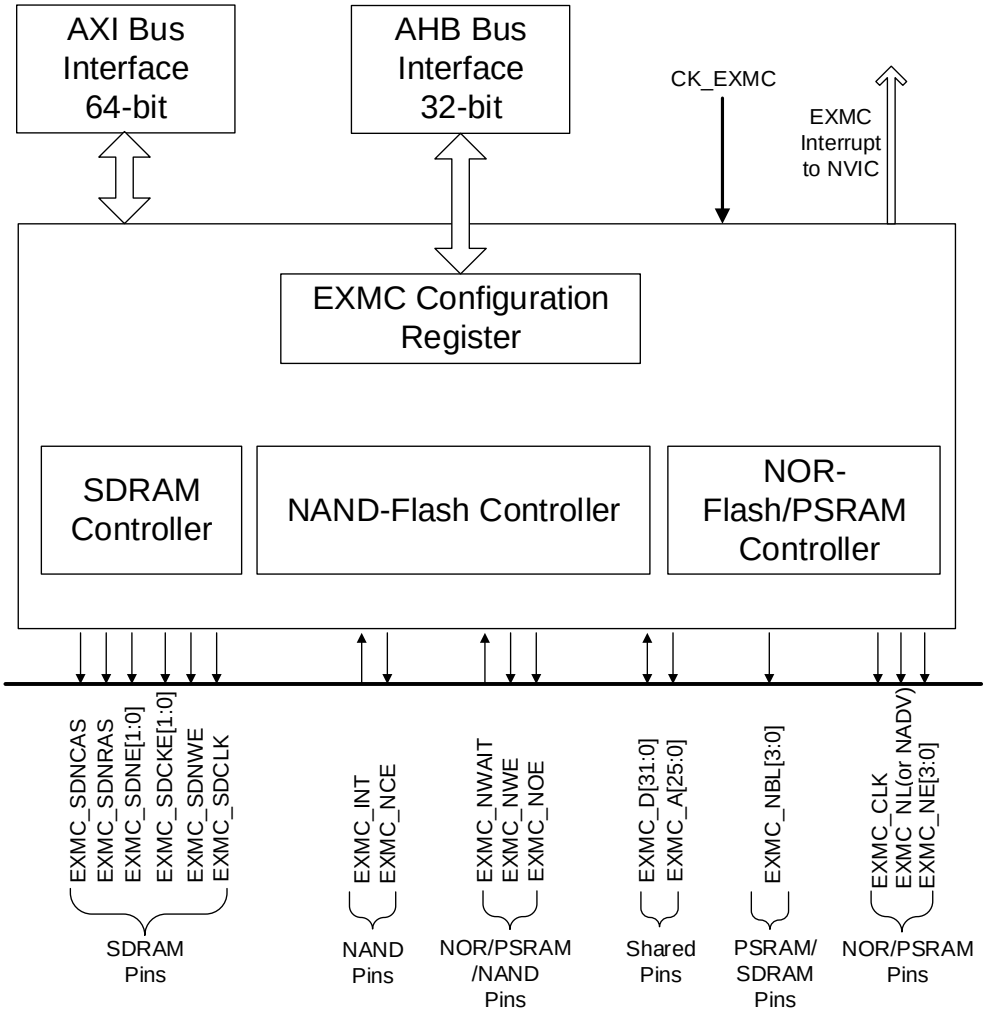

38.3.2. Bus interface

AHB bus interface: The CPU configures the EXMC register through the AHB slave interface.

AXI bus interface: CPU and AXI bus master device access external memory through AXI bus slave interface.

The clock of NOR, NAND, SDRAM controller is the asynchronous CK_EXMC (refer to EXMCSEL bits in ***Clock configuration register 4 (RCU_CFG4)***).

38.3.3. AXI error

Accessing EXMC bank region x (x = 0,.., 3) which is not enabled will generate AXI slave error.

If NREN bit in EXMC_SNCTLx (x = 0,.., 3) register is set to 0, accessing EXMC NOR Flash memory area will generate AXI slave error.

For the write operation of SDRAM device (WPEN is set to 1) that has been write protected, will generate AXI slave error.

38.3.4. Basic regulation of EXMC access

EXMC is the conversion interface between AXI bus and external device protocol. Since the bit width of the AXI data bus is 64 bits, AXI transactions will split an access into several consecutive 8-bit, 16-bit or 32-bit accesses according to the size of the data. In the process of data transfer, AXI transaction data width and memory data width may not be the same. In order to ensure consistency of data transmission, EXMC's read / write accesses follow the following basic regulation.

- When the width of AXI transaction data width equals to the memory bus width, no conversion is applied.
- When the width of AXI transaction data width is greater than memory bus width, the AXI accesses will automatically split into several continuous memory accesses.
- When the width of AXI transaction data width is smaller than memory bus width, if the external memory devices have the byte selection function, such as SRAM, ROM. PSRAM, SDRAM, the application can access the corresponding byte through their byte lane EXMC_NBL[3:0]. Otherwise, write operation is prohibited, but read operation is allowed unconditionally. (See ***Table 38-17. Bank2 of EXMC support the memory and access mode***)

38.3.5. External device address mapping

Figure 38-2. EXMC memory banks

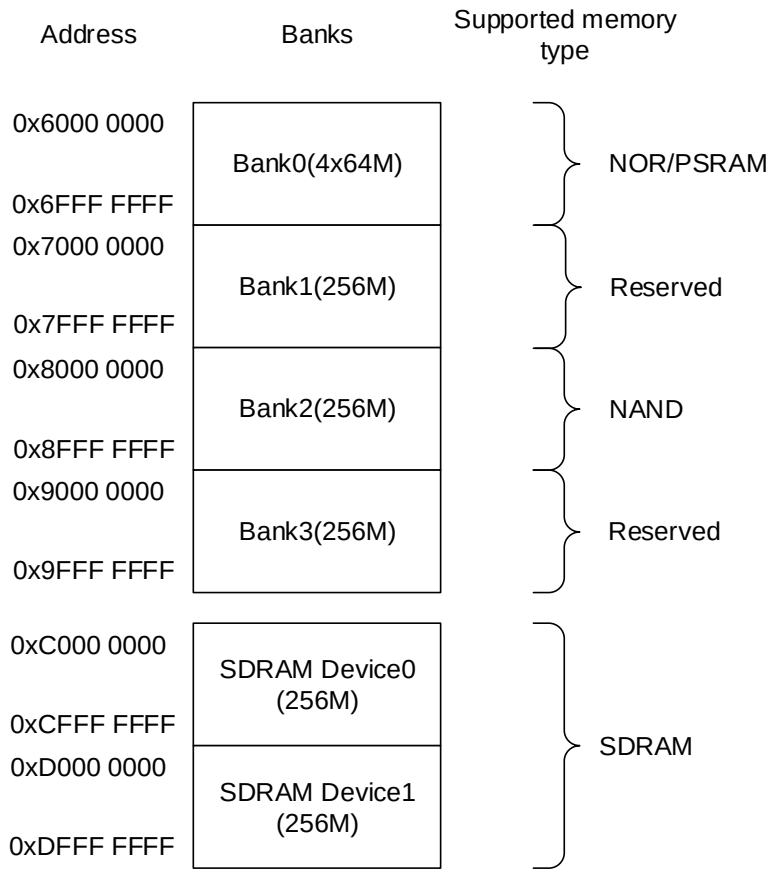

EXMC access space is divided into multiple banks. Each bank is 256 Mbytes. The first bank (Bank0) is further divided into four regions, and each region is 64 Mbytes. Bank2 is each divided into two spaces, the attribute memory space and the common memory space.

Each bank or region has a separate chip-select control signal, which can be configured independently.

Bank0 is used for NOR and PSRAM device access.

Bank2 are used to access NAND Flash exclusively.

SDRAM Device0 and Device1 are used for Synchronous DRAM (SDRAM) access.

The EXMC bank mapping can be modified through the BKREMAP[1:0] bis in the EXMC_SNCTL register. The EXMC bank mapping is shown in ***Table 38-1. EXMC bank mapping***.

Table 38-1. EXMC bank mapping

Address	BKREMAP[1:0]=00	BKREMAP[1:0]=01
0x6000 0000 – 0x6FFF FFFF	NOR/PSRAM bank	SDRAM Device 0

Address	BKREMAP[1:0]=00	BKREMAP[1:0]=01
0x7000 0000 – 0x7FFF FFFF	Reserved	
0x8000 0000 – 0x8FFF FFFF	NAND bank	
0x9000 0000 – 0x9FFF FFFF	Reserved	
0xC000 0000 – 0xCFFF FFFF	SDRAM Device 0	NOR/PSRAM bank
0xD000 0000 – 0xDFFF FFFF	SDRAM Device 1	

NOR/PSRAM address mapping

Figure 38-3. Four regions of bank0 address mapping reflects the address mapping of the four regions of bank0. Internal address lines HADDR[27:26] bit are used to select the four regions.

Figure 38-3. Four regions of bank0 address mapping

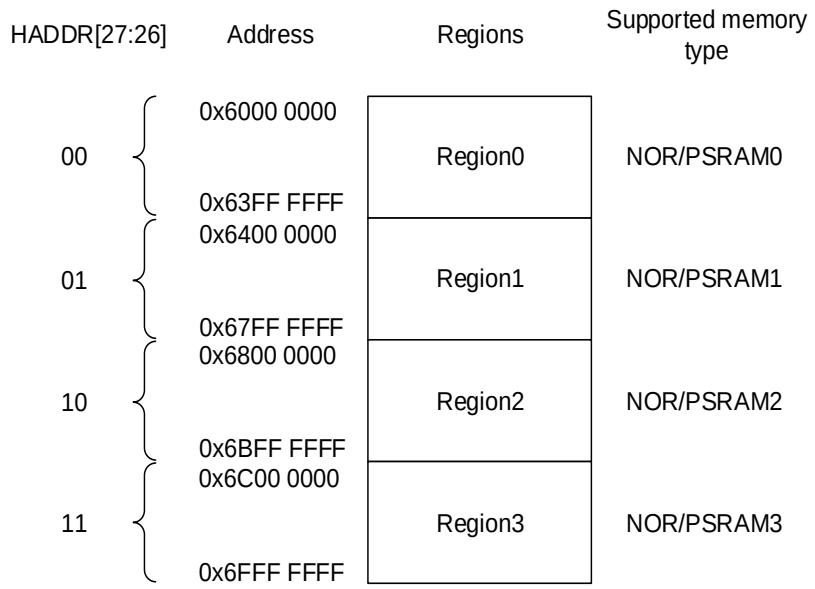

HADDR[25:0] is the byte address whereas the external memory may not be byte accessed, this will lead to address inconsistency. EXMC can adjust HADDR to accommodate the data width of the external memory according to the following rules.

- When data bus width of the external memory is 8-bits. In this case the memory address is byte aligned. HADDR[25:0] is connected to EXMC_A[25:0] and then the EXMC_A[25:0] is connected to the external memory address lines.
- When data bus width of the external memory is 16-bits. In this case the memory address is half-word aligned. HADDR byte address must be converted into half-word aligned by connecting HADDR[25:1] with EXMC_A[24:0]. The EXMC_A[24:0] is connected to the external memory address lines.
- When data bus width of the external memory is 32-bits. In this case the memory address is word aligned. HADDR byte address must be converted into word aligned by

connecting HADDR[25:2] with EXMC_A[23:0]. The EXMC_A[23:0] is connected to the external memory address lines.

NAND address mapping

Bank2 is designed to access NAND Flash, bank1 and bank3 are reserved. Each bank is further divided into several memory spaces as shown in ***Figure 38-4. NAND address mapping***.

Figure 38-4. NAND address mapping

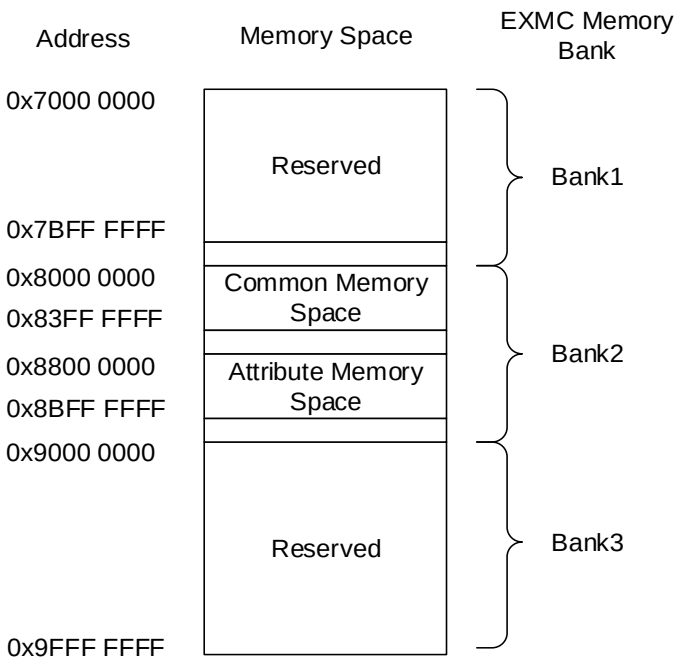

For NAND Flash, the common space and the attribute space are further-divided into three areas individually, the data area, the command area and the address area as shown in ***Figure 38-5. Diagram of bank2 common space***.

Figure 38-5. Diagram of bank2 common space

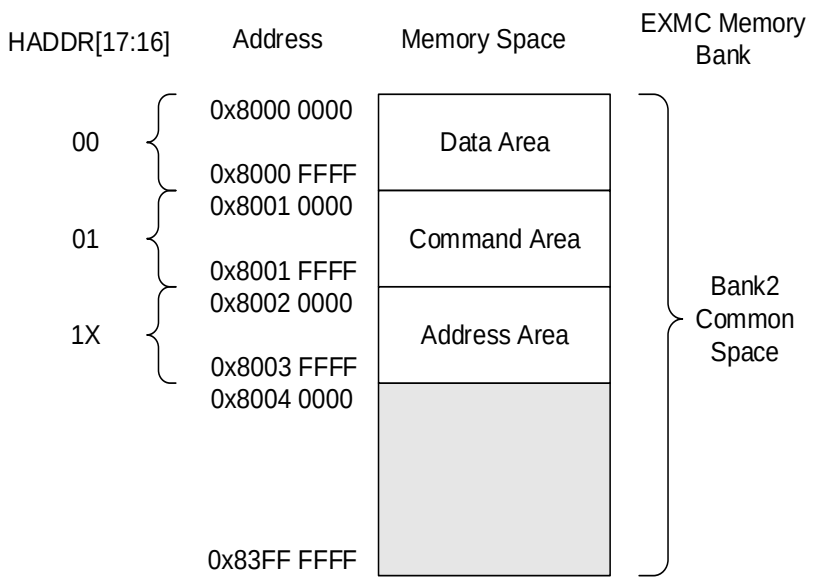

HADDR[17:16] bits are used to select one of the three areas.

- When HADDR[17:16] = 00, the data area is selected.
- When HADDR[17:16] = 01, the command area is selected.
- When HADDR[17:16] = 1X, the address area is selected.

Application software uses these three areas to access NAND Flash, their definitions are as follows.

- Address area: This area is where the NAND Flash access address should be issued by software, the EXMC will pull the address latch enable (ALE) signal automatically in address transfer phase. ALE is mapped to EXMC_A[17].
- Command area: This area is where the NAND Flash access command should be issued by the software, the EXMC will pull the command latch enable (CLE) signal automatically in command transfer phase. CLE is mapped to EXMC_A[16].
- Data area: This area is where the NAND Flash read / write data should be accessed. When the EXMC is in data transfer mode, software should write the data to be transferred to the NAND Flash in this area. When the EXMC is in data reception mode, software should read the data from the NAND Flash by reading this area. Data access address is incremented automatically in consecutive mode, users do not need to be concerned with access address.

SDRAM address mapping

The HADDR[28] bit is used to choose one of the two memory banks as shown in ***Figure 38-6. SDRAM address mapping***.

Figure 38-6. SDRAM address mapping

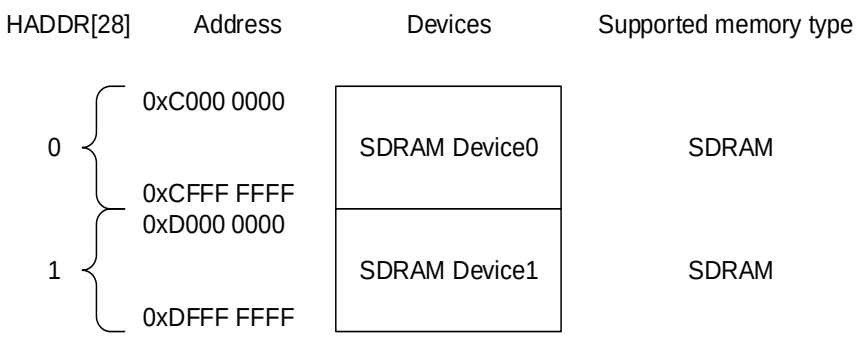

The ***Table 38-2. SDRAM mapping*** shows SDRAM address mapping of a 13-bit row and an 11-bit column configuration.

Table 38-2. SDRAM mapping

Memory width	Internal bank	Row address	Column address	Maximum memory capacity
8-bit	HADDR[25:24]	HADDR[23:11]	HADDR[10:0]	64 Mbytes: 4 x 8K x 2K
16-bit	HADDR[26:25]	HADDR[24:12]	HADDR[11:1]	128 Mbytes: 4 x 8K x 2K x 2
32-bit	HADDR[27:26]	HADDR[25:13]	HADDR[12:2]	256 Mbytes: 4 x 8K x 2K x 4

38.3.6. NOR/PSRAM controller

NOR/PSRAM memory controller controls bank0, which is designed to support NOR Flash, PSRAM, SRAM, ROM and honeycomb RAM external memory. EXMC has 4 independent chip-select signals for each of the 4 sub-banks within bank0, named NE[x] (x = 0, 1, 2, 3). Other signals for NOR/PSRAM access are shared. Each sub-bank has its own set of configuration register, and owns its corresponding unique register.

Note:

In asynchronous mode, all output signals of controller will change on the rise edge of internal CK_EXMC.

In synchronous mode, all output data of controller will change on the fall edge of extern memory device clock (EXMC_CLK).

NOR/PSRAM memory device interface description

Table 38-3. NOR flash interface signals description

EXMC Pin	Direction	Mode	Functional description
EXMC_CLK	Output	Sync	Clock signal for sync

EXMC Pin	Direction	Mode	Functional description
Non-muxed EXMC_A[25:0]	Output	Async/Sync	Address bus signal
Muxed EXMC_A[25:16]			
EXMC_D[15:0]	Input/output	Async/Sync (muxed)	Address/Data bus
	Input/output	Async/Sync (non-muxed)	Data bus
EXMC_NE[x]	Output	Async/Sync	Chip selection, x=0/1/2/3
EXMC_NOE	Output	Async/Sync	Read enable
EXMC_NWE	Output	Async/Sync	Write enable
EXMC_NWAIT	Input	Async/Sync	Wait input signal
EXMC_NL(NADV)	Output	Async/Sync	Address valid

Table 38-4. PSRAM non-muxed signal description

EXMC Pin	Direction	Mode	Functional description
EXMC_CLK	Output	Sync	Clock signal for sync
EXMC_A[25:0]	Output	Async/Sync	Address Bus
EXMC_D[15:0]	Input/output	Async/Sync	Data Bus
EXMC_NE[x]	Output	Async/Sync	Chip selection, x=0/1/2/3
EXMC_NOE	Output	Async/Sync	Read enable
EXMC_NWE	Output	Async/Sync	Write enable
EXMC_NWAIT	Input	Async/Sync	Wait input signal
EXMC_NL(NADV)	Output	Async/Sync	Latch enable (address valid enable, NADV)
EXMC_NBL[1]	Output	Async/Sync	Upper byte enable
EXMC_NBL[0]	Output	Async/Sync	Lower byte enable

Supported memory access mode

Table 38-5. EXMC bank 0 supports all transactions shows an example of the supported devices type, access modes and transactions when the memory data bus is 16-bit for NOR, PSRAM and SRAM.

Table 38-5. EXMC bank 0 supports all transactions

Memory	Access Mode	R/W	AXI Transaction Size	Memory Transaction Size	Comments
NOR Flash	Async	R	8	16	
	Async	W	8	16	Not allowed
	Async	R	16	16	
	Async	W	16	16	

Memory	Access Mode	R/W	AXI Transaction Size	Memory Transaction Size	Comments
	Async	R	32	16	Split into 2 EXMC accesses
	Async	W	32	16	Split into 2 EXMC accesses
	Async	R	64	16	Split into 4 EXMC accesses
	Async	W	64	16	Split into 4 EXMC accesses
	Sync	R	8	16	Not allowed
	Sync	R	16	16	
	Sync	R	32	16	
	Sync	R	64	16	
PSRAM	Async	R	8	16	
	Async	W	8	16	Use of byte lanes EXMC_NBL[1:0]
	Async	R	16	16	
	Async	W	16	16	
	Async	R	32	16	Split into 2 EXMC accesses
	Async	W	32	16	Split into 2 EXMC accesses
	Async	R	64	16	Split into 4 EXMC accesses
	Async	W	64	16	Split into 4 EXMC accesses
	Sync	R	8	16	Not allowed
	Sync	R	16	16	
	Sync	R	32	16	
	Sync	R	64	16	
	Sync	W	8	16	Use of byte lanes EXMC_NBL[1:0]
	Sync	W	16	16	
	Sync	W	32	16	
	Sync	W	64	16	
SRAM and ROM	Async	R	8	16	
	Async	R	16	16	
	Async	R	32	16	Split into 2 EXMC accesses
	Async	R	64	16	Split into 4 EXMC accesses

Memory	Access Mode	R/W	AXI Transaction Size	Memory Transaction Size	Comments
	Async	W	8	16	Use of byte lanes EXMC_NBL[1:0]
	Async	W	16	16	
	Async	W	32	16	Use of byte lanes EXMC_NBL[1:0]
	Async	W	64	16	Use of byte lanes EXMC_NBL[1:0]

NOR Flash/PSRAM controller timing

EXMC provides various programmable timing parameters and timing models for SRAM, ROM, PSRAM, NOR Flash and other external static memory.

Table 38-6. NOR / PSRAM controller timing parameters

Parameter	Function	Access mode	Unit	Min	Max
CKDIV	Sync Clock divide ratio	Sync	CK_EXMC	2	16
DLAT	Data latency	Sync	EXMC_CLK	2	17
BUSLAT	Bus latency	Async/Sync read	CK_EXMC	0	15
DSET	Data setup time	Async	CK_EXMC	1	255
AHLD	Address hold time	Async(muxed)	CK_EXMC	1	15
ASET	Address setup time	Async	CK_EXMC	0	15

Table 38-7. EXMC timing models

Timing model		Extend mode	Mode description	Write timing parameter	Read timing parameter
Async	Mode 1	0	SRAM/PSRAM/CRAM	DSET ASET	DSET ASET
	Mode 2	0	NOR Flash	DSET ASET	DSET ASET
	Mode A	1	SRAM/PSRAM/CRAM with EXMC_OE toggling on data phase	WDSET WASET	DSET ASET
	Mode B	1	NOR Flash	WDSET WASET	DSET ASET
	Mode C	1	NOR Flash with EXMC_OE toggling on data phase	WDSET WASET	DSET ASET
	Mode D	1	With address hold capability	WDSET WAHLD WASET	DSET AHLD ASET
	Mode AM	0	NOR Flash address/data mux	DSET AHLD	DSET AHLD

Timing model		Extend mode	Mode description	Write timing parameter	Read timing parameter
				ASET BUSLAT	ASET BUSLAT
Sync	Mode E	0	NOR/PSRAM/CRAM synchronous read PSRAM/CRAM synchronous write	DLAT CKDIV	DLAT CKDIV
	Mode SM	0	NOR Flash address/data mux	DLAT CKDIV	DLAT CKDIV

As shown in ***Table 38-7. EXMC timing models***, EXMC NOR Flash / PSRAM controller provides a variety of timing model, users can modify those parameters listed in ***Table 38-6. NOR / PSRAM controller timing parameters*** to satisfy different external memory type and user's requirements. When extended mode is enabled via the EXMODEN bit in EXMC_SNCTLx register, different timing patterns for read and write access could be generated independently according to EXMC_SNTCFGx and EXMC_SNWTCFGx register's configuration.

EXMC_CLK can be configured through the consecutive clock (CCK) bit. If CCK is set to 0, when NOR flash synchronous access is performed, EXMC_CLK will be generated. If CCK is set to 1, EXMC_CLK will be generated unconditionally whether the NOR flash is accessed in synchronous or asynchronous mode.

Asynchronous access timing diagram

Mode 1 - SRAM/CRAM

Figure 38-7. Mode 1 read access

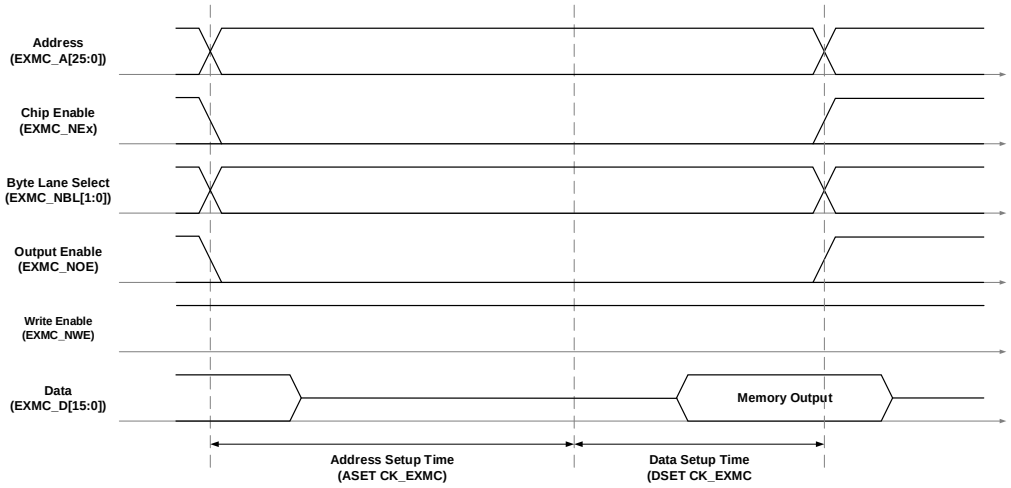

Figure 38-8. Mode 1 write access

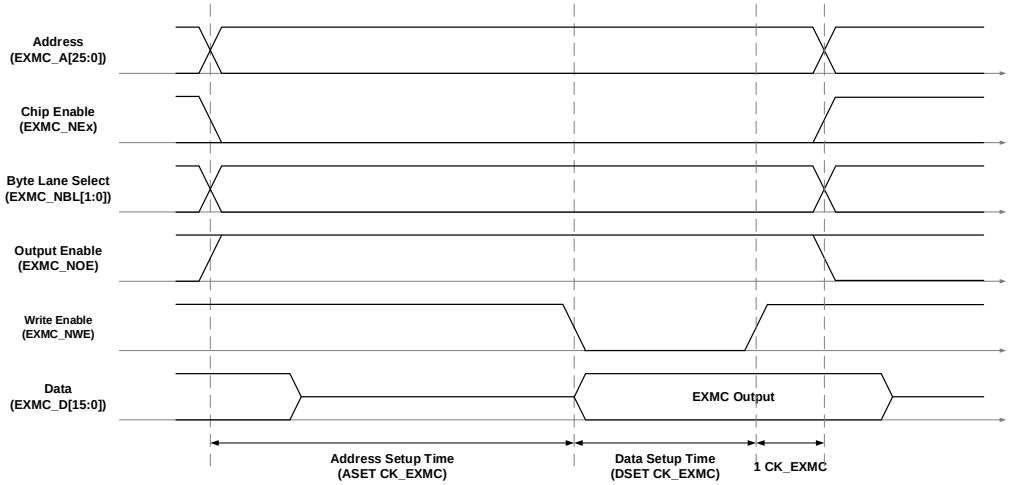

Table 38-8. Mode 1 related registers configuration

Bit Position	Bit Name	Reference Setting Value
EXMC_SNCTLx		
31-21	Reserved	0x000
20	CCK	Depends on memory and user
19	SYNCWR	0x0
18-16	CPS	0x0
15	ASYNCWTEN	Depends on memory
14	EXMODEN	0x0
13	NRWTEN	0x0
12	WEN	Depends on user
11	NRWTCFG	No effect
10	Reserved	0x0
9	NRWTPOL	Meaningful only when the bit 15 is set to 1
8	SBRSTEN	0x0
7	Reserved	0x1
6	NREN	No effect
5-4	NRW	Depends on memory
3-2	NRTP	Depends on memory, except 2(Nor Flash)
1	NRMUX	0x0
0	NRBKEN	0x1
EXMC_SNTCFGx		
31-30	Reserved	0x0000
29-28	ASYNCMOD	No effect
27-24	DLAT	No effect
23-20	CKDIV	No effect
19-16	BUSLAT	Time between EXMC_NE[x] rising edge to EXMC_NE[x] falling edge
15-8	DSET	Depends on memory and user (DSET+1

Bit Position	Bit Name	Reference Setting Value
EXMC_SNCTLx		
		CK_EXMC for write, DSET CK_EXMC for read)
7-4	AHLD	No effect
3-0	ASET	Depends on memory and user

Mode A - SRAM/PSRAM(CRAM) OE toggling

Figure 38-9. Mode A read access

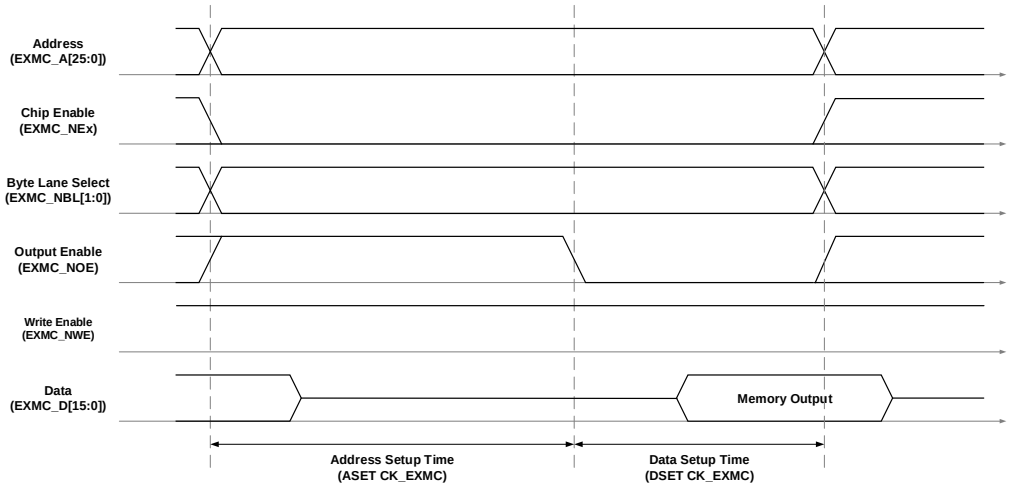

Figure 38-10. Mode A write access

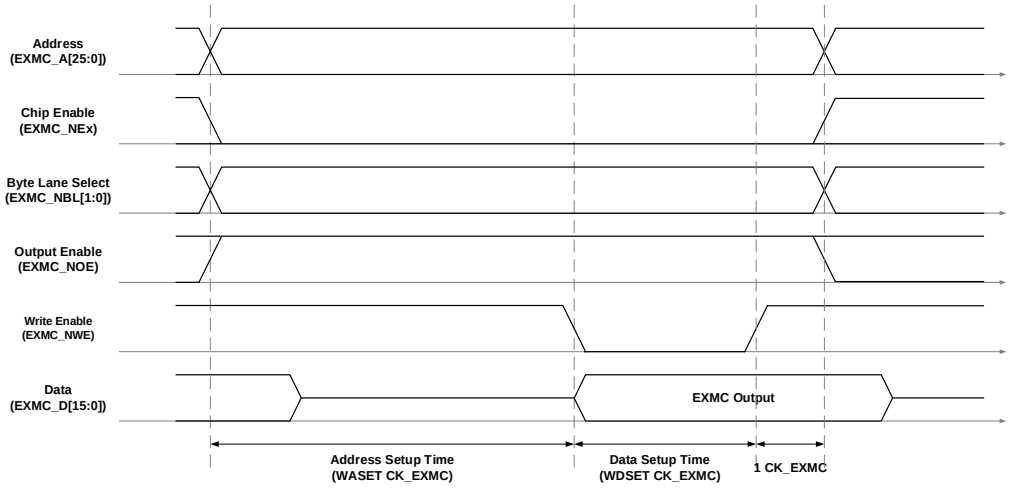

The difference between mode A and mode 1 write timing is that read / write timing is specified by the same set of timing configuration, while mode A write timing configuration is independent of its read configuration.

Table 38-9. Mode A related registers configuration

Bit Position	Bit Name	Reference Setting Value
EXMC_SNCTLx		
31-21	Reserved	0x000
20	CCK	Depends on memory and user
19	SYNCWR	0x0

Bit Position	Bit Name	Reference Setting Value
EXMC_SNCTLx		
18-16	CPS	0x0
15	ASYNCWTEN	Depends on memory
14	EXMODEN	0x1
13	NRWTEN	0x0
12	WEN	Depends on user
11	NRWTCFG	No effect
10	Reserved	0x0
9	NRWTPOL	Meaningful only when the bit 15 is set to 1
8	SBRSTEN	0x0
7	Reserved	0x1
6	NREN	No effect
5-4	NRW	Depends on memory
3-2	NRTP	Depends on memory, except 2(Nor Flash)
1	NRMUX	0x0
0	NRBKEN	0x1
EXMC_SNTCFGx(Read)		
31-30	Reserved	0x0
29-28	ASYNCMOD	0x0
27-24	DLAT	No effect
23-20	CKDIV	No effect
19-16	BUSLAT	Time between EXMC_NE[x] rising edge to EXMC_NE[x] falling edge
15-8	DSET	Depends on memory and user (DSET+1 CK_EXMC for write, DSET CK_EXMC for read)
7-4	AHLD	No effect
3-0	ASET	Depends on memory and user
EXMC_SNWTCFGx(Write)		
31-30	Reserved	0x0
29-28	WASYNCMOD	0x0
27-20	Reserved	0x00
19-16	WBUSLAT	Time between EXMC_NE[x] rising edge to EXMC_NE[x] falling edge
15-8	WDSET	Depends on memory and user
7-4	WAHLD	0x0
3-0	WASET	Depends on memory and user

Mode 2/B - NOR Flash

Figure 38-11. Mode 2/B read access

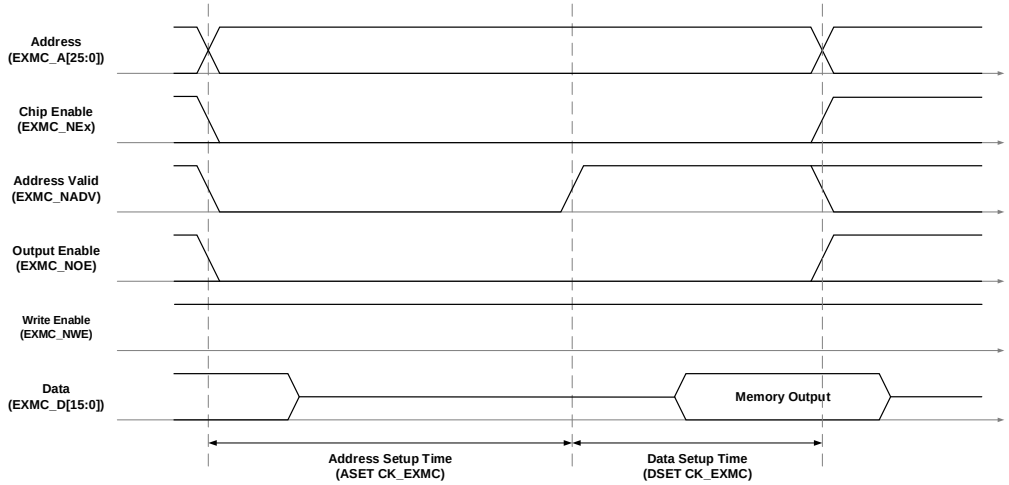

Figure 38-12. Mode 2 write access

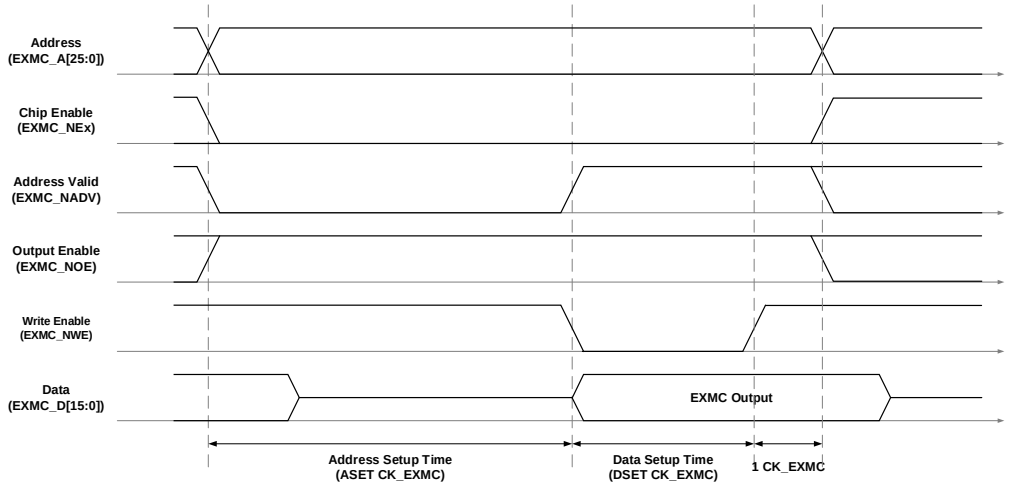

Figure 38-13. Mode B write access

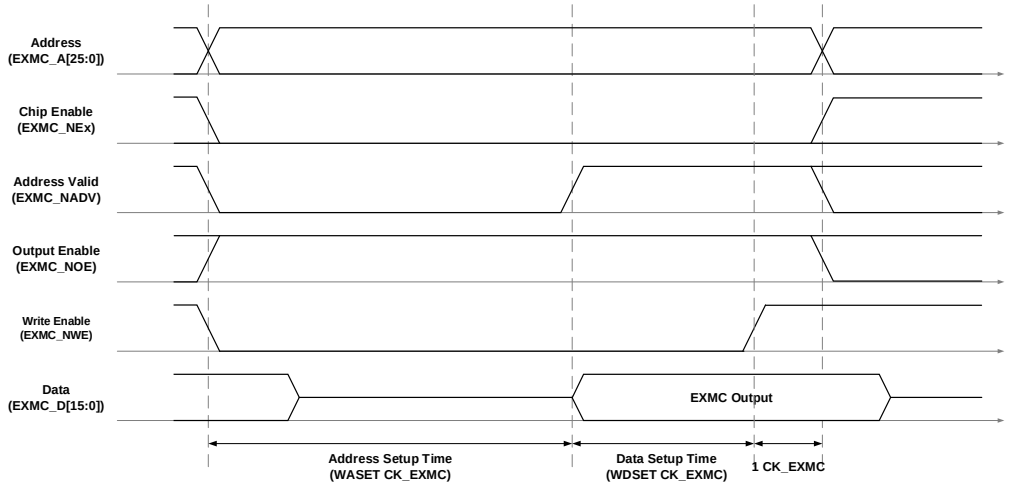

Table 38-10. Mode 2/B related registers configuration

Bit Position	Bit Name	Reference Setting Value
EXMC_SNCTLx(Mode 2, Mode B)		
31-21	Reserved	0x000
20	CCK	Depends on memory and user
19	SYNCWR	0x0
18-16	CPS	0x0
15	ASYNCWTEN	Depends on memory
14	EXMODEN	Mode 2:0x0, Mode B:0x1
13	NRWTEN	0x0
12	WEN	Depends on user
11	NRWTCFG	No effect
10	Reserved	0x0
9	NRWTPOL	Meaningful only when the bit 15 is set to 1
8	SBRSTEN	0x0
7	Reserved	0x1
6	NREN	0x1
5-4	NRW	Depends on memory
3-2	NRTP	0x2, NOR Flash
1	NRMUX	0x0
0	NRBKEN	0x1
EXMC_SNTCFGx(Read and write in mode 2,read in mode B)		
31-30	Reserved	0x0000
29-28	ASYNCMOD	Mode B:0x1
27-24	DLAT	No effect
23-20	CKDIV	No effect
19-16	BUSLAT	Time between EXMC_NE[x] rising edge to EXMC_NE[x] falling edge
15-8	DSET	Depends on memory and user
7-4	AHLD	0x0
3-0	ASET	Depends on memory and user
EXMC_SNWTCFGx(Write in mode B)		
31-30	Reserved	0x0000
29-28	WASYNCMOD	Mode B:0x1
27-20	Reserved	0x000
19-16	WBUSLAT	Time between EXMC_NE[x] rising edge to EXMC_NE[x] falling edge
15-8	WDSET	Depends on memory and user
7-4	WAHLD	0x0
3-0	WASET	Depends on memory and user

Mode C - NOR Flash OE toggling

Figure 38-14. Mode C read access

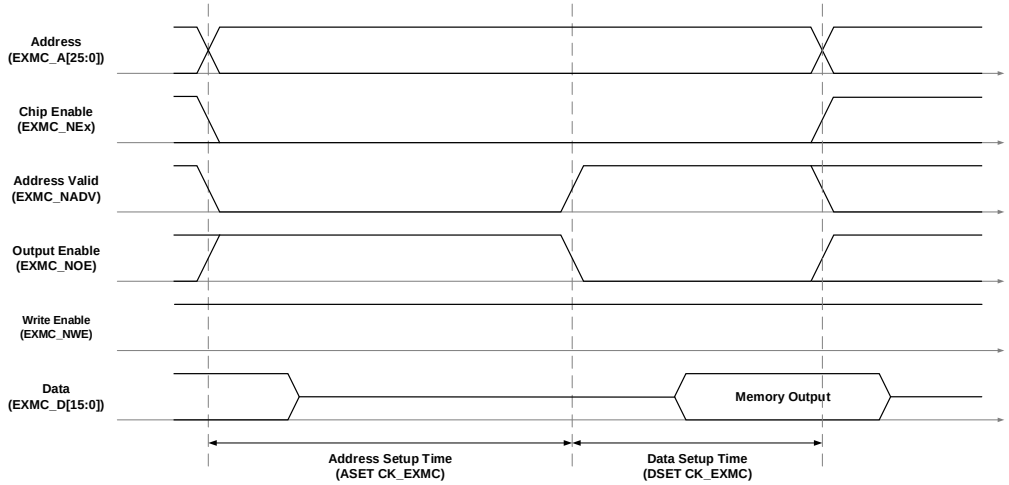

Figure 38-15. Mode C write access

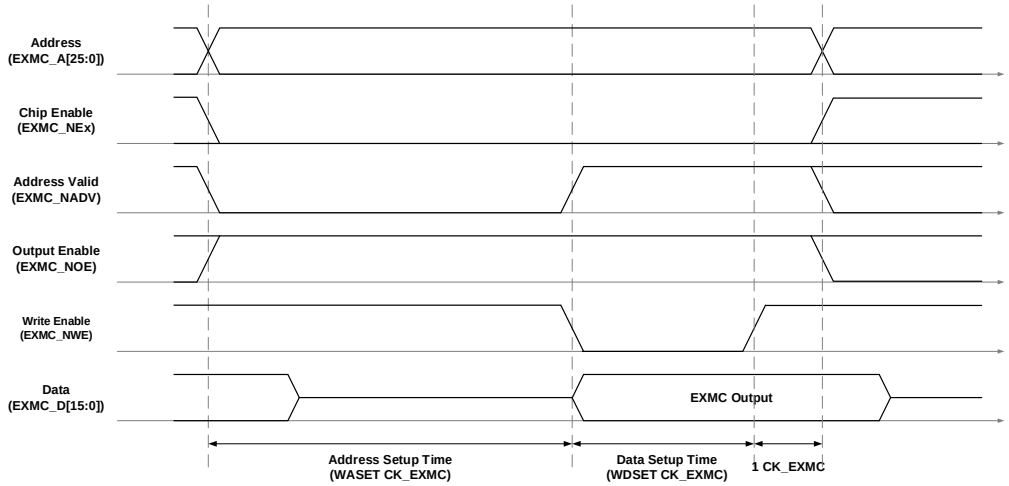

The different between mode C and mode 1 write timing is that read / write timing is specified by the same set of timing configuration, while mode C write timing configuration is independent of its read configuration.

Table 38-11. Mode C related registers configuration

Bit Position	Bit Name	Reference Setting Value
EXMC_SNCTLx		
31-21	Reserved	0x000
20	CCK	Depends on memory and user
19	SYNCWR	0x0
18-16	CPS	0x0
15	ASYNCWTEN	Depends on memory
14	EXMODEN	0x1
13	NRWTEN	0x0
12	WEN	Depends on user
11	NRWTCFG	No effect
10	Reserved	0x0

Bit Position	Bit Name	Reference Setting Value
EXMC_SNCTLx		
9	NRWTPOL	Meaningful only when the bit 15 is set to 1
8	SBRSTEN	0x0
7	Reserved	0x1
6	NREN	0x1
5-4	NRW	Depends on memory
3-2	NRTP	0x2, NOR Flash
1	NRMUX	0x0
0	NRBKEN	0x1
EXMC_SNTCFGx		
31-30	Reserved	0x0000
29-28	ASYNCMOD	Mode C:0x2
27-24	DLAT	0x0
23-20	CKDIV	0x0
19-16	BUSLAT	Time between EXMC_NE[x] rising edge to EXMC_NE[x] falling edge
15-8	DSET	Depends on memory and user
7-4	AHLD	0x0
3-0	ASET	Depends on memory and user
EXMC_SNWTCFGx		
31-30	Reserved	0x0
29-28	WASYNCMOD	Mode C:0x2
27-20	Reserved	0x00
19-16	WBUSLAT	Time between EXMC_NE[x] rising edge to EXMC_NE[x] falling edge
15-8	WDSET	Depends on memory and user
7-4	WAHLD	0x0
3-0	WASET	Depends on memory and user

Mode D - Asynchronous access with extended address

Figure 38-16. Mode D read access

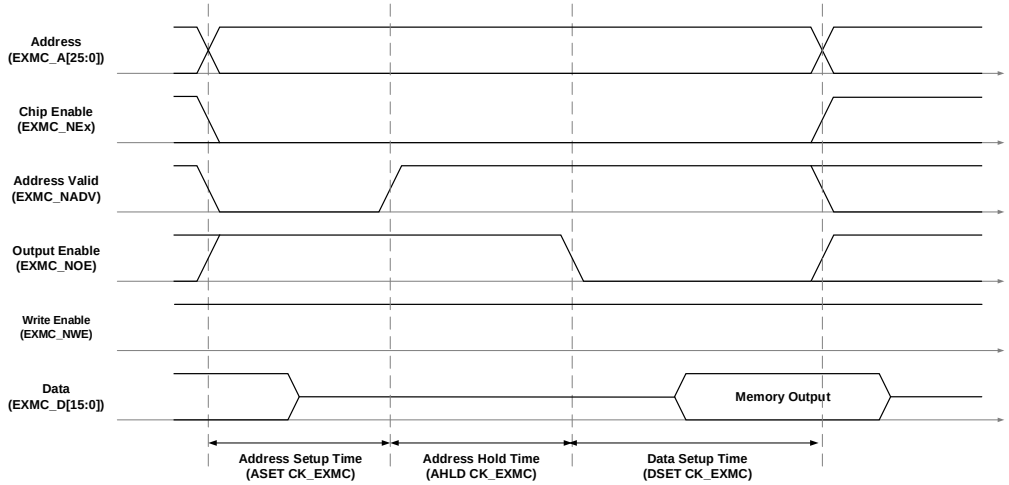

Figure 38-17. Mode D write access

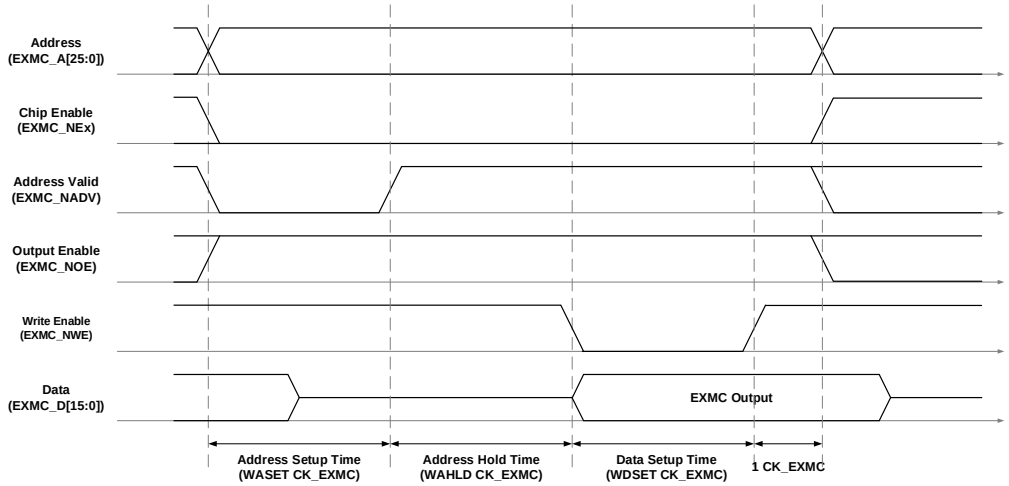

Table 38-12. Mode D related registers configuration

Bit Position	Bit Name	Reference Setting Value
EXMC_SNCTLx		
31-21	Reserved	0x000
20	CCK	Depends on memory and user
19	SYNCWR	0x0
18-16	CPS	0x0
15	ASYNCWTEN	Depends on memory
14	EXMODEN	0x1
13	NRWTEN	0x0
12	WEN	Depends on user
11	NRWTCFG	No effect
10	Reserved	0x0
9	NRWTPOL	Meaningful only when the bit 15 is set to 1
8	SBRSTEN	0x0
7	Reserved	0x1

Bit Position	Bit Name	Reference Setting Value
EXMC_SNCTLx		
6	NREN	Depends on memory
5-4	NRW	Depends on memory
3-2	NRTP	Depends on memory
1	NRMUX	0x0
0	NRBKEN	0x1
EXMC_SNTCFGx		
31-30	Reserved	0x0
29-28	ASYNCMOD	Mode D:0x3
27-24	DLAT	Don't care
23-20	CKDIV	No effect
19-16	BUSLAT	Time between EXMC_NE[x] rising edge to EXMC_NE[x] falling edge
15-8	DSET	Depends on memory and user
7-4	AHLD	Depends on memory and user
3-0	ASET	Depends on memory and user
EXMC_SNWTCFGx		
31-30	Reserved	0x0
29-28	WASYNCMOD	Mode D:0x3
27-20	Reserved	0x00
19-16	WBUSLAT	Time between EXMC_NE[x] rising edge to EXMC_NE[x] falling edge
15-8	WDSET	Depends on memory and user
7-4	WAHLD	Depends on memory and user
3-0	WASET	Depends on memory and user

Mode M - NOR Flash address / data bus multiplexing

Figure 38-18. Multiplex mode read access

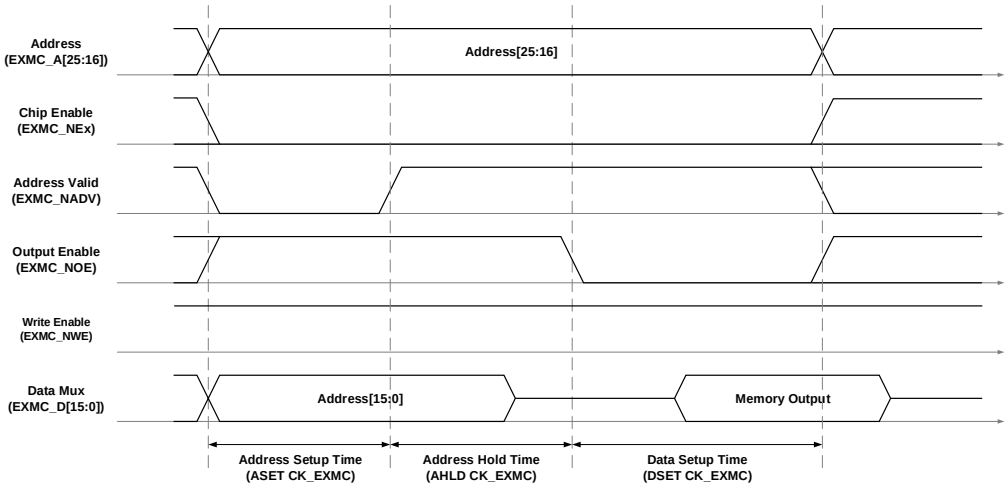

Figure 38-19. Multiplex mode write access

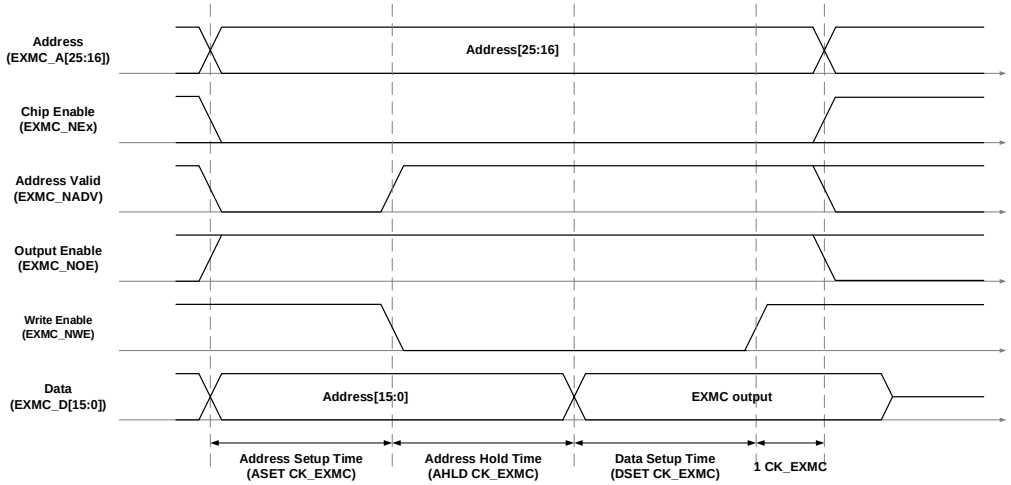

Table 38-13. Multiplex mode related registers configuration

Bit Position	Bit Name	Reference Setting Value
EXMC_SNCTLx		
31-21	Reserved	0x000
20	CCK	Depends on memory
19	SYNCWR	0x0
18-16	CPS	0x0
15	ASYNCWTEN	Depends on memory
14	EXMODEN	0x0
13	NRWTEN	0x0
12	WEN	Depends on memory
11	NRWTCFG	No effect
10	Reserved	0x0
9	NRWTPOL	Meaningful only when the bit 15 is set to 1
8	SBRSTEN	0x0
7	Reserved	0x1
6	NREN	0x1
5-4	NRW	Depends on memory
3-2	NRTP	0x2:NOR Flash
1	NRMUX	0x1
0	NRBKEN	0x1
EXMC_SNTCFGx		
31-30	Reserved	0x0
29-28	ASYNCMOD	0x0
27-24	DLAT	No effect
23-20	CKDIV	No effect
19-16	BUSLAT	Minimum time between EXMC_NE[x] rising edge to EXMC_NE[x] falling edge
15-8	DSET	Depends on memory and user

Bit Position	Bit Name	Reference Setting Value
EXMC_SNCTLx		
7-4	AHLD	Depends on memory and user
3-0	ASET	Depends on memory and user

Wait timing of asynchronous communication

Wait feature is controlled by the bit ASYNCWTEN in register EXMC_SNCTLx. During extern memory access, data setup phase will be automatically extended by the active EXMC_NWAIT signal if ASYNCWTEN bit is set. The extend time is calculated as follows:

If memory wait signal is aligned to EXMC_NOE / EXMC_NWE:

$$T_{DATA_SETUP} \geq \max T_{WAIT_ASSERTION} + 4CK_EXMC \quad (38\text{-}1)$$

If memory wait signal is aligned to EXMC_NE:

If

$$\max T_{WAIT_ASSERTION} \geq T_{ADDRES_PHASE} + T_{HOLD_PHASE} \quad (38\text{-}2)$$

$$T_{DATA_SETUP} \geq (\max T_{WAIT_ASSERTION} - T_{ADDRES_PHASE} - T_{HOLD_PHASE}) + 4CK_EXMC \quad (38\text{-}3)$$

Otherwise

$$T_{DATA_SETUP} \geq 4CK_EXMC \quad (38\text{-}4)$$

Figure 38-20. Read access timing diagram under async-wait signal assertion

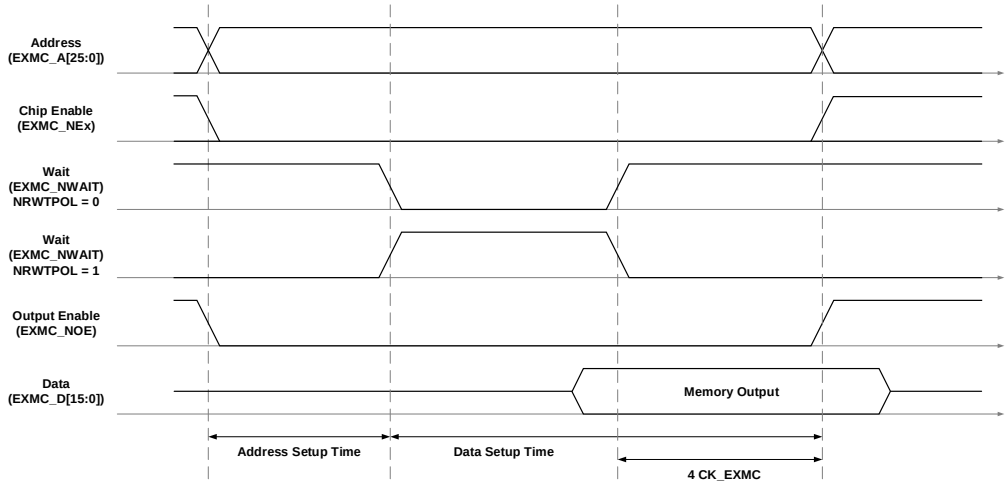

Figure 38-21. Write access timing diagram under async-wait signal assertion

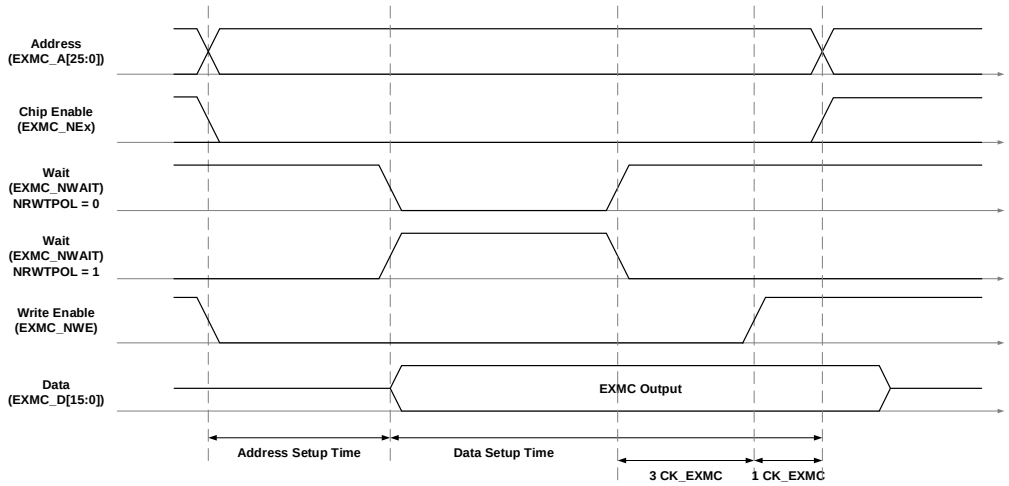

Synchronous access timing diagram

The relation between memory clock (EXMC_CLK) and system clock (CK_EXMC) is as follows:

$$\text{EXMC_CLK}=\frac{\text{CK_EXMC}}{\text{CKDIV}+1} \tag{38-5}$$

CKDIV is the synchronous clock divider ratio, it is configured through the CKDIV control field in the EXMC_SNTCFGx register.

1. Data latency and NOR Flash latency

Data latency (DLAT) is the number of EXMC_CLK cycles to wait before sampling the data. The relationship between data latency and NOR Flash specification's latency parameter is as follows:

For NOR Flash's specification excluding the EXMC_NADV cycle, their relationship should be:

$$\text{NOR Flash latency}=\text{DLAT}+2 \tag{38-6}$$

For NOR Flash's specification including the EXMC_NADV cycle, their relationship should be

$$\text{NOR Flash latency}=\text{DLAT}+3 \tag{38-7}$$

2. Data wait

Users should guarantee that EXMC_NWAIT signal's behavior matches that of the external device. This signal is configured through the EXMC_SNCTLx registers, it is enabled by the NRWTEN bit, and the active timing could be one data cycle before the wait state or active during the active state by the configuration NRWTCFG bit, while the wait signal's polarity is set by the NRWTPOL bit.

In NOR Flash synchronous burst access mode, when NRWTEN bit in EXMC_SNCTLx register is set, EXMC_NWAIT signal will be detected after a period of data latency. If EXMC_NWAIT signal detected as valid, wait cycles will be inserted until EXMC_NWAIT becomes invalid.

- The valid polarity of EXMC_NWAIT:

NRWTPOL= 1: valid level of EXMC_NWAIT signal is high.

NRWTPOL= 0: valid level of EXMC_NWAIT signal is low.

- In synchronous burst mode, EXMC_NWAIT signal has two kinds of configurations:

NRWTCFG = 1: When EXMC_NWAIT signal is active, current cycle data is not valid.

NRWTCFG = 0: When EXMC_NWAIT signal is active, the next cycle data is not valid. It is the default state after reset.

During wait-state inserted via the EXMC_NWAIT signal, the controller continues to send clock pulses to the memory, keep the chip select and output signals availably, and ignore the invalid data signal.

3. Automatic burst split at CRAM page boundary

Crossing page boundary burst access is prohibited in CRAM 1.5, an automatic burst split functionality is implemented by the EXMC. To guarantee correct burst split operation, users should specify CRAM page size by configuring the CPS bit in EXMC_SNCTLx register to inform the EXMC when this functionality should be performed.

4. Mode SM - Single burst transmission

For synchronous burst transmission, if the needed data of AXI is 16-bit, EXMC will perform a burst transmission whose length is 1. If the needed data of AXI is 32-bit, EXMC will make the transmission divided into two 16-bit transmissions, that is, EXMC performs a burst transmission whose length is 2.

For other configurations please refers to ***Table 38-5. EXMC bank 0 supports all transactions***.

Synchronous mux burst read timing - NOR, PSRAM (CRAM)

Figure 38-22. Read timing of synchronous multiplexed burst mode

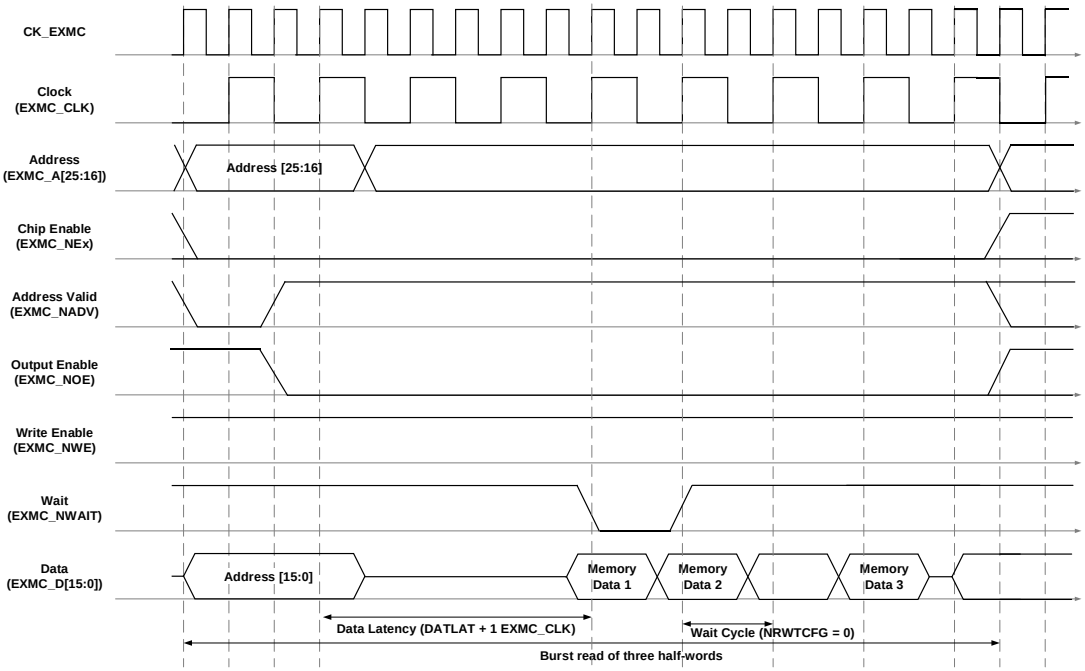

Table 38-14. Timing configurations of synchronous multiplexed read mode

Bit Position	Bit Name	Reference Setting Value
EXMC_SNCTLx		
31-21	Reserved	0x000
20	CCK	Depends on memory
19	SYNCWR	No effect
18-16	CPS	Depends on memory
15	ASYNCWTEN	0x0
14	EXMODEN	0x0
13	NRWTEN	Depends on memory
12	WEN	No effect
11	NRWTCFG	Depends on memory
10	Reserved	0x0
9	NRWTPOL	Depends on memory
8	SBRSTEN	0x1, burst read enable
7	Reserved	0x1
6	NREN	Depends on memory
5-4	NRW	0x1
3-2	NRTP	Depends on memory, 0x1/0x2
1	NRMUX	0x1, Depends on memory and users
0	NRBKEN	0x1
EXMC_SNTCFGx(Read)		
31-30	Reserved	0x0
29-28	ASYNCMOD	0x0

27-24	DLAT	Data latency
23-20	CKDIV	The figure above: 0x1,EXMC_CLK=2 CK_EXMC
19-16	BUSLAT	Time between EXMC_NE[x] rising edge to EXMC_NE[x] falling edge
15-8	DSET	No effect
7-4	AHLD	No effect
3-0	ASET	No effect

Mode SM –Synchronous mux burst write timing – NOR, PSRAM (CRAM)

Figure 38-23. Write timing of synchronous multiplexed burst mode

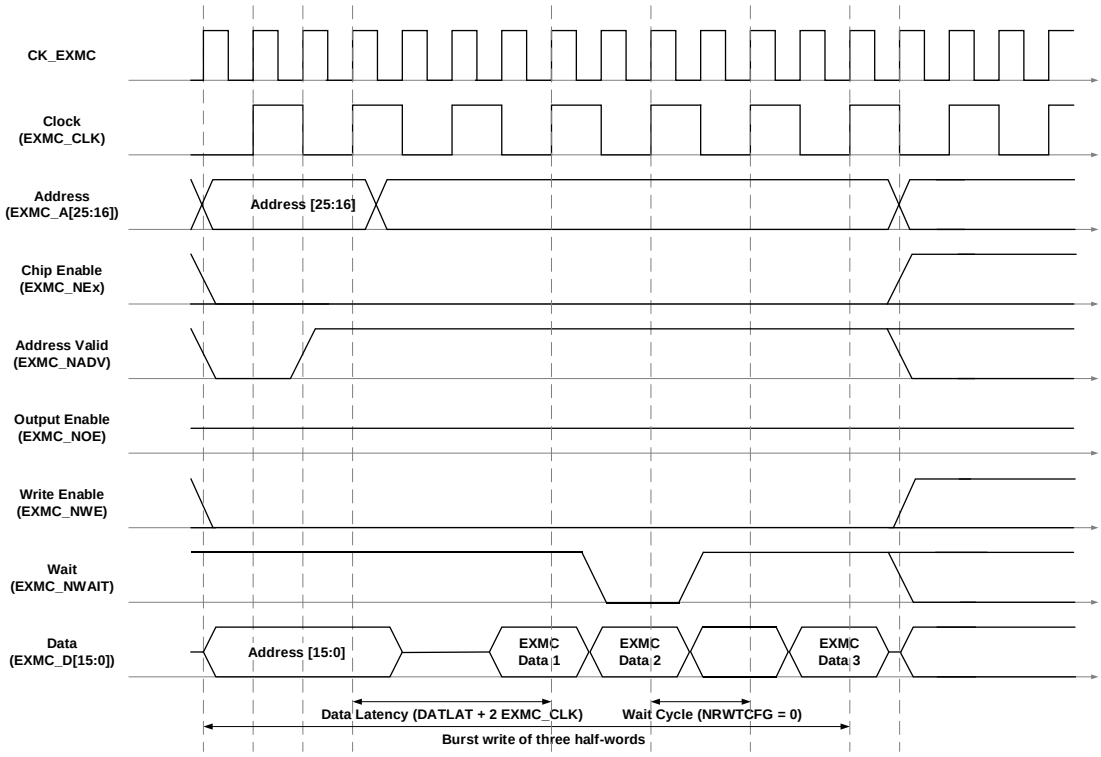

Table 38-15. Timing configurations of synchronous multiplexed write mode

Bit Position	Bit Name	Reference Setting Value
EXMC_SNCTLx		
31-21	Reserved	0x000
20	CCK	Depends on memory
19	SYNCWR	0x1, synchronous write enable
18-16	CPS	Depends on memory
15	AYSNCWAIT	0x0
14	EXMODEN	0x0
13	NRWTEN	Depends on memory
12	WEN	0x1
11	NRWTCFG	0x0(Here must be zero)
10	Reserved	0x0
9	NTWTPOL	Depends on memory

Bit Position	Bit Name	Reference Setting Value
EXMC_SNCTLx		
8	SBRSTEN	No effect
7	Reserved	0x1
6	NREN	Depends on memory
5-4	NRW	0x1
3-2	NRTP	0x1
1	NRMUX	0x1, Depends on users
0	NRBKEN	0x1
EXMC_SNTCFGx(Write)		
31-30	Reserved	0x0
29-28	ASYNCMOD	0x0
27-24	DLAT	Data latency
23-20	CKDIV	The figure above: 0x1, EXMC_CLK=2 CK_EXMC
19-16	BUSLAT	No effect
15-8	DSET	No effect
7-4	AHLD	No effect
3-0	ASET	No effect

38.3.7. NAND flash controller

EXMC has partitioned Bank2 as NAND Flash access field, Bank1 and Bank3 are reserved. Each bank has its own set of control register for access timing configuration. 8- and 16-bit NAND Flash are supported. An ECC hardware is provided for the NAND Flash controller to ensure the robustness of data transfer and storage.

NAND flash interface function

Table 38-16. 8-bit or 16-bit NAND interface signal

EXMC Pin	Direction	Functional description
EXMC_A[17]	Output	NAND Flash address latch (ALE)
EXMC_A[16]	Output	NAND Flash command latch (CLE)
EXMC_D[7:0]/ EXMC_D[15:0]	Input /Output	8-bit multiplexed, bidirectional address/data bus
		16-bit multiplexed, bidirectional address/data bus
EXMC_NCE	Output	Chip select
EXMC_NOE(NRE)	Output	Output enable
EXMC_NWE	Output	Write enable
EXMC_NWAIT/ EXMC_INT	Input	NAND Flash ready/busy input signal to the EXMC

Supported memory access mode

Table 38-17. Bank2 of EXMC support the memory and access mode

Memory	Mode	R/W	AXI transaction size	Comments
8-bit NAND	Async	R	8	
	Async	W	8	
	Async	R	16	Automatically split into 2 EXMC accesses
	Async	W	16	
	Async	R	32	Automatically split into 4 EXMC accesses
	Async	W	32	
	Async	R	64	Automatically split into 8 EXMC accesses
	Async	W	64	
16-bit NAND	Async	R	8	
	Async	W	8	Not support this operation
	Async	R	16	
	Async	W	16	
	Async	R	32	Automatically split into 2 EXMC accesses
	Async	W	32	
	Async	R	64	Automatically split into 4 EXMC accesses
	Async	W	64	

NAND flash controller timing

EXMC can generate the appropriate signal timing for NAND Flash and other devices. Each bank has a corresponding register to manage and control the external memory, such as EXMC_NCTL, EXMC_NINTEN, EXMC_NCTCFG, EXMC_NATCFG and EXMC_NECC. Among these registers, EXMC_NCTCFG, EXMC_NATCFG registers contain four timing parameters individually which are configured according to user specification and features of the external memory.

Table 38-18. NAND flash programmable parameters

Programmable parameter	W/R	Unit	Functional description	NAND Flash	
				Min	Max
High impedance time of the memory data bus (HIZ)	W/R	CK_EXMC	Time to keep the data bus high impedance after starting write operation	1	255
Memory hold time (HLD)	W/R	CK_EXMC	The number of CK_EXMC clock cycles to keep address valid after sending the command. In write mode, it is also data hold time.	1	254
Memory wait time (WAIT)	W/R	CK_EXMC	Minimum duration of sending command	2	255
Memory setup time (SET)	W/R	CK_EXMC	The number of CK_EXMC clock cycles to build address before sending command	1	256

The ***Figure 38-24. Access timing of common memory space of NAND flash controller*** shows the programmable parameters which are defined in the common memory space operations. The programmable parameters of Attribute memory space are defined as well.

Figure 38-24. Access timing of common memory space of NAND flash controller

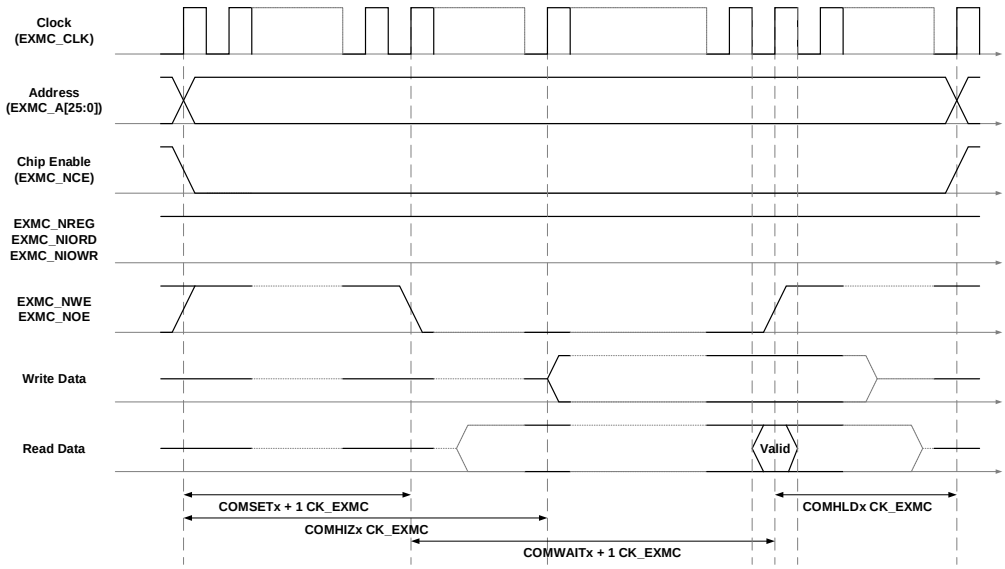

NAND flash operation

When EXMC sends command or address to NAND Flash, it needs to use the command latch signal (A[16]) or address latch signal (EXMC_A[17]), namely, the CPU needs to perform write operation in particular address.

Example: NAND Flash read operation steps:

1. Configure EXMC_NCTL and EXMC_NCTCFG register. When pre-waiting is needed,

EXMC_NATCFG has to be configured.

2. Send the command of NAND Flash read operation to the common space. Namely, during the valid period of EXMC_NCE and EXMC_NWE, when EXMC_CLE (EXMC_A[16]) becomes valid (high level), data on the I/O pins is regarded as a command by NAND Flash.
3. Send the start address of read operation to the common space. During the valid period of EXMC_NCE and EXMC_NWE, when EXMC_ALE (EXMC_A[17]) becomes valid (high level), the data on the I/O pins is regarded as an address by NAND Flash.
4. Waiting for NAND ready signal. In this period, NAND controller will maintain EXMC_NCE valid.
5. Read data byte by byte from the data area of the common space.
6. If new commands or address haven't been written, data of the next page can be read out automatically. You can also read the data of the next page by going to step 3 and then writing a new address or writing a new command and address in step 2.

NAND flash pre-wait functionality

Some NAND Flash requires that the controller should wait for NAND Flash to be ready, after the first command byte and following the address bytes are send, and some EXMC_NCE-sensitive NAND Flash also requires that the EXMC_NCE must remain valid before it is ready.

Taking TOSHIBA128 M x 8 bit NAND Flash as an example:

Figure 38-25. Access to none "NCE don't care" NAND Flash

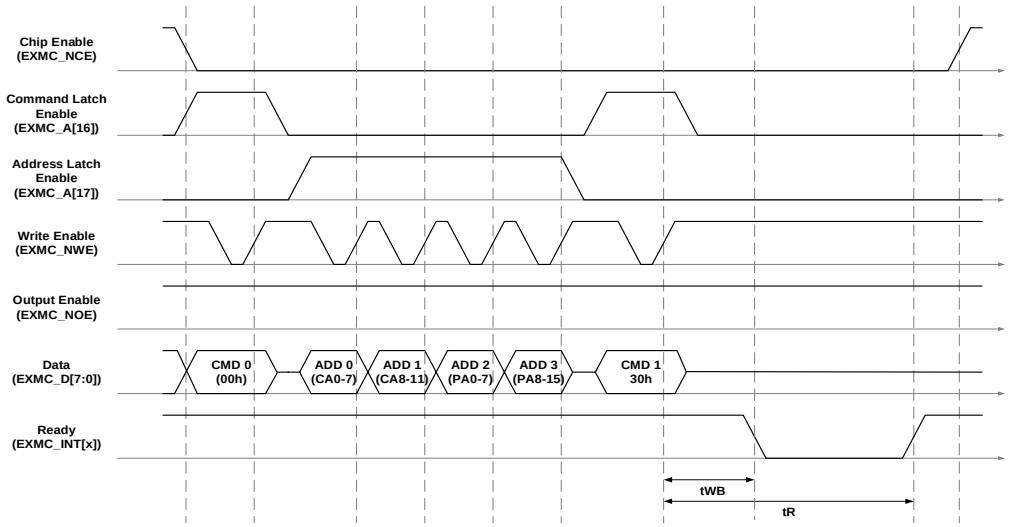

1. Write CMD0 into NAND Flash bank common space command area.
2. Write ADD0 into NAND Flash bank common space address area.
3. Write ADD1 into NAND Flash bank common space address area.
4. Write ADD2 into NAND Flash bank common space address area.
5. Write ADD3 into NAND Flash bank common space address area.
6. Write CMD1 into NAND Flash bank attribute space command area.

In step 6, EXMC uses the operation timing defined in EXMC_NATCFG register. After a period

of ATTHLD, NAND Flash waits for EXMC_INT signal to be busy, and the time period of ATTHLD should be greater than t_{WB} (t_{WB} is defined as the time from EXMC_NWE high to EXMC_INT low). For NCE-sensitive NAND Flash, after the first command byte following address bytes has been entered, EXMC_NCE must remain low until EXMC_INT goes from low to high. The ATTHLD value of attribute space can be set in EXMC_NATCFG register to meet the timing requirements of t_{WB}. MCU can use the attribute space timing when writing the first command byte following address bytes to the NAND Flash device. In other times, the MCU must use the common space timing.

NAND flash ECC calculation module

An ECC calculation hardware is implemented in Bank2 respectively. Users can choose page size according to the ECCSZ control field in the EXMC_NCTL register. ECC offers one bit error correction and two bits errors detection.

When NAND memory block is enabled, ECC module will detect EXMC_D[15:0], EXMC_NCE and EXMC_NWE signals. When a data size of ECCSZ has been read or written, software must read the calculated ECC in the EXMC_NECC register. When a recalculation of ECC is needed, software must clear the EXMC_NECC register value by resetting ECCEN bit of EXMC_NCTL register to zero, and then restart ECC calculation by setting the ECCEN bit of EXMC_NCTL to 1.

38.3.8. SDRAM controller

Characteristics

- Two independent SDRAM devices.
- 8-,16- or 32-bit data bus width.
- Up to 13-bits Row Address, 11-bits Column Address and 2-bits internal banks address.
- Supported memory size: 4x16Mx32bit(256 MB), 4x16Mx16bit (128 MB) and 4x16Mx8bit (64 MB).
- AXI double word, word, half-word and byte access.
- Independent Chip Select control for each memory device.
- Independent configuration for each memory device.
- Write enable and byte lane select outputs.
- Automatic row and bank boundary management.
- Multi-device Ping-Pong access.
- SDRAM clock configured as $f_{CK_EXMC}/2$, $f_{CK_EXMC}/3$, $f_{CK_EXMC}/4$ or $f_{CK_EXMC}/5$.
- Programmable timing parameters.
- Automatic Refresh operation with programmable Refresh rate.
- SDRAM power-up initialization by software.
- CAS latency of 1,2,3.
- Write Data FIFO with 16 x35-bit depth.
- Write Address FIFO with 16x31-bit depth.
- Cacheable Read Data FIFO with 6 x32-bit depth.

- Cacheable Read address FIFO with 6 x14-bit depth.
- Adjustable read data sample clock.
- Self-refresh mode.
- Power-down mode.

SDRAM overview

Synchronous dynamic random-access memory (SDRAM) is a dynamic random access memory (DRAM) whose external interface is coordinated by a synchronous external clock, this clock is provided by the EXMC through the SDRAM clock (EXMC_SDCLK) pin, and its frequency could be configured to be $f_{CK_EXMC}/2$, $f_{CK_EXMC}/3$, $f_{CK_EXMC}/4$ or $f_{CK_EXMC}/5$ according to the SDRAM clock configuration bit (SDCLK) in the EXMC_SDCTLx register. Commands and data are always latched by the SDRAM on the rising edge of EXMC_SDCLK and change on its falling edge.

SDRAM is divided into several independent sections of memory called banks, allowing the device to operate on several memory access commands in an interleaved fashion to achieve greater concurrency and higher data transfer rates. Each bank could be pictured as a matrix with each entry size equals to the memory data bus width, and the size of the matrix is the number of rows by the number of columns, thus each memory bank size could be calculated as entry_size*rows*columns. When interfacing with SDRAM, users should specify the memory dimension configurations to EXMC through NBK, SDW, RAW and CAW bits in the SDRAM control register EXMC_SDCTLx.

Due to the volatile nature of SDRAM, periodic refresh cycle is necessary to maintain the stored information. Two refresh mode could be selected, self-refresh and auto-refresh mode. Self-refresh mode is typically set in low power mode when EXMC is suspended, refresh is provided by the SDRAM and timed by its internal counter. In auto-refresh mode, refresh command is provided by the EXMC, this is necessary because SDRAM must maintain the stored information during an on-going transaction, refresh commands are issued periodically on the data bus timed by ARINTV bits in EXMC_SDARI register, the number of consecutive refresh needed is configured through NARF bits in EXMC_SDCMD register. Refresh command always take precedence over other command or read / write operation to guarantee correct data storage, when memory access occurs simultaneously with refresh command, memory access is buffered and processed when refresh command is completed. If a new refresh command occurs while the previous refresh command is buffered, a refresh error flag (REIF) is raised in EXMC_SDSTAT register, and interrupt is generated if REIE is set and cleared by setting REC bit in EXMC_SDARI register.

CAS latency defines the delay in clock cycles, between the issued read command and the availability of the first piece of data form SDRAM. CAS latency is configured by the CL bits in the EXMC_SDCTLx register.

Mode register is used to define the specific operating mode of SDRAM, including burst length, burst type, CAS latency, and write mode. Users should refer to the SDRAM's specification for correct configuration. Once the operating mode has been decided, users should write the

mode register content to MRC bits and issuer load mode register command through CMD bits in EXMC_SDCMD register. Load mode register command should be performed before read or write access, otherwise SDRAM might not work as expected.

SDRAM controller overview

The synchronous dynamic random-access memory controller (SDRAMC) block acts as the interface between MCU and SDRAM memory. It translates AXI transactions into the appropriate SDRAM protocol, and meanwhile, makes sure the access timing requirements of the external SDRAM devices are satisfied by the configuration of EXMC_SDTCFG register.

SDRAMC could be divided into 4 sub-modules, the read / write split, control registers, finite state machine, and signal generator. Two pairs of FIFO is implemented to increase memory access efficiency, one pair for write address and data, the other pair for read address and data. SDRAMC's block diagram is shown in ***Figure 38-26. SDRAM controller block diagram***.

Figure 38-26. SDRAM controller block diagram

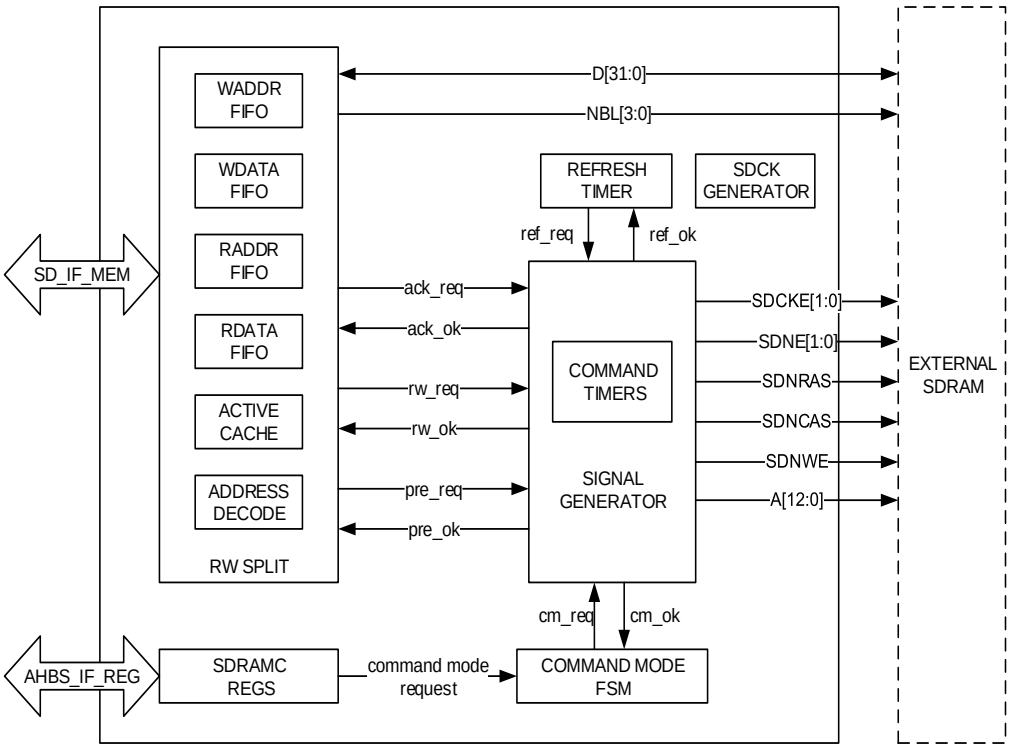

The signal generator handles requests from command mode FSM, Refresh timer and the RW split module.

The command timers are composed by timing counters which take case the timing specification of the SDRAM protocol.

SDRAM commands are issued by the SDRAM controller interface in the following pattern.

Table 38-19. SDRAM command truth table

SDNE	NRAS	NCAS	SDNWE	A[n]	A[10]	A[m]	Command
H	X	X	X	X	X	X	Command inhibit (No operation)
L	H	H	H	X	X	X	No operation
L	H	H	L	X	X	X	Burst Terminate
L	H	L	H	Bank	L	Col	Burst read from current row
L	H	L	H	Bank	H	Col	Burst read from current row, precharge when done
L	H	L	L	Bank	L	Col	Burst write to current row
L	H	L	L	Bank	H	Col	Burst write to current row, precharge when done
L	L	H	H	Bank	Row	Row	Active, open row for read / write
L	L	H	L	Bank	L	X	Precharge, close current row of the selected bank
L	L	H	L	X	H	X	Precharge all, close current row of all banks
L	L	L	H	X	X	X	Auto-refresh when SDCKE = 1 Self-refresh when SDCKE = 0
L	L	L	L	L	Mode	Mode	Load mode register

SDRAM controller operation sequence

IO configuration

SDRAMC IO port must be configured first to interface with external SDRAM, otherwise it is left as general purpose IOs, and could be utilized by other modules. IO ports related to SDRAM operations are summarized in ***Table 38-20. IO definition of SDRAM controller***.

Table 38-20. IO definition of SDRAM controller

Signal	Direction	Description
EXMC_SDCLK	O	SDRAM memory clock
EXMC_SDCKE[0]	O	Clock enable for SDRAM memory 0
EXMC_SDCKE[1]	O	Clock enable for SDRAM memory 1
EXMC_SDNE[0]	O	Chip select for SDRAM memory 0, active low
EXMC_SDNE[1]	O	Chip select for SDRAM memory 1, active low
EXMC_NRAS	O	Row address strobe, active low
EXMC_NCAS	O	Column address strobe, active low
EXMC_SDNWE	O	Write enable, active low
EXMC_A[12:0]	O	Address
EXMC_A[15:14]	O	Bank address
EXMC_D[31:0]	I/O	Read / write Data
EXMC_NBL[3:0]	O	Write data mask, the Low byte lane is accessed

Controller initialization

Users should follow procedure to initialize the SDRAM controller, the initialization sequence

could be applied to a single SDRAM, or two SDRAM simultaneously. This choice is made by the device selection bits DS0 and DS1 in EXMC_SDCMD register. Initialization sequence must be performed before any read / write memory access, otherwise, EXMC's behavior is not guaranteed.

1. Control parameter specification: SDRAM control register EXMC_SDCTLx should be programed first to specify the external memory dimension, clock configuration, and read / write strategy.
2. Timing parameter specification: SDRAM timing configuration register EXMC_SDTCFGx should be programed according to external SDRAM data sheet for SDRAM controller to keep pace with the operation of the external SDRAM. RPD and ARFD must be programed in EXMC_SDTCFG0, those corresponding bit position in EXMC_SDTCFG1 are reserved.
3. Enable SDCLK: SDCLK enable command should be issued to the corresponding SDRAM devices, this is done by writing 0b001 to the CMD bits in the EXMC_SDCMD register, DS0 and DS1 selected which device will accept the command and start receiving EXMC_SDCLK.
4. Power-up delay: typical delay is around 100us.
5. Precharge all: A precharge all command should be issued to reset all the SDRAM memory banks to their idle state, waiting for subsequent operation. This is done by writing 0b010 to the CMD bits in the EXMC_SDCMD register, DS0 and DS1 defines which SDRAM device will receive this command.
6. Set auto-refresh: Auto-refresh command is sent by writing 0b011 in the CMD bits in EXMC_SDCMD register. Users should also specify the number of consecutive refresh command to issue each time by configuring the NARF bits, this configuration is requested by SDRAM specification, it is also where users should refer to.DS0 and DS1 defines which SDRAM device will receive this command.
7. Mode register configuration: Mode register is programed by writing the mode register content in MRC bits in EXMC_SDCMD register, mode register specifies the operating mode of SDRAM, such modes include burst length, burst type, CAS latency, and write mode. Users should refer to the SDRAM's specification for correct configuration. CAS latency should be the same as the CL bits in EXMC_SDCTLx register, and burst length of 1 must be selected, otherwise SDRAMC's behavior is not guaranteed. If the mode register contents are different for both SDRAM devices, this step should be repeated, targeting one device a time by the DS0 and DS1 configuration.
8. Set auto-refresh rate: Auto-refresh rate corresponds to the time between refresh cycles, users must ensure that this time period match that of the SDRAM specification.

Now SDRAMC is ready to proceed with memory access. If system reset happens, the initialization sequence must be repeated. Initialization must be performed at least once before SDRAM read / write access.

Precharge

When the memory controller needs to access a different row, it must first return that bank's

sense amplifiers to an idle state, ready to sense the next row. This is known as a precharge operation, or deactivating the row. A precharge may be commanded explicitly by the precharge all command, or it may perform automatically at the conclusion of a read or write operation. There is a minimum time, the row precharge delay (RPD), which must elapse before that bank is fully idle and it may receive another activate command.

Activate

The activate command activates an idle bank. It presents a 2-bit bank address EXMC_A[15:14] and a 13-bit row address EXMC_A[12:0], and causes a read of that row into the bank's array of 16,384 column sense amplifiers. This also known as opening the row. This operation has the side effect of refreshing the dynamic memory storage cells of that row.

Once the row has been activated, read / write commands are possible to that row. Activation requires a minimum amount of time, called the row-to-column delay (RCD) before read / write to it may occur. This time, rounded up to the next multiple of the clock period, specifies the minimum number of wait cycles between an active command and a read / write command. During these wait cycles, additional commands may be sent to other banks, because each bank operates completely independently.

Read / write access

SDRAMC can translate AXI single and burst read operation into single memory access. SDRAMC always keeps track of the activated row number in order to perform consecutive read access. If the next read location is in the same row or another active row, read access is proceeded without interruption, else a precharge command is issued to deactivate the current row, followed by the activation of the row where the next read access is targeted, and then the read access is performed. A read FIFO is design to cache the read data during CAS latency and pipe line delay (PIPED), Burst read (BRSTRD) must be set in order to enable the FIFO.

The ***Figure 38-27. Burst read operation*** shows a burst read access to an in active row, a row activation command is issued before read access. If read operation were performed on an active row, row address strobe is not necessary, only column address strobe is needed.

Figure 38-27. Burst read operation

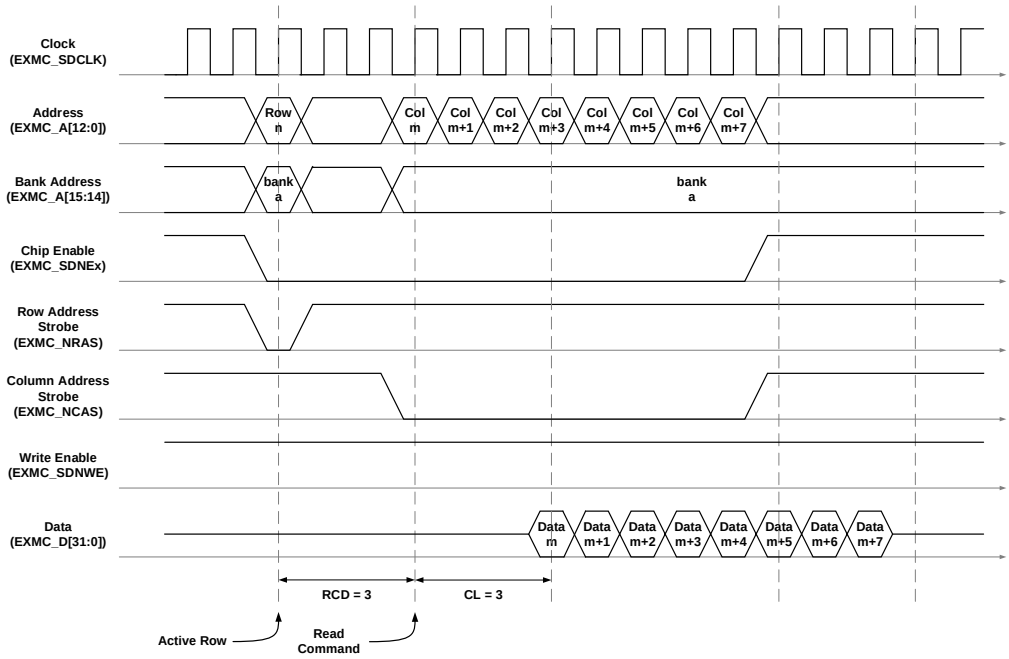

An internal generated clock, which has an adjustable delay from the CK_EXMC can be used to sample read data from external memories. This clock can be helpful when the read data can't be sampled correctly by CK_EXMC. When this clock is enabled, the read data will be firstly stored in an asynchronous FIFO before returned to the AXI bus. Additional delays of about 2~3 CK_EXMC may be brought into the reading command process.

A clock delay chain module is added after the CK_EXMC input to the signal generator, this delayed clock is used as the sampling clock of the input data. The delay chain is controlled by the EXMC_SDRSCTL register, RSEN bit select whether the CK_EXMC output is delay at all, SSCR bit select whether 1 additional CK_EXMC cycle is added to the total delay, and SDSC select how many delay cells is add, the number of delay cell could be added is within 0 and 15. The following diagram shows how delay chain is added.

Figure 38-28. Data sampling clock delay chain

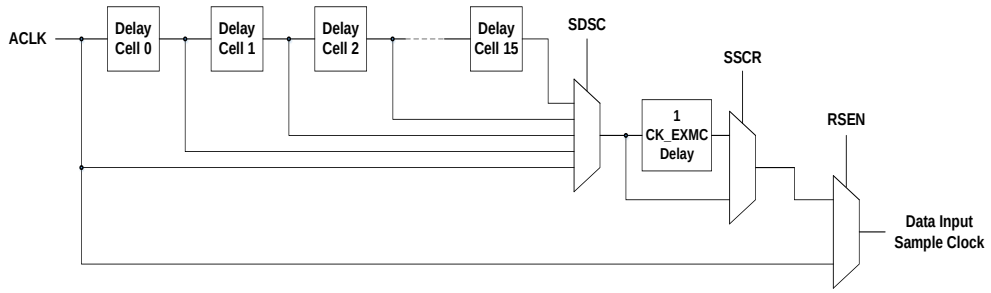

SDRAMC can translate AXI single and burst write operation into single memory access. Write protection must be disabled by resetting WPEN bit in EXMC_SDCTLx register. SDRAMC always keeps track of the activated row number in order to perform consecutive write access. If next write location is in the same row or another active row, write access is proceeded without interruption, else a precharge command is issued to deactivate the current row, followed by the activation of the row where the next write access is targeted, and then the

write access is performed.

The *Figure 38-29. Burst write operation* shows a write burst access to an inactive row, a row activation command is issued before write access. If write operations were performed on an active row, row address strobe is not necessary, only column address strobe is needed.

Figure 38-29. Burst write operation

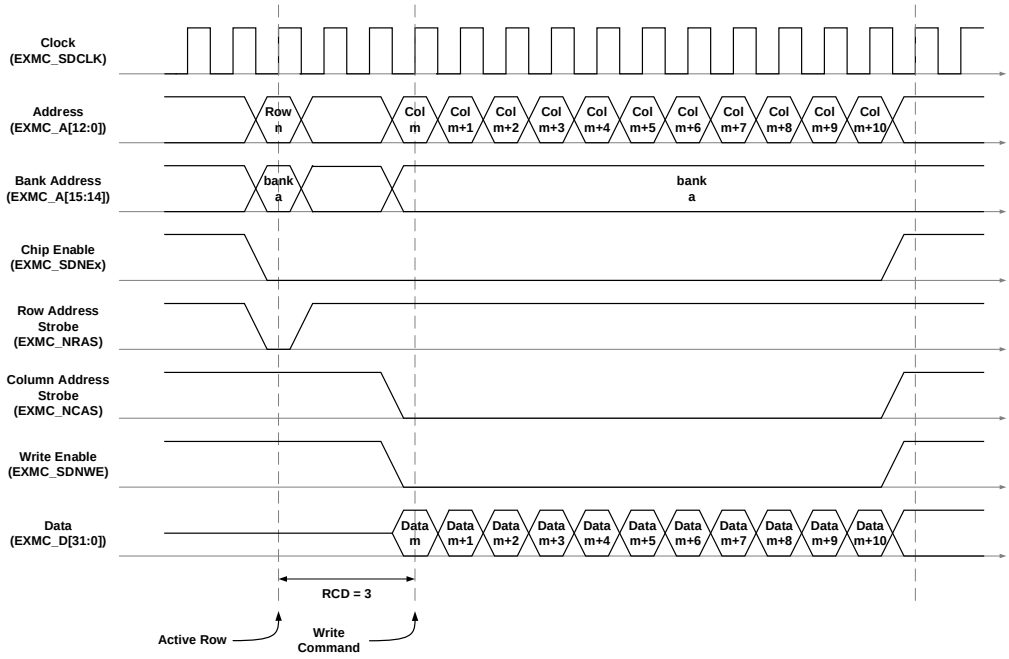

The RW split module accepts AXI commands, and transfers them to single read / write accesses on the SDRAM memory according to the ratio of the data width between the AXI bus and the SDRAM memory interface.

Inside the RW split module, there are two write FIFOs, which buffers the data and address of the AXI write commands. When neither of the write FIFOs is empty, write access occurs.

When the BRSTRD bit of EXMC_SDCTL0 register is set, the RW split module can anticipate the next read access. The read FIFOs are used to store data read in advance during the CAS latency period (configured by the CL bits of EXMC_SDCTLx) and during the PIPED delay (configured by the PIPED bits of EXMC_SDCTL0).

The RDATA FIFO can buffers up to 6 32-bit read data words, while the RADDR FIFO carries 6 14-bit read address tags to identify each of them. Every address tag is comprised of 11 bits for the column address, 2 bits for the internal bank address and 1 bit to select the SDRAM memories.

When there is a read commands on the AXI bus, the RW split module will firstly checks whether the address matches one of the address tags, and data are directly read from the FIFO when it is true. Otherwise, a new read command is issued to the memory and the FIFO is updated with new data. If the FIFO is full, the older data are lost.

Figure 38-30. Read access when FIFO not hit (BRSTRD=1, CL=2, SDCLK=2, PIPED=2) and *Figure 38-31. Read access when FIFO hit (BRSTRD=1)* specify the Read FIFO

operation.

Figure 38-30. Read access when FIFO not hit (BRSTRD=1, CL=2, SDCLK=2, PIPED=2)

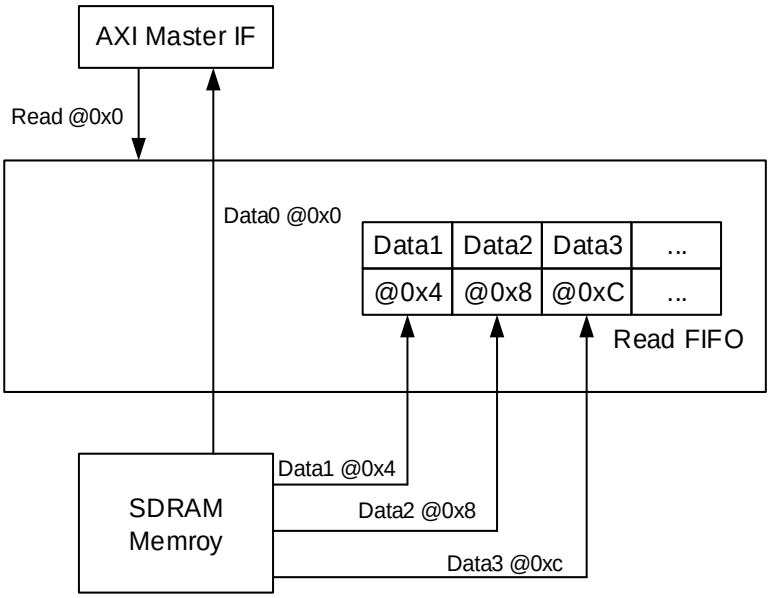

Figure 38-31. Read access when FIFO hit (BRSTRD=1)

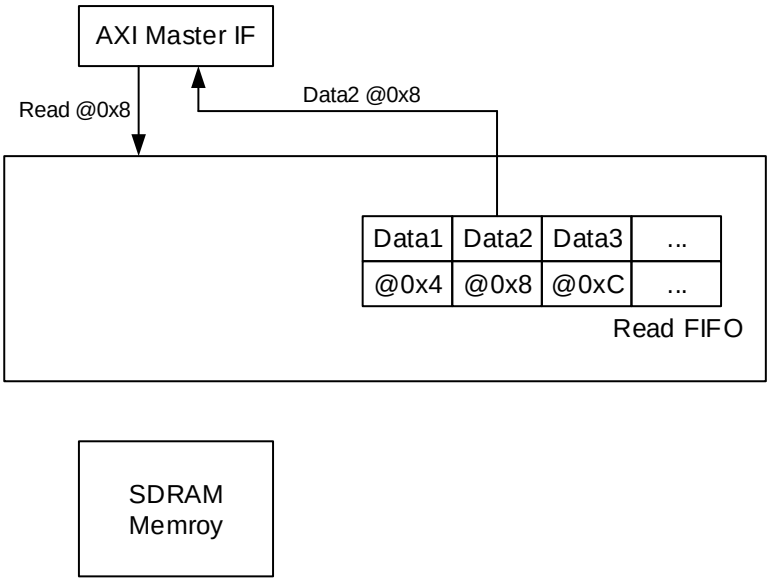

The read FIFO will be flushed and ready to be filled with new data, when a write access or a precharge command occurs.

The address decoder sub-module translates the address of the AXI bus address to chip select, internal bank address, row address and column address according to the configuration of external memory device.

The active cache sub-module records whether the internal banks (up to 8) are in the active state. When an internal bank is in active state, the corresponding row address is also recorded. When an AXI access or an auto-refresh command is issued, the RW split module will look up this record and decide whether to generate the Active/Precharge commands or not.

Before read / write operation, the targeted row must be activated, the value of EXMC_A[15:14] selects the bank, and EXMC_A[12:0] select the row. The selected row remains active until a precharge command is issued. The precharge command is used to deactivate an active row in a particular bank or the active row in all banks. A precharge command must be issued before activating a different row in the same bank. Active and precharge are automatically issued by the EXMC, its correctness depends on memory dimension configurations discussed previously, read and write timing diagram concerning automatic row activation and precharge are depicted as follows.

Figure 38-32. Cross boundary read operation

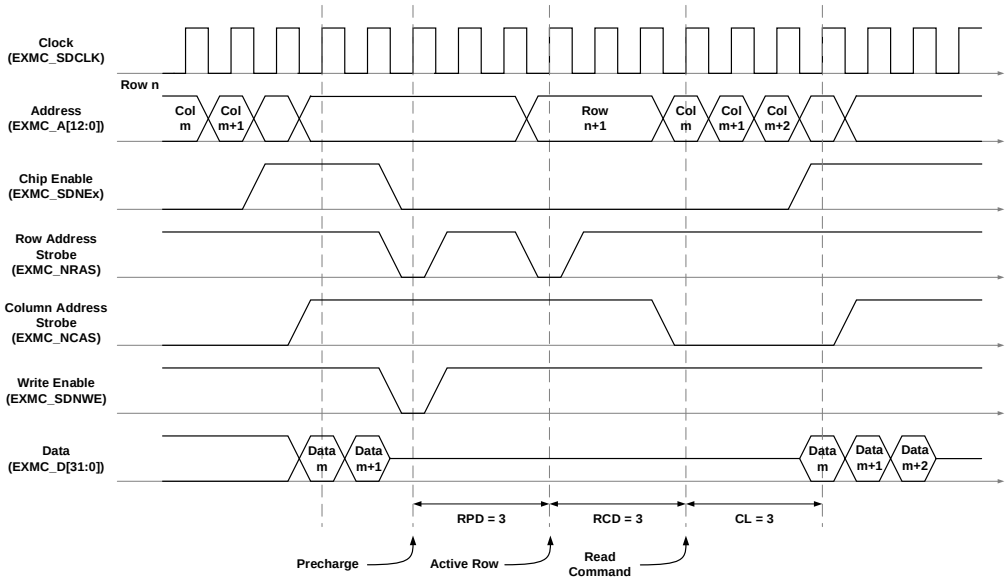

Figure 38-33. Cross boundary write operation

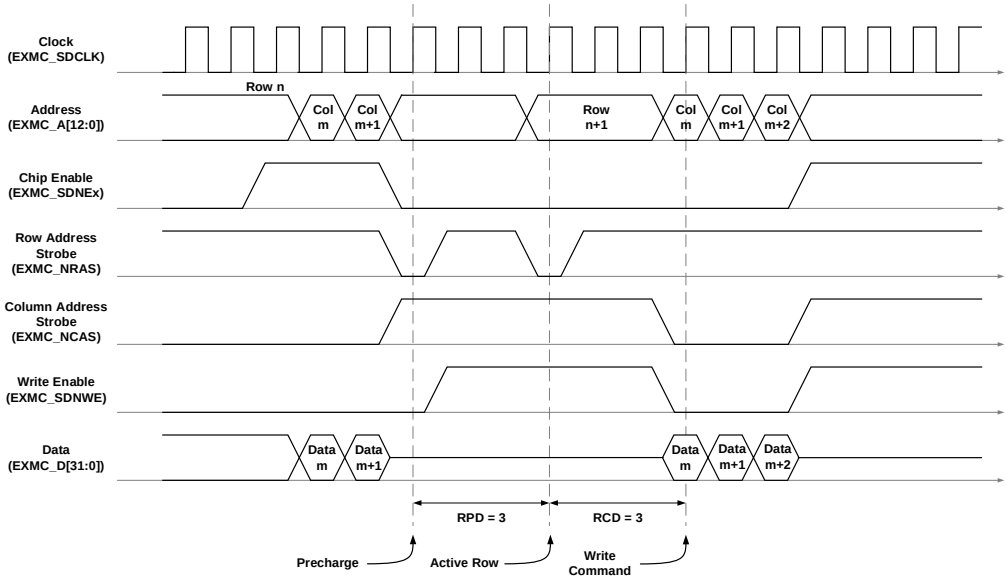

The above diagrams depict read and write timing waveform when memory access crosses row boundary, the following steps are preformed automatically:

1. Precharge the current active row.
2. Next row's activation.

3. Read / write access.

Precharge delay (PRD) and row to column delay (RCD) are added according to their configuration in EXMC_SDTCFGx register, other timing parameters should be configured as SDRAM specification requires.

When this boundary happens to be at the end of a bank, two cases are possible:

1. When the current bank is not the last bank, the activation of the first row of the next bank is performed, and this supports all row, column, and bus width configuration.
2. When the current bank is the last bank, and row, column, and bus width are configured as, 13-bit, 11-bit, and 32-bit respectively, EXMC continues to read / write from the second SDRAM device (SDRAM device 1), assuming that the current SDRAM is device 0.

Low power modes

Two low power mode are supported:

1. Self-refresh mode: In self-refresh mode, refresh is provided by the SDRAM itself to maintain data integrity without external clock (EXMC_SDCLK). It is entered by writing 0b101 to CMD bits in EXMC_SDCMD register, DS0 andDS1 determines which SDRAM device will receive the command. EXMC_SDCLK stops running after a RASD delay if this command is issued to both SDRAM devices or one of the SDRAM device is not initialized.
2. Power-down mode: In power-down mode, refresh is provided by the SDRAM controller. It is entered by writing 0b110 to CMD bits in EXMC_SDCMD register, DS0 and DS1 determines which SDRAM device will receive the command. If the write data FIFO is not empty, all data are sent to the memory before activating power-down mode.

The Command Mode FSM also controls the switching process of between the normal mode and the low-power modes (self-refresh/power-down).

The SDRAM controller returns to normal mode from self-refresh mode when a read / write access occurs. If a read / write access occurs while the SDRAM controller is entering self-refresh mode, the self-refresh entry process will be interrupted, and the SDRAM controller remains in normal mode after the read / write access completed.

Figure 38-34. Process for self-refresh entry and exit

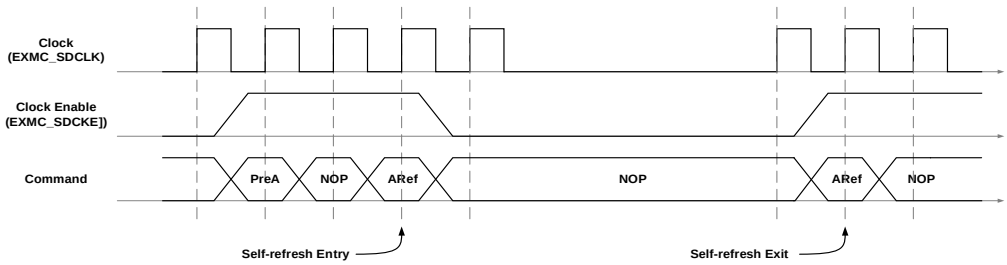

If an auto-refresh request occurs when the SDRAM controller is in power-down mode, the SDRAM controller returns to normal mode, issues the Precharge all and Auto-Refresh

command sequence, and enters power-down mode again automatically.

Figure 38-35. Process for power-down entry and exit

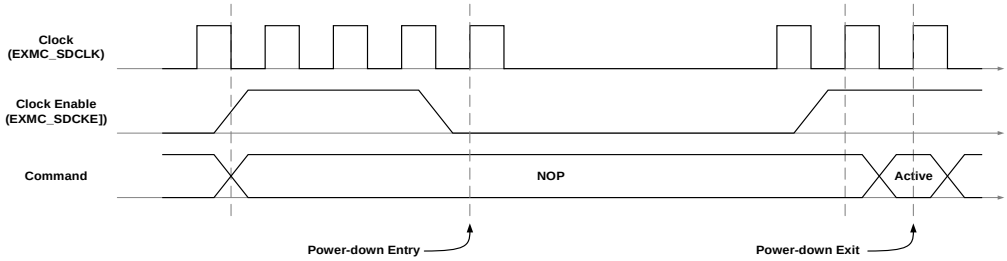

Status and interrupt

The not ready status NRDY bit in EXMC_SDSTAT register specifies whether the SDRAM controller is ready for a new command, this bit is cleared immediately after the command in the SDRAMC's internal register is sent.

Device0 and Device1 status bits STA0 and STA1 in EXMC_SDSTAT register defines the status of SDRAM deivce0 and device1 respectively, 0b00 represents normal mode, 0b01 indicates that the corresponding SDRAM devices is in self-refresh mode, and 0b10 signifies the power-down mode.

If a new refresh request occurs while the previous refresh command has not been served yet, a refresh error flag (REIF) is raised in EXMC_SDSTAT register, and interrupt is generated if REIE is set, refresh error flag is cleared by setting REC bit in EXMC_SDARI register.

38.4. Register definition

EXMC base address: 0x5200 4000

38.4.1. NOR/PSRAM controller registers

The peripheral registers have to be accessed by words (32-bit).

SRAM/NOR flash control registers (EXMC_SNCTLx) (x=0, 1, 2, 3)

Address offset: 0x00 + 8 * x, (x = 0, 1, 2, and 3)

Reset value: 0x0000 30DA

This register has to be accessed by word (32-bit)

31	30	29	28	27	26	25	24	23	22	21	20	19	18	17	16
Reserved						BKREMAP[1:0]		Reserved			CCK	SYNCWR	CPS[2:0]		
						rw					rw	rw	rw		

15	14	13	12	11	10	9	8	7	6	5	4	3	2	1	0
ASYNCWTEN	EXMODEN	NRWTEN	WEN	NRWTCFG	Reserved	NRWTPOL	SBRSTEN	Reserved	NREN	NRW[1:0]		NRTP[1:0]		NRMUX	NRBKEN
rw	rw	rw	rw	rw		rw	rw		rw	rw		rw		rw	rw

Bits	Fields	Descriptions
31:26	Reserved	Must be kept at reset value.
25:24	BKREMAP[1:0]	Bank remap 00: Default mapping 01: NOR/PSRAM bank and SDRAM device 0 swapped 10: Reserved 11: Reserved **Note:** The BKREMAP bits are only present in EXMC_SNCTLR0 register, and thess bits position in EXMC_SNCTLx (x = 1, 2, 3) registers are mearningless.
23:21	Reserved	Must be kept at reset value.
20	CCK	Consecutive clock 0: EXMC_CLK is generated only during synchronous access. 1: EXMC_CLK is generated unconditionally. **Note**: Consecutive clock (CCK) bit is only present in EXMC_SNCTLR0 register, and this bit position in EXMC_SNCTLx (x = 1, 2, 3) registers is mearningless. When this bit is set, only CKDIV[3:0] bits in EXMC_SNTCFG0 can effect EXMC_CLK output.
19	SYNCWR	Synchronous write 0: Asynchronous write

		1: Synchronous write
18:16	CPS[2:0]	CRAM page size 000: Automatic burst split on page boundary crossing 001: 128 bytes 010: 256 bytes 011: 512 bytes 100: 1024 bytes Others: Reserved
15	ASYNCWTEN	Asynchronous wait enable 0: Disable the asynchronous wait function 1: Enable the asynchronous wait function
14	EXMODEN	Extended mode enable 0: Disable extended mode 1: Enable extended mode
13	NRWTEN	NWAIT signal enable For flash memory access in burst mode, this bit enables/disables wait-state insertion to the NWAIT signal. 0: Disable NWAIT signal 1: Enable NWAIT signal
12	WEN	Write enable 0: Disable write in the bank by the EXMC, otherwise an AXI error is reported 1: Enable write in the bank by the EXMC (default after reset)
11	NRWTCFG	NWAIT signal configuration, only work in synchronous mode 0: NWAIT signal is active one data cycle before wait state 1: NWAIT signal is active during wait state
10	Reserved	Must be kept at reset value.
9	NRWTPOL	NWAIT signal polarity 0: Low level of NWAIT is active 1: High level of NWAIT is active
8	SBRSTEN	Synchronous burst enable 0: Disable burst access mode 1: Enable burst access mode
7	Reserved	Must be kept at reset value.
6	NREN	NOR Flash access enable 0: Disable NOR Flash access 1: Enable NOR Flash access
5:4	NRW[1:0]	NOR region memory data bus width 00: 8 bits

		01: 16 bits(default after reset) 10: 32 bits 11: Reserved
3:2	NRTP[1:0]	NOR region memory type 00: SRAM, ROM 01: PSRAM (CRAM) 10: NOR Flash 11: Reserved
1	NRMUX	NOR region memory address/data multiplexing 0: Disable address/data multiplexing function 1: Enable address/data multiplexing function
0	NRBKEN	NOR region enable 0: Disable the corresponding memory bank 1: Enable the corresponding memory bank

SRAM/NOR flash timing configuration registers (EXMC_SNTCFGx) (x=0, 1, 2, 3)

Address offset: 0x04 + 8 * x, (x = 0, 1, 2, and 3)

Reset value: 0x0FFF FFFF

This register has to be accessed by word(32-bit)

31	30	29	28	27	26	25	24	23	22	21	20	19	18	17	16
Reserved		ASYNCMOD[1:0]		DLAT[3:0]				CKDIV[3:0]				BUSLAT[3:0]			
		rw		rw				rw				rw			

15	14	13	12	11	10	9	8	7	6	5	4	3	2	1	0
DSET[7:0]								AHLD[3:0]				ASET[3:0]			
rw								rw				rw			

Bits	Fields	Descriptions
31:30	Reserved	Must be kept at reset value.
29:28	ASYNCMOD[1:0]	Asynchronous access mode The bits are valid only when the EXMODEN bit in the EXMC_SNCTLx register is 1. 00: Mode A access 01: Mode B access 10: Mode C access 11: Mode D access
27:24	DLAT[3:0]	Data latency for NOR Flash. Only valid in synchronous access 0x0: Data latency of first burst access is 2 CLK 0x1: Data latency of first burst access is 3 CLK ……

		0xF: Data latency of first burst access is 17 CLK
23:20	CKDIV[3:0]	Synchronous clock divide ratio. This filed is only effect in synchronous mode. 0x0: No EXMC_CLK output 0x1: EXMC_CLK period = 2 * CK_EXMC period …… 0xF: EXMC_CLK period = 16 * CK_EXMC period
19:16	BUSLAT[3:0]	Bus latency The bits are defined in multiplexed read mode in order to avoid bus contention, and the bits represent the minimum time the data bus used to return to a high impedance state. 0x0: Bus latency = 0 * CK_EXMC period 0x1: Bus latency = 1 * CK_EXMC period …… 0xF: Bus latency = 15 * CK_EXMC period
15:8	DSET[7:0]	Data setup time This field is meaningful only in asynchronous access. 0x00: Reserved 0x01: Data setup time = 1 * CK_EXMC period …… 0xFF: Data setup time = 255 * CK_EXMC period
7:4	AHLD[3:0]	Address hold time This field is used to set the time of address hold phase, which only used in mode D and multiplexed mode. 0x0: Reserved 0x1: Address hold time = 1 * CK_EXMC …… 0xF: Address hold time = 15 * CK_EXMC
3:0	ASET[3:0]	Address setup time This field is used to set the time of address setup phase. **Note:** meaningful only in asynchronous access of SRAM,ROM,NOR Flash 0x0: Address setup time = 0 * CK_EXMC …… 0xF: Address setup time = 15 * CK_EXMC

SRAM/NOR flash write timing configuration registers (EXMC_SNWTCFGx) (x=0, 1, 2, 3)

Address offset: 0x104 + 8 * x, (x = 0, 1, 2, and 3)
Reset value: 0x0FFF FFFF

This register is meaningful only when the EXMODEN bit in EXMC_SNCTLx is set to 1.

This register has to be accessed by word(32-bit)

31	30	29	28	27	26	25	24	23	22	21	20	19	18	17	16
Reserved		WASYNMOD[1:0]		Reserved								WBUSLAT[3:0]			
		rw										rw			

15	14	13	12	11	10	9	8	7	6	5	4	3	2	1	0
WDSET[7:0]								WAHLD[3:0]				WASET[3:0]			
rw								rw				rw			

Bits	Fields	Descriptions
31:30	Reserved	Must be kept at reset value.
29:28	WASYNCMOD[1:0]	Asynchronous access mode The bits are valid only when the EXMODEN bit in the EXMC_SNCTLx register is 1. 00: Mode A access 01: Mode B access 10: Mode C access 11: Mode D access
27:20	Reserved	Must be kept at reset value.
19:16	WBUSLAT[3:0]	Bus latency Bus latency added at the end of each write transaction to match with the minimum time between consecutive transactions. 0x0: Bus latency = 0 * CK_EXMC period 0x1: Bus latency = 1 * CK_EXMC period …… 0xF: Bus latency = 15 * CK_EXMC period
15:8	WDSET[7:0]	Data setup time This field is meaningful only in asynchronous access. 0x00: Reserved 0x01: Data setup time = 1 * CK_EXMC period …… 0xFF: Data setup time = 255 * CK_EXMC period
7:4	WAHLD[3:0]	Address hold time This field is used to set the time of address hold phase, which only used in mode D and multiplexed mode. 0x0: Reserved 0x1: Address hold time = 1 * CK_EXMC …… 0xF: Address hold time = 15 * CK_EXMC
3:0	WASET[3:0]	Address setup time This field is used to set the time of address setup phase.

Note: Meaningful only in asynchronous access of SRAM,ROM,NOR Flash

0x0: Address setup time = 0 * CK_EXMC

0x1: Address setup time = 1 * CK_EXMC

……

0xF: Address setup time = 15 * CK_EXMC

38.4.2. NAND flash controller registers

NAND flash control registers (EXMC_NCTL)

Address offset: 0x80

Reset value: 0x0000 0000

This register has to be accessed by word(32-bit)

31	30	29	28	27	26	25	24	23	22	21	20	19	18	17	16
Reserved												ECCSZ[2:0]			ART[3]
													rw		rw

15	14	13	12	11	10	9	8	7	6	5	4	3	2	1	0
ATR[2:0]			CTR[3:0]				Reserved		ECCEN	NDW[1:0]		Reserved	NDBKEN	NDWTEN	Reserved
	rw			rw					rw	rw			rw	rw	

Bits	Fields	Descriptions
31:20	Reserved	Must be kept at reset value.
19:17	ECCSZ[2:0]	ECC size 000: 256 bytes 001: 512 bytes 010: 1024 bytes 011: 2048 bytes 100: 4096 bytes 101: 8192 bytes
16:13	ATR[3:0]	ALE to RE delay 0x0: ALE to RE delay = 1 * CK_EXMC …… 0xF: ALE to RE delay = 16 * CK_EXMC
12:9	CTR[3:0]	CLE to RE delay 0x0: CLE to RE delay = 1 * CK_EXMC 0x1: CLE to RE delay = 2 * CK_EXMC …… 0xF: CLE to RE delay = 16 * CK_EXMC
8:7	Reserved	Must be kept at reset value.
6	ECCEN	ECC enable

		0: Disable ECC, and reset EXMC_NECC 1: Enable ECC
5:4	NDW[1:0]	NAND bank memory data bus width 00: 8 bits 01: 16 bits Others: Reserved
3	Reserved	Must be kept at reset value.
2	NDBKEN	NAND bank enable 0: Disable corresponding memory bank 1: Enable corresponding memory bank
1	NDWTEN	Wait function enable 0: Disable wait function 1: Enable wait function
0	Reserved	Must be kept at reset value.

NAND flash interrupt enable registers (EXMC_NINTEN)

Address offset: 0x84

Reset value: 0x0000 0042

This register has to be accessed by word(32-bit)

31	30	29	28	27	26	25	24	23	22	21	20	19	18	17	16
Reserved															

15	14	13	12	11	10	9	8	7	6	5	4	3	2	1	0
Reserved									FFEPT	INTFEN	INTHEN	INTREN	INTFS	INTHS	INTRS
									rw	rw	rw	rw	rw	rw	rw

Bits	Fields	Descriptions
31:7	Reserved	Must be kept at reset value.
6	FFEPT	FIFO empty flag 0: FIFO is not empty. 1: FIFO is empty.
5	INTFEN	Interrupt falling edge detection enable 0: Disable interrupt falling edge detection 1: Enable interrupt falling edge detection
4	INTHEN	Interrupt high-level detection enable 0: Disable interrupt high-level detection 1: Enable interrupt high-level detection
3	INTREN	Interrupt rising edge detection enable bit

		0: Disable interrupt rising edge detection 1: Enable interrupt rising edge detection
2	INTFS	Interrupt falling edge status 0: Not detect interrupt falling edge 1: Detect interrupt falling edge
1	INTHS	Interrupt high-level status 0: Not detect interrupt high-level 1: Detect interrupt high-level
0	INTRS	Interrupt rising edge status 0: Not detect interrupt rising edge 1: Detect interrupt rising edge

NAND flash common space timing configuration registers (EXMC_NCTCFG)

Address offset: 0x88

Reset value: 0xFFFF FFFF

These operations applicable to common memory space for NAND Flash.

This register has to be accessed by word(32-bit)

31	30	29	28	27	26	25	24	23	22	21	20	19	18	17	16
COMHIZ[7:0]								COMHLD[7:0]							
rw								rw							

15	14	13	12	11	10	9	8	7	6	5	4	3	2	1	0
COMWAIT[7:0]								COMSET[7:0]							
rw								rw							

Bits	Fields	Descriptions
31:24	COMHIZ[7:0]	Common memory data bus HIZ time The bits are defined as time of bus keep high impedance state after writing the data. 0x00: COMHIZ = 1 * CK_EXMC …… 0xFE: COMHIZ = 255 * CK_EXMC 0xFF: Reserved
23:16	COMHLD[7:0]	Common memory hold time After sending the address, the bits are defined as the address hold time. In write operation, they are also defined as the data signal hold time. 0x00: Reserved 0x01: COMHLD = 1 * CK_EXMC …… 0xFE: COMHLD = 254 * CK_EXMC

		0xFF: Reserved
15:8	COMWAIT[7:0]	Common memory wait time Define the minimum time to maintain command 0x00: Reserved 0x01: COMWAIT = 2 * CK_EXMC (+NWAIT active cycles) …… 0xFE: COMWAIT = 255 * CK_EXMC (+NWAIT active cycles) 0xFF: Reserved
7:0	COMSET[7:0]	Common memory setup time Define the time to build address before sending command 0x00: COMSET = 1 * CK_EXMC …… 0xFE: COMSET = 255 * CK_EXMC 0xFF: Reserved

NAND flash attribute space timing configuration registers (EXMC_NATCFG)

Address offset: 0x8C

Reset value: 0xFFFF FFFF

It is used for 8-bit accesses to the attribute memory space of the NAND Flash for the last address write access if another timing must be applied.

This register has to be accessed by word(32-bit)

31	30	29	28	27	26	25	24	23	22	21	20	19	18	17	16
ATTHIZ[7:0]								ATTHLD[7:0]							
rw								rw							

15	14	13	12	11	10	9	8	7	6	5	4	3	2	1	0
ATTWAIT[7:0]								ATTSET[7:0]							
rw								rw							

Bits	Fields	Descriptions
31:24	ATTHIZ[7:0]	Attribute memory data bus HIZ time The bits are defined as time of bus keep high impedance state after writing the data. 0x00: ATTHIZ = 0 * CK_EXMC …... 0xFE: ATTHIZ = 254 * CK_EXMC 0xFF: Reserved
23:16	ATTHLD[7:0]	Attribute memory hold time After sending the address, the bits are defined as the address hold time. In write operation, they are also defined as the data signal hold time. 0x00: Reserved

		0x01: ATTHLD = 1 * CK_EXMC …… 0xFE: ATTHLD = 254 * CK_EXMC 0xFF: Reserved
15:8	ATTWAIT[7:0]	Attribute memory wait time Define the minimum time to maintain command 0x00: Reserved 0x01: ATTWAIT = 2 * CK_EXMC (+NWAIT active cycles) …… 0xFE: ATTWAIT = 255 * CK_EXMC (+NWAIT active cycles) 0xFF: ATTWAIT = Reserved
7:0	ATTSET[7:0]	Attribute memory setup time Define the time to build address before sending command 0x00: ATTSET = 1 * CK_EXMC …… 0xFE: ATTSET = 255 * CK_EXMC 0xFF: Reserved

NAND flash ECC registers (EXMC_NECC)

Address offset: 0x94

Reset value: 0x0000 0000

This register has to be accessed by word (32-bit)

31	30	29	28	27	26	25	24	23	22	21	20	19	18	17	16
ECC[31:16]															
r															

15	14	13	12	11	10	9	8	7	6	5	4	3	2	1	0
ECC[15:0]															
r															

Bits	Fields	Descriptions
31:0	ECC[31:0]	ECC result

ECCSZ[2:0]	NAND Flash page size	ECC bits
0b000	256	ECC[21:0]
0b001	512	ECC[23:0]
0b010	1024	ECC[25:0]
0b011	2048	ECC[27:0]
0b100	4096	ECC[29:0]
0b101	8192	ECC[31:0]

38.4.3. SDRAM controller registers

SDRAM control registers (EXMC_SDCTLx) (x=0, 1)

Address offset: 0x140+4*x, (x = 0, 1)

Reset value: 0x0000 02D0

This register has to be accessed by word(32-bit)

31	30	29	28	27	26	25	24	23	22	21	20	19	18	17	16
Reserved															

15	14	13	12	11	10	9	8	7	6	5	4	3	2	1	0
SDCLK[2]	PIPED[1:0]		BRSTRD	SDCLK[1:0]		WPEN	CL[1:0]		NBK	SDW[1:0]		RAW[1:0]		CAW[1:0]	
rw	rw		rw	rw		rw	rw		rw	rw		rw		rw	

Bits	Fields	Descriptions
31:16	Reserved	Forced by hardware to 0.
15	SDCLK[2]	Refer to SDCLK[1:0] description.
14:13	PIPED[1:0]	Pipeline delay These bits specify the delay for reading data after CAS latency in CK_EXMC clock cycles. 00: 0 CK_EXMC clock cycle delay 01: 1 CK_EXMC clock cycle delay 10: 2 CK_EXMC clock cycle delay 11: reserved **Note:** The corresponding bits in the EXMC_SDCTL1 register are reserved.
12	BRSTRD	Burst read When this bit is set, The SDRAM controller anticipates the next read commands during the CAS latency and stores data in the Read FIFO. 0: burst read disabled 1: burst read enabled **Note:** The corresponding bits in the EXMC_SDCTL1 register are reserved.
11:10	SDCLK[1:0]	SDRAM clock configuration These bits specifies the SDRAM clock period for both SDRAM devices. The memory clock should be disabled before change, and the SDRAM memory must be re-initialized after this configuration is changed. 000: SDCLK memory clock disabled 001: Reserved 010: SDCLK memory period = 2 x CK_EXMC periods 011: SDCLK memory period = 3 x CK_EXMC periods 110: SDCLK memory period = 4 x CK_EXMC periods 111: SDCLK memory period = 5 x CK_EXMC periods

		Others: Reserved **Note:** The corresponding bits in the EXMC_SDCTL1 register are reserved. The SDCLK[2] bit is not contiguous, which is located in bit 15.
9	WPEN	Write protection enable This bit enables the write protection function. 0: Disable write protection, write accesses allowed 1: Enable write protection, write accesses ignored
8:7	CL[1:0]	CAS Latency This bits sets specifies SDRAM CAS latency in SDRAM memory clock cycle unit 00: reserved, do not use. 01: 1 cycle 10: 2 cycles 11: 3 cycles
6	NBK	Number of banks This bit specifies the number of internal banks. 0: 2 internal Banks 1: 4 internal Banks
5:4	SDW[1:0]	SDRAM data bus width. These bits specify the SDRAM memory data width. 00: 8 bits 01: 16 bits 10: 32 bits 11: reserved
3:2	RAW[1:0]	Row address bit width These bits specify the bit width of a row address. 00: 11 bit 01: 12 bits 10: 13 bits 11: reserved
1:0	CAW[1:0]	Column address bit width These bits specify the bit width of column address. 00: 8 bits 01: 9 bits 10: 10 bits 11: 11 bits.

SDRAM timing configuration registers (EXMC_SDTCFGx) (x=0, 1)

Address offset: 0x148+4*x, (x = 0, 1)

Reset value: 0x0FFF FFFF

This register has to be accessed by word(32-bit)

31	30	29	28	27	26	25	24	23	22	21	20	19	18	17	16
Reserved				RCD[3:0]				RPD[3:0]				WRD[3:0]			
				rw				rw				rw			

15	14	13	12	11	10	9	8	7	6	5	4	3	2	1	0
ARFD[3:0]				RASD[3:0]				XSRD[3:0]				LMRD[3:0]			
rw				rw				rw				rw			

Bits	Fields	Descriptions
31:28	Reserved	Forced by hardware to 0.
27:24	RCD[3:0]	Row to column delay These bits specify the delay between an Activate command and a Read / write command in SDRAM memory clock cycle unit. 0x0: 1 cycle. 0x1: 2 cycles .... 0xF: 16 cycles
23:20	RPD[3:0]	Row precharge delay These bits specify the delay between a Precharge command and the next command in SDRAM memory clock cycle unit. 0x0: 1 cycle 0x1: 2 cycles .... 0xF: 16 cycles **Note:** The corresponding bits in the EXMC_SDTCFG1 register are reserved. If two SDRAM memories are used, the RPD must be programmed with the timings of the slower one.
19:16	WRD[3:0]	Write recovery delay These bits specify the delay between a Write and a Precharge command in SDRAM memory clock cycle unit. 0x0: 1 cycle 0x1: 2 cycles ..... 0xF: 16 cycles **Note:** The corresponding bits in the EXMC_SDTCFG1 register are reserved. If two SDRAM memories are used, the WRD must be programmed with the timings of the slower one.
15:12	ARFD[3:0]	Auto refresh delay These bits specify the delay between two consecutive Refresh commands, the delay between two Activate commands, as well as the delay between the Refresh command and the Activate command in SDRAM memory clock cycle unit.

Bits	Fields	Descriptions
		0x0: 1 cycle 0x1: 2 cycles .... 0xF: 16 cycles **Note:** The corresponding bits in the EXMC_SDTCFG1 register are reserved. If two SDRAM memories are used, the ARFD must be programmed with the timings of the slower one.
11:8	RASD[3:0]	Row address select delay These bits specify the delay between an Activate command and a Precharge command in SDRAM memory clock cycle unit. The minimum delay between two successive Self-refresh commands is also specified by these bits. 0x0: 1 cycle 0x1: 2 cycles ..... 0xF: 16 cycles
7:4	XSRD[3:0]	Exit Self-refresh delay These bits specify the delay from a Self-refresh command to an Activate command in SDRAM memory clock cycle unit. 0x0: 1 cycle 0x1: 2 cycles …… 0xF: 16 cycles
3:0	LMRD[3:0]	Load Mode Register Delay These bits specify the delay between a Load Mode Register command and a Refresh or Active command in SDRAM memory clock cycle unit. 0x0: 1 cycle 0x1: 2 cycles ..... 0xF: 16 cycles

SDRAM command register (EXMC_SDCMD)

Address offset: 0x150

Reset value: 0x0000 0000

This register has to be accessed by word(32-bit)

31	30	29	28	27	26	25	24	23	22	21	20	19	18	17	16
Reserved										MRC[12:7]					
												rw			

15	14	13	12	11	10	9	8	7	6	5	4	3	2	1	0
MRC[6:0]							NARF[3:0]				DS0	DS1	CMD[2:0]		
			rw					rw			rw	rw		rw	

Bits	Fields	Descriptions
31:22	Reserved	Forced by hardware to 0.
21:9	MRC[12:0]	Mode register content These bits specify the SDRAM Mode Register content which will be programmed when CMD = '100'.
8:5	NARF[3:0]	Number of successive Auto-refresh These bits specify how many successive Auto-refresh cycles will be send when CMD = '011'. 0x0: 1 Auto-refresh cycle 0x1: 2 Auto-refresh cycles .... 0xE: 15 Auto-refresh cycles 0xF: Reserved
4	DS0	Device select 0 This bit indicates whether the SDRAM Device0 is selected or not. 0: SDRAM Device0 is not selected 1: SDRAM Device0 is selected
3	DS1	Device select 1 This bit indicates whether the SDRAM Device1 is selected or not. 0: SDRAM Device1 is not selected 1: SDRAM Device1 is selected
2:0	CMD[2:0]	Command These bits specify the commands, which are issued to the SDRAM device. 000: Normal operation command 001: Clock enable command 010: Precharge All command 011: Auto-refresh command 100: Load Mode Register command 101: Self-refresh command 110: Power-down entry command 111: Reserved **Note:** At least one command device select bit (DS1 or DS0) must be set, when a command is issued. If both devices are used, the commands must be issued to the two devices by setting the DS1and DS0 bits at the same time.

SDRAM auto-refresh interval register (EXMC_SDARI)

Address offset: 0x154

Reset value: 0x0000 0000

This register has to be accessed by word(32-bit)

31	30	29	28	27	26	25	24	23	22	21	20	19	18	17	16
Reserved															

15	14	13	12	11	10	9	8	7	6	5	4	3	2	1	0
Reserved	REIE	ARINTV[12:0]													REC
	rw							rw							w

Bits	Fields	Descriptions
31:15	Reserved	Forced by hardware to 0.
14	REIE	Refresh error interrupt Enable 0: Interrupt is disabled 1: An Interrupt is generated if REIF bit of the Status Register is set
13:1	ARINTV[12:0]	Auto-Refresh Interval This bit field specifies the interval of two successive auto-refresh commands in memory clock cycle unit. ARFITV = (SDRAM refresh period / Number of rows) - 20
0	REC	Refresh error flag clear The Refresh Error Flag (REIF) in the Status Register will be cleared when this bit is set. 0: no effect 1: Clear the Refresh Error flag

SDRAM status register (EXMC_SDSTAT)

Address offset: 0x158

Reset value: 0x0000 0000

This register has to be accessed by word(32-bit)

31	30	29	28	27	26	25	24	23	22	21	20	19	18	17	16
Reserved															

15	14	13	12	11	10	9	8	7	6	5	4	3	2	1	0
Reserved										NRDY	STA1[1:0]		STA0[1:0]		REIF
										r	r		r		r

Bits	Fields	Descriptions
31:6	Reserved	Forced by hardware to 0.
5	NRDY	Not Ready status This bit specifies whether the SDRAM controller is ready for a new command 0: SDRAM Controller is ready for a new command 1: SDRAM Controller is not ready for a new command

4:3	STA1[1:0]	Device1 status This bit defines the Status of SDRAM Device1. 00: Normal status 01: Self-refresh status 10: Power-down status
2:1	STA0[1:0]	Device 0 status This bit defines the Status of SDRAM Device 0. 00: Normal status 01: Self-refresh status 10: Power-down status
0	REIF	Refresh error interrupt flag 0: No refresh error 1: A refresh error occurred. An interrupt is generated when REIE = 1.

SDRAM read sample control register (EXMC_SDRSCTL)

Address offset: 0x180

Reset value: 0x0000 0000

This register has to be accessed by word(32-bit)

31	30	29	28	27	26	25	24	23	22	21	20	19	18	17	16
Reserved															

15	14	13	12	11	10	9	8	7	6	5	4	3	2	1	0
Reserved								SDSC[3:0]				Reserved		SSCR	RSEN
								rw						rw	rw

Bits	Fields	Descriptions
31:8	Reserved	Forced by hardware to 0.
7:4	SDSC[3:0]	Select the delayed sample clock of read data 0x0: Select the clock after 0 delay cell 0x1: Select the clock after 1 delay cell …… 0xF: Select the clock after 15 delay cell
3:2	Reserved	Forced by hardware to 0.
1	SSCR	Select sample cycle of read data 0: add 0 extra CK_EXMC cycle to the read data sample clock besides the delay chain 1: add 1 extra CK_EXMC cycle to the read data sample clock besides the delay chain
0	RSEN	Read sample enable

0: Read sample disabled

1: Read sample enabled

39. VREF

39.1. Overview

A precision internal reference circuit is inside. The internal voltage reference unit is used to provide voltage reference for ADC / DAC, or used by off-chip circuit connecting to VREFP pin.

39.2. Characteristics

- Stable voltage, and product calibrated.
- Connects to VREFP pin to source off-chip circuits.
- 1.5V, 1.8V, 2.048V or 2.5V configurable reference voltage output.

39.3. Function overview

The VREF is enabled by set the VREFEN bit in VREF_CS register, and the VREF output can be configured to be either 1.5V, 1.8V, 2.048V, or 2.5V by programming the VREFS[1:0] bits. When VREF is enabled and the HIPM bit is reset, the internal voltage reference can be connected to VREFP pin. When VREF is disabled and the HIPM bit is set, off-chip voltage reference can be injected to VREFP pin to source ADC / DAC. If there is no VREFP pin (refer to datasheet), the VREFP is connected to VDDA and the VREFEN bit must keep 0.

When using precision internal voltage reference, and a bypass capacitor about 0.1uF (or 0.1uF and 10nF connected in parallel) which is recommended to ground is required.

Figure 39-1.Precision reference connection

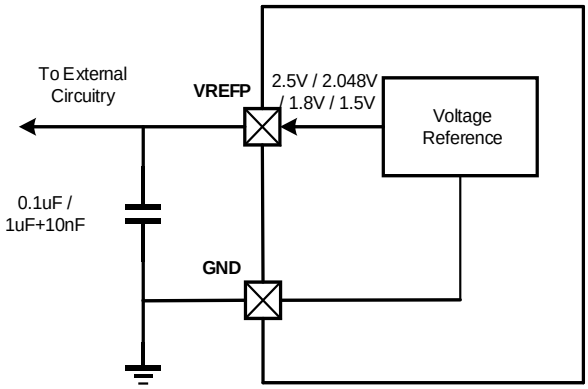

As shown in *Table 39-1. VREF modes*, the precision internal reference voltage unit can work in four kinds of mode by programming the VREFEN and HIPM bits in the VREF_CS register.

Table 39-1. VREF modes

VREFEN	HIPM	Mode
0	0	VREF disabled,

VREFEN	HIPM	Mode
		VREFP pin pulled-down to VSSA.
0	1	External voltage reference mode (default): VREF disabled. off-chip reference voltage injected from VREFP pin.
1	0	Internal voltage reference mode: VREF enabled. VREFP pin inside connected to VREF output.
1	1	Hold mode: VREF disabled. VREFP pin floating. The voltage is maintained by the external capacitor. VREFRDY detection disabled and VREFRDY bit keeps last state.

When VREF is configured in internal voltage reference mode by setting VREFEN bit and reset HIPM bit in the VREF_CS register, the user must wait before VREFRDY bit is set, indicating that the VREF output has attained the set value.

39.4. Register definition

VREF base address: 0x5800 3C00

39.4.1. Control and status register (VREF_CS)

Address offset: 0x00

Reset value: 0x0000 0002

This register can be accessed by half-word (16-bit) or word (32-bit).

31	30	29	28	27	26	25	24	23	22	21	20	19	18	17	16
Reserved															

15	14	13	12	11	10	9	8	7	6	5	4	3	2	1	0
Reserved										VREFS[1:0]		VREFRDY	Reserved	HIPM	VREFEN
										rw		r		rw	rw

Bits	Fields	Descriptions
31:6	Reserved	Must be kept at reset value.
5:4	VREFS[1:0]	Voltage reference select These bits set the value of voltage reference output by the VREF. 00: The voltage reference is around 2.5 V 01: The voltage reference is around 2.048 V 10: The voltage reference is around 1.8 V 11: The voltage reference is around 1.5 V This bit can be modified only when the VREF is disabled (VREFEN = 0).
3	VREFRDY	VREF ready 0: The output of the VREF does not attain the set value 1: The output of the VREF attains the set value
2	Reserved	Must be kept at reset value.
1	HIPM	High impedance state 0: The VREFP pin is inside connected to the VREF output 1: The VREFP pin is set to high impedance state
0	VREFEN	VREF enable 0: VREF is disabled 1: VREF is enabled

39.4.2. Calibration register (VREF_CALIB)

Address offset: 0x04

Reset value: 0x0000 00XX

This register can be accessed by half-word (16-bit) or word (32-bit).

31	30	29	28	27	26	25	24	23	22	21	20	19	18	17	16
Reserved															

15	14	13	12	11	10	9	8	7	6	5	4	3	2	1	0
Reserved										VREFCAL[5:0]					
												rw			

Bits	Fields	Descriptions
31:6	Reserved	Must be kept at reset value.
5:0	VREFCAL[5:0]	VREF calibration After reset, these bits will be initialized to the calibration value saved in the Flash memory during the course of production test. Writing to these bits can adjust the output of the VREF. **Note:** If the user performs the calibration procedure, the VREF calibration must increase progressively from 0x00 to 0x3F.

40. Low power digital temperature sensor (LPDTS)

40.1. Overview

Low power digital tempearature sensor(LPDTS) is used to transmit square wave,which is converted by temperature and the frequency is proportional to the absolute temperature. The frequency measurement is based on the PCLK or the LXTAL clock.

40.2. Characteristics

- The trigger source of measurement can be set to software or hardware.
- Programmable sampling time.
- Temperature window watchdog.
- The interrupt can be generated when the temperature is below a low threshold or above a high threshold and at the end of measurement.
- The generation of asynchronous wakeup signal indicates that the measurement result is higher or lower than the specified threshold when the LXTAL is selected as reference clock.

40.3. Block diagram

Figure 40-1. LPDTS block diagram shows the LPDTS block diagram.

Figure 40-1. LPDTS block diagram

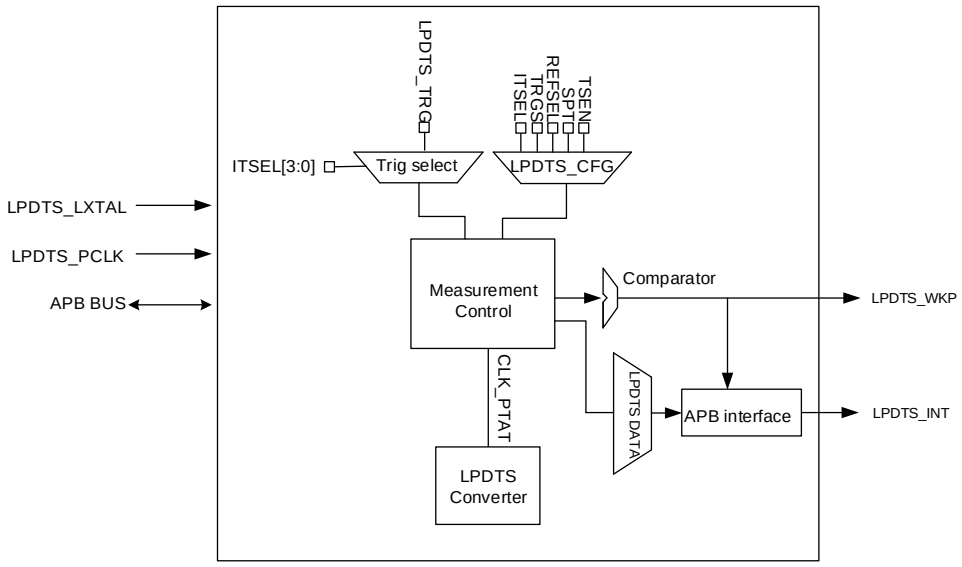

40.4. Function overview

40.4.1. LPDTS internal signals

Table 40-1. LPDTS signals

Signal name	Type	Description
LPDTS_LXTAL	input	LXTAL clock
LPDTS_PCLK	input	APB clock
LPDTS_INT	output	The interrupt of intenal temperature sensor
LPDTS_WKP	output	The wakeup of intenal temperature sensor

40.4.2. Operating modes

The REFSEL bit in LPDTS_CFG can be set to selected multiple operation modes.

- PCLK mode (REFSEL = 0)

The register can be wrote or read by software. The REFSEL bit is set to 0 to select the PCLK as reference clock.

- PCLK and LXTAL mode (REFSEL = 1)

The register can be wrote or read by software. The REFSEL bit is set to 1 to select the LXTAL as reference clock.

- LXTAL mode (REFSEL = 1 and PCLK OFF)

The temperature sensor registers cannot be accessed. The LXTAL is selected as reference clock. This mode can use hardware triggers to exit the Deep-sleep mode.

40.4.3. Temperature measurement principles

A signal is output, which FM(T) frequency (typically 641 kHz) is related to temperature, by the analog part of temperature sensor. Two counters are embedded in the temperature sensor block, which makes the counting mode relevant to the reference clock frequency. The counting result is stored in the LPDTS_DATA register.

- When the reference clock is PCLK, the measurement method is to sample one or multiple FM(T) cycles and count at the rising edge and falling edge of PCLK.
- When the reference clock is LXTAL, the measurement method is to sample one or multiple LXTAL cycles and count at the rising edge and falling edge of FM(T).

Figure 40-2. Method for different REF_CLK

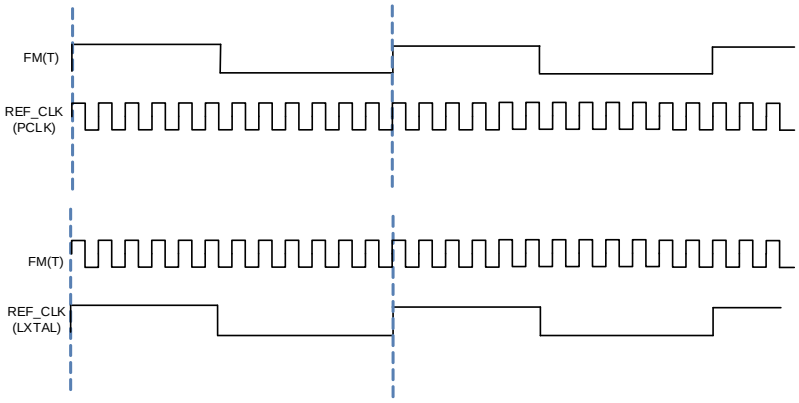

The Temperature calculation formula When PCLK is used:

$$T=T0+((2\times F_{PCLK}/COVAL)\times SPT-100\times FREQ)/RF_CF \quad (40\text{-}1)$$

The Temperature calculation formula When LXTAL is used:

$$T=T0+(((F_{LXTAL}\times COVAL)/(2\times SPT))-(100\times FREQ))/RF_CF \quad (40\text{-}2)$$

where:

- T0 is equal to 25 °C.
- COVAL is the value of the counter output value for temperature sensor which measured and stored in the LPDTS_DATA register.
- SPT is Sampling time for temperature sensor
- FREQ is engineering value of the frequency measured at T0 for temperature sensor which measured and stored in the LPDTS_SDATA register. It is expressed in hundreds of Hertz.
- RF_CF is the engineering value of the ramp coefficient for the temperature sensor.

40.4.4. Sampling time

Increasing the sampling period helps to improve the measurement accuracy. It is most effective when the reference frequency is set close to the sampling frequency.

The default value of the sampling time should be set as one REF_CLK cycle or one FM(T) cycle, and the corresponding modes are LXTAL mode and PCLK mode.

The sampling time is configured through SPT bits in LPDTS_CFG register (see ***Table 40-2. Sampling time configuration***).

Table 40-2. Sampling time configuration

SPT[3:0]	LXTAL or FM(T) clock cycle(s)
0000	1
0001	1
0010	2

SPT[3:0]	LXTAL or FM(T) clock cycle(s)
0011	3
0100	4
0101	5
0110	6
0111	7
1000	8
1001	9
1010	10
1011	11
1100	12
1101	13
1110	14
1111	15

40.4.5. Trigger input

The trigger source can be selected to trigger the temperature measurement through ITSEL[3:0] bits in LPDTS_CFG.

- Software trigger

  The software trigger is selected when ITSEL[3:0] is set to '0000' in LPDTS_CFG.
  - Check if TSRF is set to 1. When TSRF is set, start the temperature measurement by setting TRGS bit in LPDTS_CFG register. otherwise, ignore this step.
  - After completion of measurement, if the TRGS bit remains at 1, the measurement will restart when the TSRF flag changes to 1.
- Hardware Trigger

  The temperature sensor can only capture a hardware trigger rising edge when TSRF bit is set, otherwise the trigger is ignored.

Table 40-3. Trigger configuration

Name	ITSEL[3:0]				Comment
NA	0	0	0	0	No hardware trigger
0001	0	0	0	1	reserved
0010	0	0	1	0	
0011	0	0	1	1	
0100	0	1	0	0	LPDTS_TRG
0101	0	1	0	1	reserved
0110	0	1	1	0	
0111	0	1	1	1	
1000	1	0	0	0	
1001	1	0	0	1	
1010	1	0	1	0	
1011	1	0	1	1	

Name	ITSEL[3:0]				Comment
1100	1	1	0	0	
1101	1	1	0	1	
1110	1	1	1	0	
1111	1	1	1	1	

Note: The LPDTS_TRG is the output of the TRIGSEL module. The INSELx[7:0] of TRIGSEL_LPDTS register in the TRIGSEL module are used to select trigger input souce of LPDTS_TRG trigger input.

40.4.6. On-off control and ready flag

The LPDTS block can be enabled by setting TSEN bit in LPDTS_CFG register. The TSRF flag in the Temperature sensor status register (LPDTS_STAT) indicate that the LPDTS block is ready for temperature measurement: when TSRF bit is set to 1, the measurement can be started. Once a measurement has started, TSRF bit is reset. New measurement can not be initiated at this time. If a new measurement is needed,it is necessary to wait for the completion of the last measurement and set the TSRF bit.

40.4.7. LPDTS low-power modes

Table 40-4. Temperature sensor behavior in low-power modes

Mode	Description
Sleep	LPDTS interrupt can be used to exit from Sleep mode when the LXTAL or PCLK as reference clock.
Deep-sleep	LPDTS interrupt can be used to exit from Deep-sleep mode when the LXTAL as reference clock.

40.4.8. LPDTS interrupts

The LPDTS interrupt line can be connected to the CPU NVIC or to the EXTI controller.

- The interrupt can be generated in two situations:
  - At the end of measurement.
  - The measurement result is higher or lower than a specified threshold.
- There are two kinds of interrupt in LPDTS module.
  - Synchronous interrupt: Three interrupt events can be select via 3 bits in LPDTS_INTEN register.
  - Asynchronous wakeup: Three asynchronous wakeup events can be selected via 3 bits in LPDTS_INTEN register.
- All combination of interrupts are allowed.

Note: Asynchronous wakeup is used only when the LXTAL is selected as reference clock.

The following table shows the interrupt bits and their description.

Table 40-5. Temperature sensor behavior in low-power modes

Interrupt event	Interrupt flag	Enable control bit	Interrupt clear bit	Exit from Sleep mode	Exit from Deep-sleep mode	Synchronous/ Asynchronous
When the measurement is done	EMIF in LPDTS_STAT	EMIE in LPDTS_INTEN	EMIC in LPDTS_INTC	YES	NO	Synchronous on PCLK
When the measurement is lower than the specified threshold	LTIF in LPDTS_STAT	LTIE in LPDTS_INTEN	LTIC in LPDTS_INTC	YES	NO	
When the measurement is higher than the specified threshold	HTIF in LPDTS_STAT	HTIE in LPDTS_INTEN	HTIC in LPDTS_INTC	YES	NO	
When the measurement is done	EMAIF in LPDTS_STAT	EMAIE in LPDTS_INTEN	EMAIC in LPDTS_INTC	YES	YES	Asynchronous
When the measurement is lower than the specified threshold	LTAIF in LPDTS_STAT	LTAIFE in LPDTS_INTEN	LTAIC in LPDTS_INTC	YES	YES	
When the measurement is higher than the specified threshold	HTAIF in LPDTS_STAT	HTAIE in LPDTS_INTEN	HTAIC in LPDTS_INTC	YES	YES	

40.5. Register definition

LPDTS base address: 0x5800 6800

40.5.1. Configuration register (LPDTS_CFG)

Address offset: 0x00
Reset value: 0x0000 0000

This register has to be accessed by word (32-bit).

31	30	29	28	27	26	25	24	23	22	21	20	19	18	17	16
Reserved											REFSEL	SPT[3:0]			
				rw						rw	rw	rw			

15	14	13	12	11	10	9	8	7	6	5	4	3	2	1	0
Reserved				ITSEL[3:0]				Reserved			TRGS	Reserved			TSEN
					rw						rw				rw

Bits	Fields	Descriptions
31:21	Reserved	Must be kept at reset value.
20	REFSEL	Reference clock selection 0: High speed reference clock (PCLK) 1: Low speed reference clock (LXTAL)
19:16	SPT[3:0]	Sampling time These bits allow increasing the sampling time to improve measurement precision.
15:12	Reserved	Must be kept at reset value.
11:8	ITSEL[3:0]	Input trigger selection These bits select which input triggers a temperature measurement.
7:5	Reserved	Must be kept at reset value.
4	TRGS	Trigger selection for frequency measurement 0: No software trigger. 1: Software trigger for a frequency measurement when temperature sensor is ready.
3:1	Reserved	Must be kept at reset value.
0	TSEN	Enable temperature sensor 0: Disable Temperature sensor 1: Enable Temperature sensor

40.5.2. Sensor T0 data register 1 (LPDTS_SDATA)

Address offset: 0x08

System reset value: 0x000X XXXX

This register has to be accessed by word (32-bit).

31	30	29	28	27	26	25	24	23	22	21	20	19	18	17	16
Reserved														VAL[1:0]	
														r	

15	14	13	12	11	10	9	8	7	6	5	4	3	2	1	0
FREQ[15:0]															
r															

Bits	Fields	Descriptions
31:18	Reserved	Must be kept at reset value.
17:16	VAL[1:0]	Engineering value These bits are the value of T0 temperature. 0x00: 25 °C Others: Reserved
15:0	FREQ[15:0]	Frequency value These bits are the value of the frequency measured when the temperature is T0. This value is set by 0.1 kHz step.

40.5.3. Ramp data register (LPDTS_RDATA)

Address offset: 0x10

System reset value: 0xXXXX XXXX

This register has to be accessed by word (32-bit).

31	30	29	28	27	26	25	24	23	22	21	20	19	18	17	16
Reserved															

15	14	13	12	11	10	9	8	7	6	5	4	3	2	1	0
RCVAL[15:0]															
r															

Bits	Fields	Descriptions
31:16	Reserved	Must be kept at reset value.
15:0	RCVAL[15:0]	Ramp coefficient These bits are the value of the ramp coefficient.

This value is set by 1 Hz/°C step.

40.5.4. Interrupt threshold register (LPDTS_IT)

Address offset: 0x14

System reset value: 0x0000 0000

This register has to be accessed by word (32-bit).

31	30	29	28	27	26	25	24	23	22	21	20	19	18	17	16
INTHT[15:0]															
rw															

15	14	13	12	11	10	9	8	7	6	5	4	3	2	1	0
INTLT[15:0]															
rw															

Bits	Fields	Descriptions
31:16	INTHT[15:0]	Interrupt high threshold These bits indicate the highest value than can be reached before the interrupt is generated.
15:0	INTLT[15:0]	Interrupt low threshold These bits indicate the lowest value than can be reached before the interrupt is generated.

40.5.5. Temperature data register (LPDTS_DATA)

Address offset: 0x1C

System reset value: 0x0000 0000

This register contains the number of REF_CLK cycles used to compute the FM(T) frequency.

This register has to be accessed by word (32-bit).

31	30	29	28	27	26	25	24	23	22	21	20	19	18	17	16
Reserved															
r															

15	14	13	12	11	10	9	8	7	6	5	4	3	2	1	0
COVAL[15:0]															
r															

Bits	Fields	Descriptions
31:16	Reserved	Must be kept at reset value.
15:0	COVAL[15:0]	Value of the counter output

40.5.6. Temperature sensor status register (LPDTS_STAT)

Address offset: 0x20

System reset value: 0x0000 0000

This register has to be accessed by word (32-bit).

31	30	29	28	27	26	25	24	23	22	21	20	19	18	17	16
Reserved															

15	14	13	12	11	10	9	8	7	6	5	4	3	2	1	0
TSRF	Reserved								HTAIF	LTAIF	EMAIF	Reserved	HTIF	LTIF	EMIF
r									r	r	r		r	r	r

Bits	Fields	Descriptions
31:16	Reserved	Must be kept at reset value.
15	TSRF	Temperature sensor ready flag 0: Temperature sensor not ready 1: Temperature sensor ready
14:7	Reserved	Must be kept at reset value.
6	HTAIF	High threshold asynchronous interrupt flag Set by hardware when the high threshold is reached and the HTAIE bit is set. Reset by software by setting the HTAIC bit in the LPDTS_INTC register. 0: No high threshold asynchronous interrupt generated 1: High threshold interrupt asynchronous generated
5	LTAIF	Low threshold asynchronous interrupt flag Set by hardware when the low threshold is reached and the LTAIE bit is set. Reset by software by setting the LTAIC bit in the LPDTS_INTC register. 0: No low threshold asynchronous interrupt generated 1: Low threshold asynchronous interrupt generated
4	EMAIF	End of measurement asynchronous interrupt flag Set by hardware when the temperature measure is finished and the EMAIE bit is set. Reset by software by setting the EMAIC bit in the LPDTS_INTC register. 0: No end of measurement asynchronous interrupt generated 1: End of measurement asynchronous interrupt generated
3	Reserved	Must be kept at reset value.
2	HTIF	High threshold interrupt flag Set by hardware when the high threshold is reached and the HTIE bit is set (synchronized on PCLK). Reset by software by setting the HTIC bit in the LPDTS_INTC register.

		0: No high threshold interrupt generated 1: High threshold interrupt generated
1	LTIF	Low threshold interrupt flag Set by hardware when the low threshold is reached and the LTIE bit is set (synchronized on PCLK). Reset by software by setting the LTIC bit in the LPDTS_INTC register. 0: No low threshold interrupt generated 1: Low threshold interrupt generated
0	EMIF	End of measurement interrupt flag Set by hardware when the temperature measure is finished and the EMIE bit is set (synchronized on PCLK). Reset by software by setting the EMIC bit in the LPDTS_INTC register. 0: No end of measurement interrupt generated 1: End of measurement interrupt generated

40.5.7. Interrupt enable register (LPDTS_INTEN)

Address offset: 0x24

System reset value: 0x0000 0000

This register has to be accessed by word (32-bit).

31	30	29	28	27	26	25	24	23	22	21	20	19	18	17	16
Reserved															

15	14	13	12	11	10	9	8	7	6	5	4	3	2	1	0
Reserved									HTAIE	LTAIE	EMAIE	Reserved	HTIE	LTIE	EMIE
									rw	rw	rw		rw	rw	rw

Bits	Fields	Descriptions
31:7	Reserved	Must be kept at reset value.
6	HTAIE	High threshold asynchronous interrupt enable Set and reset by software to enable/disable the high threshold asynchronous interrupt (only when REFSEL = 1). 0: Disable the high threshold asynchronous interrupt 1: Enable the high threshold asynchronous interrupt
5	LTAIE	Low threshold asynchronous interrupt enable Set and reset by software to enable/disable the low threshold asynchronous interrupt (only when REFSEL = 1). 0: Disable the low threshold asynchronous interrupt 1: Enable the low threshold asynchronous interrupt
4	EMAIE	End of measurement asynchronous interrupt enable

		Set and reset by software to enable/disable the end of measurement asynchronous interrupt (only when REFSEL = 1). 0: Disable the end of measurement asynchronous interrupt 1: Enable the end of measurement asynchronous interrupt
3	Reserved	Must be kept at reset value.
2	HTIE	High threshold interrupt enable Set and reset by software to enable/disable the high threshold interrupt which is synchronized on PCLK. 0: Disable the high threshold interrupt 1: Enable the high threshold interrupt
1	LTIE	Low threshold interrupt enable Set and reset by software to enable/disable the low threshold interrupt which is synchronized on PCLK. 0: Disable the low threshold interrupt 1: Enable the low threshold interrupt
0	EMIE	End of measurement interrupt enable Set and reset by software to enable/disable the end of measurement interrupt which is synchronized on PCLK. 0: Disable the end of measurement interrupt 1: Enable the end of measurement interrupt

40.5.8. Interrupt clear flag register (LPDTS_INTC)

Address offset: 0x28

System reset value: 0x0000 0000

This register has to be accessed by word (32-bit).

31	30	29	28	27	26	25	24	23	22	21	20	19	18	17	16
Reserved															

15	14	13	12	11	10	9	8	7	6	5	4	3	2	1	0
Reserved									HTAIC	LTAIC	EMAIC	Reserved	HTIC	LTIC	EMIC
									rc_w1	rc_w1	rc_w1		rc_w1	rc_w1	rc_w1

Bits	Fields	Descriptions
31:7	Reserved	Must be kept at reset value.
6	HTAIC	High threshold asynchronous interrupt clear Write 1 by software to clear the HTAIF flag in the LPDTS_STAT register.
5	LTAIC	Low threshold asynchronous interrupt clear Write 1 by software to clear the LTAIF flag in the LPDTS_STAT register.

4	EMAIC	End of Measure asynchronous interrupt clear Write 1 by software to clear the EMAIF flag of the LPDTS_STAT register.
3	Reserved	Must be kept at reset value.
2	HTIC	High threshold interrupt clear Write 1 by software to clear the HTIF flag in the LPDTS_STAT register.
1	LTIC	Low threshold interrupt clear Write 1 by software to clear the LTIF flag in the LPDTS_STAT register.
0	EMIC	End of measurement interrupt clear Write 1 by software to clear the EMIF flag in the LPDTS_STAT register.

40.5.9. Option register (LPDTS_OP)

Address offset: 0x2C

System reset value: 0x0000 0000

This register has to be accessed by word (32-bit).

31	30	29	28	27	26	25	24	23	22	21	20	19	18	17	16
OP[31:16]															
rw															

15	14	13	12	11	10	9	8	7	6	5	4	3	2	1	0
OP [15:0]															
rw															

Bits	Fields	Descriptions
31:0	OP [31:0]	general purpose option bits

41. Encoder Divided-Output controller (EDOUT)

41.1. Overview

The encoder divided-output controller (EDOUT) is used to output location information obtained from the encoder in the form of A-phase, B-phase, and Z-phase pulses.

41.2. Characteristics

- Support for changing the activation polarity of B.
- Support configuration of Z-phase output location and pulse width.
- Number of edges per rotation: 16 to 65536 (must be the multiple of four).
- Support for the input of update period event signals from the TRIGSEL.

41.3. Function overview

The EDOUT block diagram show as ***Figure 41-1. Block diagram of EDOUT***. In the figure, Phase A, Phase B and Phase Z represent the output pins of AB-phase a nd Z-phase respectively, and TRIG_IN represents the input signal from TRIGSEL.

Figure 41-1. Block diagram of EDOUT

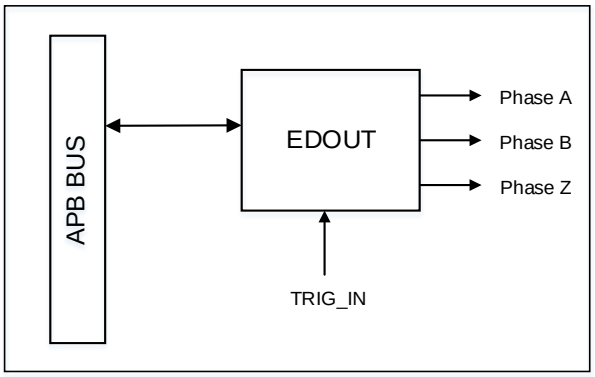

The EDOUT output waveform is similar to the incremental encoder output signal. By setting registers, reflect the current location information. As shown in ***Figure 41-2. ABZ-phase output waveforms***.

Figure 41-2. ABZ-phase output waveforms

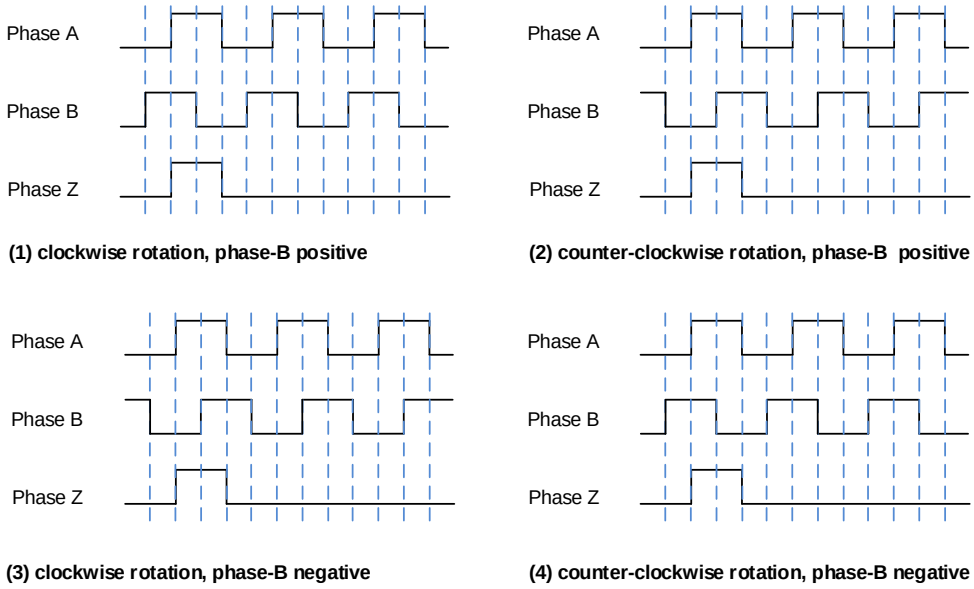

By system configuration, EDOUT converts location information from an incremental or absolute encoders to AB-phase and Z-phase output signals.

In addition to the initial setup of EDOUT, the CPU gets the location change from the encoder, updates the EDOUT register in each update period, and obtains the AB-phase and Z-phase output signals.

At this point, the event signal from the TIMER module must be input to EDOUT via TRIGSEL.

41.4. Z-phase output mode

Z-phase supports two operation modes:

- Operation mode 0

Z-phase output according to the current location. User sets the ZOSP and ZOWH bit fields in ZCR register. When current location (LOCCNT bit field in EDOUT_LCNT register reflect location information) match ZOSP, Z-phase starts to output signal and the pulse width is ZOWH edges.

- Operation mode 1

Z-phase output according to the number of edges. User sets the ZOSP and ZOWH bit fields in ZCR register. In each update period, when output edges match ZOSP, Z-phase starts to output signal and pulse width is ZOWH edges.

In the above two operation modes, if the ZOWH bit field is set to 0, it means that the Z-phase is not output. Note that the ZCR register must be configured during the EDOUT run (i.e. the EDOUTEN bit of EDOUT_ENABLE register is 1); otherwise, the Z-phase has no valid output.

41.5. Operation guidance

EDOUT outputs AB-phase and Z-phase signals based on register settings. The update period of the AB-phase and Z-phase output is determined by the input of the TRIGSEL. Generate update period using a timer, etc., and output a signal from TRIGSEL to EDOUT. The specific setting procedure are described below.

41.5.1. EDOUT initialization

The EDOUT initialization steps are as follows:

1. Configure the EDOUT relevant output pins
2. Initialization settings for the EDOUT

   Initialize EDOUT_CTL and EDOUT_LOC registers, for example, when the B-phase output is negative logic and the number of edges per rotation is 88 (4 × 22). Need to set the POL bit in EDOUT_CTL register to 1 and the LOCMAX bit field in EDOUT_LOC register to 87 (4*22-1).
3. Set the initial value in EDOUT_LCNT register

   The initial value is set to the initial location of the absolute or incremental encoder for conversion to the AB-phase and Z-phase signals represented by the value from 0 to LOCMAX in EDOUT_LCNT register. The formula for expressing location value with value from 0 to LOCMAX is [encoder location value]×[number of edges per rotation]/[resolution of encoder location value](rounded down).

   For example, when the number of edges in each rotation is 88, the resolution of the encoder location value is 20 bits (1048576), and the initial value is 931802. Need to set the LOCCNT in the EDOUT_LCNT register to 78 (931802 × 88 / 1048576).
4. Set the TRIGSEL

   For example, when setting TIMER to generate update period. Select the TIMER trigger output as EDOUT input. Certainly, EDOUT also support other triger source, but the high level width of trigger must greater than T_{PCLK} of EDOUT.
5. Enable the AB-phase and Z-phase output.

   To enable EDOUT output, setting the EDOUTEN bit in the EDOUT_ENABLE register to 1.
6. Start the TIMER operation.

   According to the TRIGSEL setting in step 4, the TIMER starts counting and generates a update period signal.

41.5.2. EDOUT update processing

The EDOUT update processing steps are as follows:

1. Get location information.

   Get location information from absolute or incremental encoder.

2. Set the value in EDOUT_OCNT register

   Firstly, calculate the value to be set in the PDC and EDGC bit fields of EDOUT_OCNT register. The current location represented by the value from 0 to LOCMAX is calculated as follows:

   (m) = [location value obtained in step 1]×[number of edges per rotation]/[resolution of encoder location value] (rounded down)

   At this point, the value of EDGC bit field is:

   (n) = (m) – [the previous calculated value of (m)]

   When the absolute value of (n) is greater than half of the number of rotated edges, then:

   A. If (n) is positive, the value of EDGC is (n) – [number of edges per rotation].

   B. If (n) is negative, the value of EDGC is (n) + [number of edges per rotation].

   When EDGC bit field is not 0, PDC bit field is [update period]/[T_{PCLK}]/[absolute value of the EDGC bit field] (rounded down). When the EDGC bit field is 0, set PDC bit field is 0xFFFF.

   Set the calculated PDC and EDGC bit fields value in the EDOUT_OCNT register.

41.5.3. EDOUT working example

As is shown in ***Figure 41-3. Example of the settings of EDOUT and the AB-Phase and Z-Phase output waveforms***. In this example, sets TIMER to generate update period and selects the TIMER trigger output as EDOUT input. The update period is 400000ns, the number of edges per rotation is 88, the B phase is positive, the Z phase output based on the current position, and the encoder location value represented from 0 to LOCMAX transition from the initial value of 78 to 83, 2 and 86.

Figure 41-3. Example of the settings of EDOUT and the AB-Phase and Z-Phase output

waveforms

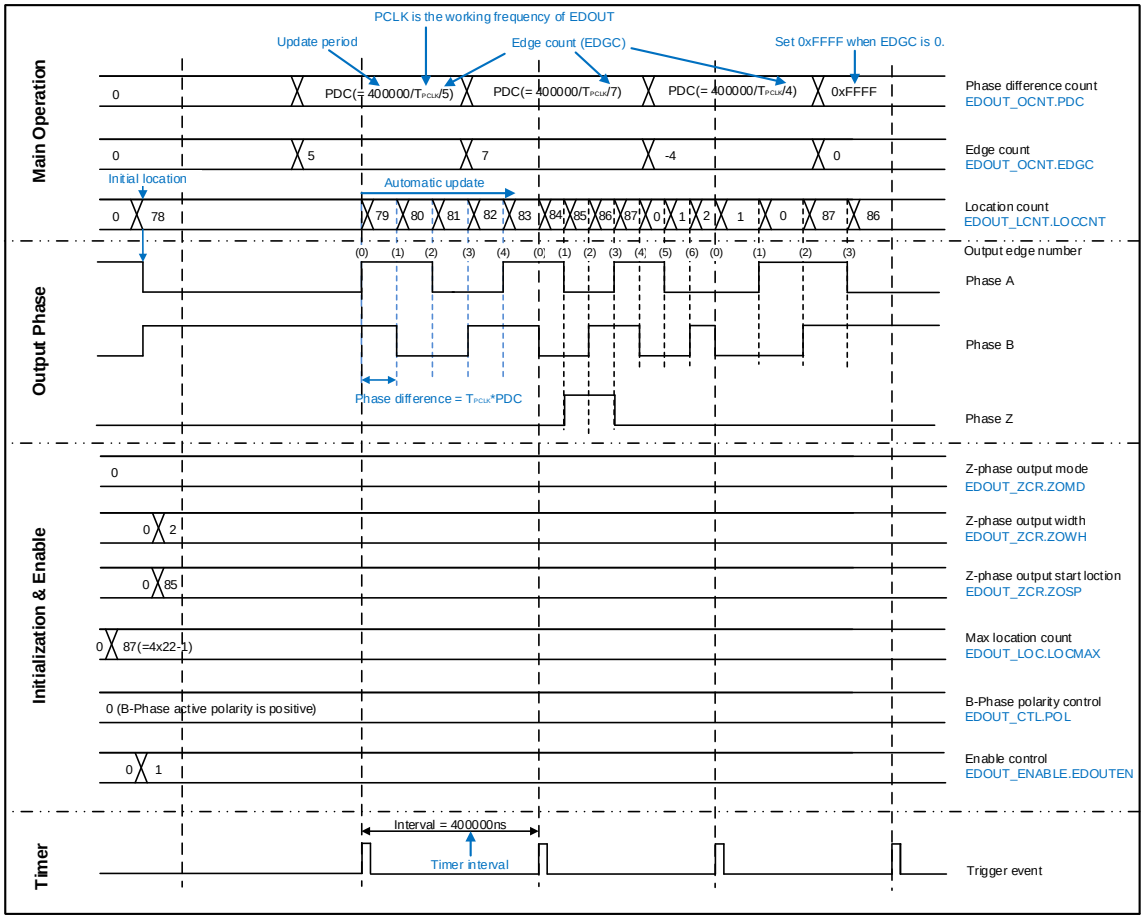
PCLK is the working frequency of EDOUT
Update period
Edge count (EDGC)
Set 0xFFFF when EDGC is 0.
Main Operation
PDC(= 400000/TPCLK/5)
PDC(= 400000/TPCLK/7)
PDC(= 400000/TPCLK/4)
0xFFFF
Phase difference count
EDOUT_OCNT.PDC
Edge count
EDOUT_OCNT.EDGC
Initial location
Automatic update
Location count
EDOUT_LCNT.LOCCNT
Output edge number
Output Phase
Phase A
Phase B
Phase difference = TPCLK*PDC
Phase Z
Initialization & Enable
Z-phase output mode
EDOUT_ZCR.ZOMD
Z-phase output width
EDOUT_ZCR.ZOWH
Z-phase output start loction
EDOUT_ZCR.ZOSP
Max location count
EDOUT_LOC.LOCMAX
0 (B-Phase active polarity is positive)
B-Phase polarity control
EDOUT_CTL.POL
Enable control
EDOUT_ENABLE.EDOUTEN
Timer
Interval = 400000ns
Timer interval
Trigger event

41.6. Register definition

EDOUT base address: 0x4001 8800

41.6.1. Control register (EDOUT_CTL)

Address offset: 0x00

Reset value: 0x0000 0000

This register has to be accessed by word (32-bit).

31	30	29	28	27	26	25	24	23	22	21	20	19	18	17	16
Reserved															

15	14	13	12	11	10	9	8	7	6	5	4	3	2	1	0
Reserved															POL
															rw

Bits	Fields	Descriptions
31:1	Reserved	Must be kept at reset value.
0	POL	B-Phase active polarity The active polarity of the B-phase output signal selection. If the EDOUTEN bit of EDOUT_ENABLE register is 0, the setting of this bit is reflected in the B phase output. Otherwise, this bit takes no effect. 0: Active polarity is positive 1: Active polarity is negative

41.6.2. Enable register (EDOUT_ENABLE)

Address offset: 0x04

Reset value: 0x0000 0000

This register has to be accessed by word (32-bit).

31	30	29	28	27	26	25	24	23	22	21	20	19	18	17	16
Reserved															

15	14	13	12	11	10	9	8	7	6	5	4	3	2	1	0
Reserved															EDOUTEN
															rw

Bits	Fields	Descriptions
31:1	Reserved	Must be kept at reset value.

0	EDOUTEN	EDOUT enable bit. When this bit is set to 0, the AB-phase output the corresponding state immediately after the EDOUT_LCNT register is configured, the Z-phase output state is set to 0. When this bit is set to 1, the EDOUT starts and outputs the AB-phase and Z-phase signals. 0: Disabled EDOUT 1: Enabled EDOUT

41.6.3. Location register (EDOUT_LOC)

Address offset: 0x08

Reset value: 0x0000 0000

This register has to be accessed by word (32-bit).

31	30	29	28	27	26	25	24	23	22	21	20	19	18	17	16
Reserved															

15	14	13	12	11	10	9	8	7	6	5	4	3	2	1	0
LOCMAX[15:0]															
rw															

Bits	Fields	Descriptions
31:16	Reserved	Must be kept at reset value.
15:0	LOCMAX[15:0]	Maximum location value These bits set the maximum location value for one rotation. The maximum location value is a multiple of four. If the maximum location value is “4×M”, set “4×M–1” in this register. The setting of these bits takes effect when the EDOUTEN bit of the EDOUT_ENABLE register is changed from 0 to 1. 0x0000~0x000E: Reserved 0x000F: The maximum location value is 16 ... 0xyyyy: The maximum location value is 0xyyyy+1

41.6.4. Output counter register (EDOUT_OCNT)

Address offset: 0x0C

Reset value: 0x0000 0000

This register has to be accessed by word (32-bit).

31	30	29	28	27	26	25	24	23	22	21	20	19	18	17	16
PDC[15:0]															
rw															

15	14	13	12	11	10	9	8	7	6	5	4	3	2	1	0

EDGC[15:0]
rw

Bits	Fields	Descriptions
31:16	PDC[15:0]	Phase difference count These bits set the phase difference between the A-phase signal and the B-phase signal for the next update period. The allowable range for setting value is 2 to 65535, in units of T_{PCLK}. When the EDGC bit field is set to 0, set these bits to 65535; when it is not 0, set them to "Update period / T_{PCLK} / Absolute value of EDGC" (rounded down). When EDOUT is running (i.e. the EDOUTEN bit of EDOUT_ENABLE register is 1), please ensure that these bits are set before the next update period event signal is generated.
15:0	EDGC[15:0]	Edge count These bits set the number of edges of the A-phase and the B-phase signal for the next update period. If you use reverse rotation, set a negative value that represents a two's complement. The allowable range for setting value are -32768 to 32767. The absolute value of these bits must not be greater than "Update period / (2*T_{PCLK})". When EDOUT is running (i.e. the EDOUTEN bit of EDOUT_ENABLE register is 1), please ensure that these bits are set before the next update period event signal is generated.

41.6.5. Location counter register (EDOUT_LCNT)

Address offset: 0x10

Reset value: 0x0000 0000

This register has to be accessed by word (32-bit).

31	30	29	28	27	26	25	24	23	22	21	20	19	18	17	16
Reserved															

15	14	13	12	11	10	9	8	7	6	5	4	3	2	1	0
LOCCNT[15:0]															
rw															

Bits	Fields	Descriptions
31:16	Reserved	Must be kept at reset value.
15:0	LOCCNT[15:0]	Current location value These bits are used to set the current location value when EDOUT stops (i.e. the EDOUTEN bit of EDOUT_ENABLE register is 0). The allowable range for setting value is 0 to LOCMAX. After the current position is set, A-phase and B-phase will output the corresponding state immediately. When EDOUT is running (i.e. the EDOUTEN bit of EDOUT_ENABLE register is 1), these bits reflect the location value

changes related to the A-phase and B-phase outputs.

41.6.6. Z-phase configure register (EDOUT_ZCR)

Address offset: 0x14

Reset value: 0x0000 0000

This register has to be accessed by word (32-bit).

31	30	29	28	27	26	25	24	23	22	21	20	19	18	17	16
Reserved							ZOMD	ZOWH[7:0]							
							rw	rw							

15	14	13	12	11	10	9	8	7	6	5	4	3	2	1	0
ZOSP[15:0]															
rw															

Bits	Fields	Descriptions
31:25	Reserved	Must be kept at reset value.
24	ZOMD	Z-phase output mode 0: Output according to the current location 1: Output according to the number of edges
23:16	ZOWH[7:0]	Z-phase output width
15:0	ZOSP[15:0]	Z-phase output start location

42. Controller area network (CAN)

42.1. Overview

CAN bus (Controller Area Network) is a bus standard designed to allow microcontrollers and devices to communicate with each other without a host computer. The CAN interface supports the CAN 2.0A/B protocol, ISO 11898-1:2015 and BOSCH CAN FD specification.

The CAN module is a CAN Protocol controller with a very flexible mailbox system for transmitting and receiving CAN frames. The mailbox system consists of a set of mailboxes that store configuration and control data, timestamp, message ID, and data. The space of up to 32 mailboxes can also be configured as Rx FIFO with ID filtering against up to 104 extended IDs or 208 standard IDs or 416 partial 8-bit IDs, and configure receive FIFO/mailbox private filter register for up to 32 ID filter table elements.

Note: GD32H737xx series does not support CAN FD frames.

42.2. Characteristics

- Supports CAN protocol version 2.0A/B.
- Compliant with the ISO 11898-1:2015 standard.
- Supports CAN FD frames with up to 64 data bytes, baudrate up to 8 Mbit/s.
- Supports CAN classical frame with up to 8 data bytes, baudrate up to 1 Mbit/s.
- Supports time stamp based on 16-bit free running counter.
- Supports transmitter delay compensation for CAN FD frames at faster data rates.
- Maskable interrupts.
- Supports four communication mode: normal mode, Inactive mode, Loopback and silent mode, and Monitor mode.
- Supports two power saving modes: CAN_Disable mode, and Pretended Networking mode.
- Support two wakeup methods for waking up from Pretended Networking mode: wakeup matching event, and wakup timeout event.
- 32 mailboxes when configures with 8 bytes data length each, configurable as Rx or Tx mailbox.
- Global network time, synchronized by a specific message.

Transmission

- Supports transmission abort.
- Tx mailbox status checkable.
- CRC for transmitted message.
- Supports priority of transmission message: lowest mailbox number, or highest priority.

Reception

- Receive private filter registers per Rx mailbox or Rx FIFO.
- Receive public filter register for Rx mailboxes and receive public filter register for Rx FIFO.
- Supports priority of message reception between mailboxes and Rx FIFO during matching process.
- Rx FIFO identifier filtering, supports identifier matching against either 104 extended, 208 standard, or 416 partial (8 bit) identifiers.
- Rx FIFO up to 6 frames depth, with DMA support.

42.3. Function overview

Figure 42-1. CAN module block diagram shows the CAN block diagram.

Figure 42-1. CAN module block diagram

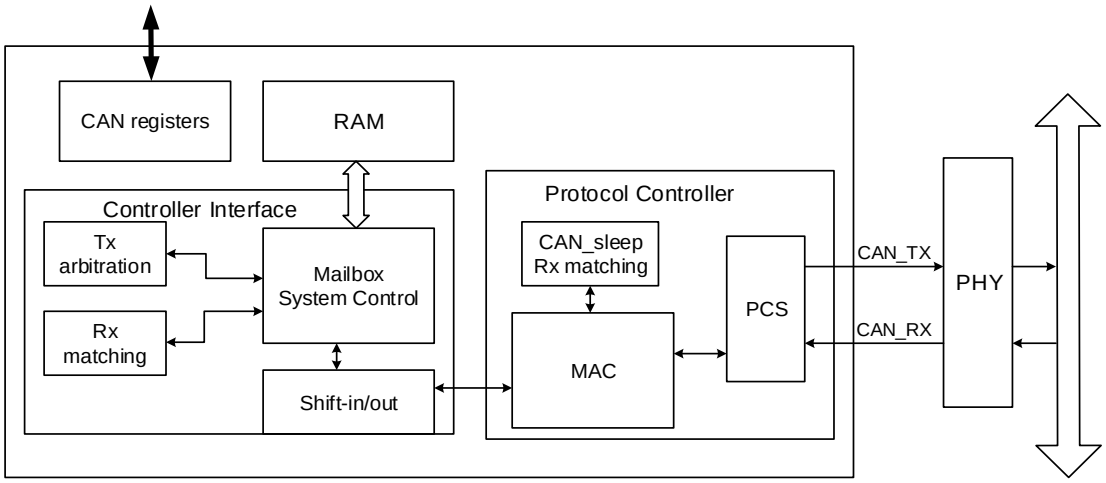

As shown in *Figure 42-1. CAN module block diagram*, CAN module includes three main parts:

- The Protocol controller
  The Protocol controller manages the communication on the CAN bus, including:
  MAC (Media Access Control):
  - Bit-stuffing/de-stuffing.
  - Stuff bit count for FD Frames.
  - Add CRC.
  - Construction of MAC frame.
  - ACK check/transmission.

  PCS (Physical Coding Sub-layer):
  - Bit timing.
  - Synchronization.
  - TDC (Transmitter delay compensation).

  Pretended Networking Rx matching:
  - Process reception matching in Pretended Networking mode.

- The Controller Interface

  The Controller Interface manages RAM space selection for reception and transmission, including:

  Tx arbitration:
  - Find out the frame with the highest priority.

  Rx matching:
  - Compare the frame data received in the Rx shift buffer (an internal mailbox descriptor) with the fields in Rx mailbox or Rx FIFO according to the configured matching order.

  Mailbox System Controller:
  - Manage RAM space selection for reception and transmission, control the mailbox CODE, control the Rx FIFO pointer, and control the access requirement from the APB bus to the RAM space.

    The messages are stored in an embedded RAM dedicated to the CAN module. The dedicated RAM base address is module base address.

  Shift in/out:
  - Tranmit data between the selected mailbox / Rx FIFO descriptor and the Tx or Rx shift buffer.

- CAN registers

  The CAN registers is responsible for the CAN module communication with the APB bus.

42.3.1. Mailbox descriptor

The mailbox descriptor shown in ***Table 42-1. Mailbox descriptor with 64 byte payload*** can be used for both extended (29-bit identifier) and standard (11-bit identifier) frames. Each mailbox is formed by 16, 24, 40, or 72 bytes, depending on the data bytes allocation for the message payload: 8, 16, 32, or 64 data bytes, respectively. The memory area from offset 0x80 to 0x27F is used by the mailboxes.

Table 42-1. Mailbox descriptor with 64 byte payload

	31	30	29	28	27 26 25 24	23	22	21	20	19 18 17 16	15 14 13 12 11 10 9 8 7 6 5 4 3 2 1 0
MDES0	FDF	BRS	ESI	Reserved	CODE[3:0]	Reserved	SRR	IDE	RTR	DLC[3:0]	TIMESTAMP[15:0]
MDES1	PRIO[2:0]			ID_STD[10:0]							ID_EXD[17:0]
MDES2	DATA_0[7:0]					DATA_1[7:0]					DATA_2[7:0] / DATA_3[7:0]
…	…					…					… / …
MDES17	DATA_60[7:0]					DATA_61[7:0]					DATA_62[7:0] / DATA_63[7:0]

MDES0: Mailbox descriptor word 0

Address offset: 0x80

31	30	29	28	27 26 25 24	23	22	21	20	19 18 17 16
FDF	BRS	ESI	Reserved	CODE[3:0]	Reserved	SRR	IDE	RTR	DLC[3:0]
rw	rw	rw		rw		rw	rw	rw	rw

15	14	13	12	11	10	9	8	7	6	5	4	3	2	1	0
TIMESTAMP[15:0]															
r															

Bits	Fields	Descriptions
31	FDF	FD format indicator This bit is used to distinguish between CAN and CAN FD format frames. For reception (Rx mailbox), no need to write this bit, it will be stored with the value received on the CAN bus.
30	BRS	Bit rate switch This bit defines whether the bit rate is switched for a CAN FD frame. For reception (Rx mailbox), no need to write this bit, it will be stored with the value received on the CAN bus.
29	ESI	Error state indicator This bit indicates if the transmitting node is error active or error passive. This bit does not exist in Classical frames. For transmission (Tx mailbox), it is transmitted dominant by error active nodes, and recessive by error passive nodes. For reception (Rx mailbox), no need to write this bit, it will be stored with the value received on the CAN bus.
28	Reserved	Must be kept at rest value.
27:24	CODE[3:0]	Mailbox Code (CODE) This bit field can be accessed by the CPU and by the CAN module, as part of the mailbox matching and arbitration process. The encoding is shown in ***Table 42-3. Mailbox Rx CODE*** and ***Table 42-4. Mailbox Tx CODE***.
23	Reserved	Must be kept at rest value.
22	SRR	Substitute remote request This bit is only used in extended format. For transmission (Tx mailbox), it must be set to ‘1’ (recessive), if the bus transmits this bit as ‘0’ (dominant), then it means an arbitration loss. For reception (Rx mailbox), it will be stored with the value received on the CAN bus. 0: Not valid for transmission in extended format frames. 1: Transmission in extended format frames.
21	IDE	ID extended bit This bit specifies whether the frame is standard or extended format. For reception (Rx mailbox), it will be stored with the value received on the CAN bus. 0: Frame format is standard. 1: Frame format is extended.

20	RTR	Remote transmission request For transmission (Tx mailbox), if this bit is set to '1' (recessive), and the bus transmits this bit as '0' (dominant), then it means an arbitration loss. If this bit is set to '0' (dominant), and the bus transmits this bit as '1' (recessive), it is treated as a bit error. If the value configured matches the value transmitted, it is considered a successful bit transmission. For reception (Rx mailbox), it will be stored with the value received on the CAN bus. 0: In Tx mailbox, the current mailbox has a data frame to be transmitted. In Rx mailbox, it may be considered in matching process. 1: In Tx mailbox, it means the current mailbox has a remote request frame to be transmitted. In Rx mailbox, incoming remote request frames may be stored. **Note:** When configured as CAN FD frames, the RTR bit must be negated. This bit must be considered in classical frames only.
19:16	DLC[3:0]	Data length code in bytes This bit field is the length (in bytes) of the Rx or Tx payload. For reception (Rx mailbox), no need to write this bit field, they are written by the CAN module with the DLC field of the received frame. For transmission (Tx mailbox), this bit field is written by the CPU with value of the frame to be transmitted. When RTR is 1, the frame to be transmitted is a remote request frame and does not include the data field, regardless of the DLC field.
15:0	TIMESTAMP[15:0]	Free-Running counter timestamp This bit field is a copy of the free running counter, captured for Tx and Rx frames at the time when the beginning of the ID field appears on the CAN bus.

Table 42-2. Data bytes for DLC

DLC	Data size in bytes
i (0 ≤ i ≤ 8)	i (0 ≤ i ≤ 8)
9	12
10	16
11	20
12	24
13	32
14	48
15	64

Table 42-3. Mailbox Rx CODE

CODE	Meaning	CODE after reception	Serviced(1)	RRFRMS(2)	Description
0b0000	INACTIVE	-	-	-	Mailbox does not participate in the matching process.
0b0100	EMPTY	FULL	-	-	After a frame is received successfully, the CODE field is automatically switches to FULL.

CODE	Meaning	CODE after reception	Serviced(1)	RRFRMS(2)	Description
0b0010	FULL	FULL	Yes	-	It remains FULL. If a new frame is moved to the mailbox after the mailbox was serviced, the code still remains FULL.
		OVERRUN	No		If the mailbox is FULL and a new frame is moved in before the CPU completes services it, the CODE field is automatically switches to OVERRUN.
0b0110	OVERRUN	FULL	Yes	-	If the CODE is OVERRUN and a new frame is moved in after CPU has serviced the mailbox, the CODE is automatically switches to FULL.
		OVERRUN	No		If the CODE field already indicates OVERRUN, and another new frame must be moved, the mailbox will be overwritten again, and the code will remain OVERRUN.
0b1010	RANSWER(3)	TANSWER (0x1110)	-	0	A Remote Answer was configured to recognize a remote request frame reception. After reception, the mailbox is set to transmit a response frame when RRFRMS bit in CAN_CTL2 register is 0. The code is automatically changed to TANSWER.
		-		1	The CODE is not effect during matching and arbitration process.
CODE[0] = 1	BUSY(4)	FULL OVERRUN	-	-	Indicates that the mailbox is being updated.

1. Serviced: Mailbox was serviced by CPU read, and was unlocked by reading CAN_TIMER register or other mailbox.
2. Remote Request Frame Stored bit, refer to ***Control register 2 (CAN_CTL2)***.
3. A mailbox with CODE 0b1010 should not be aborted. CODE 0b1010 must be used in mailbox which configured as CAN classical format, having the FDF bit reset.
4. If CODE[0] bit is set, the corresponding mailbox will not participate in the matching process. Notice that for Tx mailboxes, the BUSY bit should be ignored when read, except when MST bit in the CAN_CTL0 register is set.

Table 42-4. Mailbox Tx CODE

CODE	Meaning	CODE after transmission	RTR	Description
0b1000	INACTIVE	-	-	Mailbox does not participate in arbitration process.
0b1001	ABORT	-	-	Mailbox does not participate in arbitration process.
0b1100	DATA	INACTIVE	0	Transmit data frame. After transmission, the mailbox automatically returns to the INACTIVE state.
	REMOTE	EMPTY	1	Transmit remote request frame. After transmission, the mailbox automatically becomes an Rx empty mailbox

				with the same ID.
0b1110	TANSWER	RANSWER	-	This is an intermediate code which is automatically written to the mailbox by the controller interface when a matching remote request frame is received. After transmitting the remote response frame, the mailbox will automatically return to RANSWER state. The CPU can also write this code with the same effect. The remote response frame can be either a data frame or another remote request frame depending on the RTR bit.

MDES1: Mailbox descriptor word 1

Address offset: 0x84

31	30	29	28	27	26	25	24	23	22	21	20	19	18	17	16
PRIO[2:0]			ID_STD[10:0]											ID_EXD[17:16]	
rw			rw											rw	

15	14	13	12	11	rw	9	8	7	6	5	4	3	2	1	0
ID_EXD[15:0]															
rw															

Bits	Fields	Descriptions
31:29	PRIO[2:0]	Local priority This bit field is only used when LAPRIOEN bit in CAN_CTL0 register is set. This bit filed is only used for Tx mailboxes, while these bits are not transmitted, they are appended to the regular ID to define the transmission priority.
28:18	ID_STD[10:0]	Identifier for standard frame In standard frame format, only these 11 most significant bits (28 to 18) are used for frame identification in both reception and transmission cases. The 18 least significant bits are ignored.
17:0	ID_EXD[17:0]	Identifier for extended frame In extended frame format, ID_STD[10:0] & these bits are used for frame identification in both reception and transmission cases.

MDESx: Mailbox descriptor word x (x = 2..17)

Address offset: 0x80 + 0x04 * x (x = 2..17)

31	30	29	28	27	26	25	24	23	22	21	20	19	18	17	16
DATA_i[7:0]								DATA_i+1[7:0]							
rw								rw							

15	14	13	12	11	rw	9	8	7	6	5	4	3	2	1	0
DATA_i+2[7:0]								DATA_i+3[7:0]							
rw								rw							

Bits	Fields	Descriptions
31:24	DATA_i[7:0]	Data byte i (i = 4*x - 8) Refer to DATA_i+3[7:0] descriptions.
23:16	DATA_i+1[7:0]	Data byte i+1 (i = 4*x - 8) Refer to DATA_i+3[7:0] descriptions.
15:8	DATA_i+2[7:0]	Data byte i+2 (i = 4*x - 8) Refer to DATA_i+3[7:0] descriptions.
7:0	DATA_i+3[7:0]	Data byte i+3 (i = 4*x - 8) Up to 64 bytes can be used for a data frame, depending on the DLC value of the mailbox. For Rx frames, the data received from the CAN bus are stored in this bit field.

Mailbox number

When Rx FIFO is disabled, the dedicated RAM space is occupied by mailboxes only, so the mailbox number is the descriptor number which is incremented by one each time when across the complete mailbox descriptor length (with 8, 16, 32, or 64 data bytes).

When Rx FIFO is enabled (CAN FD mode disabled, data field is 8-byte length), the dedicated RAM space is occupied by both mailboxes and FIFO, so uniformly count the descriptor number by a mailbox descriptor length with 8 data bytes, then the mailbox number is the descriptor number which is occupied by mailbox.

Mailbox size for CAN FD

When CAN FD is enabled, the size of mailboxes that the CAN 512 bytes RAM can be partitioned is configured by MDSZ[1:0] bits in CAN_FDCTL register.

Table 42-5. Mailbox size

MDSZ[1:0]	Payload size in bytes	Mailbox size
0b00	8	32
0b01	16	21
0b10	32	12
0b11	64	7

42.3.2. Rx FIFO descriptor

The Rx FIFO descriptor is shown in ***Table 42-6. Rx FIFO descriptor***.

When RFEN bit in CAN_CTL0 register is 1, the RAM space which normally occupied by mailbox 0–5 with 8 byte payload is used for the Rx FIFO. FDES0 – FDES3 contains the output of the FIFO which is the oldest message that has been received but not yet read by the CPU. The RAM region 0x90-0xDC is reserved for internal use of the FIFO.

When RFEN bit in CAN_CTL0 register is 1, the RAM space which normally occupied by mailbox 6–31 with 8 byte payload is used for the ID filter table (configurable for 8 to up to 104 table elements) for receiving frames matching process into the FIFO. The ID filter table only contains 8 elements from FDES4 to FDES11 by default.

Table 42-6. Rx FIFO descriptor

	31 30 29 28 27 26 25 24 23	22	21	20	19 18 17 16	15 14 13 12 11 10 9 8 7 6 5 4 3 2 1 0
FDES0	IDFMN[8:0]	SRR	IDE	RTR	DLC[3:0]	TIMESTAMP[15:0]
FDES1	Reserved	ID_STD[10:0]				ID_EXD[17:0]
FDES2	DATA_0[7:0]	DATA_1[7:0]			DATA_2[7:0]	DATA_3[7:0]
FDES3	DATA_4[7:0]	DATA_5[7:0]			DATA_6[7:0]	DATA_7[7:0]
0x90 - 0xDC	Reserved					
FDES4	ID filter table element 0					
…	…					
FDES107	ID filter table element 103					

FDES0: Rx FIFO descriptor word 0

Address offset: 0x80

31	30	29	28	27	26	25	24	23	22	21	20	19	18	17	16
IDFMN[8:0]									SRR	IDE	RTR	DLC[3:0]			
r									r	r	r	r			

15	14	13	12	11	10	9	8	7	6	5	4	3	2	1	0
TIMESTAMP[15:0]															
r															

Bits	Fields	Descriptions
31:23	IDFMN[8:0]	Identifier filter matching number This bit field indicates which ID filter table element matches the received message that is in the output of the Rx FIFO.
22	SRR	Substitute remote request This bit is only used in extended format. It will be stored with the value received on the CAN bus.
21	IDE	ID extended bit This bit specifies whether the frame is standard or extended format. 0: Frame format is standard. 1: Frame format is extended.
20	RTR	Remote transmission request 0: Data frames are accepted

		1: Remote frames are accepted
19:16	DLC[3:0]	Data length code in bytes This bit field is the length (in bytes) of the Rx payload. For reception, this bit field is written by the CAN module with the DLC field of the received frame.
15:0	TIMESTAMP[15:0]	Free-Running counter timestamp This bit field is a copy of the free running counter, captured for Rx frames at the time when the beginning of the ID field appears on the CAN bus.

FDES1: Rx FIFO descriptor word 1

Address offset: 0x84

31	30	29	28	27	26	25	24	23	22	21	20	19	18	17	16
Reserved			ID_STD[10:0]											ID_EXD[17:16]	
								r						r	

15	14	13	12	11	rw	9	8	7	6	5	4	3	2	1	0
ID_EXD[15:0]															
r															

Bits	Fields	Descriptions
31:29	Reserved	Must be kept at rest value.
28:18	ID_STD[10:0]	Identifier for standard frame In standard frame format, only these 11 most significant bits (28 to 18) are used for frame identification. The 18 least significant bits are ignored.
17:0	ID_EXD[17:0]	Identifier for extended frame In extended frame format, ID_STD[10:0] & these bits are used for frame identification.

FDES2: Rx FIFO descriptor word 2

Address offset: 0x88

31	30	29	28	27	26	25	24	23	22	21	20	19	18	17	16
DATA_0[7:0]								DATA_1[7:0]							
r								r							

15	14	13	12	11	rw	9	8	7	6	5	4	3	2	1	0
DATA_2[7:0]								DATA_3[7:0]							
r								r							

Bits	Fields	Descriptions
31:24	DATA_0[7:0]	Data byte 0 Refer to DATA_3[7:0] descriptions.

23:16	DATA_1[7:0]	Data byte 1 Refer to DATA_3[7:0] descriptions.
15:8	DATA_2[7:0]	Data byte 2 Refer to DATA_3[7:0] descriptions.
7:0	DATA_3[7:0]	Data byte 3 Up to 8 bytes can be used for a data frame, depending on the DLC value of the mailbox. FD frames is not supported to receive in Rx FIFO.

FDES3: Rx FIFO descriptor word 3

Address offset: 0x8C

31	30	29	28	27	26	25	24	23	22	21	20	19	18	17	16
DATA_4[7:0]								DATA_5[7:0]							
r								r							

15	14	13	12	11	rw	9	8	7	6	5	4	3	2	1	0
DATA_6[7:0]								DATA_7[7:0]							
r								r							

Bits	Fields	Descriptions
31:24	DATA_4[7:0]	Data byte 4 Refer to DATA_7[7:0] descriptions.
23:16	DATA_5[7:0]	Data byte 5 Refer to DATA_7[7:0] descriptions.
15:8	DATA_6[7:0]	Data byte 6 Refer to DATA_7[7:0] descriptions.
7:0	DATA_7[7:0]	Data byte 7 Up to 8 bytes can be used for a data frame, depending on the DLC value of the mailbox. FD frames is not supported to receive in Rx FIFO.

FDESx: Rx FIFO descriptor word x (x = 4..107)

Address offset: 0xE0 + 4 * (x - 4)

This descriptor word shows the three different formats of the ID filter table elements, depending on the configuration of FS[1:0] bits in CAN_CTL0 register.

Note: The format is applied to all ID filter table elements. It is not possible to mix formats within the table.

Format A mode:

31	30	29	28	27	26	25	24	23	22	21	20	19	18	17	16
RTR_A	IDE_A	Reserved	ID_STD_A[10:0]											Reserved	
			ID_EXD_A[28:16]												

rw	rw								rw						
15	14	13	12	11	rw	9	8	7	6	5	4	3	2	1	0
Reserved															
ID_EXD_A[15:0]															
rw															

Bits	Fields	Descriptions
31	RTR_A	Remote frame for format A This bit specifies whether remote frames can be stored into the FIFO or not when matches. 0: It indicates that remote frames are rejected and data frames can be stored. 1: It indicates that remote frames can be stored and data frames are rejected.
30	IDE_A	ID Extended frame for format A This bit specifies whether extended frames can be stored into the FIFO or not when matches. 0: Extended frames are rejected and standard frames can be stored. 1: Extended frames can be stored and standard frames are rejected.
29	Reserved	Must be kept at rest value.
28:1	ID_STD_A[10:0]/ ID_EXD_A[28:0]	ID in format A This bit field specifies one full standard ID (standard or extended) for Rx FIFO matching process. If IDE_A is 0, the 18 to 28 bits are used for standard ID, and the rest bits are reserved; otherwise, all these bits are used for extended ID.

Format B mode:

31	30	29	28	27	26	25	24	23	22	21	20	19	18	17	16
RTR_B0	IDE_B0	ID_STD_B_0[10:0]											Reserved		
		ID_EXD_B_0[13:0]													
rw	rw								rw						

15	14	13	12	11	rw	9	8	7	6	5	4	3	2	1	0
RTR_B1	IDE_B1	ID_STD_B_1[10:0]											Reserved		
		ID_EXD_B_1[13:0]													
rw	rw								rw						

Bits	Fields	Descriptions
31	RTR_B0	Remote frame 0 for format B This bit specifies whether remote frames can be stored into the FIFO or not when matches. 0: It indicates that remote frames are rejected and data frames can be stored. 1: It indicates that remote frames can be stored and data frames are rejected.
30	IDE_B0	ID Extended frame 0 for format B

		This bit specifies whether extended frames can be stored into the FIFO or not when matches. 0: Extended frames are rejected and standard frames can be stored. 1: Extended frames can be stored and standard frames are rejected.
29:16	ID_STD_B_0[10:0]/ ID_EXD_B_0[13:0]	ID for frame 0 in format B This bit field specifies a full standard ID or partial 14-bit extended ID for Rx FIFO matching process. If IDE_B0 is 0, the 19 to 29 bits are used for standard ID, and the rest bits are reserved; otherwise, these bits are used for partial 14-bit extended ID, compared with the 14 most significant bits of the received ID.
15	RTR_B1	Remote frame 1 for format B Refer to RTR_B0 descriptions.
14	IDE_B1	ID Extended frame 1 for format B Refer to IDE_B0 descriptions.
13:0	ID_STD_B_1[10:0]/ ID_EXD_B_1[13:0]	ID for frame 1 in format B Refer to ID_STD_B_0[10:0]/ ID_EXD_B_0[13:0] descriptions.

Format C mode:

31	30	29	28	27	26	25	24	23	22	21	20	19	18	17	16
ID_C_0[7:0]								ID_C_1[7:0]							
rw								rw							

15	14	13	12	11	rw	9	8	7	6	5	4	3	2	1	0
ID_C_2[7:0]								ID_C_3[7:0]							
rw								rw							

Bits	Fields	Descriptions
31:24	ID_C_0[7:0]	ID for frame 0 in format C This bit field specifies a partial 8-bit standard ID or partial 8-bit extended ID for Rx FIFO matching process. In both standard and extended frame formats, the 8 bit field is compared with the 8 most significant bits of the received ID.
23:16	ID_C_1[7:0]	ID for frame 1 in format C Refer to ID_C_0[7:0] descriptions.
15:8	ID_C_2[7:0]	ID for frame 2 in format C Refer to ID_C_0[7:0] descriptions.
7:0	ID_C_3[7:0]	ID for frame 3 in format C Refer to ID_C_0[7:0] descriptions.

42.3.3. Communication modes

The CAN interface has four communication modes:

- Normal mode
- Inactive mode
- Loopback and silent mode
- Monitor mode

Normal mode

In normal mode, the message reception and transmission, and errors are all managed normally, and all CAN protocol functions are enabled.

Inactive mode

To enter Inactive mode, set INAMOD bit in CAN_CTL0 to 1 to enable Inactive mode, then set HALT bit in CAN_CTL0 register to 1 or put the chip into Debug mode.

When Inactive mode is requested, the following steps are performed before INAS bit asserted:

1. Wait for the bus 11 consecutive recessive bits.
2. Wait for the current transmission or reception processes being finished, it means all internal activities such as arbitration, matching, shift-in, and shift-out being finished. A pending shift-in does not prevent entering Inactive mode.
3. The Tx pin is driven as ‘1’ (recessive).
4. Stop the prescaler.
5. Enable write access to the CAN_ERR0 register, which is read-only in other modes.
6. Set NRDY bit and INAS bit in CAN_CTL0 register.

When Inactive mode is entered, INAS bit in CAN_CTL0 register is set to 1 by CAN.

In Inactive mode, neither transmission nor reception is performed, and its prescaler is stopped, all registers are accessible.

To exit from Inactive mode, one of the following methods can meet:

- Clear INAMOD bit in CAN_CTL0.
- Clear HALT bit in CAN_CTL0 register, or the chip is removed from Debug mode.

If exiting from Inactive mode is requested, then INAS bit in CAN_CTL0 register is cleared after the CAN prescaler is running again. When out of Inactive mode, CAN module tries to resynchronize to the CAN bus by waiting for 11 consecutive recessive bits.

Note: When in Inactive mode, the CAN_Disable mode request, or the Pretended Networking mode request will lead to INAS bit in CAN_CTL0 register be cleared and LPS bit in CAN_CTL0 register be set.

Loopback and silent mode

To enter this mode, set the LSCMOD bit in CAN_CTL1 register to 1. In this mode, the messages are internally transmitted back to the receiver input, and the bit sent during the ACK slot in the frame acknowledge field is ignored to ensure reception transmitted by itself. Both transmit and receive interrupts are generated.

Loopback and silent mode is used for self-test. The Rx pin is ignored and the Tx pin holds in recessive state.

Monitor mode

To enter this mode, set MMOD bit in CAN_CTL1 register to 1.

When Monitor mode is entered, ERRSI[1:0] bit field in CAN_ERR1 register is set to 0b01 by CAN to indicate that the module works in an Error Passive state. In this mode, error counters are frozen for transmission and reception.

In Monitor mode, no transmission is performed and reception is performed only when messages are acknowledged by other CAN nodes, detection of a message that has not been acknowledged will lead to a bit dominant error flag (without changing the RECNT[7:0] or REFCNT[7:0] in CAN_ERR0 register).

42.3.4. Power saving modes

The CAN interface has two power saving modes:

- CAN_Disable mode.
- Pretended Networking mode.

In these two power saving modes, the dedicated RAM and the registers in SRAM can not be accessed.

CAN_Disable mode

The CAN module is enabled or disabled by configuring the CANDIS bit in CAN_CTL0 register.

For power saving, if CANDIS bit is set to 1 to disable CAN module, the CAN module will enter CAN_Disable mode after a delay when the LPS bit and NRDY bit in CAN_CTL0 register are changed to 1.

When CAN is disabled, the clocks to the Protocol controller and the Controller Interface are disabled. All registers except the CAN_RMPUBF, CAN_RFIFOPUBF, CAN_RFIFOIFMN, and CAN_RFIFOMPFx (x=0..31) registers are accessible. Also the dedicated RAM can not be accessed.

After CAN is enabled, you need to dalay a time to wait for LPS bit in CAN_CTL0 register to be cleared for Protocol controller recognization. When CAN is enabled, CAN module requests to resume the clocks to the Protocol controller and the Controller Interface.

Pretended Networking mode

Pretended Networking mode is used to receive wakeup messages with low power consumption. This mode can work together with MCU deepsleep mode.

To enter Pretended Networking mode, set PNEN bit and PNMOD bit in CAN_CTL0 register to 1, and optionally put the MCU into deepsleep mode.

When Pretended Networking mode is requested, the following steps are performed:

1. Wait for the bus to be in Idle state, or else wait for the third bit of Intermission, and then checks it to be recessive.
2. Set LPS bit and PNS bit in CAN_CTL0 register.
3. Request to disable the Controller Interface clock, while keeping the Protocol controller clock running.

In Pretended Networking mode, Controller Interface clock is disabled and Protocol controller is kept clocked (if the MCU works in deepsleep mode, the clock of CAN Protocol Controller should be configured as IRC64MDIV in advance, otherwise the the clock of CAN Protocol Controller will be lost), so that the reception process is still active to filter messages. The matching, arbitration, shift-in and shift-out processes are not performed in Pretended Networking mode.

To exit from Pretended Networking mode, the following method can meet:

- When a wakeup event is detected, and a wake up interrupt is occured. Clear LPS bit and PNS bit in CAN_CTL0 register.
- Clear LPS bit and PNS bit in CAN_CTL0 register.

If exiting from Pretended Networking mode is requested, CAN module will wait for the bus to be in Idle state or else wait for the third bit of Intermission to clear LPS bit and PNS bit in CAN_CTL0 register, and resume normal mode, CAN module will be synchronized to the CAN bus.

42.3.5. Data transmission

For transmission, an arbitration mechanism decides whether the Tx mailbox transmission priority is depending on the message ID (the PRIO field can also be configured to participate in arbitration), or on the mailbox number.

The quantity of mailboxes in CAN FD format is determined by MDSZ[1:0] bits in CAN_FDCTL register, refer to ***Table 42-5. Mailbox size***.

Transmit process

To transmit a CAN frame, a Tx mailbox must be prepared for transmission in following steps:

1. Check whether the corresponding mailbox state MSx bit in CAN_STAT register is set and clear it.

2. If the mailbox is active (either Tx or Rx), inactivate the mailbox by method described in ***Tx mailbox inactivation*** or ***Rx mailbox inactivation***, when Tx mailbox inactivation is performed, do the following steps, when Rx mailbox inactivation is performed, go to step 6. While if the mailbox is inactive (either Tx or Rx), go to step 6.
3. Poll the the corresponding MSx bit in CAN_STAT register to be set, or by the interrupt when MIEx bit in CAN_INTEN register is set.
4. Read back the CODE field to get the state of the mailbox (aborted, or transmitted).
5. Clear the corresponding flag MSx in the CAN_STAT register.
6. Write mailbox ID field (plus the mailbox PRIO field if LAPRIOEN bit in CAN_CTL0 register is set to 1) of the MDES1 word.
7. Write payload data bytes in mailbox DATA field of MDESx (x = 2..17) word.
8. Configure the mailbox IDE, RTR, FDF, BRS, ESI, and DLC field to MDES0 word.
9. Activate the mailbox to transmit the frame by setting mailbox CODE field to 0b1100. When the mailbox is activated, it participates in the arbitration process and is eventually transmitted according to its priority. When the mailbox payload size is less than the mailbox DLC value, CAN adds the necessary number of bytes with constant 0xCC to meet the expected DLC.

Upon a successful transmission, the CODE field is automatically updated, and the TIMESTAMP field is automatically updated with the value of the free running counter; the CRC registers (CAN_CRCC and CAN_CRCCFD) are updated, and the corresponding flag MSx in the CAN_STAT register is set, if the interrupt enable bit MIEx in CAN_INTEN register is set, an interrupt will be generated.

Arbitration process

When more than one Tx mailbox is pending, the arbitration process which searching from the lowest number mailbox to the higher ones will give the transmission order. The arbitration algorithm is controlled by the MTO bit in CAN_CTL1 register.

The arbitration process starts when matching one of the following situations:

- The CRC field on CAN bus: number of ASD[4:0] (in CAN_CTL2 register) CAN bits delay after the first bit of the CRC field.
- The Error or Overload Delimiter field on CAN bus.
- CAN bus is recovering from Bus Off state: number of ASD[4:0] (in CAN_CTL2 register) CAN bits delay after the counter TECNT[7:0] counted to 124. Recovering from Bus Off state needs 128 times of 11 continuous recessive bits, which is counted by TECNT[7:0] in CAN_ERR0 register.
- Exit from Inactive mode, or power saving mode (including CAN_Disable mode and Pretended Networking mode).
- Rewrite of MDES0 word of arbitration winner (temporary winner or final winner).
- Rewrite to MDES0 word of the scanned mailbox (arbitration is on-going): if no arbitration winner is found when scan finished, arbitration will restart at soon; otherwise, the arbitration process is finished.
- Write to MDES0 word of a mailbox: when no arbitration is processing, and no arbitration

winner exists, and the CAN bus is not in SOF-DATA field / SOF-Control field of a data / remote frame or Error / Overload flag field of an Error / Overload frame.

- CAN node enters Bus Integration state (refer to ***Bus integration state***): Number of ASD[4:0] (in CAN_CTL2 register) CAN bits delay after the state.

Arbitration process stops when matching one of the following situations:

- All mailboxes are scanned.
- A Tx active mailbox is found when MTO bit in CAN_CTL1 register is set to 1 (lowest-number mailbox first).
- The Error or Overload flag field on CAN bus.
- The SOF field of the next frame on CAN bus.
- When Inactive mode, CAN_Disable mode or Pretended Networking mode is requested.

Lowest-number mailbox first

If MTO bit in CAN_CTL1 register is set to 1, the lowest number Tx mailbox is transmitted first, and LAPRIOEN bit in CAN_CTL0 register has no effect.

Highest-priority mailbox first

If MTO bit in CAN_CTL1 register is set to 0, then the Tx mailbox with the highest priority is transmitted first. The highest priority Tx mailbox is the one that has the lowest arbitration value (refer to ***Table 42-7. Mailbox arbitration value(32 bit) when local priority disabled*** and ***Table 42-8. Mailbox arbitration value(35 bit) when local priority enabled***) among all Tx mailboxes. If more than one mailboxes have equivalent arbitration values, the mailbox with the lowest number is the arbitration winner.

When LAPRIOEN bit in CAN_CTL0 register is set to 1, the local priority is disabled, the bits participate in the internal arbitration process are exactly what will be transmitted to the CAN bus, shown in ***Table 42-7. Mailbox arbitration value(32 bit) when local priority disabled***.

When LAPRIOEN bit in CAN_CTL0 register is set to 1, the local priority is enabled, then the mailbox PRIO field will participate in the internal arbitration process. Shown in ***Table 42-8. Mailbox arbitration value(35 bit) when local priority enabled***, the mailbox PRIO field is the most significant part of the arbitration value, thus mailboxes with low PRIO values have higher priority regardless of the rest of their arbitration values, while the PRIO field will not be transmitted to the CAN bus.

Table 42-7. Mailbox arbitration value(32 bit) when local priority disabled

IDE	31 30 29 28 27 26 25 24 23 22 21 20	19	18	17 16 15 14 13 12 11 10 9 8 7 6 5 4 3 2 1	0
0	ID_STD[10:0]	RTR	IDE	Reserved	
1	ID_EXD[28:18]	SRR	IDE	ID_EXD[17:0]	RTR

Table 42-8. Mailbox arbitration value(35 bit) when local priority enabled

IDE	34 33 32	31 30 29 28 27 26 25 24 23 22 21	20	19	18 17 16 15 14 13 12 11 10 9 8 7 6 5 4 3 2 1	0
0	PRIO[2:0]	ID_STD[10:0]	RTR	IDE	Reserved	
1	PRIO[2:0]	ID_EXD[28:18]	SRR	IDE	ID_EXD[17:0]	RTR

Arbitration start delay

Arbitration start delay is configured by ASD[4:0] bits in CAN_CTL2 register to optimize the transmission performance when the arbitration process ends too early to give a chance for the CPU to overwrite the winner Tx mailbox, thus the arbitration is restarted and may not be able to transmit in time.

Shift-out

The shift-out process is the copy operation of the content from a Tx mailbox to the Tx shift buffer (an internal mailbox descriptor) after the arbitration winner is found. The message on the Tx shift buffer is transmitted according to the CAN protocol rules.

When the shift-out process is done, write access to the MDES0 word of the corresponding mailbox is blocked even if MST bit in CAN_CTL0 register is set. The write access to MDES0 word of the corresponding mailbox is recoverd when matching one of the following situations:

- After the mailbox is transmitted and the corresponding flag MSx in the CAN_STAT register is cleared by the CPU.
- CAN node enters Inactive mode or Bus Off state.
- CAN node loses the bus arbitration or there is an error during the transmission.

The shift-out process starts when matching one of the following situations:

- The first bit of Intermission field on CAN bus.
- During Bus Idle state.
- During Wait For Bus Idle state.

During the shift-out process, the CPU has priority to access the corresponding memory in Bus Idle state, and the shift-out operation has the lowest priority to access the corresponding memory.

Abort

To request an abort of the transmission, the recommended operation is setting MST bit in the CAN_CTL0 register to 1, then writing ABORT (0b1001) to the CODE field of the mailbox.

The writing of ABORT (0b1001) to the mailbox MDES0 word is successfully when the mailbox is not the arbitration winner, or when the mailbox is the arbitration winner but the shift-out of the mailbox is not finished yet. In this situation, the corresponding MSx bit in CAN_STAT

register will be set.

The writing of ABORT (0b1001) to the mailbox MDES0 word is blocked when shift-out of the mailbox is already finished, or when the mailbox is being transmitted. In this situation, the abort request is captured and kept pending until the frame is transmitted successfully or failed:

- The frame is transmitted successfully, the mailbox is not aborted: If the frame is transmitted successfully, the pending abort request will be cleared automatically, the corresponding MSx bit in CAN_STAT register will be set, and an interrupt will occur when MIEx bit in CAN_INTEN register is set.
- The frame is transmitted failed, the mailbox is aborted: If the frame failed to be transmitted, the pending abort request is responsed, the write access to the mailbox is recoverd, with ABORT code written to the mailbox MDES0 word, the corresponding MSx bit in CAN_STAT register will be set, and an interrupt will occur when MIEx bit in CAN_INTEN register is set.
  When matching one of the following situations, the frame failed to be transmitted:
  - Lose the bus arbitration.
  - There is an error during the transmission.
  - Enter Bus Off state.
  - There is an overload frame.

Tx mailbox inactivation

The way to inactivate a Tx mailbox:

- Write the CODE field of the Tx mailbox MDES0 with ABORT. This is the recommended way for inactivation, which will not cause the unknown transmission.
  This operation must be done when MST bit in the CAN_CTL0 register is 1.

42.3.6. Data reception

For Classical CAN frames, reception through FIFO and mailbox are both supported.

For CAN FD frames, reception is only supported through mailbox.

Mailbox reception

For mailbox reception, a received frame will be stored into the mailbox only when the frame ID matches the mailbox ID programmed in the ID field (or the mailbox ID group when the filter registers are applied).

To receive a CAN frame into a mailbox, a mailbox must be prepared for reception in following steps:

1. If the mailbox is active (either Tx or Rx), inactivate the mailbox by method described in ***Tx mailbox inactivation*** or ***Rx mailbox inactivation***, when Tx mailbox inactivation is performed, do the following steps, when Rx mailbox inactivation is performed, go to step 4. While if the mailbox is inactive (either Tx or Rx), go to step 4.

2. Poll the the corresponding MSx bit in CAN_STAT register to be set, or by the interrupt when MIEx bit in CAN_INTEN register is set.
3. Read back the CODE field to make sure that the mailbox is aborted, or transmitted.
4. Clear the corresponding flag MSx in the CAN_STAT register.
5. Write the mailbox ID field of MDES1 word, and write IDE, RTR field of MDES0 word if needed.
6. Write the EMPTY (0b0100) to the CODE field of MDES0 word to activate the mailbox.

Upon a successful reception, all bits of the mailbox descriptor (DATA, ID, TIMESTAMP, SRR, IDE, RTR, FDF, BRS, ESI, DLC, CODE) are stored with the received data field or automatically updated, and the corresponding flag MSx in the CAN_STAT register is set, if the interrupt enable bit MIEx in CAN_INTEN register is set, an interrupt will be generated. The TIMESTAMP field is automatically updated with the value of the free running counter at the time of the second bit of frame's ID field.

To service (read) a Rx mailbox, the recommended steps are shown as below:

1. Poll the corresponding flag MSx in the CAN_STAT register to be set, or by the interrupt when MIEx bit in CAN_INTEN register is set.
2. Read the mailbox MDES0 word, and poll until the BUSY bit (in CODE field) is 0. When the BUSY bit is 0, the read operation of the mailbox will lock the mailbox, so that to prevent the mailbox being overwritten.
3. Read the contents of the mailbox.
4. Clear the corresponding flag MSx in the CAN_STAT register.
5. Read CAN_TIMER register to unlock the mailbox.

Rx mailbox locking

A locking mechanism is only applied for Rx mailbox: For CODE field with Rx FULL or Rx OVERRUN, a CPU read to the mailbox MDES0 word will lock the mailbox, thus the locking will prevent a new matching frame overwriting it.

The locking will be released when reading the CAN_TIMER register (global unlocking operation), or when MDES0 word of any other mailbox is read. When unlocked, a shift-in process will start with the pending message (the same in Inactive mode, while when LPS bit in CAN_CTL0 register is 1, the shift-in process will be delayed until LPS bit changes to 0).

If the mailbox is not unlocked in time, while a new matching frame is coming, then the new frame will overwrite the Rx shift buffer without a notification of a lost message, and no error is recorded.

Note: Mailbox inactivation (write CODE with Rx INACTIVE, or Tx ABORT) has higher priority than locking.

Rx mailbox inactivation

The way to inactivate a Rx mailbox:

- Write the CODE field of the Rx mailbox MDES0 with INACTIVE (Tx INACTIVE or Rx

INACTIVE). But this operation may lead to a result that a matched message lost without notice.

Note: The Rx mailbox inactivation will automatically unlocks the mailbox. There is no write protection for Rx FIFO.

Rx FIFO reception

The Rx FIFO is 6-message deep. When RFEN bit in CAN_CTL0 register is 1, Rx FIFO is enabled for reception. Rx FIFO can only be used for reception, and must not be enabled when CAN FD mode is enabled. The Rx FIFO descriptor refers to ***Rx FIFO descriptor***. There is a powerful filter system provided to filter a group of identifiers, reducing the interrupt servicing workload. The number of Rx FIFO filters is configured in RFFN[3:0] bits of CAN_CTL2 register, up to 32 filters are configured in CAN_RFIFOMPFx (x = 0..31) registers (if RPFQEN bit in CAN_CTL0 register is 1), or CAN_RFIFOPUBF and CAN_RFIFOMPFx (x = 0..31) registers (if RPFQEN bit in CAN_CTL0 register is 0).

Rx FIFO has unread messages: Only when MS5_RFNE bit in CAN_STAT register is 1, the FDES0-FDES3 words are valid to be read to get the received message. When MS5_RFNE bit in CAN_STAT register is 1, it means there is at least one frame available to be read from Rx FIFO. If the interrupt enable bit MIEx in CAN_INTEN register is set, an interrupt will be generated; while if DMAEN bit in CAN_CTL0 register is set, the MS5_RFNE flag will generate the DMA request and no Rx FIFO interrupt is generated.

- To service (read) Rx FIFO by CPU, the recommended steps are shown as below:
  1. Poll the flag MS5_RFNE in the CAN_STAT register to be set, or by the interrupt when MIE5 bit in CAN_INTEN register is set.
  2. Read the Rx FIFO FDES0-FDES3 words, and if needed read CAN_RFIFOIFMN register.
  3. Clear the flag MS5_RFNE in the CAN_STAT register. If there are more than one messages in the Rx FIFO, the act of clearing the flag will update the Rx FIFO FDES0-FDES3 words with the next message, and CAN_RFIFOIFMN register will be updated at the same time, the flag MS5_RFNE remains set, and an interrupt occurs again if enabled, repeat step 2 and 3 to get the received messages.
- To service (read) Rx FIFO by DMA controller, the recommended operation are shown as below :
  1. Configure and enable the DMA controller for Rx FIFO reception.
  2. Service (read) Rx FIFO by CPU until the flag MS5_RFNE in the CAN_STAT register is cleared, to avoid an additional DMA request after DMA mode is enabled.
  3. Set DMAEN bit in CAN_CTL0 register to 1 to enable DMA mode.
  4. Wait for the DMA request. When the flag MS5_RFNE in the CAN_STAT register is set, a DMA request is generated.
  5. Upon receiving the DMA request, the DMA will read the Rx FIFO FDES0 to FDES3. FDES3 word must be read to clear the flag MS5_RFNE in the CAN_STAT register,

if there are more than one messages in the Rx FIFO, the act of reading FDES3 word will update the Rx FIFO FDES0-FDES3 words with the next message, and CAN_RFIFOIFMN register (should be read before FDES3) will be updated at the same time, the flag MS5_RFNE remains set, and a DMA request is generated again. Steps 4 and 5 are repeated.

DMA mode

DMA mode is supported for Rx FIFO reception when RFEN bit and DMAEN bit in CAN_CTL0 register are both set. When the DMA mode is enabled, the CPU must not read the Rx FIFO.

When DMA mode is enabled, Rx FIFO FDES0 to FDES3 words will be read by DMA controller when there is unread message in Rx FIFO, to get the received message. In this mode, Rx FIFO warning flag MS6_RFW bit and Rx FIFO overflow flag MS7_RFO bit in CAN_STAT register are reserved.

Before disabling DMA mode by clearing DMAEN bit in CAN_CTL0 register, a clear FIFO operation (when RFEN bit in CAN_CTL0 register is 1, set MS0 in the CAN_STAT register to 1 in Inactive mode) must be performed to clear the Rx FIFO contents. The act of clearing FIFO will clear MS5_RFNE bit in the CAN_STAT register, and cancel the DMA request.

Clear FIFO

when Rx FIFO is enabled (RFEN bit in CAN_CTL0 register is 1), set MS0 bit in the CAN_STAT register to 1 in Inactive mode will clear the Rx FIFO contents, while the Rx FIFO flags will not be cleared (except in DMA mode), thus before clearing FIFO operation, the Rx FIFO must be serviced until the flag MS5_RFNE in the CAN_STAT register is cleared.

Flag

Rx FIFO not empty

When MS5_RFNE bit in CAN_STAT register is 1, it means there is at least one frame available to be read from Rx FIFO.

Rx FIFO warning

When MS6_RFW bit in CAN_STAT register is 1, it means the number of unread messages within the Rx FIFO is increased to five from four due to the reception of a new one, the Rx FIFO is almost full.

Rx FIFO overflow

When MS7_RFO bit in CAN_STAT register is 1, it means there is an incoming message lost because the Rx FIFO is full.

Matching process

The matching process is searching for a Rx mailbox or Rx FIFO (when enabled) with an ID matching with the frame ID on CAN bus, also, the IDE and RTR field will participate in the

matching.

The matching process starts when completes the DLC field reception.

The matching of mailboxes is affected by the RPFQEN bit. If the RPFQEN bit is 0, the first mailbox to be matched is the match winner, regardless of whether it is free-to-receive or non-free-to-receive. If the RPFQEN bit is 1, the first free-to-receive mailbox matched is the winner or the last non-free-to-receive mailbox matched is the winner.

Searching process

- When the Rx FIFO is enabled, the RFO bit in CAN_CTL2 register gives the searching order.
  - If RFO bit is set to 1, matching process starts from Rx mailbox to Rx FIFO. The Rx mailbox is searched from the lowest number mailbox to the higher ones.
    Firstly, searching for a matching mailbox that is available for receiving. If the RPFQEN bit is 0, the first mailbox that matches is the winner, regardless of whether it is free-to-receive or non-free-to-receive. If the RPFQEN bit is 1, the first free-to-receive mailbox matched is the match winner. Rx FIFO is no longer searched in any of the above cases.
    Secondly, If the RPFQEN bit is 1 and no free-to-receive mailbox is matched, but a matching non-free-to-receive mailbox is found, then the Rx FIFO is also searched to determine the winner. when the Rx FIFO is matched and is not full, the Rx FIFO is the matching winner; otherwise, the matching winner is the last non-free-to-receive matched Rx mailbox(leading to mailbox CODE OVERRUN).
    Thirdly, if no matched Rx mailbox is found (means no free-to-receive matched mailbox, nor non-free-to-receive matched mailbox), then matching is processed on Rx FIFO. In this case, if the Rx FIFO is matched but it is full, it will leads to Rx FIFO overflow, while if the Rx FIFO is not matched (no matter it is full or not), the message will not be received.
  - If RFO bit is set to 0, matching process starts from Rx FIFO to Rx mailbox. If the Rx FIFO matches the searching conditions, and is not full, then the Rx FIFO is the matching winner, regardless of searching for mailboxes. If Rx FIFO does not match or it is full, then matching is processed on Rx mailbox. The matching of mailboxes is affected by the RPFQEN bit. If the RPFQEN bit is 0, the first mailbox to be matched is the match winner, regardless of whether it is free-to-receive or non-free-to-receive. If the RPFQEN bit is 1, the first free-to-receive mailbox matched is the winner. If no free-to-receive mailbox is found, the last non-free-to-receive mailbox matched is the winner.
- When the Rx FIFO is disabled, the matching process only searches the Rx mailboxes. Refer to the mailbox matching description above.

A free-to-receive Rx mailbox can be:

- For a data frame reception, or a remote frame reception when RRFRMS bit in CAN_CTL2 register is 1, it can be: A mailbox with CODE field EMPTY; A mailbox with CODE field FULL or OVERRUN, which has already been serviced (read) and unlocked.

- For a remote frame reception when RRFRMS bit in CAN_CTL2 register is 0, it can be a mailbox with CODE field RANSWER.

Searching conditions for matched Rx mailbox

Searching conditions for matched Rx mailbox, refers to ***Table 42-9. Rx mailbox matching***:

- When the frame in Rx shift buffer is a data frame (RTR field is 0), Rx mailbox with CODE EMPTY, FULL, and OVERRUN will be searched:
  - When IDERTR_RMF bit in CAN_CTL2 register is 0, it means the IDE field will be compared and RTR field will not be compared (regardless of bit 30 and bit 31 in related filter register). The ID field will be compared, using bit 0 to bit 28 filter data configurations in related filter register.
  - When IDERTR_RMF bit in CAN_CTL2 register is 1, it means all the IDE, RTR and ID fields will be compared, using bit 0 to bit 28, bit 30, bit 31 filter data configurations in related filter register.
- When the frame in Rx shift buffer is a remote frame (RTR field is 1):
  - If RRFRMS bit in CAN_CTL2 register is 0, it indicates that the Rx mailbox with CODE RANSWER will be searched, and the IDE, ID field will be compared, using bit 0 to bit 28, bit 30 filter data configurations in related filter register.
  - If RRFRMS bit in CAN_CTL2 register is 1, it indicates that the matching process is the same as a data frame, so Rx mailbox with CODE EMPTY, FULL, and OVERRUN will be searched:

    When IDERTR_RMF bit in CAN_CTL2 register is 0, it means the IDE field will be compared and RTR field will not be compared (regardless of bit 30 and bit 31 in related filter register). The ID field will be compared, using bit 0 to bit 28 filter data configurations in related filter register.

    When IDERTR_RMF bit in CAN_CTL2 register is 1, it means all the IDE, RTR and ID fields will be compared, using bit 0 to bit 28, bit 30, bit 31 filter data configurations in related filter register.

Table 42-9. Rx mailbox matching

Received bit	Configuration bit		Field in mailbox descriptor for matching			
RTR	IDERTR_RMF (in CAN_CTL2 register)	RRFRMS (in CAN_CTL2 register)	IDE	RTR	ID	CODE
0	0	-	Compared(1)	Never(2)	Filtered(3)	EMPTY / FULL / OVERRUN
	1		Filtered			EMPTY / FULL / OVERRUN
1	-	0	Compared	Never	Compared	RANSWER
	0	1	Compared	Never	Filtered	EMPTY / FULL / OVERRUN
	1		Filtered			EMPTY / FULL /

				OVERRUN

1. Compared: This field in Rx mailbox descriptor is always compared with the received bit, regardless of the filter data configurations in related filter register.
2. Never: This field in Rx mailbox descriptor is not compared with the received bit, regardless of the filter data configurations in related filter register.
3. Filtered: This field in Rx mailbox descriptor is compared with the received bit, using the filter data configurations in related filter register.

Searching conditions for matched Rx FIFO

Searching conditions for matched Rx FIFO, refers to ***Table 42-10. Rx FIFO matching***:

- If the FS[1:0] bits in CAN_CTL0 register is 0 or 1, it means A or B format of filter table is adopted, then all the IDE, RTR and ID fields will be compared, using bit 0 to bit 31 filter data configurations in related filter register.
- If the FS[1:0] bits in CAN_CTL0 register is 2, it means C format of filter table is adopted, then the IDE, RTR will not be compared (no these fields in FIFO descriptor) and ID fields will be compared, using bit 0 to bit 31 filter data configurations in related filter register.
- If the FS[1:0] bits in CAN_CTL0 register is 3, it means D format of filter table is adopted, then all frames are rejected.

Table 42-10. Rx FIFO matching

Configuration bit	Field in Rx FIFO descriptor for matching		
FS[1:0] (in CAN_CTL0 register)	IDE	RTR	ID
0	Filtered		
1	Filtered		
2	Never		Filtered
3	Not match(1)		

(1) Not match: All frames are rejected.

Shift-in

The shift-in process is the copy operation of the content from a Rx shift buffer (an internal mailbox descriptor) to a Rx mailbox or Rx FIFO that matched it.

When there is a matching descriptor found in the FIFO or in the Rx mailboxes, a shift-in process will be pending. The pending shift-in process starts to transfer when meets all of the following conditions:

- There is a matching winner for the frame in the Rx shift buffer.
- The CAN bus is in:
  - The second bit of Intermission field.
  - The first bit of an Overload frame.
- The target mailbox is not locked.

When the target mailbox of a pending shift-in process is unlocked during Inactive mode, the pending shift-in process starts to transfer. While if the unlocking occurs when LPS bit in CAN_CTL0 register is 1, the pending shift-in process will still be delayed until LPS bit changes to 0.

When the shift-in process is on-going, the BUSY bit (CODE[0]) of the target mailbox is set to indicate that the mailbox is being updated.

The shift-in process can be cancelled for a Rx mailbox, but can not be cancelled for the Rx FIFO. The shift-in process will be cancelled when matching one of the following situations:

- The target mailbox is inactivated after the CAN bus has reached the first bit of Intermission field next to the frame that carried the message and its matching process has finished.
- The Rx shift buffer receives a message transmitted by itself while the self reception is disabled by setting SRDIS bit in CAN_CTL0 register.
- There is a CAN protocol error.

When the shift-in process is done, Rx mailbox descriptor or Rx FIFO descriptor (if Rx FIFO is enabled) will be updated with the received message, and CAN_RFIFOIFMN will be updated if shift-in to the Rx FIFO, CODE field of Rx mailbox descriptor will be updated if shift-in to the Rx mailbox.

Filter data configuration

When Rx FIFO is disabled:

- If RPFQEN bit in CAN_CTL0 register is 0, then CAN_RMPUBF is used for all mailboxes.
- If RPFQEN bit in CAN_CTL0 register is 1, then CAN_RFIFOMPFx (x = 0..31) is used for mailboxes individually.

When Rx FIFO is enabled:

- If RPFQEN bit in CAN_CTL0 register is 0, then CAN_RMPUBF is used for all mailboxes, CAN_RFIFOPUBF and CAN_RFIFOMPFx (x = 0..31) are used for all the Rx FIFO ID filter table elements, and the value of these registers must be all the same.
- If RPFQEN bit in CAN_CTL0 register is 1, then CAN_RFIFOMPFx (x = 0..31) is used for the Rx FIFO ID filter table elements defined by RFFN[3:0] bits in CAN_CTL2 register and the mailboxes individually (because the Rx FIFO descriptor and the Rx mailbox descriptors can not occupy the same RAM space at the same time), CAN_RFIFOPUBF is used for the Rx FIFO ID filter table elements of the rest.

Self reception

When SRDIS bit in CAN_CTL0 register is 1, self reception is disabled, thus the frames transmitted by itself will not be received even if there is a matched Rx mailbox or Rx FIFO is matched, and no flag or interrupt will be generated. When the SRDIS bit is 0, it is allowed to receive a matching frame sent by itself.

42.3.7. Data reception in Pretended Networking mode

When PNEN bit and PNMOD bit in CAN_CTL0 register are configured to 1,the Pretended Networking mode is enabled, then the CAN is able to process received messages in MCU sleep mode. A wakeup event will wake up the CAN module from the Pretended Networking mode.

There are four groups of registers used for matched message storage: CAN_PN_RWMxCS, CAN_PN_RWMxI, CAN_PN_RWMxD0 and CAN_PN_RWMxD1 registers, group x from 0 to 3. Therefore, four messages can be stored at most (when NMM[7:0] bits in CAN_PN_CTL0 register is larger than or equal to 4), and only the latest messages will be stored. The group x indicates the message arrival order. If NMM[7:0] is less than 4, only NMM[7:0] value of messages can be stored, at groups from 0 to NMM[7:0] minus 1.

When the data length of the frame to be stored is less than 8 bytes, the padding values which continued to the received DATA field to be written to the CAN_PN_RWMxD0 and CAN_PN_RWMxD1 registers (x = 0..3) are zeroes. No timestamp is stored for wakeup matched frames.

Note: When in Pretended Networking mode, CAN FD format messages are ignored.

Wakeup interrupt

There are two types of wakeup interrupt events, including wakeup match event, and wakeup timeout event. Each interrupt event has a dedicated flag bit in the CAN_PN_STAT register, and a dedicated enable bit in CAN_PN_CTL0 register. The relationship is described in the ***Table 42-11. Interrupt events***.

An wakeup interrupt can be generated when any type of the wakeup interrupt event occurs and enabled.

Wakeup timeout event

When CAN reaches the timeout value, a wakeup timeout event will occur. The timeout is configured by WTO[15:0] bits in CAN_PN_TO register.

Note: Even if the timeout value is reached, CAN module will not stop the message filtering process until the CPU wakes up.

Wakeup match event

When CAN receives the matched wakeup frame/frames within the timeout, the wakeup match event will occur. MMCNT[7:0] bits in CAN_PN_STAT register reflects the number of matched messages from the time of entering Pretended Networking mode to the time the CPU wakes up.

Note: Even if CAN receives the matched wakeup frame/frames, the timeout counter will not stop counting until the CPU wakes up.

Frame matching

The fields of frame participate in the wakeup matching process are IDE, RTR, ID, DLC, and DATA field.

- When FFT[1:0] bit field in CAN_PN_CTL0 register is configured to 0, it means a wakeup match event occurs when a frame is received with all fields except DATA field, DLC field (that is IDE, RTR, and ID field matched) matched.
- When FFT[1:0] bit field in CAN_PN_CTL0 register is configured to 1, it means a wakeup match event occurs when a frame is received with all fields (that is IDE, RTR, ID, DLC, and DATA field matched) matched.
- When FFT[1:0] bit field in CAN_PN_CTL0 register is configured to 2, it means a wakeup match event occurs when a specified number (configured by NMM[7:0] bits in CAN_PN_CTL0 register) of frames are received with all fields except DATA field, DLC field (that is IDE, RTR, and ID field matched) matched.
- When FFT[1:0] bit field in CAN_PN_CTL0 register is configured to 2, it means a wakeup match event occurs when a specified number (configured by NMM[7:0] bits in CAN_PN_CTL0 register) of frames are received with all fields (that is IDE, RTR, ID, DLC, and DATA field matched) matched.

IDE field matching

The IDE field of a matched message is the same as the configured expected IDE field in CAN_PN_EID0 register, using filter data in CAN_PN_IFEID1 register.

RTR field matching

The RTR field of a matched message is the same as the configured expected RTR field in CAN_PN_EID0 register, using filter data in CAN_PN_IFEID1 register.

ID field matching

- When IDFT[1:0] bit field in CAN_PN_CTL0 register is configured to 0, it means the ID field of a matched message is the same as the configured expected ID field in CAN_PN_EID0 register, using filter data in CAN_PN_IFEID1 register.
- When IDFT[1:0] bit field in CAN_PN_CTL0 register is configured to 1, it means the ID field of a matched message is larger than or equal to the configured expected ID field in CAN_PN_EID0 register. CAN_PN_IFEID1 register is not used.
- When IDFT[1:0] bit field in CAN_PN_CTL0 register is configured to 2, it means the ID field of a matched message is smaller than or equal to the configured expected ID field in CAN_PN_EID0 register. CAN_PN_IFEID1 register is not used.
- When IDFT[1:0] bit field in CAN_PN_CTL0 register is configured to 3, it means the ID field of a matched message is larger than or equal to the configured expected ID field in CAN_PN_EID0 register, and is smaller than or equal to the configured expected ID field in CAN_PN_IFEID1 register.

DLC field matching

- The DLC field of a matched message is larger than or qual to the configured expected DLC low threshold DLCELT[3:0] in CAN_PN_EDLC register, and lower than or qual to the configured expected DLC high threshold DLCEHT[3:0] in CAN_PN_EDLC register.

DATA field matching

- When DATAFT[1:0] bit field in CAN_PN_CTL0 register is configured to 0, it means the DATA field of a matched message is the same as the configured expected DATA field in CAN_PN_EDLx (x = 0,1) registers, using filter data in CAN_PN_DF0EDH0 and CAN_PN_DF1EDH1 registers.
- When DATAFT[1:0] bit field in CAN_PN_CTL0 register is configured to 1, it means the DATA field of a matched message is larger than or equal to the configured expected DATA field in CAN_PN_EDLx (x = 0,1) registers. CAN_PN_DF0EDH0 and CAN_PN_DF1EDH1 registers are reserved.
- When DATAFT[1:0] bit field in CAN_PN_CTL0 register is configured to 2, it means the DATA field of a matched message is smaller than or equal to the configured expected DATA field in CAN_PN_EDLx (x = 0,1) registers. CAN_PN_DF0EDH0 and CAN_PN_DF1EDH1 registers are reserved.
- When DATAFT[1:0] bit field in CAN_PN_CTL0 register is configured to 3, it means the DATA field of a matched message is larger than or equal to the configured expected DATA field in CAN_PN_EDLx (x = 0,1) registers, and is smaller than or equal to the configured expected DATA field in CAN_PN_DF0EDH0 and CAN_PN_DF1EDH1 registers.

  Note: In this case, all the two 8 bytes of the expected data register should be configured, when the DLC of the received message (DLC field matched) is less than 8 bytes, then in DATA field matching, the data that matching with the expected data is the received DATA field plus the padding value zeros.

42.3.8. CAN FD operation

Both ISO CAN FD (ISO11898-1 specification) and non-ISO (Bosch CAN FD Specification V1.0) CAN FD protocols are supported, but they are incompatible with each other, so select the protocol by ISO bit in CAN_CTL2 register. In comparison to the non-ISO CAN FD protocol, a 3-bit counter and a parity bit are introduced in ISO CAN FD protocol. Thus the failure detection capability is improved for ISO CAN FD.

CAN FD mode supports both CAN classical frames and CAN FD frames. The FDF bit (the reserved bit in CAN classical frames) is used to distinguish between CAN classical and CAN FD format frames. When the FDF bit is recessive ‘1’, it is recognized as a CAN FD frame; otherwise, it is a classical frame. Compared with CAN classical frame, CAN FD frame does not support Rx FIFO, Rx FIFO DMA, and Pretended Networking function.

To enable CAN FD mode, set FDEN bit in CAN_CTL0 register to 1.

CAN FD BRS

In CAN FD mode, the data byte length is allowed up to 64 bytes for a CAN FD frame, and the bit time can switch to a higher speed of 8 Mbit/s for the Data Phase (from BRS bit to the first sample point of CRC Delimiter or to the starting of an error frame when an error condition is detected) of a CAN FD frame with BRS bit set (refer to ISO11898-1 or Bosch CAN FD Specification V1.0).

When BRSEN bit in CAN_FDCTL register is set to 1 (takes effect at the next message), and BRS bit in Tx mailbox is written as recessive '1', then higher bit time (called as data bit time) will be used for the Data Phase of CAN FD frame, the nominal bit time will be used for the rest of the bits. The bit time is changed at the sample point of the BRS bit. The data bit time is configured in CAN_FDBT register. The nominal bit time is configured in CAN_BT register.

When BRSEN bit in CAN_FDCTL register is set to 0, or when BRS bit in Tx mailbox is written as 0, then nominal bit time will be used for the entire CAN FD frame.

Note: The length of time quantum should be the same for the entire CAN FD frame, to reduce the possibilities of phase error frames on the CAN bus.

In FD frames, all nodes shall accept an up to two bit long dominant phase of overlapping ACK slot bits as a valid ACK, to compensate for phase shifts between the receivers. (Refer to ISO11898-1 specification)

CAN FD ESI

The transmission of ESI bit (the bit before DLC bits, refer to ISO11898-1 or Bosch CAN FD Specification V1.0) is defined by ESI field in MDES0 word of Tx mailbox and ERRSI[1:0] bits in CAN_ERR1 register. If ESI field in MDES0 is 0, it will transmit the dominant bit by error active nodes and transmit the recessive bit by error passive nodes according to ERRSI[1:0] bits in CAN_ERR1 register. If ESI field in MDES0 is 1, it will transmit ESI field in MDES0 word.

CAN FD CRC

Different CRC polynomials are used for different frame formats, results in a Hamming distance of 6:

- The CRC_15 polynomial is used for frames in CAN classical format: 0xC599
  $x^{15} + x^{14} + x^{10} + x^{8} + x^{7} + x^{4} + x^{3} + 1$
- The CRC_17 polynomial is used for frames in CAN FD format with DATA field no more than 16 bytes: 0x3685B
  $x^{17} + x^{16} + x^{14} + x^{13} + x^{11} + x^{6} + x^{4} + x^{3} + x^{1} + 1$
- The CRC_21 polynomial is used for frames in CAN FD format with DATA field more than 16 bytes: 0x302899
  $x^{21} + x^{20} + x^{13} + x^{11} + x^{7} + x^{4} + x^{3} + 1$

For transmission, these three types of CRC will all be calculated at the start of the frame, and the final CRC to be transmitted is determined by the FDF field and DLC field of the frame.

After a successful transmission, when corresponding MSx bit of CAN_STAT register is set, the CAN_CRCCFD register is updated at the same time, with the calculated CRC for both CAN FD and non-FD messages. The CAN_CRCC register only stores the calculated CRC for CAN classical format frames.

For reception, the CRC polynomial used for CRC check is determined by the received FDF and DLC field.

Note: In Classical frames, the CRC delimiter is one single recessive bit. In FD frames, the CRC delimiter may consist of one or two recessive bits. A transmitter shall send only one recessive bit as CRC delimiter, but it shall accept two recessive bits before the edge from recessive to dominant that starts the acknowledge slot. A receiver will send its acknowledge bit after the first CRC delimiter bit. Refer to ISO11898-1 specification.

Bit stuff

The bit stuffing in CAN FD format frames is different from that in CAN classical format frames.

For transmission of CAN FD format frames, a fixed stuff bit is inserted before the first bit of the CRC field (regardless of the bit stuff conditions), and other fixed stuff bits are inserted after each 4 bits of the CRC field (fixed stuff bits are not included). The value of these fixed stuff bits are the inverse value of their preceding bit. Refer to ISO11898-1 specification.

For reception of CAN FD format frames, the fixed stuff bits will be descarded. When the value of the fixed stuff bit is the same as the value of its preceding bit, a stuff error is detected.

Note: For CAN FD format frames, fixed stuff bits are included in CRC calculation. For CAN classical format frames, stuff bits are not included.

Resynchronization

Resynchronization and hard synchronization occur in CAN FD frames in the same way as in CAN classical frames. Resynchronization is not performed in transmitting the CAN FD data phase.

Transmitter delay compensation

The transmitter delay compensation is used for the data phase of CAN FD frames with BRS set, for the reason that in CAN FD frames with BRS bit set, the length of the CAN bit time in the data phase is shorter than the transmitter delay, thus the bit error check is influenced, the transmitter cannot receive its own transmitted bit latest at the sample point of that bit. The transmitter delay is measured from the falling edge of FDF bit of transmitted frame to the falling edge of FDF bit of received frame, shown in ***Figure 42-2. Transmitter delay***.

The transmitter delay compensation mechanism defines a secondary sample point SSP. When it is used, the transmitter shall ignore bit errors detected at the sample point. When TDCEN bit in CAN_FDCTL register is 1, this feature is enabled, then the bit check will be done between the actually received bit and the delayed transmitted bit (the delay is calculated

based on the measured transmitter delay).

The transmitter delay compensation value is calculated in the equation follows:

$$t_{compensation} = t_{measure} + t_{offset} \quad (42\text{-}1)$$

with

$$t_{offset} = TDCO[4:0] \times t_{CANCLK} \quad (42\text{-}2)$$

$$t'_{offset} = t_{PBS1_FD} + t_{PTS_FD} + t_{SYNC_SEG} \quad (42\text{-}3)$$

$$t_{PBS1_FD} = (DPBS1[2:0] + 1) \times t_{q_FD} \quad (42\text{-}4)$$

$$t_{PTS_FD} = DPTS[4:0] \times t_{q_FD} \quad (42\text{-}5)$$

$$t_{q_FD} = (DBAUDPSC[9:0] + 1) \times t_{CANCLK} \quad (42\text{-}6)$$

where the $t_{measure}$ is the measured transmitter delay, t_{offset} is the transmitter delay compensation offset which is saved in the TDCO[4:0] bits of CAN_FDCTL register in unit of t_{CANCLK}, t_{offset} should not be larger than the CAN data bit time. $t_{compensation}$ is the transmitter delay compensation value saved in TDCV[5:0] bits of CAN_FDCTL register in unit of t_{CANCLK}.

In the equations, the DPBS1[2:0] bits, DPTS[4:0] bits, DBAUDPSC[9:0] bits are all configured in CAN_FDBT register.

Figure 42-2. Transmitter delay

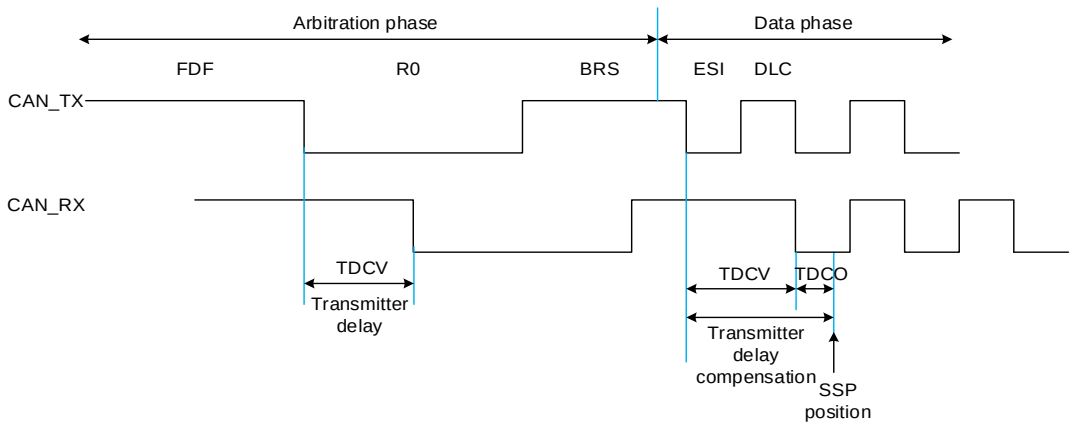

The maximum $t_{compensation}$ is (3 × data bit time - 2 × t_{q_FD}). When exceed this value, it is unable to compensate the transmitter delay, then TDCS bit in CAN_FDCTL register will be set. The implementation shall be able to compensate transmitter delays of at least two data bit times.

42.3.9. Errors and states

Transmit Error Counter (TECNT[7:0] bits in CAN_ERR0 register) and Receive Error Counter (RECNT[7:0] bits in the CAN_ERR0 register) take into account all errors in both CAN FD and non-FD messages, which get incremented or decremented according to the error condition. For detailed information about TECNT[7:0] and RECNT[7:0] management, please refer to the

CAN standard.

For CAN FD format frames, a Receive Error Counter for data phase of CAN FD messages (REFCNT[7:0] bits in the CAN_ERR0 register) and a Transmit Error Counter for data phase of CAN FD messages (TEFCNT[7:0] bits in the CAN_ERR0 register) are used additionally only when the BRS field of the frame is set. They stop counting and keep their values when in Bus off state, and they restart counting after returned to error active state by Bus off recovery.

Note: When in Pretended Networking mode, receive error counters keep counting and error flags are saved, transmit error counters stop counting and save their values. When returns to normal mode, the CAN_ERR0 and CAN_ERR1 registers will be updated with the counter value and saved error flags.

States

Error Passive State

If the value of TECNT[7:0] or RECNT[7:0] in CAN_ERR0 register increments to greater than 127, ERRSI[1:0] in CAN_ERR1 register is updated to 1 (error passive state).

Error Active state

If the node is in Error Passive state, and the value of either TECNT[7:0] or RECNT[7:0] in CAN_ERR0 register decrements to less than or equal to 127 when the other already satisfies this condition, ERRSI[1:0] in CAN_ERR1 register is updated to 0 (error active state).

Bus off state

If the value of TECNT[7:0] in CAN_ERR0 register becomes greater than 255, ERRSI[1:0] in CAN_ERR1 register is updated to 0b1x (Bus off state), and BOF bit in CAN_ERR1 register will be set, when BOIE bit in CAN_CTL1 register is set, an interrupt will be generated. The value of TECNT[7:0] will be reset to 0.

Bus off recovery:

To exit from Bus off state, the CAN has to wait for the recovery sequence specified in the CAN standard (128 occurrences of 11 consecutive recessive bits monitored on CAN RX). When TECNT[7:0] in CAN_ERR0 register reaches 128, ERRSI[1:0] in CAN_ERR1 register is updated to 0 (error active state) and both TECNT[7:0] and RECNT[7:0] in CAN_ERR0 register are reset to 0.

Depending on ABORDIS bit in CAN_CTL1 register, CAN will recover from Bus off automatically or remain in Bus off state.

When ABORDIS is 0, enable automatic bus off recovery, CAN wil recover from Bus off automatically after the recovery sequence. If the ABORDIS is changed to 0 after the recovery sequence, then CAN will resynchronize to the bus by detecting 11 consecutive recessive bits.

When ABORDIS is 1, not enable automatic bus off recovery. If the ABORDIS is changed to 1 after the CAN entered Bus off state, automatic bus off recovery will be disabled at the next time the CAN entered Bus off state.

Bus integration state

If the node starts the protocol operation during Bus off recovery, or detects the protocol exception event (the event occurs when FDEN bit in CAN_CTL0 register is set to 0, and a FDF bit of a FD frame is received), the node enters the bus integration state. In this state, the synchronicity to the CAN bus is lost. CAN node can leave the bus integration state when the bus idle condition (the sequence of 11 consecutive recessive bits) is detected. Refer to the CAN Protocol standard (ISO 11898-1).

The protocol exception detection is controlled by PREEN bit in CAN_CTL2 register.

The edge filtering can be configured by EFDIS bit in CAN_CTL2 register, which is used during the bus integration state. When the edge filtering is enabled, two consecutive nominal time quanta with dominant bus state are required to detect an edge that causes synchronization. When synchronization occurs, the counting for bus idle condition (the sequence of 11 consecutive recessive bits) is restarted. When edge filtering is performed, dominant bus-states shorter than a nominal bit time (the bits in data phase of a FD frame) will be ignored, stopped from being mistaken for an idle condition. Refer to the CAN Protocol standard (ISO 11898-1).

Errors

If at least one of the error flags (ACKERR, BRERR, BDERR, CRCERR, FMERR, and STFERR bit in CAN_ERR1 register) is set, ERRSF bit in CAN_ERR1 register will be set. If ERRSIE bit in CAN_CTL1 register is set, an error interrupt will be generated.

If at least one of the error flags (BRFERR, BDFERR, CRCFERR, FMFERR, and STFFERR bit in CAN_ERR1 register) is set, ERRFSF bit in CAN_ERR1 register will be set. If ERRFSIE bit in CAN_CTL2 register is set, an error interrupt will be generated for errors detected in CAN FD frame data phase with BRS bit set.

Acknowledge error

If there is only one node operating, then it will lead to TECNT[7:0] in CAN_ERR0 register incrementing (to 128 at most by acknowledge error) in each message transmission, and an acknowledge error will occur, which is indicated by ACKERR bit in the CAN_ERR1 register.

Bit recessive error

When at least one bit sent as recessive ‘1’ is received as dominant ‘0’, a bit recessive error occurs. Refers to BRFERR and BRERR bit in CAN_ERR1 register.

Bit dominant error

When at least one bit sent as dominant ‘0’ is received as recessive ‘1’, a bit dominant error

occurs. Refers to BDFERR and BDERR bit in CAN_ERR1 register.

CRC error

When the calculated CRC is different from the received CRC field of the frame, a CRC error occurs. Refers to CRCFERR and CRCERR bit in CAN_ERR1 register.

Form error

When a fixed-form bit field contains at least one illegal bit, a form error occurs. Refers to FMFERR and FMERR bit in CAN_ERR1 register.

Stuff error

Refers to STFFERR and STFERR bit in CAN_ERR1 register.

42.3.10. Communication parameters

Bit time

The CAN bit time from the CAN protocol has three segments as follows:

Synchronization segment (SYNC_SEG): A bit change is expected to occur within this time segment. It has a fixed length of one time quantum ($1 \times t_q$).

Bit segment 1 (BS1): It defines the location of the sample point. It includes the Propagation segment and Phase buffer segment 1 in the CAN standard. It may be automatically lengthened to compensate for positive phase drifts due to different frequency of the various nodes of the network.

Bit segment 2 (BS2): It defines the location of the sample point. It may also be automatically shortened to compensate for negative phase drifts. Its duration should programmed no less than 2 time quanta.

Note: The bit time configuration ranges must be in compliance with the CAN Protocol standard (ISO 11898-1).

CAN bit time is shown as in the ***Figure 42-3. CAN bit time***.

Figure 42-3. CAN bit time

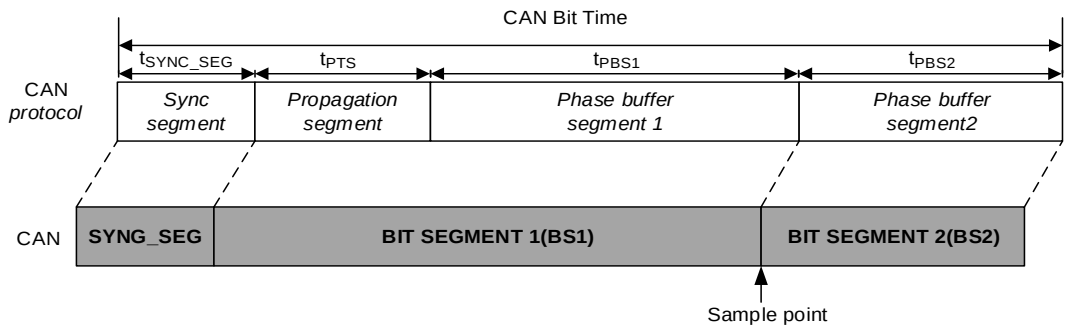

Synchronization Jump Width (SJW): It can be lengthened or shortened to compensate for the Synchronization error of the CAN network node. It is configured by SJW[4:0] bits in CAN_BT register for nomainal bit time, or configured by DSJW[2:0] bits in CAN_FDBT register for data bit time.

A valid edge is defined as the first toggle in a bit time from dominant to recessive bus level before the controller sends a recessive bit.

If a valid edge is detected in BS1, not in SYNC_SEG, BS1 is added with up to SJW maximumly, so that the sample point is delayed.

Conversely, if a valid edge is detected in BS2, not in SYNC_SEG, BS2 is cut down with up to SJW maximumly, so that the transmit point is moved earlier.

Bit sampling

BSPMOD in CAN_CTL1 register defines the sampling mode of CAN bits at the Rx input pin.

When BSPMOD is 0, only one sample (the sample point) is used.

When BSPMOD is 1, three samples are used to determine the received bit value, that is the one on the sample point, and the two preceding samples.

Note: This bit cannot be set when CAN FD is enabled.

Baudrate

CAN module has two clock domains:

- The clock of Control Interface and CAN registers derives from the APB2 clock.
- The clock of Protocol controller (CANCLK) can be configured by CANxSEL[1:0] bit in RCU_CFG2 register, to derive from oscillator clock, or APB2 clock, or APB2 clock devided by 2, or IRC8M internal clock.

The CAN calculates its baudrate as follows:

$$\text{BaudRate} = \frac{1}{\text{CAN Bit Time}} \quad (42\text{-}7)$$

$$\text{CAN Bit Time} = t_{SYNC_SEG} + t_{PTS} + t_{PBS1} + t_{PBS2} \quad (42\text{-}8)$$

with

$$t_{SYNC_SEG} = 1 \times t_q \quad (42\text{-}9)$$

$$t_{PTS} = (N_{PTS} + 1) \times t_q \text{ or } t_{PTS} = N_{DPTS} \times t_q \quad (42\text{-}10)$$

$$t_{PBS1} = (N_{PBS1} + 1) \times t_q \quad (42\text{-}11)$$

$$t_{PBS2} = (N_{PBS2} + 1) \times t_q \quad (42\text{-}12)$$

$$t_q = (N_{BAUDPSC} + 1) \times t_{CANCLK} \quad (42\text{-}13)$$

In the equations, for nominal bit rate:

N_{PTS}, N_{PBS1}, N_{PBS2}, and $N_{BAUDPSC}$ are configured by the PTS[5:0] bits, PBS1[4:0] bits, PBS2[4:0] bits, and BAUDPSC[9:0] bits respectively in CAN_BT register.

For data bit rate:

N_{DPTS}, N_{PBS1}, N_{PBS2}, and $N_{BAUDPSC}$ are configured by the DPTS[4:0] bits, DPBS1[2:0] bits, DPBS2[2:0] bits, and DBAUDPSC[9:0] bits respectively in CAN_FDBT register.

Timestamp

A 16-bit internal counter of the CAN hardware in CAN_TIMER register is used to generate the timestamp value. The value of the internal counter is sampled at SOF field on the CAN bus, and is written into the TIMESTAMP field of MDES0 or FDES0 word after a successful reception or transmission of a message.

The counter does not count in Inactive mode, or when LPS bit in CAN_CTL0 register is 1.

Counter clock source

When ITSRC bit in CAN_CTL2 register is 1, the internal counter clock source is selected to TRIGSEL output CANx_EX_TIME_TICK, while the frequency must be synchronous to CANCLK.

When ITSRC bit in CAN_CTL2 register is 0, the internal counter clock source is selected to the CAN baudrate, it increments by one for each bit that is received or transmitted. When there is no message on the bus, it is counted with the baudrate programmed previously.

Time synchronization

If TSYNC bit in CAN_CTL1 register is 1, a SYNC message reception in the first mailbox descriptor will reset the internal counter for network time synchronization.

42.3.11. Interrupts

The CAN interrupt events and flags are list in ***Table 42-11. Interrupt events***.

Table 42-11. Interrupt events

<table>
<tr><th colspan="2" rowspan="2">Interrupt event</th><th colspan="2">Flag</th><th colspan="4">Enable control</th></tr>
<tr><th colspan="2">Bit</th><th>Register</th><th>Enable bit</th><th>Control bit</th><th>Enable register</th><th>Control register</th></tr>
<tr><td colspan="2">Bus off</td><td colspan="2">BOF</td><td rowspan="13">CAN_ERR1</td><td colspan="2">BOIE</td><td colspan="2">CAN_CTL1</td></tr>
<tr><td colspan="2">Bus off recovery</td><td colspan="2">BORF</td><td colspan="2">BORIE</td><td colspan="2">CAN_CTL2</td></tr>
<tr><td rowspan="6">Error summary</td><td>Bit recessive error</td><td rowspan="6">ERRSF</td><td>BRERR</td><td colspan="2" rowspan="6">ERRSIE</td><td colspan="2" rowspan="6">CAN_CTL1</td></tr>
<tr><td>Bit dominant error</td><td>BDERR</td></tr>
<tr><td>ACK error</td><td>ACKERR</td></tr>
<tr><td>CRC error</td><td>CRCERR</td></tr>
<tr><td>Form error</td><td>FMERR</td></tr>
<tr><td>Stuff error</td><td>STFERR</td></tr>
<tr><td rowspan="6">Error summary for FD frames with data bit time</td><td>Bit recessive error</td><td rowspan="6">ERRFSF</td><td>BRFERR</td><td colspan="2" rowspan="6">ERRFSIE</td><td colspan="2" rowspan="6">CAN_CTL2</td></tr>
<tr><td>Bit dominant error</td><td>BDFERR</td></tr>
<tr><td>CRC error</td><td>CRCFERR</td></tr>
<tr><td>Form error</td><td>FMFERR</td></tr>
<tr><td>Stuff error</td><td>STFFERR</td></tr>
<tr><td colspan="2" rowspan="2">Tx error warning</td><td colspan="2" rowspan="2">TWERRIF</td><td>TWERRIE</td><td rowspan="2">WERREN</td><td rowspan="2">CAN_CTL1</td><td rowspan="2">CAN_CTL0</td></tr>
<tr><td>RWERRIE</td></tr>
<tr><td colspan="2">Rx error warning</td><td colspan="2">RWERRIF</td><td colspan="2" rowspan="2">WMIE</td><td colspan="2" rowspan="2">CAN_PN_CTL0</td></tr>
<tr><td colspan="2">Wakeup match</td><td colspan="2">WMS</td><td rowspan="2">CAN_PN_STAT</td></tr>
<tr><td colspan="2">Wakeup timeout</td><td colspan="2">WTOS</td><td colspan="2">WTOIE</td></tr>
<tr><td colspan="2" rowspan="2">Mailbox successful transmission or reception</td><td colspan="2">All bits</td><td rowspan="5">CAN_STAT</td><td>All bits</td><td>RFEN = 0</td><td rowspan="5">CAN_INTEN</td><td rowspan="5">CAN_CTL0</td></tr>
<tr><td colspan="2">MSx</td><td>MIEx</td><td>RFEN = 1</td></tr>
<tr><td colspan="2">Rx FIFO not empty</td><td colspan="2">MS5_RFNE</td><td>MIE5</td><td rowspan="3">RFEN = 1 & DMAEN = 0</td></tr>
<tr><td colspan="2">Rx FIFO warning</td><td colspan="2">MS6_RFW</td><td>MIE6</td></tr>
<tr><td colspan="2">Rx FIFO overflow</td><td colspan="2">MS7_RFO</td><td>MIE7</td></tr>
</table>

42.4. Example for a typical configuration flow of CAN

After power-on reset or system reset, the following operation flow is a typical process for application to configure and run CAN:

- Configure CAN module clock source CANCLK, and enable CAN clock
  Configure CANxSEL[1:0] bits in CAN_CFG2 register to select the CAN module clock source. Program the RCU_APB2EN register to enable the CAN module clock.
- Setup the communication interface
  Configure GPIO and AFIO module to select PADs to alternate functions.
- Enter Inactive mode
  Because INAMOD bit, HALT bit, NRDY bit and INAS bit are default set after power-on

reset or system reset, so CAN will automatically enters Inactive mode for configuration of CAN registers.

- Service the flags in CAN_STAT register

  Read the Rx mailbox or Rx FIFO descriptor contents, clear the corresponding asserted flag bit in CAN_STAT register, then read the CAN_TIMER register at last for a complete flag bit service. If Rx FIFO is enabled, do a clearing FIFO operation by setting MS0 bit in CAN_STAT register to 1. Also clear the asserted flags by Tx mailboxes.

- Initialize the physical memory space for mailbox and Rx FIFO descriptors

  Configure memory space for mailbox and Rx FIFO descriptors totally by MSZ[4:0] bits in CAN_CTL0 register.

- Configure the communication parameters

  1) Configure the CAN nominal bit rate by PTS[5:0] bits, PBS1[4:0] bits, PBS2[4:0] bits, SJW[4:0] bits and BAUDPSC[9:0] bits in CAN_BT register.

  2) Configure bit sampling mode by BSPMOD bit in CAN_CTL1 register if needed.

  3) Configure PREEN bit and EFDIS bit for bus integration state if needed.

- Configure the control parameters for transmission

  1) Configure arbitration priority by MTO bit in CAN_CTL1 register and LAPRIOEN bit in CAN_CTL0 register.

  2) Configure arbitration start delay by ASD[4:0] bits of CAN_CTL2 register if needed.

  3) Enable transmission abort function for Tx mailbox descriptor configuration by MST bit in CAN_CTL0 register.

- Configure the control parameters for reception

  1) Choose whether use Rx FIFO and Rx FIFO DMA for reception or not by RFEN bit and DMAEN bit in CAN_CTL0 register.

  2) Configure Rx private filter & Rx mailbox queue feature by RPFQEN bit in CAN_CTL0 register.

  3) Configure receive filter related parameters by RFO bit, RRFRMS bit and IDERTR_RMF bit of CAN_CTL2 register.

  4) Configure filter data of the Rx mailbox and Rx FIFO by CAN_RMPUBF, CAN_RFIFOPUBF and CAN_RFIFOMPFx (x = 0..31) registers. If Rx FIFO is enabled, configure Rx FIFO ID filter table element format by FS[1:0] bits of CAN_CTL0 register, configure Rx FIFO ID filter table element number by RFFN[3:0] bits of CAN_CTL2 register.

- If CAN FD operation is needed

  1) Select CAN FD operation protocol by ISO bit in CAN_CTL2 regitser.

  2) Enable CAN FD operation by FDEN bit in CAN_CTL0 register.

  3) Initialize the mailbox data size by MDSZ[1:0] bits of CAN_FDCTL register.

  4) Configure CAN FD related transmitter delay compensation feature by TDCEN bit and TDCO[4:0] bits of CAN_FDCTL register if needed.

  5) Configure the CAN data bit rate by DPTS[4:0] bits, DPBS1[2:0] bits, DPBS2[2:0] bits DSJW[2:0] bits and DBAUDPSC[9:0] bits in CAN_FDBT register.

- Configure interrupts

  Enable the needed interrupts in CAN_CTL0, CAN_CTL1, CAN_CTL2 and CAN_INTEN registers.

- Initialize the Tx / Rx mailbox descriptors

  1) If message transmission is needed, initialize the Tx mailbox descriptors.

  2) If message reception is needed, initialize the Rx mailbox descriptors, if Rx FIFO is enabled, also initialize the Rx FIFO descriptors including the ID filter table elements.
- If Pretended Networking mode is required, set PNEN bit and PNMOD bit in CAN_CTL0 register and configure the necessary registers for wakeup.
- Exit Inactive mode

  Clear HALT bit in CAN_CTL0 register to exit Inactive mode, and CAN starts to synchronize to the CAN bus.

42.5. CAN registers

CAN0 base address: 0x4001 A000

CAN1 base address: 0x4001 B000

CAN2 base address: 0x4001 C000

42.5.1. Control register 0 (CAN_CTL0)

Address offset: 0x00
Reset value: 0x5900 000F

All bits except bit 30, 28, 25, 19 of this register should be configured in Inactive mode only, because they are blocked by hardware in other modes.

All bits except bit 31, 27, 24, 20 of this register will be reset by software reset bit SWRST in CAN_CTL0 register.

This register has to be accessed by word(32-bit).

31	30	29	28	27	26	25	24	23	22	21	20	19	18	17	16
CANDIS	INAMOD	RFEN	HALT	NRDY	Reserved	SWRST	INAS	Reserved		WERREN	LPS	PNEN	PNS	SRDIS	RPFQEN
rw	rw	rw	rw	r		rw	r			rw	r	rw	r	rw	rw

15	14	13	12	11	10	9	8	7	6	5	4	3	2	1	0
DMAEN	PNMOD	LAPRIOEN	MST	FDEN	Reserved	FS[1:0]		Reserved			MSZ[4:0]				
rw	rw	rw	rw	rw		rw					rw				

Bits	Fields	Descriptions
31	CANDIS	CAN disable This bit is not affected by software reset bit SWRST in CAN_CTL0 register. 0: Enable CAN module 1: Disable CAN module
30	INAMOD	Inactive mode enable 0: Disable Inactive mode 1: Enable Inactive mode
29	RFEN	Rx FIFO enable 0: Disable Rx FIFO 1: Enable Rx FIFO
28	HALT	Halt CAN 0: No enter Inactive mode request 1: Enter Inactive mode if the INAMOD bit in CAN_CTL0 register is set
27	NRDY	Not ready

		This bit indicates the state of whether the Protocol controller clock is disabled or not. When in Inactive mode, or in CAN_Disable mode, the Protocol controller clock is disabled, and CAN is not ready. 0: CAN is ready 1: CAN is not ready
26	Reserved	Must be kept at reset value.
25	SWRST	Software reset When this bit is set, CAN internal state machines and CAN registers will be reset. This bit is automitically cleared by hardware when software reset is completed. Software reset has no effect when LPS bit in CAN_CTL0 register is set. 0: No effect 1: Software reset request
24	INAS	Inactive mode state 0: Not in Inactive mode 1: In Inactive mode
23:22	Reserved	Must be kept at reset value.
21	WERREN	Error warning enable When this bit is set, the warning interrupt flag TWERRIF and RWERRIF bit in CAN_ERR1 register will be enabled to reflect the state change of TWERRF and RWERRF bit in CAN_ERR1 register respectively. 0: Disable Tx and Rx error warining 1: Enable Tx and Rx error warining
20	LPS	Low power state 0: Not in low power state 1: In low power state
19	PNEN	Pretended Networking mode enable 0: Disable Pretended Networking mode 1: Enable Pretended Networking mode
18	PNS	Pretended Networking state 0: Not in Pretended Networking state 1: In Pretended Networking state
17	SRDIS	Self reception disable 0: Enable self reception 1: Disable self reception
16	RPFQEN	Rx private filters enable & Rx mailbox queue enable 0: Disable Rx private filters & disable Rx mailbox queue 1: Enable Rx private filters & enable Rx mailbox queue
15	DMAEN	DMA enable

		0: DMA feature for RX FIFO disabled. 1: DMA feature for RX FIFO enabled.
14	PNMOD	Pretended Networking mode selection 0: Not select Pretended Networking mode 1: Select Pretended Networking mode
13	LAPRIOEN	Local arbitration priority enable 0: Disable local arbitration priority 1: Enable local arbitration priority
12	MST	Mailbox stop transmission 0: Disable transmission abort 1: Enable transmission abort
11	FDEN	CAN FD operation enable 0: Disable CAN FD operation 1: Enable CAN FD operation
10	Reserved	Must be kept at reset value.
9:8	FS[1:0]	Format selection This bit field defines the format of the Rx FIFO ID filter table elements. 00: Format A: One full ID (standard and extended) per ID filter table element 01: Format B: Two full standard IDs or two partial 14-bit extended IDs per ID filter table element 10: Format C: Four partial 8-bit IDs (standard and extended) per ID filter table element 11: Format D: All frames rejected
7:5	Reserved	Must be kept at reset value.
4:0	MSZ[4:0]	Memory size This bit field defines the maximum size of memory for message transmission and reception. The size is counted in uint of 4 words (equals to the size of a mailbox descriptor with 8-byte data), including mailbox and Rx FIFO. Before configuring this bit field, the flags in CAN_STAT register must be serviced. 00000: 1 unit 00001: 2 units … 11111: 32 units

42.5.2. Control register 1 (CAN_CTL1)

Address offset: 0x04
Reset value: 0x0000 0000

The bits 12, 7, 5, 4, 3 of this register should be configured in Inactive mode only, because

they are blocked by hardware in other modes.

All bits of this register are not affected by software reset bit SWRST in CAN_CTL0 register.

This register has to be accessed by word(32-bit).

31	30	29	28	27	26	25	24	23	22	21	20	19	18	17	16
Reserved															

15	14	13	12	11	10	9	8	7	6	5	4	3	2	1	0
BOIE	ERRSIE	Reserved	LSCMOD	TWERRIE	RWERRIE	Reserved		BSPMOD	ABORDIS	TSYNC	MTO	MMOD	Reserved		
rw	rw		rw	rw	rw			rw	rw	rw	rw	rw			

Bits	Fields	Descriptions
31:16	Reserved	Must be kept at reset value.
15	BOIE	Bus off interrupt enable 0: Disable Bus off interrupt 1: Enable Bus off interrupt
14	ERRSIE	Error summary interrupt enable 0: Disable error summary interrupt 1: Enable error summary interrupt
13	Reserved	Must be kept at reset value.
12	LSCMOD	Loopback and silent communication mode 0: Disable loopback and silent communication mode 1: Enable loopback and silent communication mode **Note:** In this mode, SRDIS bit in CAN_CTL0 register, and TDCEN in CAN_FDCTL register cannot be set.
11	TWERRIE	Tx error warning interrupt enable This bit can be written only when WERREN in CAN_CTL0 register is 1. This bit is read as zero when WERREN in CAN_CTL0 register is 0. 0: Disable Tx error warning interrupt 1: Enable Tx error warning interrupt
10	RWERRIE	Rx error warning interrupt enable This bit can be written only when WERREN in CAN_CTL0 register is 1. This bit is read as zero when WERREN in CAN_CTL0 register is 0. 0: Disable Rx error warning interrupt 1: Enable Rx error warning interrupt
9:8	Reserved	Must be kept at reset value.
7	BSPMOD	Bit sampling mode 0: One sample for the received bit 1: Three samples for the received bit

6	ABORDIS	Automatic Bus off recovery not enable 0: Enable automatic Bus off recovery 1: Not enable automatic Bus off recovery
5	TSYNC	Time synchronization enable 0: Disable time synchronization 1: Enable time synchronization
4	MTO	Mailbox transmission order 0: Highest priority mailbox is transmitted first 1: Lowest number mailbox is transmitted first
3	MMOD	Monitor mode 0: Disable Monitor mode 1: Enable Monitor mode
2:0	Reserved	Must be kept at reset value.

42.5.3. Timer register (CAN_TIMER)

Address offset: 0x08
Reset value: 0x0000 0000

This register has to be accessed by word(32-bit).

31	30	29	28	27	26	25	24	23	22	21	20	19	18	17	16
Reserved															

15	14	13	12	11	10	9	8	7	6	5	4	3	2	1	0
CNT[15:0]															
rw															

Bits	Fields	Descriptions
31:16	Reserved	Must be kept at reset value.
15:0	CNT[15:0]	Counter value This bit field contains the internal counter value used for timestamp generation.

42.5.4. Receive mailbox public filter register (CAN_RMPUBF)

Address offset: 0x10
Reset value: 0xXXXX XXXX

This register is located in RAM.

All bits of this register should be configured in Inactive mode only, because they are blocked by hardware in other modes.

This register has to be accessed by word(32-bit).

31	30	29	28	27	26	25	24	23	22	21	20	19	18	17	16
MFD31	MFD30	MFD29	MFD28	MFD27	MFD26	MFD25	MFD24	MFD23	MFD22	MFD21	MFD20	MFD19	MFD18	MFD17	MFD16
rw	rw	rw	rw	rw	rw	rw	rw	rw	rw	rw	rw	rw	rw	rw	rw

15	14	13	12	11	10	9	8	7	6	5	4	3	2	1	0
MFD15	MFD14	MFD13	MFD12	MFD11	MFD10	MFD9	MFD8	MFD7	MFD6	MFD5	MFD4	MFD3	MFD2	MFD1	MFD0
rw	rw	rw	rw	rw	rw	rw	rw	rw	rw	rw	rw	rw	rw	rw	rw

Bits	Fields	Descriptions
31:0	MFDx	Mailbox filter data MFD31 bit is used to filter the mailbox descriptor RTR field. MFD30 bit is used to filter the mailbox descriptor IDE field. MFDx (x = 0..28) bits are used to filter the mailbox descriptor ID field. 0: The bit is "don't care" 1: The bit is checked

42.5.5. Error register 0 (CAN_ERR0)

Address offset: 0x1C

Reset value: 0x0000 0000

All bits of this register are read-only except in Inactive mode.

This register has to be accessed by word(32-bit).

31	30	29	28	27	26	25	24	23	22	21	20	19	18	17	16
REFCNT[7:0]								TEFCNT[7:0]							
rw0								rw0							

15	14	13	12	11	10	9	8	7	6	5	4	3	2	1	0
RECNT[7:0]								TECNT[7:0]							
rw								rw							

Bits	Fields	Descriptions
31:24	REFCNT[7:0]	Receive error counter for data phase of FD frames with BRS bit set This bit field can only be written as zero in Inactive mode.
23:16	TEFCNT[7:0]	Transmit error count for the data phase of FD frames with BRS bit set This bit field can only be written as zero in Inactive mode.
15:8	RECNT[7:0]	Receive error count defined by the CAN standard
7:0	TECNT[7:0]	Transmit error count defined by the CAN standard

42.5.6. Error register 1 (CAN_ERR1)

Address offset: 0x20

Reset value: 0x000X 000X

This register has to be accessed by word(32-bit).

31	30	29	28	27	26	25	24	23	22	21	20	19	18	17	16
BRFERR	BDFERR	Reserved	CRCFERR	FMFERR	STFFERR	Reserved				ERROVR	ERRFSF	BORF	SYN	TWERRIF	RWERRIF
rc	rc		rc	rc	rc					rc_w1	rc_w1	rc_w1	r	rc_w1	rc_w1

15	14	13	12	11	10	9	8	7	6	5	4	3	2	1	0
BRERR	BDERR	ACKERR	CRCERR	FMERR	STFERR	TWERRF	RWERRF	IDLEF	TS	ERRSI[1:0]		RS	BOF	ERRSF	Reserved
rc	rc	rc	rc	rc	rc	r	r	r	r	r		r	rc_w1	rc_w1	

Bits	Fields	Descriptions
31	BRFERR	Bit recessive error in data phase of FD frames with the BRS bit set 0: No error occurrence 1: At least one bit sent as recessive is received as dominant
30	BDFERR	Bit dominant error in data phase of FD frames with the BRS bit set 0: No error occurrence 1: At least one bit sent as dominant is received as recessive
29	Reserved	Must be kept at reset value.
28	CRCFERR	CRC error in data phase of FD frames with the BRS bit set 0: No error occurrence 1: A CRC error occurred
27	FMFERR	Form error in data phase of FD frames with the BRS bit set 0: No error occurrence 1: A form error occurred
26	STFFERR	Stuff error in data phase of FD frames with the BRS bit set 0: No error occurrence 1: A stuff error occurred
25:22	Reserved	Must be kept at reset value.
21	ERROVR	Error overrun This bit indicates that an error condition occurred when any error flag is already set. 0: Error overrun not occurred 1: Error overrun occurred
20	ERRFSF	Error summary flag for data phase of FD frames with BRS bit set This bit is logical ORed by the following bits: CAN_ERR1[31]: Bit recessive error CAN_ERR1[30]: Bit dominant error CAN_ERR1[28]: CRC error CAN_ERR1[27]: Form error CAN_ERR1[26]: Stuff error
19	BORF	Bus off recovery flag

		This bit is set when the the recovery sequence specified in the CAN standard on the CAN bus is detected and CAN is ready to recovery from Bus off. 0: No event occurrence 1: Bus off recovery sequence event occurs
18	SYN	Synchronization flag 0: Not synchronized to the CAN bus 1: Synchronized to the CAN bus
17	TWERRIF	Tx error warning interrupt flag This bit is not used during Bus off state. 0: No event occurrence 1: TWERRF bit in CAN_ERR1 register changes from 0 to 1
16	RWERRIF	Rx error warning interrupt flag This bit is updated when exiting from Pretended Networking mode. 0: No event occurrence 1: RWERRF bit in CAN_ERR1 register changes from 0 to 1
15	BRERR	Bit recessive error for all format frames This bit is updated when exiting from Pretended Networking mode. 0: No error occurrence 1: At least one bit sent as recessive is received as dominant
14	BDERR	Bit dominant error for all format frames This bit is updated when exiting from Pretended Networking mode. 0: No error occurrence 1: At least one bit sent as dominant is received as recessive
13	ACKERR	ACK error This bit is updated when exiting from Pretended Networking mode. 0: No error occurrence 1: An ACK error occurred
12	CRCERR	CRC error This bit is updated when exiting from Pretended Networking mode. 0: No error occurrence 1: A CRC error occurred
11	FMERR	Form error This bit is updated when exiting from Pretended Networking mode. 0: No error occurrence 1: A form error occurred
10	STFERR	Stuff error This bit is updated when exiting from Pretended Networking mode. 0: No error occurrence 1: A stuffing error occurred

9	TWERRF	Tx error warning flag 0: No event occurrence 1: TECNT[7:0] in CAN_ERR0 register is greater than or equal to 96
8	RWERRF	Rx error warning flag This bit is updated when exiting from Pretended Networking mode. 0: No event occurrence. 1: RECNT[7:0] in CAN_ERR0 register is greater than or equal to 96
7	IDLEF	IDLE flag 0: No event occurrence 1: In Bus idle state
6	TS	Transmitting state 0: CAN is not working in transmitting state 1: CAN is working in transmitting state
5:4	ERRSI[1:0]	Error state indicator When MMOD bit in CAN_CTL1 register and SWRST bit in CAN_CTL0 register are both set to 1, this bit will be reset for one CAN bit time, and then changes to 0b01 to reflect Monitor mode state. 00: Error active 01: Error passive 1x: Bus off
3	RS	Receiving state 0: CAN is not working in receiving state 1: CAN is working in receiving state
2	BOF	Bus off flag 0: No event occurrence 1: In Bus off state
1	ERRSF	Error summary flag This bit is logical ORed by the following bits: CAN_ERR1[15]: Bit recessive error CAN_ERR1[14]: Bit dominant error CAN_ERR1[13]: ACK error CAN_ERR1[12]: CRC error CAN_ERR1[11]: Form error CAN_ERR1[10]: Stuff error
0	Reserved	Must be kept at reset value.

42.5.7. Interrupt enable register (CAN_INTEN)

Address offset: 0x28

Reset value: 0x0000 0000

This register has to be accessed by word(32-bit).

31	30	29	28	27	26	25	24	23	22	21	20	19	18	17	16
MIE31	MIE30	MIE29	MIE28	MIE27	MIE26	MIE25	MIE24	MIE23	MIE22	MIE21	MIE20	MIE19	MIE18	MIE17	MIE16
rw	rw	rw	rw	rw	rw	rw	rw	rw	rw	rw	rw	rw	rw	rw	rw

15	14	13	12	11	10	9	8	7	6	5	4	3	2	1	0
MIE15	MIE14	MIE13	MIE12	MIE11	MIE10	MIE9	MIE8	MIE7	MIE6	MIE5	MIE4	MIE3	MIE2	MIE1	MIE0
rw	rw	rw	rw	rw	rw	rw	rw	rw	rw	rw	rw	rw	rw	rw	rw

Bits	Fields	Descriptions
31:0	MIEx	Message transmission and reception interrupt enable When Rx FIFO is disabled, these bits are used for mailbox number x (refers to ***Mailbox number***) interrupt configuration. When Rx FIFO is enabled, MIE5 to MIE7 are used for Rx FIFO interrupt configuration, and mailbox interruption configuration bits are the bits x that are the same with the mailbox number x (refers to ***Mailbox number***). 0: Disable the corresponding interrupt 1: Enable the corresponding interrupt

42.5.8. Status register (CAN_STAT)

Address offset: 0x30

Reset value: 0x0000 0000

The bits 1 to 7 of this register will be cleared by configuration change of RFEN bit in CAN_CTL0 register.

This register has to be accessed by word(32-bit).

31	30	29	28	27	26	25	24	23	22	21	20	19	18	17	16
MS31	MS30	MS29	MS28	MS27	MS26	MS25	MS24	MS23	MS22	MS21	MS20	MS19	MS18	MS17	MS16
rc_w1	rc_w1	rc_w1	rc_w1	rc_w1	rc_w1	rc_w1	rc_w1	rc_w1	rc_w1	rc_w1	rc_w1	rc_w1	rc_w1	rc_w1	rc_w1

15	14	13	12	11	10	9	8	7	6	5	4	3	2	1	0
MS15	MS14	MS13	MS12	MS11	MS10	MS9	MS8	MS7_RFO	MS6_RFW	MS5_RFNE	MS4_RES	MS3_RES	MS2_RES	MS1_RES	MS0_RFC
rc_w1	rc_w1	rc_w1	rc_w1	rc_w1	rc_w1	rc_w1	rc_w1	rc_w1	rc_w1	rc_w1	rc_w1	rc_w1	rc_w1	rc_w1	rc_w1

Bits	Fields	Descriptions
31:8	MSx	Mailbox x state x is the mailbox number, refers to ***Mailbox number***. 0: No successful transmission or reception has occurred in the mailbox descriptor 1: A successful transmission or reception has occurred in the mailbox descriptor
7	MS7_RFO	Mailbox 7 state / Rx FIFO overflow 0: No successful transmission or reception has occurred in the mailbox descriptor 7 when Rx FIFO is disabled. / Rx FIFO is not overflow when Rx FIFO is enabled. 1: A successful transmission or reception has occurred in the mailbox descriptor 7

		when Rx FIFO is disabled. / Rx FIFO is overflow when Rx FIFO is enabled.
6	MS6_RFW	Mailbox 6 state / Rx FIFO warning 0: No successful transmission or reception has occurred in the mailbox descriptor 6 when Rx FIFO is disabled. / Rx FIFO has no warning when Rx FIFO is enabled. 1: A successful transmission or reception has occurred in the mailbox descriptor 6 when Rx FIFO is disabled. / Rx FIFO almost full warning when Rx FIFO is enabled.
5	MS5_RFNE	Mailbox 5 state / Rx FIFO not empty 0: No successful transmission or reception has occurred in the mailbox descriptor 5 when Rx FIFO is disabled. / Rx FIFO is empty when Rx FIFO is enabled. 1: A successful transmission or reception has occurred in the mailbox descriptor 5 when Rx FIFO is disabled. / Rx FIFO is not empty when Rx FIFO is enabled.
4	MS4_RES	Mailbox 4 state / Reserved Similar to MS1_RES description.
3	MS3_RES	Mailbox 3 state / Reserved Similar to MS1_RES description.
2	MS2_RES	Mailbox 2 state / Reserved Similar to MS1_RES description.
1	MS1_RES	Mailbox 1 state / Reserved 0: No successful transmission or reception has occurred in the mailbox descriptor 1 when Rx FIFO is disabled. / Reserved when Rx FIFO is enabled. 1: A successful transmission or reception has occurred in the mailbox descriptor 1 when Rx FIFO is disabled. / Reserved when Rx FIFO is enabled.
0	MS0_RFC	Mailbox 0 state / Clear Rx FIFO bit 0: No successful transmission or reception has occurred in the mailbox descriptor 0 when Rx FIFO is disabled. / No effect when Rx FIFO is enabled. 1: A successful transmission or reception has occurred in the mailbox descriptor 0 when Rx FIFO is disabled. / Clear Rx FIFO when Rx FIFO is enabled, only allowed to written in Inactive mode, refers to ***Clear FIFO***.

42.5.9. Control register 2 (CAN_CTL2)

Address offset: 0x34
Reset value: 0x00A0 0000

All bits except bit 31, 30 of this register should be configured in Inactive mode only, because they are blocked by hardware in other modes.

All bits of this register are not reset by software reset bit SWRST in CAN_CTL0 register.

This register has to be accessed by word(32-bit).

31	30	29	28	27	26	25	24	23	22	21	20	19	18	17	16
ERRFSIE	BORIE	Reserved		RFFN[3:0]				ASD[4:0]					RFO	RRFRMS	IDERTR_RMF
rw	rw				rw					rw			rw	rw	rw

15	14	13	12	11	10	9	8	7	6	5	4	3	2	1	0
ITSRC	PREEN	Reserved	ISO	EFDIS	Reserved										
rw	rw		rw	rw											

Bits	Fields	Descriptions
31	ERRFSIE	Error summary interrupt enable bit for data phase of FD frames with BRS bit set 0: Disable error summary interrupt for data phase of FD frames with BRS bit set 1: Enable error summary interrupt for data phase of FD frames with BRS bit set
30	BORIE	Bus off recovery interrupt enable 0: Disable Bus off recovery interrupt 1: Enable Bus off recovery interrupt
29:28	Reserved	Must be kept at reset value.
27:24	RFFN[3:0]	Rx FIFO filter number

Table 42-12. Rx FIFO filter element number

RFFN[3:0]	Rx FIFO filter element number	Rx FIFO occupied space	Available mailboxes
0000	8	Mailbox descriptor 0 - 7	Mailbox 8 - 31
0001	16	Mailbox descriptor 0 - 9	Mailbox 10 - 31
0002	24	Mailbox descriptor 0 - 11	Mailbox 12 - 31
0003	32	Mailbox descriptor 0 - 13	Mailbox 14 - 31
0004	40	Mailbox descriptor 0 - 15	Mailbox 16 - 31
0005	48	Mailbox descriptor 0 - 17	Mailbox 18 - 31
0006	56	Mailbox descriptor 0 – 19	Mailbox 20 - 31
0007	64	Mailbox descriptor 0 – 21	Mailbox 22 - 31
0008	72	Mailbox descriptor 0 – 23	Mailbox 24 - 31
0009	80	Mailbox descriptor 0 – 25	Mailbox 26 - 31
000A	88	Mailbox descriptor 0 – 27	Mailbox 28 - 31
000B	96	Mailbox descriptor 0 – 29	Mailbox 30 - 31
000C	104	Mailbox descriptor 0 – 31	none
others	104	Mailbox descriptor 0 - 31	none

This bit field must not be programmed with values that cause memory occupied by Rx FIFO to exceed the available memory size which is defined by MSZ[4:0] bits in CAN_CTL0 register, otherwise the exceeding ones will not be functional.

23:19	ASD[4:0]	Arbitration start delay This bit field defines how many CAN bits the Tx arbitration process start point can

		be delayed.
18	RFO	Receive filter order 0: Rx FIFO is filtered first 1: Mailboxes are filtered first
17	RRFRMS	Remote request frame is stored 0: Remote response frame is generated when a mailbox with CODE RANSWER is found with the same ID 1: Remote request frame is stored as a data frame without automatic remote response frame transmitted
16	IDERTR_RMF	IDE and RTR field filter type for Rx mailbox reception This bit defines the matching of IDE and RTR field in Rx mailbox descriptor with the received bit. 0: IDE field is always compared, and RTR is never compared. Regardless of the filter data configurations in related filter register. 1: Filtering of IDE and RTR fields are enabled, by filter data configurations in related filter register.
15	ITSRC	Internal counter source 0: CAN baudrate 1: External trigger CANx_EX_TIME_TICK from TRIGSEL output
14	PREEN	Protocol exception detection enable by CAN standard 0: Disable protocol exception detection 1: Enable protocol exception detection
13	Reserved	Must be kept at reset value.
12	ISO	ISO CAN FD 0: Non-ISO CAN FD protocol operation is applied 1: ISO CAN FD protocol operation is applied
11	EFDIS	Edge filtering disable 0: Enable edge filtering 1: Disable edge filtering
10:0	Reserved	Must be kept at reset value.

42.5.10. CRC for classical frame register (CAN_CRCC)

Address offset: 0x44

Reset value: 0x0000 0000

This register has to be accessed by word(32-bit).

31	30	29	28	27	26	25	24	23	22	21	20	19	18	17	16
Reserved											ANTM[4:0]				

													r		
15	14	13	12	11	10	9	8	7	6	5	4	3	2	1	0
Reserved	CRCTC[14:0]														
								r							

Bits	Fields	Descriptions
31:21	Reserved	Must be kept at reset value.
20:16	ANTM[4:0]	Associated number of mailbox for transmitting the CRCTC[14:0] value This bit field contains the number of the mailbox which transmits the CRCTC[14:0] value.
15	Reserved	Must be kept at reset value.
14:0	CRCTC[14:0]	Transmitted CRC value for classical frames This bit field contains the CRC value of the last successfully transmitted message in classical format.

42.5.11. Receive FIFO public filter register (CAN_RFIFOPUBF)

Address offset: 0x48
Reset value: 0xXXXX XXXX

This register is located in RAM.

All bits of this register should be configured in Inactive mode only, because they are blocked by hardware in other modes.

This register has to be accessed by word(32-bit).

31	30	29	28	27	26	25	24	23	22	21	20	19	18	17	16
FFD31	FFD30	FFD29	FFD27	FFD27	FFD26	FFD25	FFD24	FFD23	FFD22	FFD21	FFD20	FFD19	FFD18	FFD17	FFD16
rw	rw	rw	rw	rw	rw	rw	rw	rw	rw	rw	rw	rw	rw	rw	rw
15	14	13	12	11	10	9	8	7	6	5	4	3	2	1	0
FFD15	FFD14	FFD13	FFD12	FFD11	FFD10	FFD9	FFD8	FFD7	FFD6	FFD5	FFD4	FFD3	FFD2	FFD1	FFD0
rw	rw	rw	rw	rw	rw	rw	rw	rw	rw	rw	rw	rw	rw	rw	rw

Bits	Fields	Descriptions
31:0	FFDx	Rx FIFO filter data Each bit is used for filtering the corresponding ID filter table element bit, except the reserved bit in ID filter table element. 0: The bit is "don't care" 1: The bit is checked

42.5.12. Receive FIFO identifier filter matching number register (CAN_RFIFOIFMN)

Address offset: 0x4C
Reset value: 0xXXXX XXXX

This register has to be accessed by word(32-bit).

31	30	29	28	27	26	25	24	23	22	21	20	19	18	17	16
Reserved															

15	14	13	12	11	10	9	8	7	6	5	4	3	2	1	0
Reserved							IDFMN[8:0]								
											r				

Bits	Fields	Descriptions
31:9	Reserved	Must be kept at reset value.
8:0	IDFMN[8:0]	Identifier filter matching number This field is valid only when MS5_RFNE bit in CAN_STAT register is 1. This bit field indicates which ID filter table element matches the received message that is in the output of the Rx FIFO. If more than one element is matched, the ID filter table element with the lowest number is stored.

42.5.13. Bit timing register (CAN_BT)

Address offset: 0x50
Reset value: 0x0100 0000

All bits of this register should be configured in Inactive mode only, because they are blocked by hardware in other modes.

This register is not affected by software reset bit SWRST in CAN_CTL0 register.

This register has to be accessed by word(32-bit).

31	30	29	28	27	26	25	24	23	22	21	20	19	18	17	16
Reserved	BAUDPSC[9:0]										SJW[4:0]				
	rw										rw				

15	14	13	12	11	10	9	8	7	6	5	4	3	2	1	0
PTS[5:0]						PBS1[4:0]					PBS2[4:0]				
rw						rwr					rw				

Bits	Fields	Descriptions
31	Reserved	Must be kept at reset value.
30:21	BAUDPSC[9:0]	Baud rate prescaler

		The CAN baud rate prescaler.
20:16	SJW[4:0]	Resynchronization jump width Resynchronization jump width time quantum = SJW[4:0] + 1
15:10	PTS[5:0]	Propagation time segment Propagation time segment time quantum = PTS[5:0] + 1
9:5	PBS1[4:0]	Phase buffer segment 1 Phase buffer segment 1 time quantum = PBS1[4:0] + 1
4:0	PBS2[4:0]	Phase buffer segment 2 Phase buffer segment 2 time quantum = PBS2[4:0] + 1

42.5.14. Receive FIFO/mailbox private filter x register (CAN_RFIFOMPFx)(x=0..31)

Address offset: 0x880 + 4 × x
Reset value: 0xXXXX XXXX

These register is located in RAM.

All bits of these registers should be configured in Inactive mode only, because they are blocked by hardware in other modes.

These registers are not affected by software reset bit SWRST in CAN_CTL0 register.

These registers have to be accessed by word(32-bit).

31	30	29	28	27	26	25	24	23	22	21	20	19	18	17	16
FMFD31	FMFD30	FMFD29	FMFD27	FMFD27	FMFD26	FMFD25	FMFD24	FMFD23	FMFD22	FMFD21	FMFD20	FMFD19	FMFD18	FMFD17	FMFD16
rw	rw	rw	rw	rw	rw	rw	rw	rw	rw	rw	rw	rw	rw	rw	rw
15	14	13	12	11	10	9	8	7	6	5	4	3	2	1	0
FMFD15	FMFD14	FMFD13	FMFD12	FMFD11	FMFD10	FMFD9	FMFD8	FMFD7	FMFD6	FMFD5	FMFD4	FMFD3	FMFD2	FMFD1	FMFD0
rw	rw	rw	rw	rw	rw	rw	rw	rw	rw	rw	rw	rw	rw	rw	rw

Bits	Fields	Descriptions
31:0	FMFDx	FIFO/mailbox filter data If used as mailbox filters, refer to the MFDx bits in CAN_RMPUBF register. If used as Rx FIFO filters, refer to the FFDx bits in CAN_RFIFOPUBF register. 0: The bit is "don't care" 1: The bit is checked

42.5.15. Pretended Networking mode control register 0 (CAN_PN_CTL0)

Address offset: 0xB00
Reset value: 0x0000 0100

All bits except bit 17, 16 of this register should be configured in Inactive mode only, because they are blocked by hardware in other modes.

This register has to be accessed by word(32-bit).

31	30	29	28	27	26	25	24	23	22	21	20	19	18	17	16
Reserved														WTOIE	WMIE
														rw	rw

15	14	13	12	11	10	9	8	7	6	5	4	3	2	1	0
NMM[7:0]								Reserved		DATAFT[1:0]		IDFT[1:0]		FFT[1:0]	
rw										rw		rw		rw	

Bits	Fields	Descriptions
31:18	Reserved	Must be kept at reset value.
17	WTOIE	Wakeup timeout interrupt enable 0: Disable wakeup timeout interrupt 1: Enable wakeup timeout interrupt
16	WMIE	Wakeup match interrupt enable 0: Disable wakeup match interrupt 1: Enable wakeup match interrupt
15:8	NMM[7:0]	Number of messages matching times An event counter is used in the wakeup message filter, in which a transistion on the output of event after N input matching events. 00000001: N = 1 00000010: N = 2 …… 11111111: N = 255
7:6	Reserved	Must be kept at reset value.
5:4	DATAFT[1:0]	DATA field filtering type in Pretended Networking mode 00: Only messages with DATA field equal to the expected data field through data filter are matched 01: Messages with DATA field greater than or equal to the expected data low threshold are matched 10: Messages with DATA field smaller than or equal to the expected data high threshold are matched 11: Messages with DATA field greater than or equal to the expected data low threshold, and smaller than or equal to the expected data high threshold are matched
3:2	IDFT[1:0]	ID field filtering type in Pretended Networking mode 00: Only messages with ID field equal to the expected identifier through identifier filter are matched 01: Messages with ID field greater than or equal to the expected identifier low threshold are matched 10: Messages with ID field smaller than or equal to the expected identifier high

		threshold are matched 11: Messages with ID field greater than or equal to the expected identifier low threshold, and smaller than or equal to the expected identifier high threshold are matched
1:0	FFT[1:0]	Frame filtering type in Pretended Networking mode 00: All fields except DATA field, DLC field are filtered 01: All fields are filtered 10: All fields except DATA field, DLC field are filtered with NMM[7:0] matching times 11: All fields are filtered with NMM[7:0] matching times

42.5.16. Pretended Networking mode timeout register (CAN_PN_TO)

Address offset: 0xB04

Reset value: 0x0000 0000

All bits of this register should be configured in Inactive mode only, because they are blocked by hardware in other modes.

This register has to be accessed by word(32-bit).

31	30	29	28	27	26	25	24	23	22	21	20	19	18	17	16
Reserved															

15	14	13	12	11	10	9	8	7	6	5	4	3	2	1	0
WTO[15:0]															
rw															

Bits	Fields	Descriptions
31:16	Reserved	Must be kept at reset value.
15:0	WTO[15:0]	Wakeup timeout The timeout is counted by step of 64 times the CAN Bit Time. Wakeup timeout is default disabled.

42.5.17. Pretended Networking mode status register (CAN_PN_STAT)

Address offset: 0xB08

Reset value: 0x0000 0080

This register has to be accessed by word(32-bit).

31	30	29	28	27	26	25	24	23	22	21	20	19	18	17	16
Reserved														WTOS	WMS
														rc_w1	rc_w1

15	14	13	12	11	10	9	8	7	6	5	4	3	2	1	0
MMCNT[7:0]								MMCNTS	Reserved						

r r

Bits	Fields	Descriptions
31:18	Reserved	Must be kept at reset value.
17	WTOS	Wakeup timeout flag status 0: No wakeup timeout event occured 1: Wakeup timeout event occured
16	WMS	Wakeup match flag status 0: No wakeup match event occured 1: Wakeup match event occured
15:8	MMCNT[7:0]	Matching message counter in Pretended Networking mode This bit field indicates the matching message number during Pretended Networking mode. These bits are cleared when node enters Pretended Networking mode, they are not affected by software reset.
7	MMCNTS	Matching message counter state This bit is set to 1 to show the value of MMCNT[7:0] is valid. 0: Matching message counter MMCNT[7:0] is updating 1: Matching message counter MMCNT[7:0] is valid
6:0	Reserved	Must be kept at reset value.

42.5.18. Pretended Networking mode expected identifier 0 register (CAN_PN_EID0)

Address offset: 0xB0C
Reset value: 0x0000 0000

All bits of this register should be configured in Inactive mode only, because they are blocked by hardware in other modes.

This register has to be accessed by word(32-bit).

31	30	29	28	27	26	25	24	23	22	21	20	19	18	17	16
Reserved	EIDE	ERTR	EID_ELT[28:16]												
	rw	rw							rw						

15	14	13	12	11	10	9	8	7	6	5	4	3	2	1	0
EID_ELT[15:0]															
rw															

Bits	Fields	Descriptions
31	Reserved	Must be kept at reset value.
30	EIDE	Expected IDE in Pretended Networking mode

		0: Standard frame format 1: Extended frame format
29	ERTR	Expected RTR in Pretended Networking mode 0: Data frame 1: Remote frame
28:0	EIDF_ELT[28:0]	Expected ID field / expected ID low threshold in Pretended Networking mode This bit field is used as expected ID field when IDFT[1:0] bit field in CAN_PN_CTL0 register is 0 / 1 / 2, or is used as expected ID low threshold when IDFT[1:0] bit field is 3. For extended frame format, all 29 bits are used. For standard frame format, bits 18 to 28 are used.

42.5.19. Pretended Networking mode expected DLC register (CAN_PN_EDLC)

Address offset: 0xB10
Reset value: 0x0000 0008

All bits of this register should be configured in Inactive mode only, because they are blocked by hardware in other modes.

This register has to be accessed by word(32-bit).

31	30	29	28	27	26	25	24	23	22	21	20	19	18	17	16
Reserved												DLCELT[3:0]			
												rw			

15	14	13	12	11	10	9	8	7	6	5	4	3	2	1	0
Reserved												DLCEHT[3:0]			
												rw			

Bits	Fields	Descriptions
31:20	Reserved	Must be kept at reset value.
19:16	DLCELT[3:0]	DLC expected low threshold in Pretended Networking mode
15:4	Reserved	Must be kept at reset value.
3:0	DLCEHT[3:0]	DLC expected high threshold in Pretended Networking mode

42.5.20. Pretended Networking mode expected data low 0 register (CAN_PN_EDL0)

Address offset: 0xB14
Reset value: 0x0000 0000

All bits of this register should be configured in Inactive mode only, because they are blocked

by hardware in other modes.

This register has to be accessed by word(32-bit).

31	30	29	28	27	26	25	24	23	22	21	20	19	18	17	16
DB0ELT[7:0]								DB1ELT[7:0]							
rw								rw							

15	14	13	12	11	10	9	8	7	6	5	4	3	2	1	0
DB2ELT[7:0]								DB3ELT[7:0]							
rw								rw							

Bits	Fields	Descriptions
31:24	DB0ELT[7:0]	Data byte 0 expected low threshold in Pretended Networking mode Refer to DB3ELT[7:0] descriptions.
23:16	DB1ELT[7:0]	Data byte 1 expected low threshold in Pretended Networking mode Refer to DB3ELT[7:0] descriptions.
15:8	DB2ELT[7:0]	Data byte 2 expected low threshold in Pretended Networking mode Refer to DB3ELT[7:0] descriptions.
7:0	DB3ELT[7:0]	Data byte 3 expected low threshold in Pretended Networking mode This bit field is used as expected DATA field when DATAFT[1:0] bit field in CAN_PN_CTL0 register is 0 / 1 / 2, or is used as expected DATA low threshold when DATAFT[1:0] bit field is 3.

42.5.21. Pretended Networking mode expected data low 1 register (CAN_PN_EDL1)

Address offset: 0xB18
Reset value: 0x0000 0000

All bits of this register should be configured in Inactive mode only, because they are blocked by hardware in other modes.

This register has to be accessed by word(32-bit).

31	30	29	28	27	26	25	24	23	22	21	20	19	18	17	16
DB4ELT[7:0]								DB5ELT[7:0]							
rw								rw							

15	14	13	12	11	10	9	8	7	6	5	4	3	2	1	0
DB6ELT[7:0]								DB7ELT[7:0]							
rw								rw							

Bits	Fields	Descriptions
31:24	DB4ELT[7:0]	Data byte 4 expected low threshold in Pretended Networking mode Refer to DB3ELT[7:0] descriptions.

23:16	DB5ELT[7:0]	Data byte 5 expected low threshold in Pretended Networking mode Refer to DB3ELT[7:0] descriptions.
15:8	DB6ELT[7:0]	Data byte 6 expected low threshold in Pretended Networking mode Refer to DB3ELT[7:0] descriptions.
7:0	DB7ELT[7:0]	Data byte 7 expected low threshold in Pretended Networking mode Refer to DB3ELT[7:0] descriptions.

42.5.22. Pretended Networking mode identifier filter / expected identifier 1 register (CAN_PN_IFEID1)

Address offset: 0x B1C
Reset value: 0x0000 0000

All bits of this register should be configured in Inactive mode only, because they are blocked by hardware in other modes.

This register has to be accessed by word(32-bit).

31	30	29	28	27	26	25	24	23	22	21	20	19	18	17	16
Reserved	IDEFD	RTRFD	IDFD_EHT[28:16]												
	rw	rw							rw						

15	14	13	12	11	10	9	8	7	6	5	4	3	2	1	0
IDFD_EHT[15:0]															
rw															

Bits	Fields	Descriptions
31	Reserved	Must be kept at reset value.
30	IDEFD	IDE filter data in Pretended Networking mode 0: The bit is "don't care" 1: The bit is checked
29	RTRFD	RTR filter data in Pretended Networking mode 0: The bit is "don't care" 1: The bit is checked
28:0	IDFD_EHT[28:0]	ID filter data / ID expected high threshold in Pretended Networking mode **ID filter data** (when IDFT[1:0] bit field in CAN_PN_CTL0 register is 0): 0: The bit is "don't care" 1: The bit is checked **ID expected high threshold** (when IDFT[1:0] bit field is 3). **Bits reserved** (when IDFT[1:0] bit field is 1 or 2). For extended frame format, all 29 bits are used. For standard frame format, bits 18 to 28 are used.

42.5.23. Pretended Networking mode data 0 filter / expected data high 0 register (CAN_PN_DF0EDH0)

Address offset: 0xB20
Reset value: 0x0000 0000

All bits of this register should be configured in Inactive mode only, because they are blocked by hardware in other modes.

This register has to be accessed by word(32-bit).

31	30	29	28	27	26	25	24	23	22	21	20	19	18	17	16
DB0FD_EHT[7:0]								DB1FD_EHT[7:0]							
rw								rw							

15	14	13	12	11	10	9	8	7	6	5	4	3	2	1	0
DB2FD_EHT[7:0]								DB3FD_EHT[7:0]							
rw								rw							

Bits	Fields	Descriptions
31:24	DB0FD_EHT[7:0]	Data byte 0 filter data / Data byte 0 expected high threshold in Pretended Networking mode Refer to DB3FD_EHT[7:0] descriptions.
23:16	DB1FD_EHT[7:0]	Data byte 1 filter data / Data byte 1 expected high threshold in Pretended Networking mode Refer to DB3FD_EHT[7:0] descriptions.
15:8	DB2FD_EHT[7:0]	Data byte 2 filter data / Data byte 2 expected high threshold in Pretended Networking mode Refer to DB3FD_EHT[7:0] descriptions.
7:0	DB3FD_EHT[7:0]	Data byte 3 filter data / Data byte 2 expected high threshold in Pretended Networking mode **Data byte 3 filter data** (when DATAFT[1:0] bit field in CAN_PN_CTL0 register is 0): 0: The bit is "don't care" 1: The bit is checked **Data byte 3 expected high threshold** (when DATAFT[1:0] bit field is 3). **Bits reserved** (when DATAFT[1:0] bit field is 1 or 2).

42.5.24. Pretended Networking mode data 1 filter / expected data high 1 register (CAN_PN_DF1EDH1)

Address offset: 0xB24
Reset value: 0x0000 0000

All bits of this register should be configured in Inactive mode only, because they are blocked by hardware in other modes.

This register has to be accessed by word(32-bit).

31	30	29	28	27	26	25	24	23	22	21	20	19	18	17	16
DB4FD_HTF[7:0]								DB5FD_HTF[7:0]							
rw								rw							

15	14	13	12	11	10	9	8	7	6	5	4	3	2	1	0
DB6FD_HTF[7:0]								DB7FD_HTF[7:0]							
rw								rw							

Bits	Fields	Descriptions
31:24	DB4FD_HTF[7:0]	Data byte 4 filter data / Data byte 4 expected high threshold in Pretended Networking mode Refer to DB3FD_EHT[7:0] descriptions.
23:16	DB5FD_HTF[7:0]	Data byte 5 filter data / Data byte 5 expected high threshold in Pretended Networking mode Refer to DB3FD_EHT[7:0] descriptions.
15:8	DB6FD_HTF[7:0]	Data byte 6 filter data / Data byte 6 expected high threshold in Pretended Networking mode Refer to DB3FD_EHT[7:0] descriptions.
7:0	DB7FD_HTF[7:0]	Data byte 7 filter data / Data byte 7 expected high threshold in Pretended Networking mode Refer to DB3FD_EHT[7:0] descriptions.

42.5.25. Pretended Networking mode received wakeup mailbox x control status information register (CAN_PN_RWMxCS)(x=0..3)

Address offset: 0xB40 + 16 * x

Reset value: 0x0000 0000

This register has to be accessed by word(32-bit).

31	30	29	28	27	26	25	24	23	22	21	20	19	18	17	16
Reserved									RSRR	RIDE	RRTR	RDLC[3:0]			
									r	r	r	r			

15	14	13	12	11	10	9	8	7	6	5	4	3	2	1	0
Reserved															

Bits	Fields	Descriptions
31:23	Reserved	Must be kept at reset value.

22	RSRR	Received SRR bit
21	RIDE	Received IDE bit 0: Frame format is standard 1: Frame format is extended
20	RRTR	Received RTR bit 0: Frame is data frame 1: Frame is remote frame
19:16	RDLC[3:0]	Received DLC bits The bit field indicates the valid data byte length.
15:0	Reserved	Must be kept at reset value.

42.5.26. Pretended Networking mode received wakeup mailbox x identifier register (CAN_PN_RWMxI)(x=0..3)

Address offset: 0xB44 + 16 * x

Reset value: 0x0000 0000

This register has to be accessed by word(32-bit).

31	30	29	28	27	26	25	24	23	22	21	20	19	18	17	16
Reserved			RID[28:16]												
			r												

15	14	13	12	11	10	9	8	7	6	5	4	3	2	1	0
RID[15:0]															
r															

Bits	Fields	Descriptions
31:29	Reserved	Must be kept at reset value.
28:0	RID[28:16]	Received ID bits For extended frame format, all 29 bits are used for ID storage. For standard frame format, bits 18 to 28 are used for ID storage.

42.5.27. Pretended Networking mode received wakeup mailbox x data 0 register (CAN_PN_RWMxD0)(x=0..3)

Address offset: 0xB48 + 16 * x

Reset value: 0x0000 0000

This register has to be accessed by word(32-bit).

31	30	29	28	27	26	25	24	23	22	21	20	19	18	17	16
RDB0[7:0]								RDB1[7:0]							

15	14	13	12	11	10	9	8	7	6	5	4	3	2	1	0
r								r							
RDB2[7:0]								RDB3[7:0]							
r								r							

Bits	Fields	Descriptions
31:24	RDB0[7:0]	Received data byte 0
23:16	RDB1[7:0]	Received data byte 1
15:8	RDB2[7:0]	Received data byte 2
7:0	RDB3[7:0]	Received data byte 3

42.5.28. Pretended Networking mode received wakeup mailbox x data 1 register (CAN_PN_RWMxD1)(x=0..3)

Address offset: 0xB4C + 16 * x
Reset value: 0x0000 0000

This register has to be accessed by word(32-bit).

31	30	29	28	27	26	25	24	23	22	21	20	19	18	17	16
RDB4[7:0]								RDB5[7:0]							
r								r							
15	14	13	12	11	10	9	8	7	6	5	4	3	2	1	0
RDB6[7:0]								RDB7[7:0]							
r								r							

Bits	Fields	Descriptions
31:24	RDB4[7:0]	Received data byte 4
23:16	RDB5[7:0]	Received data byte 5
15:8	RDB6[7:0]	Received data byte 6
7:0	RDB7[7:0]	Received data byte 7

42.5.29. FD control register (CAN_FDCTL)

Address offset: 0xC00
Reset value: 0x8000 0101

Bits 17:16, 15, 12:8 of this register should be configured in Inactive mode only, because they are blocked by hardware in other modes.

This register is not affected by software reset bit SWRST in CAN_CTL0 register.

This register has to be accessed by word(32-bit).

31	30	29	28	27	26	25	24	23	22	21	20	19	18	17	16
BRSEN	Reserved													MDSZ[1:0]	
rw														rw	

15	14	13	12	11	10	9	8	7	6	5	4	3	2	1	0
TDCEN	TDCS	Reserved	TDCO[4:0]					Reserved		TDCV[5:0]					
rw	rc_w1				rw							r			

Bits	Fields	Descriptions
31	BRSEN	Bit rate of data switch enable 0: Bit rate not switch 1: The bit rate shall be switched from the nominal bit rate to the preconfigured data bit rate during the data phase when BRS bit in Tx mailbox is recessive ‘1’
30:18	Reserved	Must be kept at reset value.
17:16	MDSZ[1:0]	Mailbox data size 00: 8 bytes per mailbox 01: 16 bytes per mailbox 10: 32 bytes per mailbox 11: 64 bytes per mailbox
15	TDCEN	Transmitter delay compensation enable **Note:** Transmitter delay compensation must be disabled when loopback and silent mode is enabled. 0: Transmitter delay compensation is disabled 1: Transmitter delay compensation is enabled
14	TDCS	Transmitter delay compensation status When this bit is set, the transmitter delay is out of compensation range, it is unable to compensate the transmitter delay for bit check. 0: Transmitter delay is in compensation range 1: Transmitter delay is out of compensation range
13	Reserved	Must be kept at reset value.
12:8	TDCO[4:0]	Transmitter delay compensation offset These bits are set to the transmitter delay compensation offset value which defines the distance between the measured delay from CANTX to CANRX and the second sample point for CAN FD frames with BRS bit set.
7:6	Reserved	Must be kept at reset value.
5:0	TDCV[5:0]	Transmitter delay compensation value These bits are set by hardware to display the summary of the measured transmitter delay value and the transmitter delay compensation offset.

42.5.30. FD bit timing register (CAN_FDBT)

Address offset: 0xC04

Reset value: 0x0000 0000

All bits of this register should be configured in Inactive mode only, because they are blocked by hardware in other modes.

This register is not affected by software reset bit SWRST in CAN_CTL0 register.

This register has to be accessed by word(32-bit).

31	30	29	28	27	26	25	24	23	22	21	20	19	18	17	16
Reserved		DBAUDPSC[9:0]										Reserved	DSJW[2:0]		
		rw											rw		

15	14	13	12	11	10	9	8	7	6	5	4	3	2	1	0
Reserved	DPTS[4:0]					Reserved		DPBS1[2:0]			Reserved		DPBS2[2:0]		
	rw							rw					rw		

Bits	Fields	Descriptions
31:30	Reserved	Must be kept at reset value.
29:20	DBAUDPSC[9:0]	Baud rate prescaler for data bit time The CAN data bit time baud rate prescaler.
19	Reserved	Must be kept at reset value.
18:16	DSJW[2:0]	Resynchronization jump width for data bit time Resynchronization jump width time quantum = DSJW[2:0] + 1
15	Reserved	Must be kept at reset value.
14:10	DPTS[4:0]	Propagation time segment for data bit time Propagation time segment time quantum = DPTS[4:0]
9:8	Reserved	Must be kept at reset value.
7:5	DPBS1[2:0]	Phase buffer segment 1 for data bit time Phase buffer segment 1 time quantum = DPBS1[2:0] + 1
4:3	Reserved	Must be kept at reset value.
2:0	DPBS2[2:0]	Phase buffer segment 2 for data bit time Phase buffer segment 2 time quantum = DPBS2[2:0] + 1

42.5.31. CRC for classical and FD frame register (CAN_CRCCFD)

Address offset: 0xC08

Reset value: 0x0000 0000

This register has to be accessed by word(32-bit).

31	30	29	28	27	26	25	24	23	22	21	20	19	18	17	16
Reserved			ANTM[4:0]					Reserved			CRCTCI[20:16]				
					r								r		

15	14	13	12	11	10	9	8	7	6	5	4	3	2	1	0
CRCTCI[15:0]															
							r								

Bits	Fields	Descriptions
31:29	Reserved	Must be kept at reset value.
28:24	ANTM[4:0]	Associated number of mailbox for transmitting the CRCTCI[20:0] value This bit field contains the number of the mailbox which transmits the CRCTCI[20:0] value for both classical and FD frames.
23:21	Reserved	Must be kept at reset value.
20:0	CRCTCI[20:0]	Transmitted CRC value for classical and ISO / non-ISO FD frames For CRC_15, bits 0 to 14 are used, the other bits are zeros, and the value is the same as the value of CRCTC[14:0] in CAN_CRCC register. For CRC_17, bits 0 to 16 are used, the other bits are zeros. For CRC_21, all 21 bits are used.

43. Ethernet (ENET)

43.1. Overview

This chapter describes the Ethernet peripheral module. There are two media access controller (MAC) designed in Ethernet module to support 10 / 100Mbps interface speed. For more efficient datas transfer between Ethernet and memory, a DMA controller is designed in this module. The support interface protocol for Ethernet is media independent interface (MII) and reduced media independent interface (RMII). This module is mainly compliant with the following two standards: IEEE 802.3-2002 and IEEE 1588-2008.

43.2. Characteristics

MAC feature

- 10Mbit / s and 100Mbit / s data transfer rates support.
- MII and RMII interface support.
- Loopback mode support for diagnosis.
- CSMA / CD Protocol for Half-duplex back-pressure operation support.
- IEEE 802.3x flow control protocol support. Automatic delay a pause time which is decoded from a receive pause frame after current transmitting frame complete. MAC automatically transmits pause frame or back pressure feature depending on fill level of RxFIFO in Full-duplex mode or in Half-duplex mode.
- Automatic transmission of pause frame on assertion and de-assertion of flow control input frame. Zero-quanta pause time length frame for Full-duplex operation. IEEE 802.3x flow control for Full-duplex operation support. Back pressure feature to the MAC core based on RxFIFO fill level (Cut-Through mode) support. IEEE 802.3x flow control for Half-duplex operation support.
- Software configurable for automatic PAD / CRC generation in transmits operation.
- Software configurable for automatic PAD / CRC stripping in receives operation.
- Software configurable for frame length.
- Software configurable for inter-frame gap.
- Support different receiving filter mode.
- IEEE 802.1Q VLAN tag detection function support for reception frames.
- Support mandatory network statistics standard (RFC2819 / RFC2665).
- Two types of wakeup frame detection: LAN remote wakeup frame and AMD Magic Packet™ frames.
- Support checking checksum (IPv4 header, TCP, UDP or ICMP encapsulated in IPv4 or IPv6 data format).
- Support Ethernet frame time stamping for both transmit and receive operation, which describes in IEEE 1588-2008, and 64 bits time stamps are given in each frame's status.
- Two independent FIFO for transmitting and receiving.

- Support special condition frame discards handling, e.g. late collision, excessive collisions, excessive deferral or underrun.
- In the process of frame transmission, support computation and insertion of hardware checksum under store-and-forward mode.

DMA Feature

- Two types of descriptor addressing: Ring and Chain.
- Descriptor of transmit and receive both can transfer data up to 8192 bytes.
- Software configurable normal and abnormal interrupt for many status conditions.
- Support round-robin or fixed priority to arbitrate the request of transmit and receive controller.

PTP Feature

- Support IEEE 1588 time synchronization function.
- Support two correction methods: Coarse or Fine.
- Support output pulse in seconds.
- Preset expected time reaching trigger and interrupt

43.2.1. Block diagram

The Ethernet module is composed of two MAC modules, two MII/RMII modules and two DMA modules by descriptor control. When using Ethernet, the user should ensure that the configured AHB clock frequency is no less than 25MHz.

Figure 43-1. ENET module block diagram

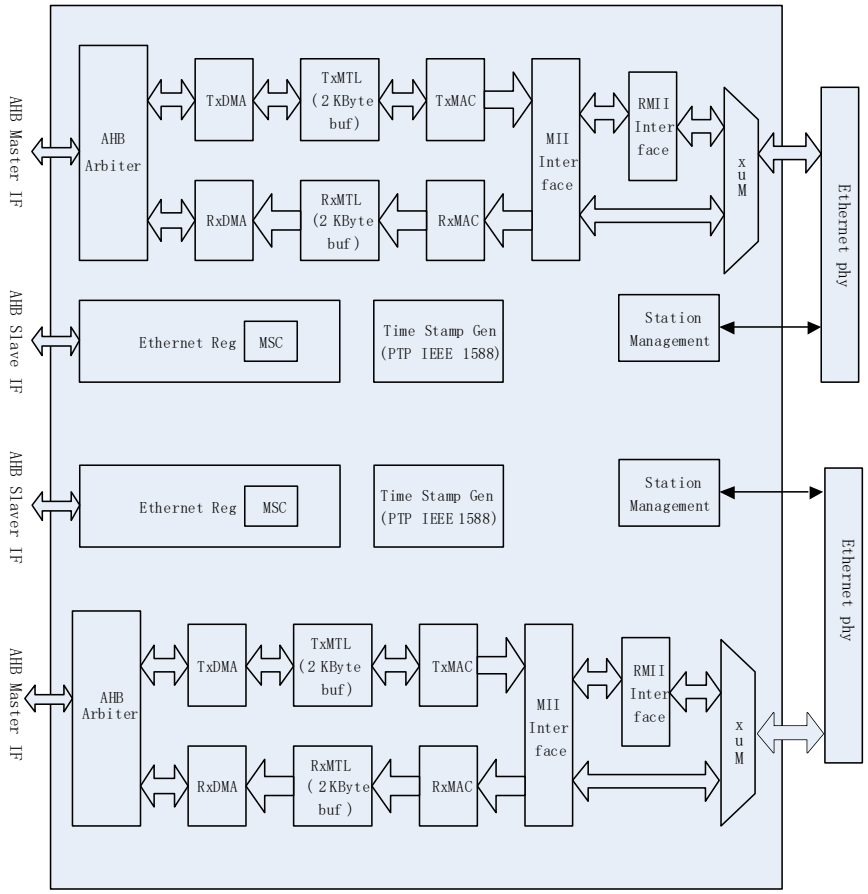

The MAC module is connected to the external PHY by MII or RMII through one selection bit (refer to SYSCFG_PMCFG register). The SMI (Station Management Interface) is used to configure and manage external PHY.

Transmitting data module includes:

- TxDMA controller, used to read descriptors and data from memory and writes status to memory.
- TxMTL, used to control, management and store the transmit data. TxFIFO is implemented in this module and used to cache transmitting data from memory for MAC transmission.
- The MAC transmission relative control registers, used to control frame transmit.

Receiving data module includes:

- RxDMA controller, used to read descriptors from memory and writes received frame data and status to memory.
- RxMTL, used to control, management and store reception data. RxFIFO is implemented in this module and used to temporarily store received frame data before forwarding them into the system physical memory.
- The MAC reception relative control registers, used to control frame receive and marked the receiving state. Also a receiving filter with a variety of filtering mode is implemented in MAC, used to filter out specific Ethernet frame.

43.2.2. MAC 802.3 Ethernet packet description

Data communication of MAC can use two frame formats:

- Basic frame format.
- Tagged frame format.

Figure 43-2. MAC / Tagged MAC frame **format**

describes the structure of the frame (Basic and Tagged) that includes the following fields:

Figure 43-2. MAC / Tagged MAC frame format

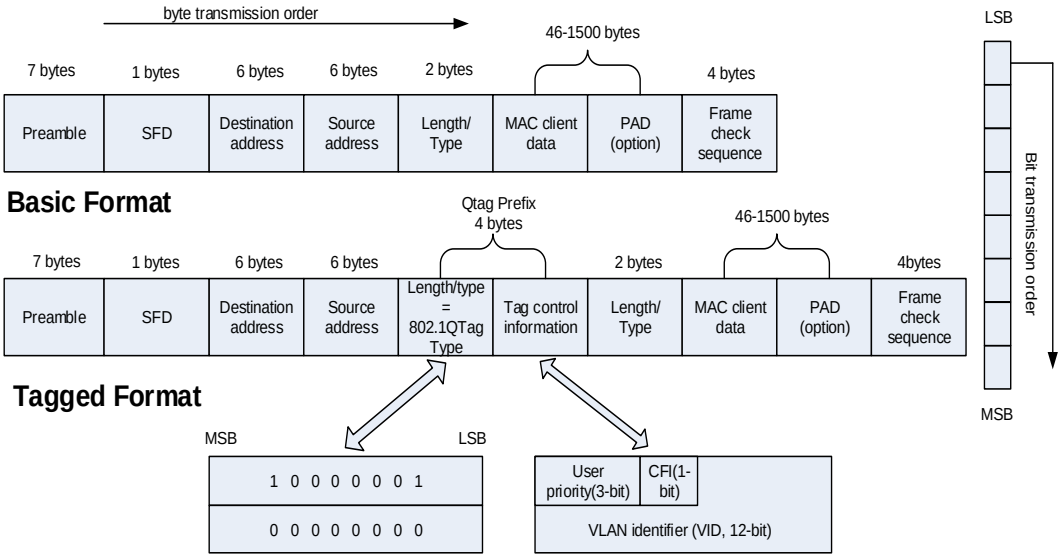

Note: The Ethernet controller transmits each byte at LSB first except FCS field.

CRC calculation data comes from all bytes in the frame except the Preamble and SFD domain. The Ethernet frame's 32-bit CRC calculation value generating polynomial is fixed 0x04C11DB7 and this polynomial is used in all 32-bit CRC calculation places in Ethernet module, as follows:

$$G(x) = x^{32} + x^{26} + x^{23} + x^{22} + x^{16} + x^{12} + x^{11} + x^{10} + x^{8} + x^{7} + x^{5} + x^{4} + x^{2} + x + 1$$

43.2.3. Ethernet signal description

Table 43-1. Ethernet signals (MII) and ***Table 43-2. Ethernet signals (RMII)*** shows the MAC module that pin is used default and remapping functions and specific configuration in MII / RMII mode.

Table 43-1. Ethernet signals (MII)

Signals	Pin1	Pin2	Pin3	Pin mode
ETH0_MDC	PC1			AF output push-pull(AF11)
ETH0_MII_TXD2	PC2			AF output push-pull(AF11)
ETH0_MII_TX_CLK	PC3			AF output push-pull(AF11)

Signals	Pin1	Pin2	Pin3	Pin mode
ETH0_MII_CRS	PA0	PH2		AF output push-pull(AF11)
ETH0_MII_RX_CLK	PA1			AF output push-pull(AF11)
ETH0_MDIO	PA2			AF output push-pull(AF11)
ETH0_MII_COL	PA3	PH3		AF output push-pull(AF11)
ETH0_MII_RX_DV	PA7			AF output push-pull(AF11)
ETH0_MII_RXD0	PC4			AF output push-pull(AF11)
ETH0_MII_RXD1	PC5			AF output push-pull(AF11)
ETH0_MII_RXD2	PB0	PH6		AF output push-pull(AF11)
ETH0_MII_RXD3	PB1	PH7		AF output push-pull(AF11)
ETH0_PPS_OUT	PB5	PG8		AF output push-pull(AF11)
ETH0_MII_TXD3	PB8	PE2		AF output push-pull(AF11)
ETH0_MII_RX_ER	PB10			AF output push-pull(AF11)
ETH0_MII_TX_EN	PB11	PG11		AF output push-pull(AF11)
ETH0_MII_TXD0	PB12	PG13		AF output push-pull(AF11)
ETH0_MII_TXD1	PB13	PG12	PG14	AF output push-pull(AF11)
ETH1_MDC	PG6			AF output push-pull(AF6)
ETH1_MII_TXD2	PG12			AF output push-pull(AF6)
ETH1_MII_TX_CLK	PG9			AF output push-pull(AF6)
ETH1_MII_CRS	PH15			AF output push-pull(AF6)
ETH1_MII_RX_CLK	PH12			AF output push-pull(AF6)
ETH1_MDIO	PH14			AF output push-pull(AF6)
ETH1_MII_COL	PH13			AF output push-pull(AF6)
ETH1_MII_RX_DV	PH11			AF output push-pull(AF6)
ETH1_MII_RXD0	PH8			AF output push-pull(AF6)
ETH1_MII_RXD1	PH9			AF output push-pull(AF6)
ETH1_MII_RXD2	PH6			AF output push-pull(AF6)
ETH1_MII_RXD3	PH7			AF output push-pull(AF6)
ETH1_PPS_OUT	PG8			AF output push-pull(AF6)
ETH1_MII_TXD3	PG15			AF output push-pull(AF6)
ETH1_MII_RX_ER	PH10			AF output push-pull(AF6)
ETH1_MII_TX_EN	PG11			AF output push-pull(AF6)
ETH1_MII_TXD0	PG13			AF output push-pull(AF6)
ETH1_MII_TXD1	PG14			AF output push-pull(AF6)

Table 43-2. Ethernet signals (RMII)

Signals	Pin1	Pin2	Pin3	Pin mode
ETH0_MDC	PC1			AF output push-pull(AF11)
ETH0_RMII_REF_CLK	PA1			AF output push-pull(AF11)
ETH0_MDIO	PA2			AF output push-pull(AF11)
ETH0_RMII_CRS_DV	PA7			AF output push-pull(AF11)
ETH0_RMII_RXD0	PC4			AF output push-pull(AF11)
ETH0_RMII_RXD1	PC5			AF output push-pull(AF11)

Signals	Pin1	Pin2	Pin3	Pin mode
ETH0_PPS_OUT	PB5			AF output push-pull(AF11)
ETH0_RMII_TX_EN	PB11	PG11		AF output push-pull(AF11)
ETH0_RMII_TXD0	PB12	PG13		AF output push-pull(AF11)
ETH0_RMII_TXD1	PB13	PG12	PG14	AF output push-pull(AF11)
ETH1_MDC	PG6			AF output push-pull(AF6)
ETH1_RMII_REF_CLK	PH12			AF output push-pull(AF6)
ETH1_MDIO	PH14			AF output push-pull(AF6)
ETH1_RMII_CRS_DV	PH11			AF output push-pull(AF6)
ETH1_RMII_RXD0	PH8			AF output push-pull(AF6)
ETH1_RMII_RXD1	PH9			AF output push-pull(AF6)
ETH1_PPS_OUT	PG8			AF output push-pull(AF6)
ETH1_RMII_TX_EN	PG11			AF output push-pull(AF6)
ETH1_RMII_TXD0	PG13			AF output push-pull(AF6)
ETH1_RMII_TXD1	PG14	PG15		AF output push-pull(AF6)

43.3. Function overview

43.3.1. Interface configuration

The Ethernet block can transmit and receive Ethernet packets from an off-chip Ethernet PHY connected through the MII / RMII interface. MII or RMII mode is selected by software and carry on the PHY management through the SMI interface.

SMI: Station management interface

SMI is designed to access and configure PHY's configuration.

Station management interface (SMI) is performed through two wires to communicate with the external PHY: one clock line (MDC) and one data line (MDIO) . The maximum number of PHYs supported by this interface is 32. But at the same time only one register of a PHY can be accessed.

MDC and MDIO specific functions as follows:

- **MDC**: A clock of maximum frequency is 2.5 MHz. The pin remains low level when it is in idle state. The minimum high or low level lasts time of MDC must be 160ns, and the minimum period of MDC must be 400ns when it is in data transmission state.
- **MDIO**: Used to transfer data in conjunction with the MDC clock line, receiving data from external PHY or sending data to external PHY.

Figure 43-3. Station management interface signals

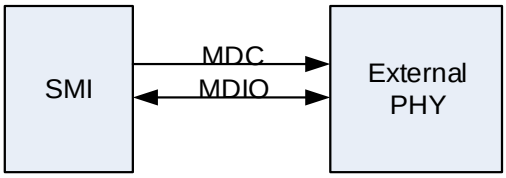

write operation

Applications need to write transmission data to the ENET_MAC_PHY_DATA register and operate the ENET_MAC_PHY_CTL register as follows:

1. Set the PHY device address and PHY register address, and set PW to 1, so that can select write mode;
2. Set PB bit to start transmission. In the process of transaction PB is always high until the transfer is complete. Hardware will clear PB bit automatically.

The application can be aware of whether a transaction is complete or not through checking PB bit. When PB is 1, it means the application should not change the PHY address register contents and the PHY data register contents because of operation is running. Before writing PB bit to 1, application must poll the PB bit until it is 0.

read operation

Applications need to operate the ENET_MAC_PHY_CTL register as follows:

1. Set the PHY device address and PHY register address and set PW to 0, so that can select read mode;
2. Set PB bit to start reception. In the process of transaction PB is always high until the transfer is complete. Hardware will clear PB bit automatically.

The application can be aware of whether a transaction is complete or not through checking PB bit. When PB is 1, it means the application should not change the PHY address register contents and the PHY data register contents because of operation is running. Before writing PB bit to 1, application must poll the PB bit until it is 0.

Note: Because the PHY register address 16-31 register function is defined by each manufacturer, access different PHY device's this part should see according to the manufacturer's manual to adjust the parameters of applications. Details of catalog that firmware library currently supports the PHY device can refer to firmware library related instructions.

clock configuration

The SMI clock is generated by dividing application clock (AHB clock). In order to guarantee the MDC clock frequency is no more than 2.5MHz, application should set appropriate division factor according to the different AHB clock frequency. ***Table 43-3. Clock range*** lists the frequency factor corresponding AHB clock selection.

Table 43-3. Clock range

AHB clock	MDC clock	Bits CLR[2:0] in ENET_MAC_PHY_CTL
250~300 MHz	AHB clock/124	0x5
150~250MHz	AHB clock/102	0x4
35~60MHz	AHB clock/26	0x3
20~35MHz	AHB clock/16	0x2
100~150 MHz	AHB clock/62	0x1
60~100MHz	AHB clock/42	0x0

MII / RMII selection

Before enable the Ethernet controller clocks or when the Ethernet controller is under the reset state, the application can select the MII or RMII mode by configuring bit 23 or bit 22 of the SYSCFG_PMCFG register ENET0_PHY_SEL/ENET1_PHY_SEL. The MII mode is set by default.

MII: Media independent interface

Figure 43-4. Media independent interface signals

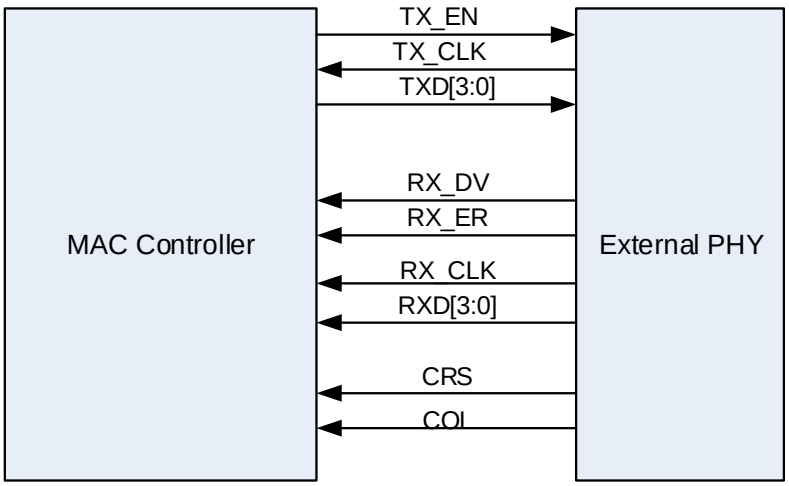

- **MII_TX_CLK**: clock signal for transmitting data. For the data transmission speed of 10Mbit / s, the clock is 2.5MHz, for the data transmission speed of 100Mbit / s, the clock is 25MHz.

- **MII_RX_CLK**: Clock signal for receiving data. For the data transmission speed of 10Mbit / s, the clock is 2.5MHz, for the data transmission speed of 100Mbit / s, the clock is 25MHz.

- **MII_TX_EN**: Transmission enable signal. This signal must be active when the first bit of the data preamble occurs. And it needs to remain active before the all bits transmission is completed.

- **MII_TXD[3:0]**: Transmit data line, each 4 bit data transfer, data is valid when the MII_TX_EN signal is effective. The PHY would ignore the transmitted data when the MII_TX_EN signal is non-effective.

- **MII_CRS**: Carrier sense signal, only working in Half-duplex mode and controlled by the PHY. This signal does not need to be synchronized with the MII_TX_CLK and MII_RX_CLK. When it is active, means that the transmit or receive medium is not in idle state. MII_CRS signal remains active until the transmit and receive medium are both in idle state.

- **MII_COL**: Collision detection signal, only working in Half-duplex mode, controlled by the PHY. This signal does not need to be synchronized with the MII_TX_CLK and MII_RX_CLK. It is active when a collision on the medium is detected and it will remain active while the collision condition continues.

- **MII_RXD[3:0]**: Receive data line, each 4 bit data transfer; data are valid when the MII_RX_DV signal is effective. Depending on the state of MII_RX_DV and MII_RX_ER, the MII_RXD[3:0] value can be used to convey some specific information (see ***Table 43-4. Rx interface signal encoding***).

- **MII_RX_DV**: Receive data valid signal, controlled by the PHY. This signal must be active when the first 4-bits of the frame data occurs. And it needs to remain active before the all bits transmission is completed. It must be inactive prior to the first clock cycle that follows the final 4-bit. MII_RX_DV signals should be effective before the SFD field appearing to ensure that receive the correct frame.

- **MII_RX_ER**: Receive error signal. In order to indicate that MAC detected an error in the receiving process, the MII_RX_ER signal must remain effective for one or more clock cycles (MII_RX_CLK). The specific error reason needs to cooperate with the state of the MII_RX_DV and the MII_RXD[3:0] data value (see ***Table 43-4. Rx interface signal encoding***).

Table 43-4. Rx interface signal encoding

Signal	Normal inter-frame		Normal reception frame data	False carrier indication	Data reception with errors
MII_RX_ER	0	1	0	1	1
MII_RX_DV	0	0	1	0	1
MII_RXD[3:0]	0000 to 1111	0000	0000 to 1111	1110	0000 to 1111

MII clock sources

The user needs to provide an external 25MHz clock to the external PHY to generate both TX_CLK and RX_CLK clock. This 25MHz clock does not require the same one with MAC clock. It can use the external 25MHz crystal or the output clock of microcontroller's CK_OUT0 pin. If the clock source is selected from CK_OUT0 pin, the MCU needs to configure the appropriate PLL to ensure the output frequency of CK_OUT0 pin is 25MHz.

RMII: Reduced media independent interface

The reduced media-independent interface (RMII) specification reduces the pin count during Ethernet communication. The MII specification defines 16 pins for data and control, according to the IEEE 802.3 standard. The RMII specification is dedicated to reduce the pin count to 7.

RMII characteristics:

- The clock signal needs to be increased to 50MHz and only one clock signal.
- MAC and external PHY use the same clock source.
- Using the 2-bit wide data transceiver.

Figure 43-5. Reduced media-independent interface signals

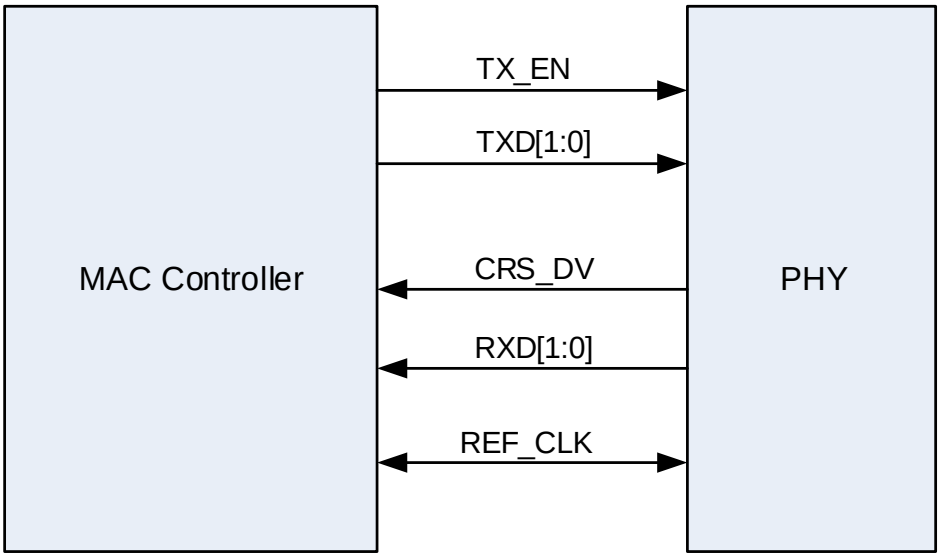

RMII clock sources

To ensure the synchronization of the clock source, the same clock source is selected for the MAC and external PHY which is called REF_CLK. The REF_CLK input clock can be connected to the external 50MHz crystal or microcontroller CK_OUT0 pin. If the clock source is from CK_OUT0 pin, then the MCU needs to configure the appropriate PLL to ensure the output frequency of CK_OUT0 pin is 50MHz.

MII / RMII bit transmission order

No matter which interface (MII or RMII) is selected, the bit order of transmit / receive is LSB first.

The deference between MII and RMII is bit number and sending times. MII is low 4bits first and then high 4bits, but RMII is the lowest 2bits, low 2bits, high 2bits and the highest 2bits.

For example: a byte value is: 10011101b (left to right order: high to low).
Transmission order for MII use 2 cycles: 1101 -> 1001 (left to right order: high to low, 1101 corresponding to MII_T/RXD[3] to MII_T/RXD[0]).
Transmission order for RMII use 4 cycles: 01 -> 11 -> 01 -> 10 (left to right order: high to low, 01 corresponding to RMII_T/RXD[1] to RMII_T/RXD[0]).

43.3.2. MAC function overview

The MAC module can work in two modes (Half-duplex mode and Full-duplex mode). The Half-duplex mode, with the CSMA/CD algorithm to contend for using of the physical medium, at

the same time only one transmission direction is active between two stations is active. The Full-duplex mode, simultaneous transmission and reception without any conflict mode, if all of the following conditions are satisfied: 1) PHY supports the feature of transmission and reception operations at the same time. 2) Only two devices connect to the LAN and the two devices are both configured for Full-duplex mode.

MAC module can achieve the follows functions: 1) The data packaging (transmission and reception), that includes detecting / decoding frame and delimitating frame boundary; handling source address and destination address; detecting error conditions. 2) The Medium access management in Half-duplex mode, that includes allocating medium in order to prevent conflicts; deal with conflicts.

Transmission process of MAC

All transactions are controlled by the dedicated DMA controller and MAC in Ethernet. After received the sending instruction, the TxDMA fetches the transmit frames from system memory and pushes them into the TxFIFO, then the data in TxFIFO are poped to MAC for sending on MII / RMII interface. The method of popping is according to the selected TxFIFO mode (Cut-Through mode or Store-and-Forward mode, the specific definition sees the next paragraph). For convenient, application can configure automatically hardware calculated CRC and insert it to the FCS domain of Ethernet frame function. The entire transmission process complete when the MAC received the frame termination signal from transmit FIFO. When transmission completed, the transmission status information will be composed of MAC and write return to the DMA controller, the application can query through the DMA current transmit descriptor.

Operation for popping data from FIFO to the MAC has two modes:

- In Cut-Through mode, the data in FIFO is ready to be popped to MAC once the number of bytes in the FIFO exceeds or equals the configured threshold level or when the end-of-frame flag in descriptor is written. User can configure the threshold level through the TTHC[2:0] in ENET_DMA_CTL
- In Store-and-forward mode, the data is ready to be popped to the MAC core only after complete frame is stored in the FIFO. But there is another condition where the frame is not completely written into the FIFO, and FIFO will also take out data. This is when the transmitted Ethernet frame is bigger than FIFO size, the frame is popped towards the MAC before the transmit FIFO becomes full.

Handle special cases

In the transmission process, due to the insufficient TxDMA descriptor or misuse of FTF bit in ENET_DMA_CTL register (when this bit is set, it will clear FIFO data and reset the FIFO pointer, after clear operation is completed, it will be reset), there will be a transmit data underflow fault occurs because of insufficient data in FIFO. At the same time MAC will identify such data underflow state and write relevant status flag.

If one transmit frame uses two TxDMA descriptors for sending data, then the first segment (FSG) and the last segment (LSG) of the first descriptor should be 10b and the second ones

should be 01b.If both the FSG bit of the first and the second descriptor are set and the LSG bit in the first descriptor is reset, then the FSB bit of the second descriptor will be ignored and these two descriptors are considered to sending the only one frame.

If the byte length of one transmission MAC frame's data field is less than 46 (for Tagged MAC frame is less than 42), application can configure the MAC for automatically adding a load of content of '0' bit to make the byte length of frame's data field in accordance with the relevant domain of definition of IEEE802.3 specification. At the same time, if automatically adding zeros function is performed, the MAC will certainly calculate CRC value of the frame and append it to the frame's FCS field domain no matter what configuration of DCRC bit in the descriptor is.

Transmission management of MAC

Jabber timer

In case of one station occupies the PHY for a long time, there is a jabber timer designed for cutting off the frame whose length is more than 2048 bytes. By default, jabber timer is enabled so when application is transmitting a frames whose byte length is more then 2048, the MAC will only transmit 2048 bytes and drop the last ones.

Collision condition solve mechanism – Re-transmission

When the MAC is running under Half-duplex mode, collision may happen when MAC is transmitting frame data on interface. When no more than 96 bytes data popped from FIFO towards MAC and collision condition occurs, the re-transmission function is active. In this case, MAC will stop current transmitting and then read frame data from FIFO again and send them on interface again. When more than 96 bytes data popped from FIFO towards MAC and collision condition occurs, MAC will abort transmitting current frame data and not re-transmit it. Also MAC will set late collision flag in descriptor to inform application.

Transmit FIFO flush operation

Application can clear TxFIFO and reset the FIFO data pointer by setting FTF bit of ENET_DMA_CTL register. The flush operation will be executed at once no matter whether TxFIFO is popping data to MAC. This results in an underflow event in the MAC transmitter, and the makes frame transmission abort. At the same time, MAC returns state information of frame and transmit status words transferred to the application. The status of such a frame is marked with both underflow and frame flush events (FRMF and UFE bits in Transmit Descriptor0). When the transmit data in TxFIFO is flushed, the transmit status word will be written back to descriptor. After the status is written, the flush operation is complete. When a flush operation is received, all the following data which should be popped from TxFIFO into MAC will be dropped unless a new FSG bit of descriptor is received. After operation completed, the FTF bit of ENET_DMA_CTL register is then automatically cleared.

Transmit inter-frame gap management

MAC can manage the interval time between two frames. This interval time is called frame gap time. For Full-duplex mode, after complete sending a frame or MAC entered idle state, the gap time counter starts counting. If another transmit frame presents before this counter has not reach the configured IGBS bit time in ENET_MAC_CFG register, this transmit frame will be pended unless the counter reach the gap time. But if the second transmit frame presents after the gap time counter has reached the configured gap time, this frame will send immediately. For Half-duplex mode, the gap time counter follows the Truncated Binary Exponential Backoff algorithm. Briefly speaking, the gap time counter starts after the previous frame has completed transmitting on interface or the MAC entered idle state, and there are three conditions may occur during the gap time:

- The carrier sense signal active in the first 2 / 3 gap period. In this case, the counter will reload and restart.
- The carrier sense signal active in the last 1 / 3 gap period. In this case, the counter will not reload but continue counting, and when reaches gap time, the MAC sends the second frame.
- The carrier sense signal not active during the whole gap period. In this case, the counter stops after reaches the configured gap time and sends frame if the second frame has pended.

Address receive module

The MAC filter is divided into error filtering (such as too short frame, CRC error and other bad frame filtering) and address filtering. This section mainly describes the address filtering.Address filtering use the static physical address (MAC address) filter and hash list filter for implementing the function. If the FAR bit in the ENET_MAC_FRMF register is '0' (by default), only the frame passed the filter will be received. This function is configured according to the parameters of the application (frame filter register) to filter the destination or / and source address of unicast or multicast frame (The difference between an individual address and a group address is determined by I / G bit in the destination address field) and report the result of the corresponding address filtering. The frame not pass through the filter will be discarded.

Note: If the FAR bit in the ENET_MAC_FRMF register is set to 1, frames are all thought passed the filter. In this case, even the filter result will also be updated in receive descriptor but the result will not affect whether current frame passes the filter or not.

Unicast frame destination address filter

For a unicast frame, application has two modes for filtering: the one is using static physical address (by setting HUF bit to ‘0’), the other is using hash list (by setting HUF bit to ‘1’).

- Static physical address (SPA) filtering.

In the filter mode, MAC supports using four MAC addresses for unicast frame filtering. In this

way, the MAC compares all 6 bytes of the received unicast address to the programmed MAC address. MAC address 0 is always used and MAC address 1 to address 3 can be configured to use or not. Each byte of MAC address 1 to MAC address 3 register can be masked for comparison with the corresponding destination address byte of received frame by setting the corresponding mask byte bits (MB) in the corresponding register.

- Hash list filtering

In this filter mode, MAC uses a HASH mechanism. MAC uses a 64-bit hash list to filter the received unicast frame. This filter mode obeys the followings two filtering steps:

1. The MAC calculates the CRC value of the received frame's destination address.
2. Using the high 6 bits of the calculated CRC value as the index to retrieve the hash list. If the corresponding value of hash list is 1, the received frame passes through the filter, conversely, fail the filter.

The advantage of this type of filter is that it can cover any possible address just using a small table. But the disadvantage is that the filter is imperfect and sometimes the frames should be dropped are also be received by mistake.

Unicast frame source address filter

Enable MAC address 1 to MAC address 3 register and set the corresponding SAF bit in the MAC address high register, the MAC compares and filter the source address (SA) field in the received frame with the values programmed in the SA registers. MAC also supports the group filter on the source address. If the SAFLT bit in frame filter register ENET_MAC_FRMF is set, MAC drops the frame that failed the source address filtering; meanwhile the filter result will reflect by SAFF bit in Receive Descriptor0 of DMA receive descriptor. When the SAFLT bit is set, the destination address filter is also at work, so the result of the filter is simultaneous determined by DA and SA filter. This means that, as long as a frame does not pass any one of the filters (DA filter or SA filter), it will be discarded. Only a frame passing the entire filter can be forwarded to the application.

Multicast frame destination address filter

Application can enable the multicast frame MAC address filtering by cleaning the MFD bit in register ENET_MAC_FRMF. By configuring the value of HMF bit in ENET_MAC_FRMF register application can choose two ways just like unicast destination address filtering for address filtering.

Broadcast frame destination address filter

At default, the MAC unconditionally receives the broadcast frames. But when setting BFRMD bit in register ENET_MAC_FRMF, MAC discards all received broadcast frames.

Hash or perfect address filter

By setting the HPFLT bit in the ENET_MAC_FRMF register and setting the corresponding

HUF (for unicast frame) or HMF (for multicast frame) bit in the ENET_MAC_FRMF register, the destination address (DA) filter can be configured to pass a frame when its DA matches either the hash list filter or the static physical address filter.

Reverse filtering operation

MAC can reverse filter-match result at the final output whether the destination address filtering or source address filtering. By setting the DAIFLT and SAIFLT bits in ENET_MAC_FRMF register, this address filter reverse function can be enabled. DAIFLT bit is used for unicast and multicast frames' DA filtering result, SAIFLT bit is used for unicast and multicast frames SA filtering result.

The ***Table 43-5. Destination address filtering table*** and ***Table 43-6. Source address filtering table*** summarize the destination address and source address filters working condition at different configuration.

Table 43-5. Destination address filtering table

Frame Type	PM	HPFLT	HUF	DAIFLT	HMF	MFD	BFRMD	DA filter operation
Broadcast	1	-	-	-	-	-	-	Pass
	0	-	-	-	-	-	0	Pass
	0	-	-	-	-	-	1	Fail
Unicast	1	-	-	-	-	-	-	Pass all frames
	0	-	0	0	-	-	-	Pass on perfect / group filter match
	0	-	0	1	-	-	-	Fail on perfect / group filter match
	0	0	1	0	-	-	-	Pass on hash filter match
	0	0	1	1	-	-	-	Fail on hash filter match
	0	1	1	0	-	-	-	Pass on hash or perfect / group filter match
	0	1	1	1	-	-	-	Fail on hash or perfect / group filter match
Multicast	1	-	-	-	-	-	-	Pass all frames
	-	-	-	-	-	1	-	Pass all frames
	0	-	-	0	0	0	-	Pass on perfect / group filter match and drop PAUSE control frames if PCFRM = 0x
	0	0	-	0	1	0	-	Pass on hash filter match and drop PAUSE control frames if PCFRM = 0x
	0	1	-	0	1	0	-	Pass on hash or perfect / group filter match and drop PAUSE control frames if PCFRM = 0x

	0	-	-	1	0	0	-	Fail on perfect / group filter match and drop PAUSE control frames if PCFRM = 0x
	0	0	-	1	1	0	-	Fail on hash filter match and drop PAUSE control frames if PCFRM = 0x
	0	1	-	1	1	0	-	Fail on hash or perfect / group filter match and drop PAUSE control frames if PCFRM = 0x

Table 43-6. Source address filtering table

Frame type	PM	SAIFLT	SAFLT	SA filter operation
Unicast	1	-	-	Pass all frames
	0	0	0	Pass status on perfect / group filter match but do not drop frames that fail
	0	1	0	Fail status on perfect / group filter match but do not drop frame
	0	0	1	Pass on perfect / group filter match and drop frames that fail
	0	1	1	Fail on perfect / group filter match and drop frames that fail

Promiscuous mode

If the PM bit in ENET_MAC_FRMF register is set, promiscuous mode is enable. Then the address filter function is bypassed, all frames are thought passed through the filter. At the same time the receive status information DA / SA error bit is always '0'.

Pause control frame filter

When MAC received pause frame, it will detect 6 bytes DA field in the frame. If UPFDT bit in ENET_MAC_FCTL register is 0, it is determined by whether the value of the DA field conforms to the unique value (0x0180C2000001) with IEEE-802.3 specification control frames. If UPFDT bit in ENET_MAC_FCTL register is set, MAC additionally compares DA field with the programmed MAC address for bit match. If DA field match and receive flow control is enabled (RFCEN bit in ENET_MAC_FCTL register is set), the corresponding pause control frame function will be triggered. Whether this filter passed pause frame is forwarded to memory is depending on the PCFRM[1:0] bit in ENET_MAC_FRMF register.

Reception process of MAC

Received frames will be pushed to the RxFIFO. The MAC strips the preamble and SFD of the frame, and starts pushing the frame data beginning with the first byte following the SFD to the RxFIFO. If IEEE 1588 time stamp function is enabled, the MAC will record the current system time when a frame's SFD is detected. If the frame passes the address filter, this time stamp

is passed on to the application by writing it to descriptor.

The MAC can automatically strip PAD and FCS field data when the length / type field of received frame is less than 1536 if APCD bit is set. MAC pushes the data of the frame into RxFIFO up to the count specified in the length / type field, then starts dropping bytes (including the FCS field). If the value of length / type field is greater than or equal to 0x600, the automatically strip FCS field function is configured by the TFCD bit regardless of APCD.

If the watchdog timer is enabled (WDD bit in ENET_MAC_CFG is reset), a frame has more than 2048 bytes will be cut off receiving when has received 2048 bytes. If the watchdog timer is disabled, the MAC can extend the max receiving data bytes to 16384, any data beyond this number will be cut off.

When RxFIFO works at Cut-Through mode, it starts popping out data from RxFIFO when the number of FIFO is greater than threshold value (RTHC bits in ENET_DMA_CTL register). After all data of a frame pop out, receive status word is sent to DMA for writing back to descriptor. In this mode, if a frame has started to forward to application by DMA from FIFO, the forwarding will continue until the frame is end even if frame error is detected. Although the error frame is not discarded, the error status will reflect in descriptor status field.

When RxFIFO works at Store-and-Forward mode (set by RSFD bit in ENET_DMA_CTL), DMA reads frame data from RxFIFO only after RxFIFO has completed received the whole frame. In this mode, if the MAC is configured to discard all error frames, then only valid frames without any error can be read out from RxFIFO and forward to the application. Once the MAC detects an SFD signal on the interface, a receive operation is started. The MAC strips the preamble and SFD before processing the frame. The header fields are checked by filtering and the FCS field used to verify the CRC for the frame. The frame is discarded by MAC if it fails to pass the address filter.

Reception management of MAC

Receive operation on multi-frame handling

It is different from transmit operation, after receiving the last byte of a frame, the MAC can judge the status of the receiving operation, so the second received frame's forwarding is surely followed by the first received frame data and status.

Error handling

- If RxFIFO becomes full but the last received byte is not the end of frame (EOF), the RxFIFO will discard the whole frame data and return an overflow status. Also the counter of counting the overflow condition times will plus 1.
- If the RxFIFO is configured in Store-and-Forward mode, the MAC can filter and discard all error frames. But according to the configuration of FERF and FUF bit in ENET_DMA_CTL register, RxFIFO can also receive and forward such error frame and the frame that length is less than the minimum length.

- If the RxFIFO is configured in Cut-Through mode, not all the error frames can be dropped. Only when the start of frame (SOF) has not been read from RxFIFO and the receive frame has been detected error status, the RxFIFO will discard the whole error frame.

Flow control module

The MAC manages transmission frame through back pressure (in Half-duplex mode) and the pause control frame (in Full-duplex mode) for flow control.

- Half-duplex mode flow control: Back Pressure

When MAC is configured in Half-duplex mode, there are two conditions to trigger the back pressure feature. Both of the two conditions are triggered to enable back pressure function which is implemented by sending a special pattern (called jam pattern) 0x5555 5555 once to notify conflict to all other sites. The first condition is triggered by application setting the FLCB / BKPA bit in ENET_MAC_FCTL register. The second condition occurs during receiving frame. When MAC receiver is receiving frame, the byte number of RxFIFO is more and more great. When this number is greater than the high threshold (RFA bits in ENET_MAC_FCTH), MAC will set the back pressure pending flag. If this flag is set and a new frame presents on interface, MAC will send a jam pattern to delay receiving this new frame a back pressure time. After this back pressure time is end, external PHY will send this new frame again. If the number of the RxFIFO is not less than low threshold (RFD bits in ENET_MAC_FCTH) during this back pressure time, a jam pattern is send again. If the number of the RxFIFO is less than low threshold (RFD bits in ENET_MAC_FCTH) during this back pressure time, MAC resets the back pressure pending flag and is enable to receive the new frame instead of sending jam pattern.

- Full-duplex mode flow control: Pause Frame

The MAC uses a mechanism named "pause frame" for flow control in Full-duplex mode. Receiver can send a command to the sender for informing it to suspend transmission a period of time. If the application sets transmit flow control bit TFCEN in ENET_MAC_FCTL register, MAC will generate and transmit a pause frame when either of two conditions is satisfied in Full-duplex mode. There are two conditions to start transmit pause frames:

1. Application sets FLCB / BKPA bit in ENET_MAC_FCTL register to immediately send a pause frame. When doing this, MAC sends a pause frame right now with the pause time value PTM configured in ENET_MAC_FCTL register. If application considers the pause time is no need any more because the transmit frame can be transmitted without pause time, it can end the pause time by setting the pause time value PTM bits in ENET_MAC_FCTL register to 0 and set FLCB / BKPA bit to send this zero pause time frame.

2. MAC automatically sends pause time when the RxFIFO is in some condition. When MAC is receiving frame, RxFIFO will be fill in many receive data. At same time RxFIFO pops out data to RxDMA for forwarding to memory. If the popping frequency is lower than MAC pushing frequency, the number of bytes in RxFIFO is getting great. Once the data

amount in RxFIFO is greater than the active threshold value (RFA bits in ENET_MAC_FCTH) of flow control, MAC will send a pause frame with PTM value in it. After sending pause frame, MAC will start a counter with configured reload value PLTS in ENET_MAC_FCTL register, when configured PLTS time has spent, the MAC will check RxFIFO again. If the byte number in RxFIFO is also greater than active threshold value, the MAC sends a pause time again. When the byte number of RxFIFO is lower than the de-active threshold value, MAC maybe send a pause frame with zero time value in frame's pause time field if DZQP bit in ENET_MAC_FCTL register is reset. This zero-pause time frame can inform send station that RxFIFO is almost empty and can receive new data again.

The MAC manages reception frames through follow method for flow control:In Full-duplex mode, the MAC can detect the pause control frames, and perform it by suspending a certain time which is indicated in pause time field of detected pause control frame and then to transmit data. This function can set by RFCEN bit in ENET_MAC_FCTL register. If this function is not enabled, the MAC will ignore the received pause frames. If this function is enabled, MAC can decode this frame. Type field, opcode field and pause time field in the frame are all recognized by the MAC. During the pause time period, if MAC received a new pause frame, the new pause time filed value is loaded to the pause time counter immediately. If the new pause time filed is zero, then the pause time counter stops and transmit operation recovers. Application can configure PCFRM bit in ENET_MAC_FRMF register to decide the solving method for such control frame.

Checksum offload engine

The MAC supports transmit checksum offload. This feature can calculate checksum and insert it in the transmit frame, and detect error in the receive frame.

The follows describes the operation of transmit checksum offload.

Note: This function is enabled only when the TSFD bit in the ENET_DMA_CTL register is set (TxFIFO is configured to Store-and-Forward mode) and application must ensure the TxFIFO deep enough to store the whole transmit frame. If the depth of the TxFIFO is less than the frame length, the MAC only does calculation and insertion for IPv4 header checksum field.

Refer to IETF specifications RFC 791, RFC 793, RFC 768, RFC 792, RFC 2460 and RFC 4443 for IPv4, TCP, UDP, ICMP, IPv6 and ICMPv6 packet header specifications, respectively.

- IP header checksum

If the value is 0x0800 in type field of Ethernet frame and the value is 0x4 in the IP datagram's version field, checksum offload module marks the frame as IPv4 package and calculated value replace the checksum field in frame. Because of IPv6 frame header does not contain checksum field, the module will not change any value of the IPv6's header field. After IP header checksum calculation end, the result is stored in IPHE bit (In Transmit Descriptor0). The following shows the conditions under which the IPHE bit can be set:

  - For IPv4 frame type:

A) . Type field is 0x0800 but version filed in IP header is not 0x4.

B) . IPv4 header length field value is greater than total frame byte length.

C) . The value of IPv4 header length field is less than 0x5 (20 bytes).

- For IPv6 frame type:

A) . Type field is 0x86dd but version field in IP header is not 0x6.

B) . Before the IPv6 standard header or extension header has been completely received the frame is end. The length of IPv6 standard header is 40 bytes, and the extension header contains corresponding header length field.

■ TCP / UDP / ICMP payload checksum

The checksum offload module processes the IPv4 or IPv6 header (including extension headers) and marks the type of frame (TCP, UDP or ICMP).

But when the following frame cases are detected, the checksum offload function will be bypassed and these frames will not be processed by the checksum offload module:

- Incomplete IPv4 or IPv6 frames.
- IP frames with security features (e.g. authentication header, security payload).
- IP frames without TCP / UDP / ICMPv4 / ICMPv6 payload.
- IPv6 frames with routing headers.

The checksum offload module calculates the payload (TCP, UDP, or ICMP) and inserts the result into its corresponding field in the header. It has two modes when working, as follows:

1. The checksum calculation does not include TCP, UDP, or ICMPv6 pseudo-headers and assumes that the checksum field of the input frame already has the value. The checksum calculation includes checksum field, and the value of the original checksum field is replaced after the calculation is completed.

2. Checksum offload module clears the contents of the checksum field in the transmission frame and make calculation which includes TCP, UDP, or ICMPv6 pseudo-header data and will instead the transmission frame's original checksum field by the final calculation results.

After calculated by checksum offload module, the result can be found in IPPE bit of Transmit Descriptor0. The following shows the conditions under which the IPPE bit can be set:

1. In Store-and-Forward mode, frame has been forwarded to MAC transmitter but no EOF is written to TxFIFO.

2. Frame is ended but the byte numbers which the payload length field of the frame indicates has not been reached.

If the packet length is greater than the marked length, checksum module does not report errors, the excess data will be discarded as padding bytes. If the first condition of IPPE error is detected, the value of the checksum does not insert a TCP, UDP or ICMP header. If the second condition of IPPE error is detected, checksum calculation results will still insert the appropriate header fields.

Note: For ICMP packets over IPv4 frame, the checksum field in the ICMP packet must always be 0x0000 in both modes due to such packets are not defined pseudo-headers.The follows describes the operation of receive checksum offload.

Receive checksum offload is enabled when IPFCO bit in ENET_MAC_CFG register is set. Receive checksum offload can calculate the IPv4 header checksum and check whether it matches the contents of the IPv4 header checksum field. The MAC identifies IPv4 or IPv6 frames by checking for the value of 0x0800 or 0x86DD respectively in the received Ethernet frame type field. This method is also used to identify frames with VLAN tags. Header checksum error bits in DMA receive descriptor (the IPHERR bit in Receive Descriptor0) reflects the header checksum result. This bit is set if received IP header has the following errors:

- Any mismatch between the IPv4 calculation result by checksum offload module and the value in received frame's checksum field.
- Any inconsistent between the data type of Ethernet type field and IP header version field.
- Received frame length is less than the length indicated in IPv4 header length field, or IPv4 or IPv6 header is less than 20 bytes.

Receive checksum offload also identifies the data type of the IP packet is TCP, UDP or ICMP, and calculate their checksum according to TCP, UDP or ICMP specification. Calculation process can include data of TCP / UDP / ICMPv6 pseudo-header. Payload checksum error bits in DMA receive descriptor (the PCERR bit in Receive Descriptor0) reflects the payload checksum result. This bit is set if received IP payload has the following errors:

- Any mismatch between the TCP, UDP or ICMP checksum calculation result by checksum offload and the received TCP / UDP / ICMP frame's checksum field.
- Any inconsistent between the received TCP, UDP or ICMP data length and length of IP header.

The received checksum offload does not calculate the following conditions: Incomplete IP packets, IP packets with security features, packets of IPv6 routing header and data type is not TCP, UDP or ICMP.

MAC loopback mode

Often, loopback mode is used for testing and debugging hardware and software system for application. The MAC loopback mode is enabled by setting the LBM bit in ENET_MAC_CFG register. In this mode, the MAC transmitter sends the Ethernet frame to its own receiver. This mode is disabled by default.

43.3.3. DMA controller description

Ethernet DMA controller is designed for frame transmission between FIFO and system memory which can reduce the occupation of CPU. Communication between the CPU and the DMA is achieved by the two kinds of data structures. Which are descriptor table (ring or chain type) and data buffer, and control and status register.

Applications need to provide the memory for storage of descriptor tables and data buffers. Descriptors that reside in the memory act as pointers to these buffers. Transmission has transmission descriptor and reception has reception descriptor. The base address of each table is stored in ENET_DMA_TDTADDR and ENET_DMA_RDTADDR register. Descriptors of transmission constituted by 4 descriptor word (Transmit Descriptor0-3) when DFM=0 and 8 descriptor word (Transmit Descriptor0-7) when DFM=1 (Enhanced descriptor mode). Likewise, reception descriptors constituted by 4 descriptor word (Receive Descriptor0-3) when DFM=0 and 8 descriptor word (Receive Descriptor0-7) when DFM=1. Each descriptor can point to a maximum of two buffers. The value of the buffer 2 can be programmed to the second data address or the next descriptor address which is determined by the configured descriptor table type: Ring or Chain. Buffer space only contains frame data which are located in host's physical memory space. One buffer can store only one frame data but one frame data can be stored in more than one buffer which means one buffer can only store a part of a frame. When chain structure is set, descriptor table is an explicitly one and when ring structure is set, descriptor table is an implicitly one. Explicit chaining of descriptors is accomplished by configuring the second address chained in both receive and transmit descriptors (configure RCHM bit in the Receive Descriptor1 and TCHM bit in the Transmit Descriptor0), at this time Receive Descriptor2 and Transmit Descriptor2 are stored the data buffer address, Receive Descriptor3 and Transmit Descriptor3 should be stored the next descriptor address, this connection method of descriptor table is called chain structure. Implicitly chaining of descriptors is accomplished by clearing the RCHM bit in the Receive Descriptor1 and TCHM bit in the Transmit Descriptor0, at this time Receive Descriptor2/Transmit Descriptor2 and Receive Descriptor3/Transmit Descriptor3 should be all stored the data buffer address, this connection method of descriptor table is called ring structure. When current descriptor's buffer address is used, descriptor pointer will point to the next descriptor. If chain structure is selected, the pointer points to the value of buffer 2. If ring structure is selected, the pointer points to an address calculated as below:

DFM=0: Next descriptor address = Current descriptor address + 16 + DPSL * 4

DFM=1: Next descriptor address = Current descriptor address + 32 + DPSL * 4

If current descriptor is the last one in descriptor table, application needs to set the TERM bit in Transmit Descritor0 or RERM bit in Receive Descritor1 to inform DMA the current descriptor is the last one of the table in ring structure. At this time, the next descriptor pointer points back to the first descriptor address of the descriptor table. In chain structure, can also set Receive Descriptor3 and Transmit Descriptor3 value to point back to the first descriptor address of the descriptor table. The DMA skips to the next frame buffer when the end of frame is detected.

Figure 43-6. Descriptor ring and chain structure

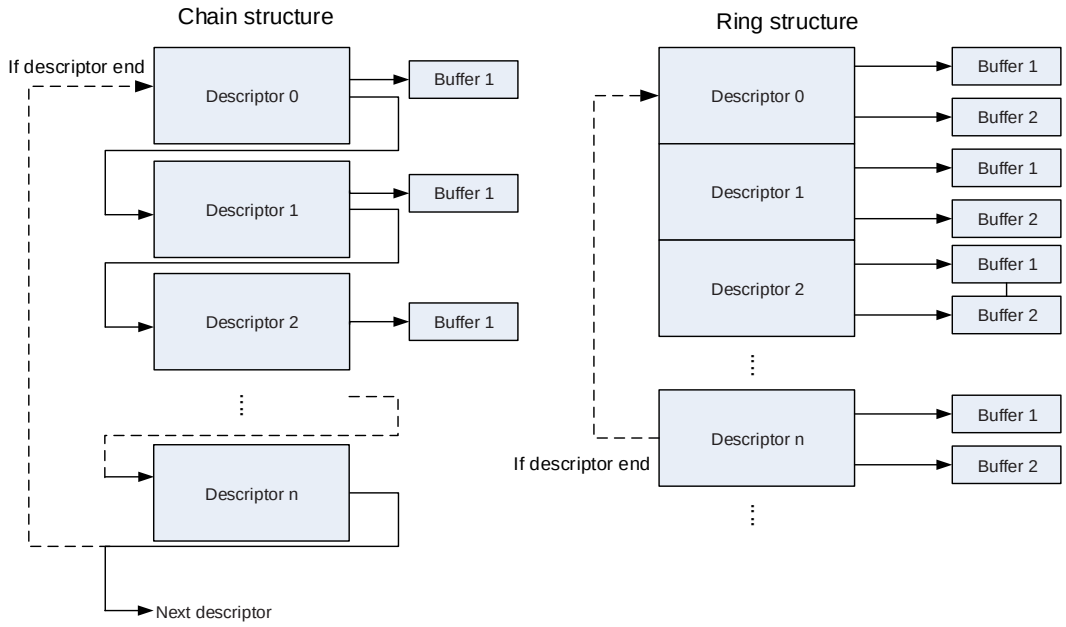

Alignment rule for data buffer address

The DMA controller supports all alignment types: byte alignment, half-word alignment and word alignment. This means application can configure the buffer address to any address. But during the operation of the DMA controller, access address is always word align and is different between write and read access. Follow example describes the detail:

- Buffer Reading: Assuming the transmit buffer address is 0x2000 0AB2, and 15 bytes need to be transferred. After starting operating, the DMA controller will read five word addresses which are 0x2000 0AB0, 0x2000 0AB4, 0x2000 0AB8, 0x2000 0ABC and 0x2000 0AC0. But when sending data to the FIFO, the first two bytes (0x2000 0AB0 and 0x2000 0AB1) and the last 3 bytes (0x2000 0AC1, 0x2000 0AC2 and 0x2000 0AC3) will be dropped.
- Buffer Writing: Assuming the receive buffer address is 0x2000 0CD2, and 16 bytes need to be stored. After starting operating, the DMA controller will write five times 32-bit data from address 0x2000 0CD0 to 0x2000 0CE0. But the first 2 bytes (0x2000 0CD0 and 0x2000 0CD1) and the last 2 bytes (0x2000 0CE2 and 0x2000 0CE3) will be substituted by the virtual bytes.

Note: DMA controller will not write any data out of the defined buffer range.

The effective length of the buffer

For the frame transmitting process, the effective length of the buffer is the same as the value configured by application in Transmit Descriptor1. As mentioned before, a transmitting frame can use one or more descriptors to indicate the frame information which means a frame data can be located in many buffers. When the DMA controller reads a descriptor which the FSG bit in Transmit Descriptor0 is set, it knows the current buffer is pointing to a new frame and

the first byte of the frame is included. When the DMA controller reads a descriptor with FSG bit and LSG bit in Transmit Descriptor0 are both reset, it knows the current buffer is pointing to a part of current frame. When the DMA controller reads a descriptor with LSG bit in Transmit Descriptor0 is set, it knows the current buffers is pointing to the last part of the current frame. Normally one frame is stored only in one buffer (because buffer size is large enough for a normal frame), so FSG bit and LSG bit are set in the same descriptor.

For the frame receiving process, the receive buffer size must be word align. But for word-align buffer address or not word-align buffer address, the operation is different from transmitting. When the receive buffer address is word align, it's no difference with transmitting process, the effective length of the buffer is the same as the value configured by application in Receive Descriptor1. When the receive buffer address is not word align, the effective length of the buffer is less than the value configured by application in Receive Descriptor1. The effective length of the buffer should be the size value minus the low two bits value of buffer address. For example, assuming the total buffer size is 2048 bytes and buffer address is 0x2000 0001, the low two bits are 0b01, the effective length of the buffer is 2047 bytes whose address range is from 0x20000001 (for the first received frame byte) to 0x2000 07FF.

When a start of frame (SOF) is received, the FSG bit is set by DMA controller and when the end of the frame (EOF) is received, the LSG bit is set. If the receive buffer size is programmed to be large enough to store the whole frame, the FSG and the LSG bit are set in the same descriptor. The actual frame length FRML can be read from Receive Descriptor0. So application can calculate the left unused buffer space. The RxDMA always uses a new descriptor to receive the start of next frame.

Arbitration for TxDMA and RxDMA controller

There are two types of arbitration method designed for improving the efficiency of DMA controller between transmission and reception: fixed-priority and round-robin. When DAB bit in ENET_DMA_BCTL register is reset, arbiter selects round-robin method. The arbiter allocates the data bus in the ratio set by the RTPR bits in ENET_DMA_BCTL, when both of TxDMA and RxDMA controller request access simultaneously. When DAB bit in ENET_DMA_BCTL register is set, arbiter selects fixed-priority, and the RxDMA controller always has higher priority over the TxDMA.

DMA error status

During the operation of the DMA controller, when a response error presents on the bus, the DMA controller considers a fatal error occurs and stops operating at once with error flags written to the DMA status register (ENET_DMA_STAT). After such fatal error (response error) occurs, application must reset the Ethernet module and reinitialize the DMA controller.

DMA controller initialization for transmission and reception

Before using the DMA controller, the initialization must be done as follow steps:

1. Set the bus access parameters by writing the ENET_DMA_BCTL register;
2. Mask unnecessary interrupt source by configuring the ENET_DMA_INTEN register;
3. Program the Tx and Rx descriptor table start address by writing the ENET_DMA_TDTADDR register and the ENET_DMA_RDTADDR register;
4. Configure filter option by writing related registers;
5. According to the auto-negotiation result with external PHY, set the SPD bit and DPM bit for selecting the communication mode (Half-duplex / Full-duplex) and the communication speed (10Mbit / s or 100Mbit / s). Set the TEN and REN bit in ENET_MAC_CFG register to enable MAC transmit and receive operations;
6. Set STE bit and SRE bit in ENET_DMA_CTL register to enable TxDMA controller and RxDMA controller.

Note: If the HCLK frequency is too much low, application can enable RxDMA before set REN bit in ENET_MAC_CFG register to avoid RxFIFO overflow at start time.

Transmit process of DMA

As mentioned before, a frame can span over several buffers which means several descriptors. When the FSG bit is set, the descriptor indicates the start of the frame and when the LSG bit is set, the descriptor indicates the end of the frame. All the buffers among these descriptors store the whole frame data. When the last descriptor is fetched and buffer finished reading, the transmitting status will write back to it. The other descriptors (here means the descriptor whose LSG bit is reset) of the current frame will not be changed by TxDMA controller except the DAV bit will be reset to 0. After starting transfer frame data from memory to FIFO, the transmitting has not actually start. The real start time for sending frame on interface is depended on TxDMA mode: Cut-Through mode or Store-and-Forward mode. The former mode starts sending when the byte number of FIFO is greater than configured threshold and the latter mode starts sending when the whole frame data are transferred into FIFO or when the FIFO is almost full.

Transmission management of DMA

Operate on second frame in buffer

When OSF bit in ENET_DMA_CTL is reset, the order of the transmitting is follows: the first is reading transmit descriptor, followed by reading data from memory and writing to FIFO, then sending frame data on interface through MAC and last wait frame data transmitting complete and writing back transmitting status.

Above procedure is TxDMA's standard transmitting procedure but when HCLK is much faster than TX_CLK, the efficiency of transmitting two frames will be greatly reduced.

To avoid the case mentioned above, application can set OSF to 1. If so, the second frame data can be read from the memory and push into FIFO without waiting the first frame's status writing back. OSF function is only performed between two neighboring frames.

TxDMA operation mode (A) (default mode): Non-OSF

The TxDMA controller in Non-OSF mode proceeds as follows:

1. Initialize the frame data into the buffer space and configure the descriptor (Transmit Descriptor0-3) with DAV bit of Transmit Descriptor0 sets to 1;
2. Enable TxDMA controller by setting STE bit in ENET_DMA_CTL register;
3. The TxDMA controller starts continue polling and performing transmit descriptor. When the DAV bit in Transmit Descriptor0 that TxDMA controller read is cleared, or any error condition occurs, the controller will enter suspend state and at the same time both the transmit buffer unavailable bit in ENET_DMA_STAT and normal interrupt summary bit in ENET_DMA_STAT register are set. If entered into suspend state, operation proceeds to Step 8;
4. When the DAV bit in Transmit Descriptor0 of the acquired descriptor is set, the DMA decodes the transmit frame configured and the data buffer address from the acquired descriptor;
5. DMA retrieve data from the memory and push it into the TxFIFO of MAC;
6. The TxDMA controller continues polling the descriptor table until the EOF data (LSG bit is set) is transferred. If the LSG bit of current descriptor is reset, it will be closed by resetting the DAV bit after all buffer data pushed into TxFIFO. Then the TxDMA controller waits to write back descriptor status and IEEE 1588 timestamp value if enabled;
7. After the whole frame is transferred, the transmit status bit (TS bit in ENET_DMA_STAT register) is set only when INTC bit in Transmit Descriptor0 is set. Also an interrupt generates if the corresponding interrupt enable flag is set. The TxDMA controller returns to Step 3 for the next frame;
8. In the suspend state, application can make TxDMA returns to running state by writing any data to ENET_DMA_TPEN register and clearing the transmit underflow flag. Then the TxDMA controller process turns to Step 3.

TxDMA operation mode (B): OSF

The TxDMA controller supports transmitting two frames without waiting status write back of the first frame, this mode is called operation on second frame (OSF). When the frequency of system is much faster than the frequency of the MAC interface (10Mbit / s or 100Mbit / s), the OSF mode can improve the sending efficiency. Setting OSF bit in ENET_DMA_CTL register can enable this mode. When the TxDMA controller received EOF of the first frame, it will not enter the state of waiting status write back but to fetch the next descriptor, if the DAV bit and FSG bit of the next descriptor is set, the TxDMA controller immediately read the second frame data a push them into the MAC FIFO.

The TxDMA controller in OSF mode proceeds as follows:

1. Follow steps 1-6 operation in TxDMA default mode;
2. The TxDMA controller retrieves the next descriptor without closing the previous frame's last descriptor in which the LSG bit is set;

3. If the DAV bit of the next descriptor is set, the TxDMA controller starts reading the next frame's data from the buffer address. If the DAV bit of the next descriptor is reset, TxDMA controller enters suspend state and the next operation goes to Step 7;
4. TxDMA controller continues polling descriptor and frame data until the EOF is transferred. If a frame is described with more than one descriptor, the intermediate descriptors are all closed by TxDMA controller after fetched;
5. The TxDMA controller enters the state of waiting for the transmission status and time stamp of the previous frame (if timestamp enabled). With writing back status to descriptor, the DAV bit is also cleared by TxDMA controller;
6. After the whole frame is transferred, the transmit status bit (TS bit in ENET_DMA_STAT register) is set only when INTC bit in Transmit Descriptor0 is set. Also an interrupt generates if the corresponding interrupt enable flag is set. The TxDMA controller returns to Step 3 for the next frame if no underflow error occurred in previous frame. If underflow error of the previous frame is occurred, the TxDMA controller enters in suspend state and the next operation goes to Step 7;
7. In suspend state, when the status information and timestamp value (if the function is enable) of the transmitting frame is available, the TxDMA controller writes them back to descriptor and then close it by setting DAV=0 of descriptor;
8. In suspend state, application can make TxDMA returns to running state by writing any data to ENET_DMA_TPEN register and clearing the transmit underflow flag. Then the TxDMA controller process goes to Step 1 or Step 2.

Transmit frame format in buffer

According to IEEE 802.3 specification described before, a frame structure is made up of such fields: Preamble, SFD, DA, SA, QTAG (option), LT, DATA, PAD (option), and FCS.

The Preamble and SFD are automatically generated by the MAC, so the application only need store the DA, SA, QTAG (if needed), LT, DATA, DATA, PAD (if needed), FCS (if needed) parts. If the frame needs padding which means PAD and FCS parts are not stored in buffer, then application can configure the MAC to generate the PAD and FCS. If the frame only need FCS which means only FCS part is not stored in buffer, the application can configure the MAC to generate FCS. The DPAD bit and DCRC bit are designed to achieve the generate function of the PAD and FCS field.

Suspend during transmit polling

The DMA controller keeps querying the transmit descriptor after the transmission is started. If either of the following conditions happens, the DMA controller will enter suspend state and the transmit polling will stop. Though the DMA entered suspend state, the descriptor pointer is maintained to the descriptor following of the last closed descriptor.

- The DMA controller fetches a descriptor with DAV=0, then it enters suspend state and stops polling. In this case, the NI bit and TBU bit in ENET_DMA_STAT register are set.

- The MAC FIFO is empty during sending a frame on interface which means an error of underflow occurs. In this case, the AI bit and TU bit in ENET_DMA_STAT register are set. Also the transmit error status will write back to transmit descriptor.

Transmit DMA descriptor with IEEE 1588 timestamp format

When TTSEN bit is set, the timestamp function is enabled. The TxDMA controller writes transmit timestamp status TTMSS and timestamp back to descriptor after the frame transmission complete. The word address in descriptor for writing timestamp is depends on DFM bit in ENET_DMA_BCTL register. If the descriptor format is normal mode (DFM=0), Transmit Descriptor2 and Transmit Descriptor3 are used for timestamp recording and the old values in Transmit Descriptor2 and Transmit Descriptor3 are overwritten. If the descriptor format is enhanced mode (DFM=1), Transmit Descriptor6 and Transmit Descriptor7 are used for timestamp recording and the value in Transmit Descriptor2 and Transmit Descriptor3 are kept.

TxDMA descriptors in normal mode

The normal mode descriptor structure consists of four 32-bit words: Transmit Descriptor0 ~ Transmit Descriptor3**.** The descriptions of Transmit Descriptor0 ~ Transmit Descriptor3 are given below:

Note: When a frame is described by more than one descriptor, only the control bits of the first descriptor are accept by TxDMA controller (except INTC). But the status and timestamp (if enabled) are written back to the last descriptor.

Figure 43-7. Transmit descriptor in normal mode

	31 … 0
Transmit Descriptor 0	Control and status
Transmit Descriptor 1	Transmit buffer 1 / 2 size
Transmit Descriptor 2	Transmit buffer 1 address/Timestamp low
Transmit Descriptor 3	Transmit buffer 2 address or next descriptor address /Timestamp high

- Transmit Descriptor0

31	30	29	28	27	26	25	24	23	22	21	20	19	18	17	16
DAV	INTC	LSG	FSG	DCRC	DPAD	TTSEN	Reserved	CM[1:0]		TERM	TCHM	Reserved		TTMSS	IPHE
rw	rw	rw	rw	rw	rw	rw		rw		rw	rw			rw	rw

15	14	13	12	11	10	9	8	7	6	5	4	3	2	1	0
ES	JT	FRMF	IPPE	LCA	NCA	LCO	ECO	VFRM	COCNT[3:0]				EXD	UFE	DB
rw	rw	rw	rw	rw	rw	rw	rw	rw	rw				rw	rw	rw

Bits	Fields	Descriptions
31	DAV	DAV bit

		The DMA clears this bit either when it completes the frame transmission or the buffer allocated in the descriptor is read completely. This bit of the frame's first descriptor must be set after all subsequent descriptors belonging to the same frame have been set. 0: The descriptor is available for CPU not for DMA 1: The descriptor is available for DMA not for CPU
30	INTC	Interrupt on completion bit Only when the LSG bit is set, this bit is valid. 0: TS bit in ENET_DMA_STAT is not set when frame transmission complete. 1: TS bit in ENET_DMA_STAT is set when frame transmission complete.
29	LSG	Last segment bit This bit shows whether the transmit buffer contains the last segment of the frame. 0: The buffer of descriptor is not stored the last part of frame 1: The buffer of descriptor is stored the last part of frame
28	FSG	First segment bit This bit shows whether the buffer contains the first segment of a frame. 0: The buffer of descriptor is not stored the first block of frame 1: The buffer of descriptor is stored the first block of frame
27	DCRC	Disable CRC bit Only when the FSG bit is set, this bit is valid. 0: Allow MAC to insert CRC at the end of transmitted frame automatically 1: Not Allow MAC to insert CRC at the end of transmitted frame
26	DPAD	Disable adding pad bit Only when the FSG bit is set, this bit is valid. 0: The DMA adds padding byte and CRC to transmitted frame automatically. Only the padding actually acts, the CRC is also appended. And ignore the value of DCRC bit. 1: The MAC does not add padding to a frame automatically
25	TTSEN	Transmit timestamp function enable bit. Only when the FSG bit is set, this bit is valid. 0: Disable transmit timestamp function 1: Enable IEEE 1588 hardware time stamping for the transmit frame, when TMSEN bit in the ENET_PTP_TSCTL register is set.
24	Reserved	Must be kept at reset value.
23:22	CM[1:0]	Checksum mode bits 0x0: Disable checksum insertion function 0x1: Only enable function for IP header checksum calculation and insertion 0x2: Enable IP header checksum and payload checksum calculation and insertion, hardware does not calculate checksum of pseudo-header.

		0x3: Enable IP Header checksum and payload checksum calculation and insertion, hardware calculates checksum of pseudo-header.
21	TERM	Transmit end for ring mode bit This bit is used only in ring mode and has higher priority than TCHM. 0: The current descriptor is not the last descriptor in the table 1: The descriptor table reached its final descriptor. The DMA descriptor pointer returns to the start address of the table.
20	TCHM	The second address chained mode bit This bit is used only in chain mode. When TCHM bit is set, TB2S[12:0] is ignored. 0: The second address in the descriptor is the second buffer address 1:The second address in the descriptor is the next descriptor address
19:18	Reserved	Must be kept at reset value.
17	TTMSS	Transmit timestamp status bit Only when the LSG bit is set, this bit is valid. 0: Timestamp was not captured 1:A timestamp was captured for the described transmit frame and push into Transmit Descriptor2 (or Transmit Descriptor6 if DFM=1) and Transmit Descriptor 3 (or Transmit Descriptor7if DFM=1)
16	IPHE	IP header error bit IP header error occurs when any case of below happen: IPv4 frames: 1) The header length field has a value less than 0x5. 2) The header length field value in transmitting IPv4 frame is mismatch with the number of header bytes. 3) The version field value does not match the length / type field value. IPv6 frames: 1) The main header length is not 40 bytes. 2) The version field value does not match the length / type field value. 0: The MAC transmitter did not detect error in the IP datagram header 1: The MAC transmitter detected an error in the IP datagram header
15	ES	Error summary bit Following bits are logical ORed to generate this bit: IPHE: IP header error JT: Jabber timeout FRMF: Frame flush IPPE: IP payload error LCA: Loss of carrier NCA: No carrier LCO: Late collision ECO: Excessive collision EXD: Excessive deferral

		UFE: Underflow error
14	JT	Jabber timeout bit Only set when the JBD bit is reset. 0: No jabber timeout occurred 1: Jabber timeout of MAC transmitter has occurred
13	FRMF	Frame flushed bit This bit is set to flush the Tx frame by software.
12	IPPE	IP payload error bit The transmitter checks the payload length received in the IPv4 or IPv6 header against the actual number of TCP, UDP or ICMP packet bytes received from the application and issues an error status in case of a mismatch. 0: No IP payload error occurred 1: MAC transmitter detected an error in the TCP, UDP, or ICMPIP datagram payload.
11	LCA	Loss of carrier bit When the interface signal 'CRS' lost one or more cycles and no collision happened during transmitting, the loss of carrier condition occurs. Only in Half-duplex mode this bit is valid. 0: No loss of carrier occurred 1: When the frame is transmitting, loss of carrier occurred
10	NCA	No carrier bit 0: PHY carrier sense signal is active 1: When the frame is transmitting, the carrier sense signal from the PHY was not active
9	LCO	Late collision bit If a collision occurs when 64 bytes (including preamble and SFD) has already transferred, this situation called late collision. 0: No late collision occurred 1: Late collision situation occurred **Note:** This bit is not valid if the UFE bit is set.
8	ECO	Excessive collision bit If the RTD=1 (retry function disable), this bit is set after the first collision. If the RTD=0 (retry function enable), this bit is set when failed 16 successive retry transmitting. When this bit is set, the transmission of current frame is aborted. 0: No excessive collision occurred 1: Excessive collision occurred
7	VFRM	VLAN frame bit 0: The transmitted frame was a normal frame

		1: The transmitted frame was a VLAN-type frame
6:3	COCNT[3:0]	Collision count bits Only when ECO bit is cleared, this bit is valid. Before the frame was transmitted, this 4-bit counter counts the number of collisions that has occurred.
2	EXD	Excessive deferral bit Only when the DFC bit in the ENET_MAC_CFG register is set, this bit is valid. 0: No excessive deferral occurred 1: The transmission has ended because of excessive deferral time is over 3036 bytes
1	UFE	Underflow error bit This bit shows that the TxDMA comes across an empty TxFIFO while transmitting the frame before EOF which is caused by pushing data to TxFIFO late from memory. The transmission process enters the suspend state and sets both the TU (bit 5) and the TS (bit 0) in ENET_DMA_STAT. 0: No underflow error occurred 1: Underflow error occurred and the MAC aborted the frame transmitting
0	DB	Deferred bit This bit shows whether the transmitting frame is deferred because of interface signal CRS is active before MAC transmit frame. Only in Half-duplex mode this bit is valid. 0: No transmission deferred 1:The MAC is deferred before transmission

- Transmit descriptor1

31	30	29	28	27	26	25	24	23	22	21	20	19	18	17	16
Reserved			TB2S[12:0]												
			rw												

15	14	13	12	11	10	9	8	7	6	5	4	3	2	1	0
Reserved			TB1S[12:0]												
			rw												

Bits	Fields	Descriptions
31:29	Reserved	Must be kept at reset value.
28:16	TB2S[12:0]	Transmit buffer 2 size bits The second data buffer byte size. If the THCM bit in the Transmit Descriptor0 is set, this bit is ignored.
15:13	Reserved	Must be kept at reset value.
12:0	TB1S[12:0]	Transmit buffer 1 size bits

The first data buffer byte size. The TxDMA ignores this buffer and uses buffer 2 (for TCHM=0) or the next descriptor (for TCHM=1) when this field is 0.

■ Transmit descriptor2

31	30	29	28	27	26	25	24	23	22	21	20	19	18	17	16
TB1AP / TTSL[31:16]															
rw															

15	14	13	12	11	10	9	8	7	6	5	4	3	2	1	0
TB1AP / TTSL[15:0]															
rw															

Bits	Fields	Descriptions
31:0	TB1AP / TTSL[31:0]	Transmit buffer 1 address pointer / Transmit frame timestamp low 32-bit value bits Before transmitting frame, application must configure these bits for transmit buffer 1 address (TB1AP). When the transmitting frame is complete, these bits can be changed to the timestamp low 32-bit value (TTSL) for transmitting frame if DFM=0. But if DFM=1, these bits will not change and keep the value of buffer address. When these bits stand for buffer 1 address (TB1AP), the alignment is no limitation. When these bits stand for timestamp low 32-bit value, the TTSEN and LSG bit of current descriptor must be set.

■ Transmit descriptor word 3

31	30	29	28	27	26	25	24	23	22	21	20	19	18	17	16
TB2AP / TTSH[31:16]															
rw															

15	14	13	12	11	10	9	8	7	6	5	4	3	2	1	0
TB2AP / TTSH[15:0]															
rw															

Bits	Fields	Descriptions
31:0	TB2AP / TTSH[31:0]	Transmit buffer 2 address pointer (or next descriptor address) / Transmit frame timestamp high 32-bit value bits. Before transmitting frame, application must configure these bits for transmit buffer 2 address (TB2AP) or the next descriptor address which is decided by descriptor type is ring or chain. When the transmitting frame is complete, these bits can be changed to the timestamp high 32-bit value (TTSH) for transmitting frame if DFM=0 and TTSEN =1. But if DFM=1 or TTSEN =0, these bits will not change and keep the old value. When these bits stand for buffer 2 address (TCHM=0), the alignment is no limitation. When these bits stand for the next descriptor address (TCHM=1), these bits must be word-alignment. When these bits stand for timestamp high 32-bit value, the TTSEN and LSG bit of current descriptor must be set.

TxDMA descriptors in enhanced mode

The enhanced mode descriptor structure consists of eight 32-bit words: Transmit Descriptor0 ~ Transmit Descriptor7. The descriptions of Transmit Descriptor0 ~ Transmit Descriptor3. are the same with normal mode descriptor; Transmit Descriptor4 ~ Transmit Descriptor7. are given below:

Note: When a frame is described by more than one descriptor, only the control bits of the first descriptor are accept by DMA controller (except INTC). But the status and timestamp (if enabled) are written back to the last descriptor.

Figure 43-8. Transmit descriptor in enhanced mode

	31 … 0
Transmit Descriptor 0	Control and status
Transmit Descriptor 1	Transmit buffer 1 / 2 size
Transmit Descriptor 2	Transmit buffer 1 address
Transmit Descriptor 3	Transmit buffer 2 address or next descriptor address
Transmit Descriptor 4	Reserved
Transmit Descriptor 5	Reserved
Transmit Descriptor 6	Timestamp low
Transmit Descriptor 7	Timestamp high

- Transmit descriptor4
  All bits reserved.
- Transmit descriptor5
  All bits reserved.
- Transmit descriptor6

31	30	29	28	27	26	25	24	23	22	21	20	19	18	17	16
TTSL[31:16]															
rw															

15	14	13	12	11	10	9	8	7	6	5	4	3	2	1	0
TTSL[15:0]															
rw															

Bits	Fields	Descriptions
31:0	TTSL[31:0]	Transmit frame timestamp low 32-bit value bits When TTSEN =1 and LSG=1, there bits are updated by TxDMA for recording timestamp low 32-bit value of the current transmitting frame.

- Transmit descriptor 7

31	30	29	28	27	26	25	24	23	22	21	20	19	18	17	16

TTSH[31:16]
rw

15	14	13	12	11	10	9	8	7	6	5	4	3	2	1	0
TTSH[15:0]															
rw															

Bits	Fields	Descriptions
31:0	TTSH[31:0]	Transmit frame timestamp high 32-bit value bits When TTSEN =1 and LSG=1, these bits are updated by TxDMA for recording timestamp high 32-bit value of the current transmitting frame.

Reception process of DMA

When a frame is presented on the interface, the MAC starts to receive it. At the same time, the address filter block is running for this received frame. If the received frame fails the address filtering it will be discarded from RxFIFO in MAC and not be forwarded to buffer by RxDMA controller. If the received frame passes the address filtering, it will be forwarded to buffer when the available time comes. If the RxDMA controller is configured in Cut-Through mode, the available time means the byte number of the received frame is equal or greater than the configured threshold. If the RxDMA controller is configured in Store-and-Forward mode, the available time means the complete frame is stored in RxFIFO. During receiving frame, if any one of the below cases occurs the MAC can discard the received frame data in RxFIFO and the RxDMA controller will not forward these data:

- The received frame bytes is less than 64.
- Collision occurred during frame receiving.
- The premature termination for the receiving frame.

When the available time comes, the RxDMA controller starts transfer frame data from RxFIFO to the receive buffer. If the SOF is included in current receive buffer, the FDES bit in Receive Descriptor0 is set when the RxDMA controller writing receive frame status to indicate this descriptor is used for storing the first part of the frame. If the EOF is included in current receive buffer, the LDES bit in Receive Descriptor0 is set when RxDMA controller writing receive frame status to indicate this descriptor is used for storing the last part of the frame. Often when the buffer size is larger than received frame, the FDES and LDES bit are set in the same descriptor. When the EOF is transferred to buffer or the receive buffer space is exhausted, the RxDMA controller fetches the next receive descriptor and closes previous descriptor by writing Receive Descriptor0 with DAV=0. If the LDES bit is set, the other status are also be updated and the RS bit in ENET_DMA_STAT register will be set (immediately when DINTC=0 or delayed when DINTC=1). If the DAV bit of the next descriptor is set, the RxDMA controller repeats above operation when received a new frame. If the DAV bit of the next descriptor is reset, the RxDMA controller enters suspend state and sets RBU bit in ENET_DMA_STAT register. The pointer value of descriptor address table is retained and be used for the starting descriptor address after exiting suspend state.

Reception management of DMA

The receiving process of the RxDMA controller is described detailed as below:

1. Applications initialize the receive descriptors with the DAV bit in the Receive Descriptor0 is set;
2. Setting the SRE bit in ENET_DMA_CTL register to make RxDMA controller entering running state. In running state, the RxDMA controller continually fetching the receive descriptors from descriptor table whose starting address is configured in ENET_DMA_RDTADDR register by application. If the DAV bit of the fetched receive descriptor is set, then this descriptor is used for receiving frame. But if the DAV bit is reset which means this receive descriptor cannot be used by RxDMA, the RxDMA controller will enter suspend state and operation goes to Step 9;
3. From the valid receive descriptor (DAV=1), the RxDMA controller marks the receiving control bit and data buffer address;
4. Processing the received frames and transfer data to the receive buffer from the RxFIFO;
5. If all frame data has completely transferred or the buffer is full, the RxDMA controller fetches the next descriptor from receive descriptor table;
6. If the current receiving frame transfer is complete, the operation of RxDMA goes to Step7. But if not complete, two conditions may occur:
   - The next descriptor's DAV bit is reset. The RxDMA controller sets descriptor error bit DERR in Receive Descriptor0 if flushing function is enabled. The RxDMA controller closes current descriptor by resetting DAV bit and sets the LSG bit (if flushing is enabled) or resets the LSG bit (if flushing is disabled). Then the operation goes to Step 8.
   - The next descriptor's DAV bit is set. The RxDMA controller closes current descriptor by resetting DAV bit and operation goes to Step 4.
7. If IEEE 1588 time stamping function is enabled, the RxDMA controller writes the time stamp value (if receiving frame meets the configured time stamping condition) to the current descriptor's Receive Descriptor2 and Receive Descriptor3 if DFM=0 or Receive Descriptor6 and Receive Descriptor7 if DFM=1. At the same time (writing timestamp value) the RxDMA controller also writes the received frame's status word to the Receive Descriptor0 with the DAV bit cleared and the LSG bit set;
8. The latest descriptor is fetched by RxDMA controller. If the fetched descriptor bit 31 (DAV) is set, the RxDMA controller operation goes to Step 4. If the fetched descriptor bit 31 is reset, the RxDMA controller enters the suspend state and sets the RBU bit in register ENET_DMA_STAT. If flushing function is enabled, the RxDMA controller will flush the received frame data in the RxFIFO before entering suspend state;
9. In suspended state, there are two conditions to exit. The first is writing data in the ENET_DMA_RPEN register by application. The second is when a new received frame is available which means the byte number of receiving frame is greater than threshold in Cut-Through mode or when the whole frame is received in Store-and-Forward mode.

Once exiting suspend mode, the RxDMA controller fetches the next descriptor and the following operation goes to Step 2.

Receive descriptor fetching regulation

Descriptor fetching occurs if any one or more of the following conditions are met:

- The time SRE bit is configured from 0 to 1 which makes the RxDMA controller entering running state.
- The total buffer size (buffer 1 for chain mode or buffer 1 plus buffer 2 for ring mode) of the current descriptor cannot hold the current receiving frame. In other word, the last byte stored in buffer space is not the EOF byte.
- After a complete frame is transferred to buffer and before current descriptor is closed.
- In suspend state, the MAC received a new frame.
- Writing any value to receive poll enable register ENET_DMA_RPEN.

Processing after a new frame received in suspend state

When a new frame is available (see available definition in the previous paragraph), the RxDMA controller fetches the descriptor. If the DAV bit in Receive Descriptor0 is set, the RxDMA controller exits suspend state and returns to running state for frame reception. But if the DAV bit in Receive Descriptor0 is reset, application can choose whether these received frame data in RxFIFO are flushed or not by configuring DAFRF bit in ENET_DMA_CTL register. If DAFRF=0, the RxDMA controller discards these received frame data and makes the missed frame counter (MSFC) increase one. If DAFRF=1, these frame data are will not be flushed and MSFC counter will not increase until the RxFIFO is full. If the DAV bit is reset in fetched descriptor, the RBU bit in ENET_DMA_STAT register will be set and the RxDMA controller will be still in suspend state.

Receive DMA descriptor with IEEE 1588 timestamp format

If the IEEE 1588 function enabled, the MAC writes the timestamp value to Receive Descriptor2 and Receive Descriptor3 (DFM=0) or Receive Descriptor6 and Receive Descriptor7 (DFM=1) after a frame with timestamp reception complete and before the RxDMA controller clears the DAV bit.

RxDMA descriptors in normal mode

In normal descriptor mode, the descriptor structure consists of four 32-bit words: Receive Descriptor0 ~ Receive Descriptor3 The detailed description of Receive Descriptor0 ~ Receive Descriptor3 are given below.

Figure 43-9. Receive descriptor in normal mode

	31 … 0
Receive Descriptor 0	Control and status
Receive Descriptor 1	Receive buffer 1 / 2 size and control
Receive Descriptor 2	Receive buffer 1 address/Timestamp low
Receive Descriptor 3	Receive buffer 2 address or next descriptor address /Timestamp high

■ Receive descriptor 0

31	30	29	28	27	26	25	24	23	22	21	20	19	18	17	16
DAV	DAFF	FRML[13:0]													
rw	rw	rw													

15	14	13	12	11	10	9	8	7	6	5	4	3	2	1	0
ERRS	DERR	SAFF	LERR	OERR	VTAG	FDES	LDES	IPHERR / TSV	LCO	FRMT	RWDT	RERR	DBERR	CERR	PCERR / EXSV
rw	rw	rw	rw	rw	rw	rw	rw	rw	rw	rw	rw	rw	rw	rw	rw

Bits	Fields	Descriptions
31	DAV	Descriptor available bit This bit shows the DMA controller can use this descriptor. The DMA clears this bit either when it completes the frame reception or when the buffers in this descriptor are full. 0: The descriptor is owned by the CPU 1: The descriptor is owned by the DMA
30	DAFF	Destination address filter fail bit 0: A frame passed the destination address filter 1: A frame failed the destination address filter
29:16	FRML[13:0]	Frame length bits These bits show the byte length of the received frame that was transferred to the buffer (including CRC when received frame is not a type frame. If received frame is a type frame, including CRC or not is controlled by TFCD bit in ENET_MAC_CFG). Only when the bit LDES=1 and DERR=0, these bits are valid. If LDES=0 and ERRS=0, these bits indicate the accumulated number of bytes that have been transferred for the current frame. **Note:** The value of frame length is 0 means that for some reason (such as FIFO overflow or dynamically modify the filter value in the receiving process, resulting did not pass the filter, etc), frame data is not written to FIFO completely.
15	ERRS	Error summary bit Only when the LDES bit is set, this bit is valid. This bit is logical ORed by the following bits when DFM is equal to 0: DERR: Descriptor error

		OERR: Overflow error LCO: Late collision RWDT: Watchdog timeout RERR: Receive error CERR: CRC error IPHERR = 0, FRMT = 1 and PCERR = 1: payload checksum error IPHERR = 1, FRMT = 1 and PCERR = 0: header checksum error IPHERR = 1, FRMT = 1 and PCERR = 1: both header and payload checksum errorsThis bit is logical ORed by the following bits when DFM is equal to 1: IPPLDERR: IP frame payload error IPHERR: IP frame header error DERR: Descriptor error OERR: Overflow error LCO: Late collision RWDT: Watchdog timeout RERR: Receive error CERR: CRC error
14	DERR	Descriptor error bit Only when the LDES bit is set, this bit is valid. When the current buffer cannot hold current received frame and the next descriptor's DAV bit is reset, the descriptor error occurs. 0: No descriptor error occurred 1: Descriptor error occurred
13	SAFF	SA filtering fail bit 0: No source address filter fail occurred 1: A received frame failed the SA filter
12	LERR	Length error bit Only when the FRMT bit is reset, this bit is valid. This bit shows whether the length field in received is mismatch the actual frame length. 0: No length error occurred 1: Length error occurred
11	OERR	Overflow error bit When RxFIFO is overflow and the frame data has been partly forwarded to descriptor buffer, the overflow error bit sets. 0: No overflow error occurred 1: RxFIFO overflowed and frame data is not valid
10	VTAG	VLAN tag bit 0: Received frame is not a tag frame 1: Received frame is a tag frame

9	FDES	First descriptor bit This bit shows whether current descriptor contains the SOF of the received frame. 0: The current descriptor does not store the SOF of the received frame 1: The current descriptor buffer saves the SOF of the received frame
8	LDES	Last descriptor bit This bit shows whether current descriptor contains the EOF of the received frame. 0: The current descriptor buffer does not store EOF of the received frame 1: The current descriptor buffer saves the EOF of the received frame
7	IPHERR / TSV	IP frame header error bit / Timestamp valid bit When DFM=0, bit 7, 5 and 0 indicate some special cases refer to the error status table. When DFM=1, this bit indicates the timestamp value is taken and write to the Receive Descriptor6 and Receive Descriptor7. This bit is valid only when LDES is set.
6	LCO	Late collision bit This bit shows whether a collision occurs after 64 bytes have been received. This bit only valid in Half-duplex mode. 0: No late collision occurred 1: Late collision has occurred
5	FRMT	Frame type bit When DFM=0, bit 7, 5 and 0 shows some special cases refer to the error status table. When DFM=1, this bit shows the received frame is an Ethernet type frame or a tagged frame. If the received frame is runt frame, this bit is not valid for application. 0: The received frame is an IEEE802.3 frame without tagged. 1: The received frame is an Ethernet-type frame (the length / type field is greater than or equal to 0x0600, or this is a tagged frame)
4	RWDT	Receive watchdog timeout bit When WDD=0, this bit shows a frame with more than 2048 bytes was detected. When WDD=1, this bit shows a frame with more than 16384 bytes was detected. 0: No receive watchdog timeout occurred 1: Watchdog timer overflowed during receiving and current frame is only a part of frame.
3	RERR	Receive error bit This bit shows whether the interface signal RX_ER asserted when RX_DV signal is active during frame receiving process. 0: No receive error occurred 1:Receive error occurred
2	DBERR	Dribble bit error bit

		This bit shows whether there is an incomplete byte (odd cycles during reception) received. Only when in MII interface mode, this bit is valid. 0: No dribble bit error occurred 1: Dribble bit error occurred
1	CERR	CRC error bit This bit shows whether FCS field in received frame is mismatch with the calculation result of the hardware. Only when LDES bit is set, this bit is valid. 0: No CRC error occurred 1:A CRC error occurred
0	PCERR / EXSV	Payload checksum error bit / Extended status valid bit When DFM=0, bit 7, 5 and 0 indicate some special cases refer to the error status table. When DFM=1, this bit indicates the descriptor Receive Descriptor4is valid for application. This bit only valid when LDES is set. 0: Receive Descriptor4is not valid for application 1: Receive Descriptor4is valid for application

Table 43-7. Error status decoding in Receive Descriptor0, only used for normal descriptor (DFM=0) shows the combination meaning for bit 7, 5, and 0 in Receive Descriptor0:

Table 43-7. Error status decoding in Receive Descriptor0, only used for normal descriptor (DFM=0)

Bit 7: IPHERR	Bit 5: FRMT	Bit 0: PCERR	Frame status
0	0	0	IEEE 802.3 normal frame (Length field value is less than 0x0600 and not tagged)
0	0	1	IPv4 or IPv6 frame, no header checksum error, payload checksum is bypassed because of unsupported payload type
0	1	0	IPv4 or IPv6 frame, checksum checking pass
0	1	1	IPv4 or IPv6 frame, payload checksum error. This error may case by following condition: 1) Calculated checksum value mismatch the checksum field 2) byte number of received payload mismatch length field
1	0	0	Reserved
1	0	1	A type (length / type field equal or greater than 0x0600) or tagged frame but neither IPv4 nor IPv6. Offload check engine is bypassed.
1	1	0	IPv4 or IPv6 frame, but a header checksum error detected This error may case by following condition: 1) Type value inconsistent with version value

			2) Calculated header checksum mismatch the header checksum field 3) Expected IP header bytes is not received enough
1	1	1	IPv4 or IPv6 frame, both header and payload checksum detected errors

■ Receive descriptor 1

31	30	29	28	27	26	25	24	23	22	21	20	19	18	17	16
DINTC	Reserved		RB2S[12:0]												
rw									rw						

15	14	13	12	11	10	9	8	7	6	5	4	3	2	1	0
RERM	RCHM	Reserved	RB1S[12:0]												
rw	rw								rw						

Bits	Fields	Descriptions
31	DINTC	Disable interrupt on completion bit 0: RS bit in ENET_DMA_STAT register will immediately set after receiving the completed, then if enabled the corresponding interrupt, the interrupt will trigger. 1: RS bit in ENET_DMA_STAT register will is not immediately set after receiving the completed, but will set after a configurable delay time.
30:29	Reserved	Must be kept at reset value.
28:16	RB2S[12:0]	Receive buffer 2 size bits The second buffer size in bytes. The buffer size must be a multiple of 4. This field is ignored if RCHM is set.
15	RERM	Receive end of ring mode bit This bit indicates the final descriptor in table is arrived and the next descriptor address is automatically set to the configured start descriptor address. 0: Current descriptor is not the last descriptor in table 1: Current descriptor is the last descriptor in table
14	RCHM	Receive chained mode for second address bit 0: The second address points to the second buffer address. 1: The second address points to the next descriptor address. RB2S[12:0] is ignored. **Note:** If the RERM=1, the next descriptor returns to base address even this bit is set to 1.
13	Reserved	Must be kept at reset value.
12:0	RB1S[12:0]	Receive buffer 1 size bits The first buffer size in bytes. The buffer size must be a multiple of 4. If this field is 0, the RxDMA controller ignores this buffer and uses buffer 2 (RCHM=0) or the next descriptor (RCHM=1).

■ Receive descriptor 2

31	30	29	28	27	26	25	24	23	22	21	20	19	18	17	16
RB1AP / RTSL[31:16]															
rw															

15	14	13	12	11	10	9	8	7	6	5	4	3	2	1	0
RB1AP / RTSL[15:0]															
rw															

Bits	Fields	Descriptions
31:0	RB1AP / RTSL[31:0]	Receive buffer 1 address pointer / Receive frame timestamp low 32-bit These bits are designed for two different functions: buffer address pointer (RB1AP) or timestamp low 32-bit value (RTSL). RB1AP: Before fetching this descriptor by RxDMA controller, these bits are configured to the buffer 1 address by application. This buffer 1 address pointer is used for RxDMA controller to store the received frame if RB1S is not 0. The buffer address alignment has no limitation. RTSL: When timestamp function is enabled and LDES is set, these bits will be changed to timestamp low 32-bit value by RxDMA controller if received frame passed the filter and satisfied the snapshot condition. If the received frame does not meet the snapshoot condition, these bits will keep RB1AP value.

■ Receive descriptor 3

31	30	29	28	27	26	25	24	23	22	21	20	19	18	17	16
RB2AP / RTSH[31:16]															
rw															

15	14	13	12	11	10	9	8	7	6	5	4	3	2	1	0
RB2AP / RTSH[15:0]															
rw															

Bits	Fields	Descriptions
31:0	RB2AP / RTSH[31:0]	Receive buffer 2 address pointer (next descriptor address) / Receive frame timestamp high 32-bit value bits These bits are designed for two different functions: buffer address pointer or next descriptor address (RB1AP) or timestamp high 32-bit value (RTSH). RB2AP: Before fetching this descriptor by RxDMA controller, these bits are configured to the buffer 2 address (RCHM=0) or the next descriptor address (RCHM=1) by application. This buffer 2 address pointer is used for RxDMA controller to store the received frame if RB1S is not 0 when RCHM=0. If RCHM=1 and RERM=0, this address pointer is used for fetching the next descriptor. If RCHM=1 and RERM=1, these bits are ignored. When this address is used for next descriptor address, the word alignment is needed. The other conditions have no limitation for these bits.

RTSH: When timestamp function is enabled and LDES is set, these bits will be changed to timestamp high 32-bit value by RxDMA controller if received frame passed the filter and satisfied the snapshoot condition. If the received frame does not meet the snapshot condition, these bits will keep RB2AP value.

RxDMA descriptors in enhanced mode

In enhanced descriptor mode, the descriptor structure consists of eight 32-bit words: Receive Descriptor0 ~ Receive Descriptor7. The description of Receive Descriptor0 ~ Receive Descriptor3 are the same with descriptors in normal mode. The description of Receive Descriptor4 ~ Receive Descriptor7 are given below.

Figure 43-10. Receive descriptor in enhanced mode

	31 … 0
Recive Descriptor 0	Control and status
Recive Descriptor 1	Recive buffer 1 / 2 size and control
Recive Descriptor 2	Recive buffer 1 address
Recive Descriptor 3	Recive buffer 2 address or next descriptor address
Recive Descriptor 4	Extended Status
Recive Descriptor 5	Reserved
Recive Descriptor 6	Timestamp low
Recive Descriptor 7	Timestamp high

■ Receive descriptor 4

31	30	29	28	27	26	25	24	23	22	21	20	19	18	17	16
Reserved															

15	14	13	12	11	10	9	8	7	6	5	4	3	2	1	0
Reserved		PTPVF	PTPOEF	PTPMT[3:0]				IPF6	IPF4	IPCKSB	IPPLDERR	IPHERR	IPPLDT[2:0]		
		rw	rw	rw				Rw	rw	rw	rw	rw	rw		

Bits	Fields	Descriptions
31:14	Reserved	Must be kept at reset value.
13	PTPVF	PTP version format bit 0: Version 1 format 1: Version 2 format
12	PTPOEF	PTP on Ethernet frame bit 0: Received PTP frame is a IP-UDP frame if PTPMT is not zero 1: Received PTP frame is a IEEE802.3 Ethernet frame

11:8	PTPMT[3:0]	PTP message type bits PTP message type is decoded to following number: 0x0: Not PTP frame received 0x1: SYNC 0x2: FOLLOW_UP 0x3: DELAY_REQ 0x4: DELAY_RESP 0x5: For peer-to-peer transparent clock: PDELAY_REQ For ordinary or boundary clock: ANNOUNCE 0x6: For peer-to-peer transparent clock: PDELAY_RESP For ordinary or boundary clock: MANAGEMENT 0x7: For peer-to-peer transparent clock: PDELAY_RESP_FOLLOW_UP For ordinary or boundary clock: SIGNALING
7	IPF6	IP frame in version 6 bit 0: Received frame is not a IPv6 frame 1: Received frame is a IPv6 frame
6	IPF4	IP frame in version 4 bit 0: Received frame is not a IPv4 frame 1: Received frame is a IPv4 frame
5	IPCKSB	IP frame checksum bypassed bit This bit is only valid when received frame is a IPv4 or IPv6 frame. 0: Received frame checksum checking function is not bypassed 1: Received frame checksum checking function is bypassed
4	IPPLDERR	IP frame payload error bit This bit can be set by any of below cases: 1) the calculated checksum by hardware mismatch with the TCP, UDP or ICMP checksum field in frame. 2) payload length value in IP header mismatch the received payload length. 0: Payload error not occurred in received frame 1: Payload error occurred in received frame
3	IPHERR	IP frame header error bit This bit can be set by any of below cases: 1) the calculated checksum by hardware mismatch with the IP header checksum field value. 2) Type field in IP frame is not consistent with version field (e.g. ‘type’ field value is 0x0800 but ‘version’ field value is not 0x4, ‘type’ field value is 0x86dd but ‘version’ field value is not 0x6). 0: IP header error not occurred 1: IP header error occurred
2:0	IPPLDT[2:0]	IP frame payload type bits These bits are valid only when IPFCO=1, IPHERR=0 and LDES=1. 0x0: Unsupported payload type or IP payload bypassed 0x1: payload type is UDP 0x2: payload type is TCP

0x3: payload type is ICMP

0x4~0x7: Reserved

- Receive descriptor 5

  All bits reserved

- Receive descriptor 6

31	30	29	28	27	26	25	24	23	22	21	20	19	18	17	16
RTSL[31:16]															
rw															

15	14	13	12	11	10	9	8	7	6	5	4	3	2	1	0
RTSL[15:0]															
rw															

Bits	Fields	Descriptions
31:0	RTSL[31:0]	Receive frame timestamp low 32-bit value When timestamp function is enabled and LDES is set, these bits will be written to timestamp low 32-bit value by RxDMA controller if received frame passed the filter and satisfied the snapshoot condition.

- Receive descriptor 7

31	30	29	28	27	26	25	24	23	22	21	20	19	18	17	16
RTSH[31:16]															
rw															

15	14	13	12	11	10	9	8	7	6	5	4	3	2	1	0
RTSH[15:0]															
rw															

Bits	Fields	Descriptions
31:0	RTSH[31:0]	Receive frame timestamp high 32-bit value When timestamp function is enabled and LDES is set, these bits will be written to timestamp high 32-bit value by RxDMA controller if received frame passed the filter and satisfied the snapshoot condition.

43.3.4. MAC statistics counters: MSC

For knowing the statistics situation of transmitting and receiving frames, there is a group of counters designed for gathering statistics data. These MAC counters are called statistics counters (MSC).In Section '***Register definition***', there is a detailed description of the function of these registers.

- When the transmit frame does not appear the situations, such as frame underflow, no carrier, carrier lost, excessive deferral, late collision，excessive collision and jabber timeout, it can be called "good frame". MSC transmit counters will automatically update.

- When the receiving frame does not appear the situations, such as alignment error, CRC mismatch , runt frame, length error, range error and error signal valid on pin MII_RX_ER, it can be called 'good frame' and MSC reception counters will automatically update. Among them, CRC mismatch indicates that calculated CRC value is different from FSC field value, runt frame indicates that the frame length is shorter than 64 bytes, length error indicates that the length field value is different from the actual received data bytes, range error indicates that the length field value is larger than maximum size of defined in IEEE802.3 (1518 for untagged frame and 1522 for VLAN tagged frame).

Note: Only when the discarded frame is a short frame whose length is less than 6 bytes (no complete receives the DA), MSC reception counter is updated.

43.3.5. Wake up management: WUM

Ethernet (ENET) module supports two wakeup methods from Deep-sleep mode. The one is remote wakeup frame and the other is Magic Packet wakeup frame. For reduce power consuming, the host system and Ethernet can be powered down and thus the circuit driven by HCLK or transmit clock is stop working. But the circuit driven by receive clock will continues working for listening wakeup frame. If application sets the PWD bit in ENET_MAC_WUM register, the Ethernet enters into power-down state. In power-down state, MAC ignores all the frame data on the interface until the power-down state is exited. For exiting power-down state, application can choose one of or both of the two methods mentioned above. Setting WFEN bit in ENET_MAC_WUM register can make Ethernet wakeup if a remote wakeup frame received and setting MPE bit in ENET_MAC_WUM register can make Ethernet wakeup if a Magic Packet frame is received. When any type of wakeup frame is present on interface and corresponding wakeup function is enabled, Ethernet will generate a wakeup interrupt and exit power-down state at once.

Remote wakeup frame detection

Setting WFEN bit in ENET_MAC_WUM register can enable remote wakeup detection. When the MAC is in power-down state and remote wakeup function enable bit is set, MAC wakeup frame filter is active. If the received frame passes the address filter and filter CRC-16 matches the incoming examined pattern, then MAC identified the received wakeup frame, and then MAC returns to normal working state. Even if the length of the wakeup frame exceeds 512 bytes, as long as the frame has a correct CRC value, it is still considered to be effective. After received the remote wakeup frame, the WUFR bit in ENET_MAC_WUM register will be set. If remote wakeup interrupt is not masked, then a WUM interrupt is generated.

Magic packet detection

Another wakeup method is detecting Magic Packet frame (see 'Magic Packet Technology', Advanced Micro Devices). A Magic Packet frame is a special frame with formed packet solely intended for wakeup purposes. This packet can be received, analyzed and recognized by the Ethernet block and used to trigger a wakeup event. Setting MPE bit in ENET_MAC_WUM

register can enable this function. This type of frame's format is as follows: starts by 6 continuous bytes of the value 0xFF (0xFFFF FFFF FFFF) in anywhere of the frame behind the destination and source address field, then there are 16 duplicate MAC addresses without any interruption and pause. If there is any discontinuity between repeating it 16 times, MAC needs to re-detect 0xFFFF FFFF FFFF in the receive frame. WUM module continuously monitors each frame received. When a Magic Packet frame passing the address filter, MAC will detect its format with Magic Packet format, once the format is matched the WUM will make MAC wakeup from power down state. Then the MAC wakes up from power-down state after receiving a Magic Packet frame. Module also accepts multicast frames as Magic Packet frame.

Example: An example of a Magic Packet with station address 0xAABB CCDD EEFF is the following (MISC indicates miscellaneous additional data bytes in the packet):

<DESTINATION><SOURCE><MISC>

…….. FF FF FF FF FF FF

AABB CCDD EEFF AABB CCDD EEFF AABB CCDD EEFF AABB CCDD EEFF

AABB CCDD EEFF AABB CCDD EEFF AABB CCDD EEFF AABB CCDD EEFF

AABB CCDD EEFF AABB CCDD EEFF AABB CCDD EEFF AABB CCDD EEFF

AABB CCDD EEFF AABB CCDD EEFF AABB CCDD EEFF AABB CCDD EEFF

<MISC><FCS>

Upon detecting a Magic Packet, the MPKR bit in ENET_MAC_WUM register will be set. If the Magic Packet interrupt is enabled, the corresponding interrupt will generate.

Precautions during system power-down state

When the MCU is in Deep-sleep mode, if external interrupt line 19 is enabled, Ethernet WUM module can still detecting frames. Because the MAC in power-down state needs detecting Magic Packet or remote wakeup frame, the REN bit in ENET_MAC_CFG register must be maintained set. The transmit function should be turned disable during the power-down state by clearing the TEN bit in the ENET_MAC_CFG register. Moreover, the Ethernet DMA block should be disabled during the power-down state, because it is not necessary that the Magic Packet or remote wakeup frame is forwarded to the application. Application can disable the Ethernet DMA block by clearing the STE bit and the SRE bit (for the TxDMA and the RxDMA, respectively in the ENET_DMA_CTL register.

Follow steps are recommended for application to enter and exit power-down state:

1. Wait the current sending frame completes and then reset the TxDMA block by clearing STE bit in ENET_DMA_CTL register;
2. Clear the TEN and REN bit in ENET_MAC_CFG register to disable the MAC's transmit and receive function;
3. Check the RS bit in ENET_DMA_STAT register, waiting receive DMA read out all the

frames in the receive FIFO and then close RxDMA;

4. Configure and enable the external interrupt line 19, so that it can generate an interrupt or event. If EXTI line 19 is configured to generate an interrupt, application still needs to modify ENET_WKUP_IRQ interrupt handling procedures to clear the pending bit of the EXTI line 19;
5. Set the MPEN or WFEN (or both) bit in ENET_MAC_WUM register to enable Magic Packet or Remote Wakeup frame (or both) detection;
6. Setting PWD bit in ENET_MAC_WUM register to enter power-down state;
7. Setting REN bit in ENET_MAC_CFG register to make MAC's receive function work;
8. Make MCU enter Deep-sleep mode;
9. After received a wakeup type frame, the Ethernet module exits the power-down state;
10. Reading the ENET_MAC_WUM register to clear the power management event flags. Enable MAC's transmit function and enable TxDMA and RxDMA;
11. Initialize the MCU system clock: enable HXTAL and configure the RCU unit.

Remote wakeup frame filter register

Wakeup frame filter register is made up of eight different registers but shared the same register offset address. So the inner pointer points the next filter register when the filter register address is accessed by writing or reading. Whatever operation, write or read, it is strongly recommended to operate eight times sequentially. This means continuously write 8 times will configure the filter registers and continuously read 8 times will get the values of filter registers.

Figure 43-11. Wakeup frame filter register

Wakeup Frame Filter Register 0	Filter 0 Byte Mask							
Wakeup Frame Filter Register 1	Filter 1 Byte Mask							
Wakeup Frame Filter Register 2	Filter 2 Byte Mask							
Wakeup Frame Filter Register 3	Filter 3 Byte Mask							
Wakeup Frame Filter Register 4	Reserve	Filter 3 Command	Reserve	Filter 2 Command	Reserve	Filter 1 Command	Reserve	Filter 0 Command
Wakeup Frame Filter Register 5	Filter 3 Offset		Filter 2 Offset		Filter 1 Offset		Filter 0 Offset	
Wakeup Frame Filter Register 6	Filter 1 CRC - 16				Filter 0 CRC - 16			
Wakeup Frame Filter Register 7	Filter 3 CRC - 16				Filter 2 CRC - 16			

- Filter n Byte mask

This register field defines using which bytes of the frame to determine the received frame is

wakeup frame or not by filter n (n=0, 1, 2, 3). Bit 31 must be set to 0. Bit 30 to bit 0 are valid byte mask. If bit m (m means byte number) is set, the filter n offset + m of the receiving frame is calculated by the CRC unit, conversely, filter n offset + m is ignored.

- Filter n command

This four bits command controls the operation of the filter n. The bit 3 of the field is address type selection bit. If this bit is 1, the detection only detects a multicast frame and if this bit is 0, the detection only detects a unicast frame. Bit 2 and bit 1 must be set to 0. Bit 0 is the filter switch bit. Setting it to 1 means enable and 0 means disable.

- Filter n offset

It is used in conjunction with filter n byte mask field. This register specifies offset (within the frame) of the first byte which the filter n uses to check. The minimum allowable value is 12, it represents the byte 13 in the frame (offset value 0 indicates the first byte of the frame).

- Filter n CRC-16

This register field contains the filter comparing CRC-16 code which is used for comparing the calculated CRC-16 from frame data.

43.3.6. Precision time protocol: PTP

The majority of protocols are implemented by the UDP layer application software. The PTP module of the MAC is mainly to recording the transmitting and receiving PTP packets' precision time and returning it to application.

Specific details about the precise time protocol (PTP) please see the document "IEEE Standard 1588™".

Reference clock source

System reference time in Ethernet is maintained by a 64-bit register whose high 32-bit indicates 'second' time and low 32-bit indicates 'subsecond', this is defined in IEEE 1588 specification.

The input PTP reference clock is used to drive the system reference time (also called system time for short) and capture timestamp value for PTP frame. The frequency of this reference clock must be configured no less than the resolution of timestamp counter. The synchronization accuracy between the master node and slave node is around 0.1us.

Synchronization accuracy

The accuracy of time synchronization depends on the following factors:

- PTP reference clock input period.
- Characteristics of the oscillator (drift).
- Frequency of the synchronization procedure.

System time calibration

PTP input reference clock is used to update 64-bit PTP system time. The PTP system time is used as the source to record transmission / reception frame's timestamp. The system time initialization and calibration support two methods: coarse method and fine method. The purpose of calibration is to correct the frequency offset.

If the coarse correction method is selected, application can configure PTP timestamp update register (ENET_PTP_TSUH and ENET_PTP_TSUL) for system time initialization or correction. If TMSSTI bit is set, PTP timestamp update register is used for initialization and if TMSSTU bit is set, PTP timestamp update register is used for adjust system time by adding or subtracting.

If fine correction method is selected, operation is different. The fine correction method corrects system time not in a single clock cycle. The fine correction frequency can be configured by application to make slave clock frequency smoothly adapt master clock without unpredictability large jitter.

This method is referred to the value of ENET_PTP_TSADDEND added to the accumulator in each HCLK cycle. PTP module will produce a pulse to increase the value of ENET_PTP_TSL register when the accumulator overflowed. The increased value when this pulse occurs is in ENET_PTP_SSINC register.

Figure 43-12. System time update using the fine correction method shows the fine correction algorithm process:

Figure 43-12. System time update using the fine correction method

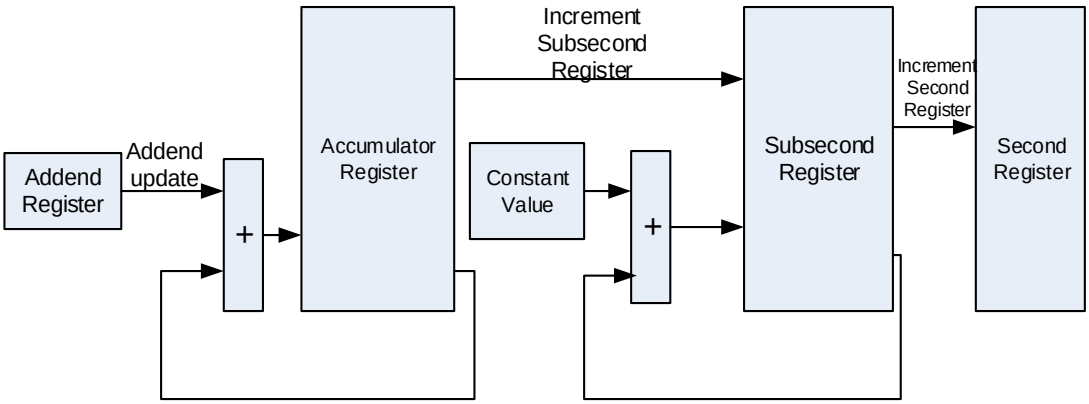

The following concrete example is used to descript the fine correction method how to update the system time:

Assuming the accuracy of the system time update circuit required to achieve 25ns, which means the frequency of update is 40MHz. If the reference clock of HCLK is 72MHz, the frequency ratio is calculated as 72 / 40, result is 1.8. Hence, the addend (TMSA bit in ENET_PTP_TSADDEND register) value to be set is 2^{32} / 1.8, which is equal to 0x8E38 E38E. If the reference clock frequency drifts lower, for example, down to 68MHz, the frequency ratio

changes to 68 / 40 = 1.7, the value to be set in the addend register is 2^{32} / 1.7 = 0x9696 9697. If the reference clock drift higher, for example, up to 76MHz, the value should to be set in the ENET_PTP_TSADDEND register is 2^{32} / 1.9 = 0x86BC A1AF. Initially, the slave clock frequency is set to Clock Addend Value (0) in the addend register. This value is calculated as above. In addition to configuring the addend counter, application also needs to set subsecond increment register to ensure to achieve the precision of 25ns. The value of the register is to update values of timestamp low 32-bit register after accumulator register overflow. Because the STMSS[30:0] bits in the ENET_PTP_TSL register represents the subsecond value of system time, the precision is 10^9ns / 2^{31}=0.46ns. So in order to make the system time accuracy to 25ns, subsecond increment register value should be set to 25 / 0.46 = 0d54.

Note: The algorithm described below based on constant delay transferred between master and slave devices (Master-to-Slave-Delay). Synchronous frequency ratio will be confirmed by the algorithm after a few Sync cycles.

Algorithm is as follows:

- Define the master sends a SYNC message to slave time: MSYNCT (n).
  Define the slave local time: SLOCALT (n).
  Define the master local time: MLOCALT (n).
  Calculation: MLOCALT (n) = MSYNCT (n) + Master-to-Slave-Delay (n).
- Define the master clock count number between two SYNC message sent: MCLOCKC(n).
  Calculation: MCLOCKC (n) = MLOCALT (n) – MLOCALT (n-1).
  Define the slave clock count number between two received SYNC messages: SCLOCKC (n).
  Calculation: SCLOCKC (n) = SLOCALT (n) - SLOCALT (n-1).
- Define the difference between these two count numbers: DIFFCC (n).
  Calculation: DIFFCC (n) = MCLOCKC (n) - SCLOCKC (n).
- Define the slave clock frequency-adjusting factor: SCFAF (n).
  Calculation: SCFAF (n) = (MCLOCKC (n) + DIFFCC (n)) / SCLOCKC (n).
- Define the Clock Addend Value for addend register: Clock Addend Value (n).
  Clock Addend Value (n) = SCFAF (n) * Clock Addend Value (n-1).

Note: During the actual operation, application may need more than once SYNC message between master and slave to lock.

System time initialization procedure

Setting TMSEN bit in ENET_PTP_TSCTL register to 1, timestamp function is enabled. Each time after this bit is set from reset, application must initialize the timestamp counter at first. Initialization steps as follow:

1. Setting TMSTIM in the ENET_MAC_INTMSK register to mask the timestamp trigger interrupt;
2. Setting TMSEN in the ENET_PTP_TSCTL register to enable timestamp function;

3. Configure the subsecond increment register according to the PTP clock frequency precision;
4. If application hopes to use fine correction method, configure the timestamp addend register and set TMSARU in the ENET_PTP_TSCTL register to 1. If application hopes to use coarse correction method, please jump directly to step 7 and step 4-6 can be ignored;
5. Poll the TMSARU in the ENET_PTP_TSCTL register until it is cleared;
6. Set TMSFCU in the ENET_PTP_TSCTL register to 1 to choose fine correction method;
7. Configure the timestamp update high and low register with the value of system time application wants to initialize;
8. Send initialization command by setting TMSSTI in the ENET_PTP_TSCTL register;
9. The timestamp counter starts counting as soon as the initialization process complete.

System time update steps

Coarse correction method

1. Program the offset (may be negative) value in the timestamp update high and low registers;
2. Set bit 3 (TMSSTU) in the ENET_PTP_TSCTL register to update the timestamp register;
3. Poll TMSSTU bit until it is cleared.

Fine correction method

1. Calculate the value of the desired system clock rate corresponding to the addend register (***System time calibration*** has explained before);
2. Program the addend register, and set the TMSARU in ENET_PTP_TSCTL register;
3. Program the target high and low register and reset the TMSTIM of the ENET_MAC_INTMSK register to allow time stamp interrupt;
4. Set TMSITEN in ENET_PTP_TSCTL register;
5. When an interrupt is generated by this event, read out the value of ENET_MAC_INTF register and clear the corresponding interrupt flag;
6. Rewrite the old value of addend register to timestamp addend register and set TMSARU in ENET_PTP_TSCTL register.

Transmission and reception of frames with the PTP feature

After enabled the IEEE 1588 (PTP) timestamp function, timestamp is recorded when the frame's SFD field is outputting from the MAC or the MAC receives a frame's SFD field. Each transmitted frame can be marked in TxDMA descriptor to indicate whether a timestamp should be captured or not, which is unrelated with whether the transmitted frame has PTP feature or not, and the timestamp of all received frames will be recorded if ARFSEN bit in ENET_PTP_TSCTL register is set. If ARFSEN is reset, the received frame which passed the address filer should be matched with the configuration in ENET_PTP_TSCTL register. In another word, only the frame matched the PTP configuration is marked a PTP frame, and timestamp will be recorded in descriptor. To be marked as a PTP frame, the received frame PTP version should be coincide with PFSV bit and then the corresponding frame type enable

bit (bit 13 to bit 11 in register ENET_PTP_TSCTL) is set. Specially, the non-IP payload PTP frame (PTP on normal 802.3 Ethernet frame), also the DA should be the special MAC address (e.g. the DA should be 0x0e00 00c2 8001 for PDELAY_REQ / PDELAY_RESP / PDELAY_RESP_FOLLOW_UP message type, and the DA address 0x0000 0019 1B01 for other message type, detailed informations refer to Specification IEEE1588-2008). If MAFEN is set, this special MAC address can be extended to MAC address1-3 with SAF is reset.

Together with the state information of frame, the recorded timestamp value will also be stored in the corresponding transmission / reception descriptor. The 64-bit timestamp information of transmission frame is written back to the transmit descriptor and the 64-bit timestamp information of reception frame is written back to the receive descriptor. See the detailed description in "***Transmit DMA descriptor with IEEE 1588 timestamp format***" and "***Receive DMA descriptor with IEEE 1588 timestamp format***".

Internal connection trigger

MAC can provide trigger interrupt when the system time is no less than the expected time. Using an interrupt imports a known latency and an uncertainty in the command execution time. Set the TSCFG5[4:0]/TSCFG4[4:0]/TSCFG3[4:0] bit-field in SYSCFG_TIMERxCFG0(x = 1/2/30/31) register to 5'b01001 can make ENET0 signal internally connected to the ITI4 input of event mode configuration/pause mode configuration/restart mode configuration in TIMERx(x = 1/2/30/31). And set the TSCFG7[4:0]/TSCFG6[4:0] bit-field in SYSCFG_TIMERxCFG1(x = 1/2/30/31) register to 5'b01001 can make ENET1 signal internally connected to the ITI4 input of restart + event mode configuration/external clock mode 0 configuration in TIMERx(x = 1/2/30/31).. For this feature designed, no uncertainty is introduced because the clock of the TIMER1/2/30/31 and PTP reference clock (HCLK) are synchronous.

PPS output signal

Enable the ENET0 and ENET1 PPS output function by configuring ETH0_PPS_OUT pin to AF11 and ETH0_PPS_OUT pin to AF6, respectively. This function can output a signal with the pulse width of 125ms by default (other width is detailed in ***PTP PPS control register (ENET_PTP_PPSCTL)***) which can be used to check the synchronization between all nodes in the network. To test the difference between the slave clock and the master clock, both of the slave and master can output PPS(pulse-per-second) and connect them to one oscilloscope for clock measurement.

43.3.7. Example for a typical configuration flow of Ethernet

After power-on reset or system reset, the following operation flow is a typical process for application to configure and run Ethernet:

- **Enable Ethernet clock.**

  Program the RCU module to enable the HCLK and Ethernet Tx / Rx clock.

- **Setup the communication interface.**

  Configure SYSCFG_PMCFG to define which interface mode is selected (MII or RMII). Configure GPIO module to make selected PADs to alternate function.

- **Wait the resetting complete**

  Polling the ENET_DMA_BCTL register until the SWR bit is reset. (SWR bit is set by default after power-on reset or system reset).

- **Obtain and configure the parameters in PHY register**

  According to the frequency of HCLK, configure the SMI clock frequency and access external PHY register to obtain the information of PHY (e.g. support Half / Full duplex or not, support 10M / 100Mbit speed or not, and so on). Based on supported mode of external PHY, configure ENET_MAC_CFG register consistent with PHY register.

- **Initialize the DMA in Ethernet module for transaction**

  Configure the ENET_DMA_BCTL, ENET_DMA_RDTADDR, ENET_DMA_TDTADDR, ENET_DMA_CTL registers to initialize the DMA module. (Detailed information refer to ***DMA controller description***).

- **Initialize the physical memory space for descriptor table and data buffer**

  According to the address value in ENET_DMA_RDTADDR and ENET_DMA_TDTADDR register, program transmitting and receiving descriptors (with DAV=1) and data buffer.

- **Enable MAC and DMA module to start transmit and receive**

  Set TEN and REN bit in ENET_MAC_CFG register to make MAC work for transmit and receive. Set STE and SRE bit in ENET_DMA_CTL register to make DMA controller work for transmit and receive.

- **If transmitting frames is needed**

  1. Choose one or more programmed transmitting descriptor, write the transmit frame data into buffer address which is decided in Transmit Descriptor;
  2. Set the DAV bit in these one or more transmit frame descriptor;
  3. Write any value in ENET_DMA_TPEN register to make TxDMA exit suspend state and start transmitting;
  4. There are two methods for application to confirm whether current transmitting frame is complete or not. The first method is that application can poll the DAV bit of current transmit descriptor until it is reset, this means the transmitting is complete. The second method can be used only when INTC=1. Application can poll the TS bit in ENET_DMA_STAT register until it is set, this means the transmitting is complete.

- **If receiving frames is enabled**

  1. Check the first receive descriptor in descriptor table (whose address is configured in ENET_DMA_RDTADDR register);

2. If DAV bit in Receive Descriptor0 is reset, then the descriptor is used and receive buffer space has stored the receive frame;
3. Handling this receive frame data;
4. Set DAV bit of this descriptor to release this descriptor for new frame receiving;
5. Check next descriptor in table, then goes to Step 2.

43.3.8. Ethernet interrupts

There are two interrupt vectors in Ethernet module. The first interrupt vector is made up of normal operation interrupts and the second vector is made up of WUM events for wakeup which is mapped to the EXTI line 19.

All of the MAC and DMA controller interrupt are connected to the first interrupt vector. The description for the MAC interrupt and DMA controller interrupt are showed behind.

The WUM block event is connected to the second interrupt vector. The event can be remote wakeup frame received event or / and Magic Packet wakeup frame received event. This interrupt is inner mapped on the EXTI line 19. So, if the EXTI line 19 is enabled and configured to trigger by rising edge, the Ethernet WUM event can make the system exiting Deep-sleep mode after a WUM event occurred. In addition, if the WUM interrupt is not masked, both the EXTI line 19 interrupt and Ethernet normal interrupt to CPU are both generated.

Note: Because of the WUM registers are designed in RX_CLK domain, clear these registers by reading them will need a long time delay (depends on the frequency disparity between HCLK and RX_CLK). To avoid entering the same event interrupt twice, it's strongly recommended that application polls the WUFR and MPKR bit until they reset to zero during the interrupt service routine.

MAC interrupts

All of the MAC events can be read from ENET_MAC_INTF and each of them has a mask bit for masking corresponding interrupt. The MAC interrupt is logical ORed of all interrupts.

Figure 43-13. MAC interrupt scheme

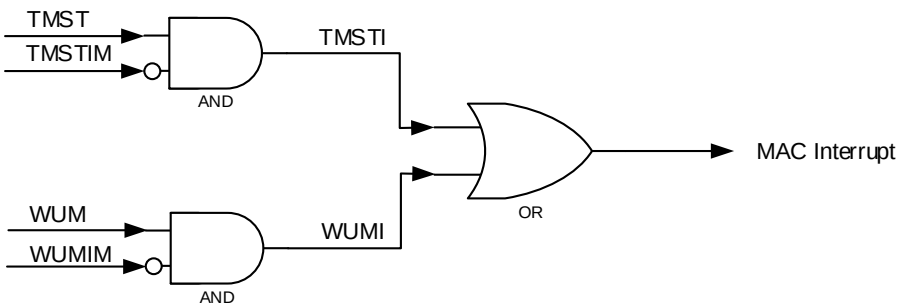

DMA controller interrupts

The DMA controller has two types of event: Normal and Abnormal.

No matter what type the event is, it has an enable bit (just like mask bit) to control the generating interrupt or not. Each event can be cleared by writing 1 to it. When all of the events are cleared or all of the event enable bits are cleared, the corresponding summary interrupt bit is cleared. If both normal and abnormal interrupts are cleared, the DMA interrupt will be cleared.

Figure 43-14. Ethernet interrupt scheme shows the Ethernet module interrupt connection:

Figure 43-14. Ethernet interrupt scheme

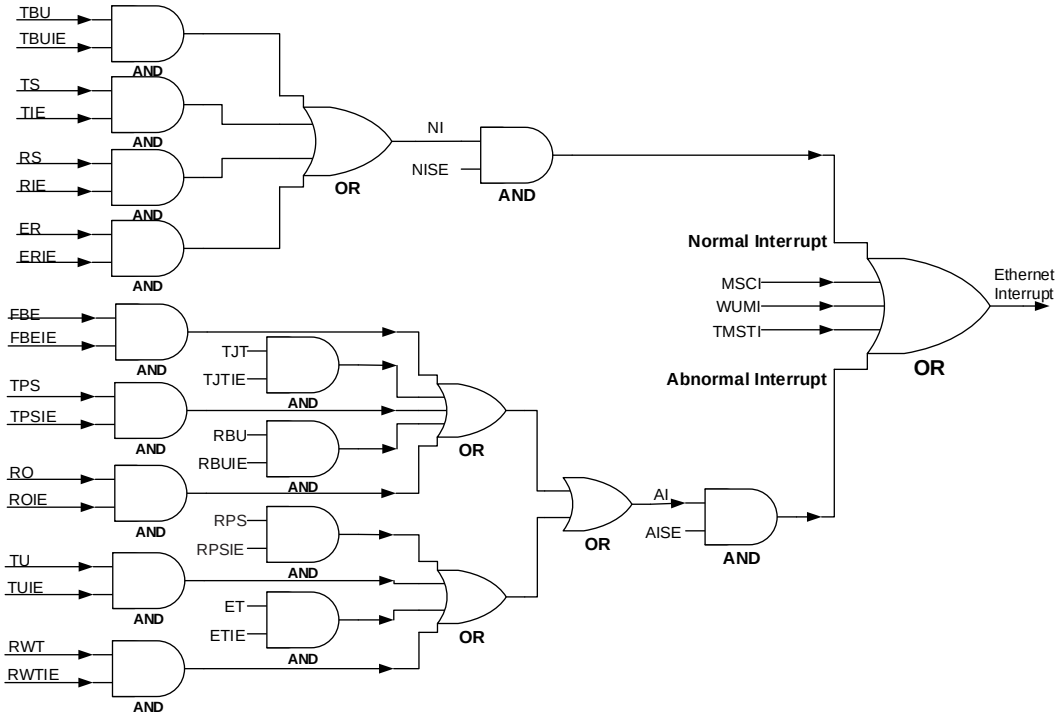

43.4. Register definition

ENET0 base address: 0x4002 8000

ENET1 base address: 0x4002 A000

43.4.1. MAC configuration register (ENET_MAC_CFG)

Address offset: 0x0000

Reset value: 0x0000 8000

This register can be accessed by byte (8-bit), half-word(16-bit) or word (32-bit).

This register configures the operation mode of the MAC. It also configures the MAC receiver and MAC transmitter operating mode.

31	30	29	28	27	26	25	24	23	22	21	20	19	18	17	16
Reserved						TFCD	Reserved	WDD	JBD	Reserved		IGBS[2:0]			CSD
						rw		rw	rw				rw		rw

15	14	13	12	11	10	9	8	7	6	5	4	3	2	1	0
Reserved	SPD	ROD	LBM	DPM	IPFCO	RTD	Reserved	APCD	BOL[1:0]		DFC	TEN	REN	Reserved	
	rw	rw	rw	rw	rw	rw		rw	rw		rw	rw	rw		

Bits	Fields	Descriptions
31:26	Reserved	Must be kept at reset value.
25	TFCD	Type Frame CRC Dropping 0: FCS field (last 4 bytes) of frame will not be dropped before forwarding 1: FCS field (last 4 bytes) of frame will be dropped before forwarding **Note:** This bit only valid when LT field of frame greater than 0x0600.
24	Reserved	Must be kept at reset value.
23	WDD	Watchdog disable bit This bit indicates the maximum bytes for receiving, data beyond this will be cut off. 0: The received frame that Less than or equals to 2048 bytes is allowed by MAC 1: The watchdog timer that on the receiver is disabled by MAC. And the received frame up to 16384 bytes is allowed by MAC.
22	JBD	Jabber disable bit This bit indicates the maximum bytes for transmitting data, data beyond this will be cut off. 0: The maximum transmission byte is 2048 1: The maximum transmission byte can be 16384
21:20	Reserved	Must be kept at reset value.
19:17	IGBS[2:0]	Inter frame gap bit selection bits These bits can select the minimum inter frame gap bit time between two

		neighboring frames during transmission. 0x0: 96 bit times 0x1: 88 bit times 0x2: 80 bit times 0x3: 72 bit times 0x4: 64 bit times 0x5: 56 bit times (For Half-duplex, must be reserved) 0x6: 48 bit times (For Half-duplex, must be reserved) 0x7: 40 bit times (For Half-duplex, must be reserved)
16	CSD	Carrier sense disable bit 0: The carrier sense error is generated by MAC transmitter, and the transmission will be aborted. 1: The MII CRS signal is ignored by MAC transmitter while in frame transmitting. Loss of carrier error and no carrier error will not be generated.
15	Reserved	Must be kept at reset value.
14	SPD	Fast Ethernet speed bit Indicates the speed in Fast Ethernet mode: 0: 10 Mbit / s 1: 100 Mbit / s
13	ROD	Receive own disable bit When in Full-duplex mode, this bit can be ignored. 0: The packets that transmitting from PHY are all received by MAC 1: Receiving frames from PHY is disabled by MAC
12	LBM	Loopback mode bit 0: The MAC is configured in normal mode 1: The MAC is configured in loopback mode at the MII
11	DPM	Duplex mode bit 0: Half-duplex mode enable 1: Full-duplex mode enable
10	IPFCO	IP frame checksum offload bit 0: The checksum offload function in the receiver is disabled 1: IP frame checksum offload function enabled for received IP frame
9	RTD	Retry disable bit When in Full-duplex mode, this bit can be ignored. 0: Up to 16 times retries based on the settings of BOL is attempted by MAC 1: Only 1 transmission is attempted by MAC
8	Reserved	Must be kept at reset value.
7	APCD	Automatic pad / CRC drop bit This bit only valid for a non tagged frame and its length field value is equal or less

		than 1536. 0: The MAC forwards all received frames without modify it 1: The MAC strips the Pad / FCS field on received frames
6:5	BOL[1:0]	Back-off limit bits When in Full-duplex mode, these bits can be ignored.When a collision occurred, the MAC needs to retry sending current frame after delay some time. The base time unit for this delay time (dt) called slot time which means 1 slot time is equal to 512 bit times. This delay time (dt) is a random integer number calculated by following formula: $0 \le dt < 2^{k}$. 0x0: k = min (n, 10) 0x1: k = min (n, 8) 0x2: k = min (n, 4) 0x3: k = min (n, 1), n = number of times for retransmission attempt
4	DFC	Deferral check bit When in Full-duplex mode, this bit can be ignored. 0: Disable the deferral check function of MAC. Until the CRS signals changed to inactive, the MAC defers sending. 1: Enable the deferral check function of MAC. If deferred more than 24288 bit times, excessive deferral error occurs and MAC abort transmitting frame. If CRS signal active during deferral time running, the deferral time will reset and restart.
3	TEN	Transmitter enable bit 0: The MAC transmit function is disabled after finish the transmission of the current frame, and no frames to be transmitted anymore. 1: The transmit function of the MAC is enabled for transmission
2	REN	Receiver enable bit 0: The MAC reception function is disabled after finish the reception of the current frame, and no frames will be received anymore. 1: The MAC reception function is enabled for receiving frames
1:0	Reserved	Must be kept at reset value.

43.4.2. MAC frame filter register (ENET_MAC_FRMF)

Address offset: 0x0004

Reset value: 0x0000 0000

This register can be accessed by byte (8-bit), half-word(16-bit) or word (32-bit).

This register configures the filtering method for receiving frames

31	30	29	28	27	26	25	24	23	22	21	20	19	18	17	16
FAR	Reserved														
rw															
15	14	13	12	11	10	9	8	7	6	5	4	3	2	1	0

Reserved	HPFLT	SAFLT	SAIFLT	PCFRM[1:0]	BFRMD	MFD	DAIFLT	HMF	HUF	PM
	rw	rw	rw	rw	rw	rw	rw	rw	rw	rw

Bits	Fields	Descriptions
31	FAR	Frames all received bit This bit controls the receive filter function. 0: Only the frame passed the filter can be forwarded to application 1: All received frame are forwarded to application. But filter result will also be updated to receive descriptor status.
30:11	Reserved	Must be kept at reset value.
10	HPFLT	Hash or perfect filter bit 0: If the HUF or HMF bit is set, only frames that match the hash filter are passed. 1: If the HUF or HMF bit is set, the receive filter passes frames that match either the perfect filtering or the hash filtering.
9	SAFLT	Source address filter bit Enable source address filtering function besides destination address filtering. The filter also compares the SA field value in received frames with the values configured in the enabled SA registers. If SA comparison matches, the SA match bit in the receive descriptor status is set high. 0: Source address function in filter disable 1: Source address function in filter enable
8	SAIFLT	Source address inverse filtering bit This bit makes the result of SA matching inverse. 0: Not inverse for source address filtering 1: Inverse source address filtering result. When SA matches the enabled SA registers, filter marks it as failing the SA address filter.
7:6	PCFRM[1:0]	Pass control frames bits These bits set the forwarding conditions for all control frames (including unicast and multicast pause frame). For pause control frame, the processing (not forwarding) depends only on RFCEN in ENET_MAC_FCTL[2]. 0x0: The MAC does not forward any control frames to the application 0x1: The MAC forwards any control frames except pause control frames to the application 0x2: Even if the control frames failed the address filter, the MAC forwards all of them to application 0x3: Only the control frames pass the address filter, the MAC forwards them to application
5	BFRMD	Broadcast frames disable bit 0: Ignore the address filters, and all received broadcast frames is passed.

		1: All received broadcast frames is filtered by address filters
4	MFD	Multicast filter disable bit 0: Multicast filter is enabled. The filtering mode of multicast frame is determined by HMF bit. 1: Multicast filter is disabled. All received multicast frames are passed. The first bit in the destination address field of multicast frames is '1', but not all bits in the destination are ‘1’.
3	DAIFLT	Destination address inverse filtering bit This bit makes the result of DA filtering inverse. 0: Not inverse DA filtering result 1: Inverse DA filtering result
2	HMF	Hash multicast filter bit 0: The filter uses perfect mode for filtering multicast frame. 1: The filter uses hash mode for filtering multicast frame
1	HUF	Hash unicast filter bit 0: The filter uses perfect mode for filtering unicast frame 1: The filter uses hash mode for filtering unicast frame
0	PM	Promiscuous mode bit This bit can make the filter bypassed which means all received frames are thought pass the filer and DA / SA filtering result status in descriptor is always ‘0’. 0: Promiscuous mode disabled 1: Promiscuous mode enabled

43.4.3. MAC hash list high register (ENET_MAC_HLH)

Address offset: 0x0008

Reset value: 0x0000 0000

This register can be accessed by byte (8-bit), half-word(16-bit) or word (32-bit).

31	30	29	28	27	26	25	24	23	22	21	20	19	18	17	16
HLH[31:16]															
rw															

15	14	13	12	11	10	9	8	7	6	5	4	3	2	1	0
HLH[15:0]															
rw															

Bits	Fields	Descriptions
31:0	HLH[31:0]	Hash list high bits These bits take the high 32-bit value of hash list.

43.4.4. MAC hash list low register (ENET_MAC_HLL)

Address offset: 0x000C

Reset value: 0x0000 0000

This register can be accessed by byte (8-bit), half-word(16-bit) or word (32-bit).

31	30	29	28	27	26	25	24	23	22	21	20	19	18	17	16
HLL[31:16]															
rw															

15	14	13	12	11	10	9	8	7	6	5	4	3	2	1	0
HLL[15:0]															
rw															

Bits	Fields	Descriptions
31:0	HLL[31:0]	Hash list low bits These bits take the low 32-bit value of hash list.

43.4.5. MAC PHY control register (ENET_MAC_PHY_CTL)

Address offset: 0x0010

Reset value: 0x0000 0000

This register can be accessed by byte (8-bit), half-word(16-bit) or word (32-bit).

31	30	29	28	27	26	25	24	23	22	21	20	19	18	17	16
Reserved															

15	14	13	12	11	10	9	8	7	6	5	4	3	2	1	0
PA[4:0]					PR[4:0]					Reserved	CLR[2:0]			PW	PB
rw					rw						rw			rw	rc_w1

Bits	Fields	Descriptions
31:16	Reserved	Must be kept at reset value.
15:11	PA[4:0]	PHY address bits These bits choose which PHY device is to be accessed.
10:6	PR[4:0]	PHY register bits These bits choose the register address in selected PHY device.
5	Reserved	Must be kept at reset value.
4:2	CLR[2:0]	Clock range bits MDC clock divided factor select which is decided by HCLK frequency range. 0x0: HCLK/42 (HCLK range: 60-100 MHz) 0x1: HCLK/62 (HCLK range: 100-150 MHz)

		0x2: HCLK/16 (HCLK range: 20-35 MHz) 0x3: HCLK/26 (HCLK range: 35-60 MHz) 0x4: HCLK/102 (HCLK range: 150-250 MHz) 0x5: HCLK/124 (HCLK range: 250-300 MHz) other: Reserved
1	PW	PHY write bit This bit indicates the PHY operation mode. 0: Sending read operation to PHY 1: Sending write operation to PHY
0	PB	PHY busy bit This bit indicates the running state of operation on PHY. Application sets this bit to 1 and should wait it cleared by hardware. Application must make sure this bit is zero before writing data to ENET_MAC_PHY_CTL register and reading / writing data from / to ENET_MAC_PHY_DATA register.

43.4.6. MAC PHY data register (ENET_MAC_PHY_DATA)

Address offset: 0x0014

Reset value: 0x0000 0000

This register can be accessed by byte (8-bit), half-word(16-bit) or word (32-bit).

31	30	29	28	27	26	25	24	23	22	21	20	19	18	17	16
Reserved															

15	14	13	12	11	10	9	8	7	6	5	4	3	2	1	0
PD[15:0]															
rw															

Bits	Fields	Descriptions
31:16	Reserved	Must be kept at reset value.
15:0	PD[15:0]	PHY data bits For reading operation, these bits contain the data from external PHY. For writing operation, these bits contain the data will be sent to external PHY.

43.4.7. MAC flow control register (ENET_MAC_FCTL)

Address offset: 0x0018

Reset value: 0x0000 0000

This register can be accessed by byte (8-bit), half-word(16-bit) or word (32-bit).

This register configures the generation and reception of the control frames.

31	30	29	28	27	26	25	24	23	22	21	20	19	18	17	16

PTM[15:0]															
rw															
15	14	13	12	11	10	9	8	7	6	5	4	3	2	1	0
Reserved								DZQP	Reserved	PLTS[1:0]		UPFDT	RFCEN	TFCEN	FLCB / BKPA
								rw		rw		rw	rw	rw	rw

Bits	Fields	Descriptions
31:16	PTM[15:0]	Pause time bits These bits configured the pause time filed value in transmit pause control frame.
15:8	Reserved	Must be kept at reset value.
7	DZQP	Disable Zero-quanta pause bit 0: Enable automatic zero-quanta generation function for pause control frame 1: Disable the automatic zero-quanta generation function for pause control frame
6	Reserved	Must be kept at reset value.
5:4	PLTS[1:0]	Pause low threshold bits These bits configure the threshold of the pause timer for retransmitting frames automatically. Application must make sure the low threshold bits are greater than 0 and less than configured pause time. The low threshold calculation formula is PTM-PLTS. For example, if PTM = 0x80 (128 slot-times), and PLTS = 0x1 (28 slot-times), then the second pause frame is automatically transmitted when pause timer counted at 100 (128 - 28) slot-times after the first pause frame is transmitted. 0x0: 4 slot times is subtracted by pause time 0x1: 28 slot times is subtracted by pause time 0x2: 144 slot times is subtracted by pause time 0x3: 256 slot times is subtracted by pause time **Note:** One slot time equals the time of transmitting 512 bits on the MII interface.
3	UPFDT	Unicast pause frame detect bit 0: Only the unique multicast address for pause frame which is specified in IEEE802.3 can be detected 1: Besides the unique multicast address, MAC can also use the MAC0 address (ENET_MAC_ADDR0H and ENET_MAC_ADDR0L register) to detecting pause frame.
2	RFCEN	Receive flow control enable bit 0: Decode function for pause frame is disabled 1: Enable decoding function for the received pause frame and process it. The MAC disables its transmitter for a specified (pause time field value in received frame) time.
1	TFCEN	Transmit flow control enable bit 0: Disable the flow control operation in the MAC. Both pause frame sending in Full-duplex mode and back-pressure feature in Half-duplex mode are not performed.

		1: Enable the flow control operation in the MAC. Both pause frame sending in Full-duplex mode and back-pressure feature in Half-duplex mode can be performed by transmitter.
0	FLCB / BKPA	Flow control busy / back pressure activate bit This bit only valid when TFCEN is set. This bit can send a pause frame in Full-duplex mode or activate the back pressure function in Half-duplex mode by application. For Full-duplex mode, application must make sure this bit is 0 before writing ENET_MAC_FCTL register. After set by application, MAC sends a pause frame to interface and this bit will keep set until the pause frame has completed transmitting. For Half-duplex mode, MAC can enter back-pressure state by application setting this bit. When the MAC is in back-pressure state, any frame presented on interface will make the MAC send a JAM pattern to inform outside a collision occurred.

43.4.8. MAC VLAN tag register (ENET_MAC_VLT)

Address offset: 0x001C
Reset value: 0x0000 0000

This register can be accessed by byte (8-bit), half-word(16-bit) or word (32-bit).

This register configures the IEEE 802.1Q VLAN Tag to identify the VLAN frames. The MAC compares the 13th and 14th byte (length / type field) of the receiving frame with 0x8100, and the following 2 bytes (the 15th and 16th byte) are compared with the VLAN tag.

31	30	29	28	27	26	25	24	23	22	21	20	19	18	17	16
Reserved															VLTC
															rw

15	14	13	12	11	10	9	8	7	6	5	4	3	2	1	0
VLTI[15:0]															
rw															

Bits	Fields	Descriptions
31:17	Reserved	Must be kept at reset value.
16	VLTC	12-bit VLAN tag comparison bit This bit selects 12 or 16 bit VLAN tag for comparison. 0: All 16 bits (the 15th and 16th byte) of the VLAN tag in received frame are used for comparison 1: Only low 12 bits of the VLAN tag in received frame are used for comparison
15:0	VLTI[15:0]	VLAN tag identifier (for receive frames) bits These bits are configured for detecting VLAN frame using 802.1Q VLAN tag format. The format shows below: VLTI[15:13]: UP (user priority)

VLTI[12]: CFI (canonical format indicator)

VLTI[11:0]: VID (VLAN identifier)

When comparison bits (VLTI[11:0] if VLTC=1 or VLTI[15:0] if VLTC=0) are all zeros, VLAN tag comparison is bypassed and every frame with type filed value of 0x8100 is considered a VLAN frame.

When comparison bits not all zeros, VLAN tag comparison use bit VLTI[11:0] (if VLTC=1) or VLTI[15:0] (if VLTC=0) for checking.

43.4.9. MAC remote wakeup frame filter register (ENET_MAC_RWFF)

Address offset: 0x0028

Reset value: 0x0000 0000

This register can be accessed by byte (8-bit), half-word(16-bit) or word (32-bit).

The MAC remote wakeup frame filter register is actually a pointer to eight (with same address offset) such wakeup frame filter registers. Eight sequential write operations to this address with the offset (0x0028) will write all wakeup frame filter registers. Eight sequential read operations from this address with the offset (0x0028) will read all wakeup frame filter registers.

Figure 43-15. Wakeup frame filter register

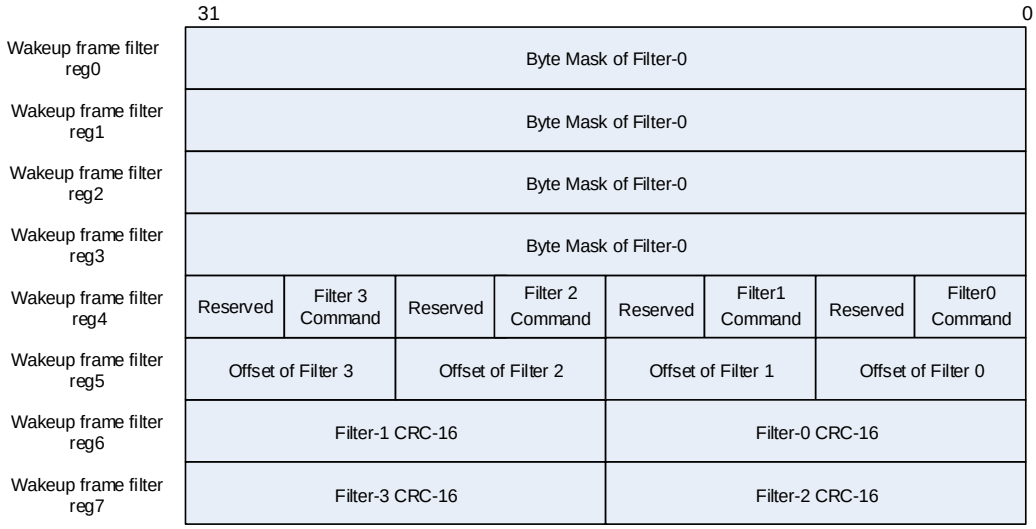

43.4.10. MAC wakeup management register (ENET_MAC_WUM)

Address offset: 0x002C

Reset value: 0x0000 0000

This register can be accessed by byte (8-bit), half-word(16-bit) or word (32-bit).

This register configures the request of wakeup events and monitors the wakeup events.

31	30	29	28	27	26	25	24	23	22	21	20	19	18	17	16
WUFFRPR	Reserved														
rs															

15	14	13	12	11	10	9	8	7	6	5	4	3	2	1	0
Reserved						GU	Reserved		WUFR	MPKR	Reserved		WFEN	MPEN	PWD
						rw			rc_r	rc_r			rw	rw	rs

Bits	Fields	Descriptions
31	WUFFRPR	Wakeup frame filter register pointer reset bit This bit can reset the inner pointer of ENET_MAC_RWFF register by application set it to 1. Hardware clears it when resetting completes. 0: No effect 1: Reset the ENET_MAC_RWFF register inner pointer
30:10	Reserved	Must be kept at reset value.
9	GU	Global unicast bit 0: Not all of received unicast frame is considered to be a wakeup frame 1: Any received unicast frame passed address filtering is considered to be a wakeup frame
8:7	Reserved	Must be kept at reset value.
6	WUFR	Wakeup frame received bit This bit is cleared when this register is read. 0: Has not received the wake-up frame 1:The wakeup event was generated due to reception of a wakeup frame
5	MPKR	Magic packet received bit This bit is cleared when this register is read. 0: Has not received the Magic Packet frame 1: Received the Magic Packet frame, and generating the wakeup event
4:3	Reserved	Must be kept at reset value.
2	WFEN	Wakeup frame enable bit 0: Disable generating a wakeup event due to wakeup frame reception 1: Enable generating a wakeup event due to wakeup frame reception
1	MPEN	Magic Packet enable bit 0: Disable generating a wakeup event due to Magic Packet reception 1: Enable generating a wakeup event due to Magic Packet reception
0	PWD	Power down bit This bit is set by application and reset by hardware. When this bit is set, MAC drops all received frames. When power-down mode exit because of wakeup event occurred, hardware resets this bit.

43.4.11. MAC debug register (ENET_MAC_DBG)

Address offset: 0x0034

Reset value: 0x0000 0000

This register can be accessed by byte (8-bit), half-word(16-bit) or word (32-bit).

31	30	29	28	27	26	25	24	23	22	21	20	19	18	17	16
Reserved						TXFF	TXFNE	Reserved	TXFW	TXFRS[1:0]		PCS	SOMT[1:0]		MTNI
						ro	ro		ro	ro		ro	ro		ro

15	14	13	12	11	10	9	8	7	6	5	4	3	2	1	0
Reserved						RXFS[1:0]		Reserved	RXFRS[1:0]		RXFW	Reserved	RXAFS[1:0]		MRNI
						ro			ro		ro		ro		ro

Bits	Fields	Descriptions
31:26	Reserved	Must be kept at reset value.
25	TXFF	TxFIFO Full flag 0: TxFIFO is not full 1: TxFIFO is full
24	TXFNE	TxFIFO not empty flag 0: TxFIFO is empty 1: TxFIFO is not empty
23	Reserved	Must be kept at reset value.
22	TXFW	TxFIFO is writing 0: TxFIFO is not doing write operation 1: TxFIFO is doing write operation
21:20	TXFRS[1:0]	TxFIFO read operation status 0x0: TxFIFO read controller is in idle state 0x1: TxFIFO read controller is in reading state 0x2: TxFIFO read controller is in waiting feedback Tx status from MAC transmitter 0x3: TxFIFO read controller is in writing the Tx descriptor status or flushing the TxFIFO
19	PCS	Pause condition status 0: MAC transmitter is not in pause condition 1: MAC transmitter is under pause condition and will delay transmitting frame
18:17	SOMT[1:0]	Status of MAC transmitter 0x0: The MAC transmitter controller is in idle state 0x1: The MAC transmitter controller is in Waiting feedback of previous frame status or the end of IFG / BACKOFF period 0x2: For Full-duplex mode, indicates pause control frame is transmitting 0x3: The MAC transmitter controller is in Reading input frame from FIFO for transmission
16	MTNI	MAC transmit state not idle 0: MAC transmitter is in idle state

		1: MAC transmitter is not in idle state
15:10	Reserved	Must be kept at reset value.
9:8	RXFS	RxFIFO state 0x0: The RxFIFO is empty 0x1: The flow-control low threshold is greater than RxFIFO number of value 0x2: The flow-control high threshold is lower than RxFIFO number of value 0x3: The RxFIFO is full
7	Reserved	Must be kept at reset value.
6:5	RXFRS[1:0]	RxFIFO read operation status 0x0: RxFIFO read controller is in idle state 0x1: RxFIFO read controller is in reading state 0x2: RxFIFO read controller is reading frame status (including time-stamp) 0x3: RxFIFO read controller is flushing frame
4	RXFW	RxFIFO is writing 0: RxFIFO is not doing write operation 1: RxFIFO is doing write operation
3	Reserved	Must be kept at reset value.
2:1	RXAFS[1:0]	Rx asynchronous FIFO status RXAFS[1]:Rx asynchronous FIFO reading state in HCLK Clock domain RXAFS[0]:Rx asynchronous FIFO writing state in MAC RX_CLK Clock domain
0	MRNI	MAC receive state not idle 0: MAC receiver is in idle state 1: MAC receiver is not in idle state

43.4.12. MAC interrupt flag register (ENET_MAC_INTF)

Address offset: 0x0038

Reset value: 0x0000 0000

This register can be accessed by byte (8-bit), half-word(16-bit) or word (32-bit).

31	30	29	28	27	26	25	24	23	22	21	20	19	18	17	16
Reserved															

15	14	13	12	11	10	9	8	7	6	5	4	3	2	1	0
Reserved						TMST	Reserved		MSCT	MSCR	MSC	WUM	Reserved		
						rc_r			r	r	r	r			

Bits	Fields	Descriptions
31:10	Reserved	Must be kept at reset value.

9	TMST	Time stamp trigger status bit This bit is cleared when ENET_PTP_TSF register is read. 0: The system time value is less than the value specified in the the ENET_PTP_ETH and ENET_PTP_ETL registers 1: The system time value is no less than the value specified in the ENET_PTP_ETH and ENET_PTP_ETL registers
8:7	Reserved	Must be kept at reset value.
6	MSCT	MSC transmit status bit 0: All the bits in register ENET_MSC_TINTF are cleared 1: An interrupt is generated in the ENET_MSC_TINTF register
5	MSCR	MSC receive status bit 0: All the bits in register ENET_MSC_RINTF are cleared 1: An interrupt is generated in the ENET_MSC_RINTF register
4	MSC	MSC status bit This bit is logic ORed from MSCT and MSCR bit. 0: Both MSCT and MSCR bits in this register are low 1: Any of bit 6 (MSCT) or bit 5 (MSCR) is set high
3	WUM	WUM status bit This bit is logic ORed from WUFR and MPKR bit in ENET_MAC_WUM register. 0: Wakeup frame or Magic Packet frame is not received 1: A Magic packet or remote wakeup frame is received in power down Mode
2:0	Reserved	Must be kept at reset value.

43.4.13. MAC interrupt mask register (ENET_MAC_INTMSK)

Address offset: 0x003C

Reset value: 0x0000 0000

This register can be accessed by byte (8-bit), half-word(16-bit) or word (32-bit).

31	30	29	28	27	26	25	24	23	22	21	20	19	18	17	16
Reserved															

15	14	13	12	11	10	9	8	7	6	5	4	3	2	1	0
Reserved						TMSTIM	Reserved					WUMIM	Reserved		
						rw						rw			

Bits	Fields	Descriptions
31:10	Reserved	Must be kept at reset value.
9	TMSTIM	Timestamp trigger interrupt mask bit 0: Unmask the timestamp interrupt generation

		1: Mask the timestamp interrupt generation
8:4	Reserved	Must be kept at reset value.
3	WUMIM	WUM interrupt mask bit 0: Unmask the interrupt generation due to the WUM bit in ENET_MAC_INTF register 1: Mask the interrupt generation due to the WUM bit in ENET_MAC_INTF register
2:0	Reserved	Must be kept at reset value.

43.4.14. MAC address 0 high register (ENET_MAC_ADDR0H)

Address offset: 0x0040

Reset value: 0x8000 FFFF

This register can be accessed by byte (8-bit), half-word(16-bit) or word (32-bit).

31	30	29	28	27	26	25	24	23	22	21	20	19	18	17	16
MO	Reserved														
rw															

15	14	13	12	11	10	9	8	7	6	5	4	3	2	1	0
ADDR0H[15:0]															
rw															

Bits	Fields	Descriptions
31	MO	Always read 1 and must be kept.
30:16	Reserved	Must be kept at reset value.
15:0	ADDR0H[15:0]	MAC address0 high16-bit These bits contain the high 16-bit (bit 47 to 32) of the 6-byte MAC address0. These bits are used for address filtering in frame reception and address inserting in pause frame transmitting during transmit flow control.

43.4.15. MAC address 0 low register (ENET_MAC_ADDR0L)

Address offset: 0x0044

Reset value: 0xFFFF FFFF

This register can be accessed by byte (8-bit), half-word(16-bit) or word (32-bit).

31	30	29	28	27	26	25	24	23	22	21	20	19	18	17	16
ADDR0L[31:16]															
rw															

15	14	13	12	11	10	9	8	7	6	5	4	3	2	1	0
ADDR0L[15:0]															
rw															

Bits	Fields	Descriptions
31:0	ADDR0L[31:0]	MAC addresss0 low 32-bit These bits contain the low 32-bit (bit 31 to 0) of the 6-byte MAC address0. These bits are used for address filtering in frame reception and address inserting in pause frame transmitting during transmit flow control.

43.4.16. MAC address 1 high register (ENET_MAC_ADDR1H)

Address offset: 0x0048

Reset value: 0x0000 FFFF

This register can be accessed by byte (8-bit), half-word(16-bit) or word (32-bit).

31	30	29	28	27	26	25	24	23	22	21	20	19	18	17	16
AFE	SAF	MB[5:0]						Reserved							
rw	rw	rw													

15	14	13	12	11	10	9	8	7	6	5	4	3	2	1	0
ADDR1H[15:0]															
rw															

Bits	Fields	Descriptions
31	AFE	Address filter enable bit 0: MAC address1 is ignored by address filter for filtering 1: MAC address1 is used by address filter for perfect filtering
30	SAF	Source address filter bit 0: Comparing MAC address1 with the destination address field of the received frame 1: Comparing MAC address1 with the source address field of the received frame
29:24	MB[5:0]	Mask byte bits If these bits is set, the destination address / source address corresponding byte of the received frame is not compared with MAC address1. Each bit controls one byte mask as follows: MB[5]: ENET_MAC_ADDR1H[15:8] MB[4]: ENET_MAC_ADDR1H[7:0] MB[3]: ENET_MAC_ADDR1L[31:24] MB[2]: ENET_MAC_ADDR1L[23:16] MB[1]: ENET_MAC_ADDR1L[15:8] MB[0]: ENET_MAC_ADDR1L[7:0]
23:16	Reserved	Must be kept at reset value.
15:0	ADDR1H[15:0]	MAC address1 high[47:32] bits This field contains the high 16-bit (bit 47 to 32) of the 6-byte MAC address1.

43.4.17. MAC address 1 low register (ENET_MAC_ADDR1L)

Address offset: 0x004C

Reset value: 0xFFFF FFFF

This register can be accessed by byte (8-bit), half-word(16-bit) or word (32-bit).

31	30	29	28	27	26	25	24	23	22	21	20	19	18	17	16
ADDR1L[31:16]															
rw															

15	14	13	12	11	10	9	8	7	6	5	4	3	2	1	0
ADDR1L[15:0]															
rw															

Bits	Fields	Descriptions
31:0	ADDR1L[31:0]	MAC address1 low 32-bit This field contains the low 32-bit of the 6-byte MAC address1.

43.4.18. MAC address 2 high register (ENET_MAC_ADDR2H)

Address offset: 0x0050

Reset value: 0x0000 FFFF

This register can be accessed by byte (8-bit), half-word(16-bit) or word (32-bit).

31	30	29	28	27	26	25	24	23	22	21	20	19	18	17	16
AFE	SAF	MB[5:0]						Reserved							
rw	rw	rw													

15	14	13	12	11	10	9	8	7	6	5	4	3	2	1	0
ADDR2H[15:0]															
rw															

Bits	Fields	Descriptions
31	AFE	Address filter enable bit 0: MAC address2 is ignored by address filter for filtering 1: MAC address2 is used by address filter for perfect filtering
30	SAF	Source address filter bit 0: Comparing MAC address2 with the destination address field of the received frame 1: Comparing MAC address2 with the source address field of the received frame
29:24	MB[5:0]	Mask byte bits If these bits is set, the destination address / source address corresponding byte of the received frame is not compared with MAC address2. Each bit controls one byte mask as follows:

		MB[5]: ENET_MAC_ADDR2H[15:8] MB[4]: ENET_MAC_ADDR2H[7:0] MB[3]: ENET_MAC_ADDR2L[31:24] MB[2]: ENET_MAC_ADDR2L[23:16] MB[1]: ENET_MAC_ADDR2L[15:8] MB[0]: ENET_MAC_ADDR2L[7:0]
23:16	Reserved	Must be kept at reset value.
15:0	ADDR2H[15:0]	MAC address2 high 16-bit This field contains the high 16-bit (bit 47 to 32) of the 6-byte MAC address2.

43.4.19. MAC address 2 low register (ENET_MAC_ADDR2L)

Address offset: 0x0054

Reset value: 0xFFFF FFFF

This register can be accessed by byte (8-bit), half-word(16-bit) or word (32-bit).

31	30	29	28	27	26	25	24	23	22	21	20	19	18	17	16
ADDR2L[31:16]															
rw															

15	14	13	12	11	10	9	8	7	6	5	4	3	2	1	0
ADDR2L[15:0]															
rw															

Bits	Fields	Descriptions
31:0	ADDR2L[31:0]	MAC address2 low 32-bit This field contains the low 32-bit of the 6-byte MAC address2.

43.4.20. MAC address 3 high register (ENET_MAC_ADDR3H)

Address offset: 0x0058

Reset value: 0x0000 FFFF

This register can be accessed by byte (8-bit), half-word(16-bit) or word (32-bit).

31	30	29	28	27	26	25	24	23	22	21	20	19	18	17	16
AFE	SAF	MB[5:0]						Reserved							
rw	rw	rw													

15	14	13	12	11	10	9	8	7	6	5	4	3	2	1	0
ADDR3H[15:0]															
rw															

Bits	Fields	Descriptions
31	AFE	Address filter enable bit

		0: MAC address3 is ignored by address filter for filtering 1: MAC address3 is used by address filter for perfect filtering
30	SAF	Source address filter bit 0: Comparing MAC address3 with the destination address field of the received frame 1: Comparing MAC address3 with the source address field of the received frame
29:24	MB[5:0]	Mask byte bits If these bits is set, the destination address / source address corresponding byte of the received frame is not compared with MAC address3. Each bit controls one byte mask as follows: MB[5]: ENET_MAC_ADDR3H[15:8] MB[4]: ENET_MAC_ADDR3H[7:0] MB[3]: ENET_MAC_ADDR3L[31:24] MB[2]: ENET_MAC_ADDR3L[23:16] MB[1]: ENET_MAC_ADDR3L[15:8] MB[0]: ENET_MAC_ADDR3L[7:0]
23:16	Reserved	Must be kept at reset value.
15:0	ADDR3H[15:0]	MAC address3 high 16-bit This field contains the high 16-bit (bit 47 to 32) of the 6-byte MAC address3.

43.4.21. MAC address 3 low register (ENET_MAC_ADDR3L)

Address offset: 0x005C

Reset value: 0xFFFF FFFF

This register can be accessed by byte (8-bit), half-word(16-bit) or word (32-bit).

31	30	29	28	27	26	25	24	23	22	21	20	19	18	17	16
ADDR3L[31:16]															
rw															

15	14	13	12	11	10	9	8	7	6	5	4	3	2	1	0
ADDR3L[15:0]															
rw															

Bits	Fields	Descriptions
31:0	ADDR3L[31:0]	MAC address3 low 32-bit This field contains the low 32-bit of the 6-byte MAC address3.

43.4.22. MAC flow control threshold register (ENET_MAC_FCTH)

Address offset: 0x1080

Reset value: 0x0000 0015

This register can be accessed by byte (8-bit), half-word(16-bit) or word (32-bit).

31	30	29	28	27	26	25	24	23	22	21	20	19	18	17	16
Reserved															

15	14	13	12	11	10	9	8	7	6	5	4	3	2	1	0
Reserved									RFD[2:0]			Reserved	RFA[2:0]		
									rw				rw		

Bits	Fields	Descriptions
31:7	Reserved	Must be kept at reset value.
6:4	RFD[2:0]	Threshold of deactive flow control This field configures the threshold of the deactive flow control. The value should always be less than the Threshold of active flow control value configured in bits[2:0]. When the value of the unprocessed data in RxFIFO is less than this value configured, the flow control function will deactive. 0x0: 256 bytes 0x1: 512 bytes 0x2: 768 bytes 0x3: 1024 bytes 0x4: 1280 bytes 0x5: 1536 bytes 0x6,0x7: 1792 bytes
3	Reserved	Must be kept at reset value.
2:0	RFA[2:0]	Threshold of active flow control This field configures the threshold of the active flow control. If flow control function is enabled, when the value of the unprocessed data in RxFIFO is more than this value configured, the flow control function will active. 0x0: 256 bytes 0x1: 512 bytes 0x2: 768 bytes 0x3: 1024 bytes 0x4: 1280 bytes 0x5: 1536 bytes 0x6,0x7: 1792 bytes

43.4.23. MSC control register (ENET_MSC_CTL)

Address offset: 0x0100

Reset value: 0x0000 0000

This register can be accessed by byte (8-bit), half-word(16-bit) or word (32-bit).

31	30	29	28	27	26	25	24	23	22	21	20	19	18	17	16

Reserved

15	14	13	12	11	10	9	8	7	6	5	4	3	2	1	0
Reserved										AFHPM	PMC	MCFZ	RTOR	CTSR	CTR
										rw	wo	rw	rw	rw	rw

Bits	Fields	Descriptions
31:6	Reserved	Must be kept at reset value.
5	AFHPM	Almost full or half preset mode 0: Preset all MSC counters to almost-half (0x7FFF FFF0) value 1: Preset all MSC counters to almost-full (0xFFFF FFF0) value **Note:** This bit is valid only when PMC is set.
4	PMC	Preset MSC counter 0: No effect 1: Preset MSC counters to a preset value. Preset value depends on AFHPM.
3	MCFZ	MSC counter freeze bit 0: MSC counters are not frozen 1: Freezes all the MSC counters to their current value. RTOR bit can work on this frozen state.
2	RTOR	Reset on read bit 0: The MSC counters are not reset after reading MSC counter 1: The MSC counters are reset to zero after read them
1	CTSR	Counter stop rollover bit 0: The counters roll over to zero after they reached the maximum value 1: The counters do not roll over to zero after they reached the maximum value
0	CTR	Counter reset bit Cleared by hardware 1 clock after set. This bit is cleared automatically after 1 clock cycle. 0: No effect 1: Reset all counters

43.4.24. MSC receive interrupt flag register (ENET_MSC_RINTF)

Address offset: 0x0104

Reset value: 0x0000 0000

This register can be accessed by byte (8-bit), half-word(16-bit) or word (32-bit).

31	30	29	28	27	26	25	24	23	22	21	20	19	18	17	16
Reserved														RGUF	Reserved
														rc_r	

15	14	13	12	11	10	9	8	7	6	5	4	3	2	1	0
Reserved									RFAE	RFCE	Reserved				
									rc_r	rc_r					

Bits	Fields	Descriptions
31:18	Reserved	Must be kept at reset value.
17	RGUF	Received good unicast frames bit 0: Good unicast frame received counter is less than half of the maximum value 1: Good unicast frame received counter reaches half of the maximum value
16:7	Reserved	Must be kept at reset value.
6	RFAE	Received frames alignment error bit 0: Alignment error frame received counter is less than half of the maximum value 1: Alignment error frame received counter reaches half of the maximum value
5	RFCE	Received frames CRC error bit 0: CRC error frame received counter is less than half of the maximum value 1: CRC error frame received counter reaches half of the maximum value
4:0	Reserved	Must be kept at reset value.

43.4.25. MSC transmit interrupt flag register (ENET_MSC_TINTF)

Address offset: 0x0108

Reset value: 0x0000 0000

This register can be accessed by byte (8-bit), half-word(16-bit) or word (32-bit).

31	30	29	28	27	26	25	24	23	22	21	20	19	18	17	16
Reserved										TGF	Reserved				
										rc_r					

15	14	13	12	11	10	9	8	7	6	5	4	3	2	1	0
TGFMSC	TGFSC	Reserved													
rc_r	rc_r														

Bits	Fields	Descriptions
31:22	Reserved	Must be kept at reset value.
21	TGF	Transmitted good frames bit 0: Good frame transmitted counter is less than half of the maximum value 1: Good frame transmitted counter reaches half of the maximum value
20:16	Reserved	Must be kept at reset value.
15	TGFMSC	Transmitted good frames more single collision bit 0: Good frame after more than a single collision transmitted counter is less than half

		of the maximum value 1:Good frame after more than a single collision transmitted counter reaches half of the maximum value
14	TGFSC	Transmitted good frames single collision bit 0: Good frame after a single collision transmitted counter is less than half of the maximum value 1: Good frame after a single collision transmitted counter reaches half of the maximum value
13:0	Reserved	Must be kept at reset value.

43.4.26. MSC receive interrupt mask register (ENET_MSC_RINTMSK)

Address offset: 0x010C

Reset value: 0x0000 0000

This register can be accessed by byte (8-bit), half-word(16-bit) or word (32-bit).

The Ethernet MSC receive interrupt mask register maintains the masks for interrupts generated when receive statistic counters reach half their maximum value

31	30	29	28	27	26	25	24	23	22	21	20	19	18	17	16
Reserved														RGUFIM	Reserved
														rw	

15	14	13	12	11	10	9	8	7	6	5	4	3	2	1	0
Reserved									RFAEIM	RFCEIM	Reserved				
									rw	rw					

Bits	Fields	Descriptions
31:18	Reserved	Must be kept at reset value.
17	RGUFIM	Received good unicast frames interrupt mask bit 0: Unmask the interrupt when the RGUF bit is set 1: Mask the interrupt when RGUF bit is set
16:7	Reserved	Must be kept at reset value.
6	RFAEIM	Received frames alignment error interrupt mask bit 0: Unmask the interrupt when the RFAE bit is set 1: Mask the interrupt when the RFAE bit is set
5	RFCEIM	Received frame CRC error interrupt mask bit 0: Unmask the interrupt when RFCE bit is set 1: Mask the interrupt when the RFCE bit is set
4:0	Reserved	Must be kept at reset value.

43.4.27. MSC transmit interrupt mask register (ENET_MSC_TINTMSK)

Address offset: 0x0110

Reset value: 0x0000 0000

This register can be accessed by byte (8-bit), half-word(16-bit) or word (32-bit).

The MSC transmit interrupt mask register configures the mask bits for interrupts generation

31	30	29	28	27	26	25	24	23	22	21	20	19	18	17	16
Reserved										TGFIM	Reserved				
										rw					

15	14	13	12	11	10	9	8	7	6	5	4	3	2	1	0
TGFMSCIM	TGFSCIM	Reserved													
rw	rw														

Bits	Fields	Descriptions
31:22	Reserved	Must be kept at reset value.
21	TGFIM	Transmitted good frames interrupt mask bit 0: Unmask the interrupt when the TGF bit is set 1:Mask the interrupt when the TGF bit is set
20:16	Reserved	Must be kept at reset value.
15	TGFMSCIM	Transmitted good frames more single collision interrupt mask bit 0: Unmask the interrupt when the TGFMSC bit is set 1: Mask the interrupt when the TGFMSC bit is set
14	TGFSCIM	Transmitted good frames single collision interrupt mask bit 0: Unmask the interrupt when the TFGSC bit is set 1: Mask the interrupt when the TFGSC bit is set
13:0	Reserved	Must be kept at reset value.

43.4.28. MSC transmitted good frames after a single collision counter register (ENET_MSC_SCCNT)

Address offset: 0x014C

Reset value: 0x0000 0000

This register can be accessed by byte (8-bit), half-word(16-bit) or word (32-bit).

This register counts the number of successfully transmitted frames after a single collision in Half-duplex mode.

31	30	29	28	27	26	25	24	23	22	21	20	19	18	17	16
SCC[31:16]															
r															

15	14	13	12	11	10	9	8	7	6	5	4	3	2	1	0
SCC[15:0]															
r															

Bits	Fields	Descriptions
31:0	SCC[31:0]	Transmitted good frames single collision counter bits These bits count the number of a transmitted good frames after only a single collision.

43.4.29. MSC transmitted good frames after more than a single collision counter register (ENET_MSC_MSCCNT)

Address offset: 0x0150
Reset value: 0x0000 0000

This register can be accessed by byte (8-bit), half-word(16-bit) or word (32-bit).

This register counts the number of successfully transmitted frames after more than one single collision in Half-duplex mode.

31	30	29	28	27	26	25	24	23	22	21	20	19	18	17	16
MSCC[31:16]															
r															

15	14	13	12	11	10	9	8	7	6	5	4	3	2	1	0
MSCC[15:0]															
r															

Bits	Fields	Descriptions
31:0	MSCC[31:0]	Transmitted good frames more one single collision counter bits These bits count the number of a transmitted good frames after more than one single collision.

43.4.30. MSC transmitted good frames counter register (ENET_MSC_TGFCNT)

Address offset: 0x0168
Reset value: 0x0000 0000

This register can be accessed by byte (8-bit), half-word(16-bit) or word (32-bit).

This register counts the number of good frames transmitted.

31	30	29	28	27	26	25	24	23	22	21	20	19	18	17	16
TGF[31:16]															
r															

15	14	13	12	11	10	9	8	7	6	5	4	3	2	1	0

TGF[15:0]
r

Bits	Fields	Descriptions
31:0	TGF[31:0]	Transmitted good frames counter bits These bits count the number of transmitted good frames.

43.4.31. MSC received frames with CRC error counter register (ENET_MSC_RFCECNT)

Address offset: 0x0194

Reset value: 0x0000 0000

This register can be accessed by byte (8-bit), half-word(16-bit) or word (32-bit).

This register counts the number of frames received with CRC error.

31	30	29	28	27	26	25	24	23	22	21	20	19	18	17	16
RFCER[31:16]															
r															

15	14	13	12	11	10	9	8	7	6	5	4	3	2	1	0
RFCER[15:0]															
r															

Bits	Fields	Descriptions
31:0	RFCER[31:0]	Received frames with CRC error counter bits These bits count the number of receive frames with CRC error.

43.4.32. MSC received frames with alignment error counter register (ENET_MSC_RFAECNT)

Address offset: 0x0198

Reset value: 0x0000 0000

This register can be accessed by byte (8-bit), half-word(16-bit) or word (32-bit).

This register counts the number of received frames with alignment error.

31	30	29	28	27	26	25	24	23	22	21	20	19	18	17	16
RFAER[31:16]															
r															

15	14	13	12	11	10	9	8	7	6	5	4	3	2	1	0
RFAER[15:0]															
r															

Bits	Fields	Descriptions
31:0	RFAER[31:0]	Received frames alignment error counter bits These bits count the number of receive frames with alignment error.

43.4.33. MSC received good unicast frames counter register (ENET_MSC_RGUFCNT)

Address offset: 0x01C4
Reset value: 0x0000 0000

This register can be accessed by byte (8-bit), half-word(16-bit) or word (32-bit).

This register counts the number of good unicast frames received.

31	30	29	28	27	26	25	24	23	22	21	20	19	18	17	16
RGUF[31:16]															
r															

15	14	13	12	11	10	9	8	7	6	5	4	3	2	1	0
RGUF[15:0]															
r															

Bits	Fields	Descriptions
31:0	RGUF[31:0]	Received good unicast frames counter bits These bits count the number of good unicast frames received.

43.4.34. PTP time stamp control register (ENET_PTP_TSCTL)

Address offset: 0x0700
Reset value: 0x0000 2000

This register can be accessed by byte (8-bit), half-word(16-bit) or word (32-bit).

This register configures the generation and updating for timestamp.

31	30	29	28	27	26	25	24	23	22	21	20	19	18	17	16
Reserved													MAFEN	CKNT[1:0]	
													rw	rw	

15	14	13	12	11	10	9	8	7	6	5	4	3	2	1	0
MNMSEN	ETMSEN	IP4SEN	IP6SEN	ESEN	PFSV	SCROM	ARFSEN	Reserved		TMSARU	TMSITEN	TMSSTU	TMSSTI	TMSFCU	TMSEN
rw	rw	rw	rw	rw	rw	rw	rw			rw	rw	rw	rw	rw	rw

Bits	Fields	Descriptions
31:19	Reserved	Must be kept at reset value.
18	MAFEN	MAC address filter enable for PTP frame 0: No effect

		1: Enable MAC address1-3 to filter the PTP frame when received frame's type field is 0x88f7
17:16	CKNT[1:0]	Clock node type for time stamp 0x0: Type of ordinary clock 0x1: Type of boundary clock 0x2: Type of end-to-end transparent clock 0x3: Type of peer-to-peer transparent clock
15	MNMSEN	Received master node message snapshot enable This bit is valid only when CKNT=0x0 or 0x1. 0: Snapshot is only taken for slave node message 1: Snapshot is only take for master node message
14	ETMSEN	Received event type message snapshot enable 0: All type messages are taken snapshot except Announce, Management and Signaling message 1: Only event type messages (SYNC, DELAY_REQ, PDELAY_REQ and PDELAY_RESP) are taken snapshot
13	IP4SEN	Received IPv4 snapshot enable 0: Do not take snapshot for IPv4 frame 1: Take snapshot for IPv4 frame
12	IP6SEN	Received IPv6 snapshot enable 0: Do not take snapshot for IPv6 frame 1: Take snapshot for IPv6 frame
11	ESEN	Received Ethernet snapshot enable 0: Do not take snapshot when received non type frame 1: Take snapshot when received non type frame
10	PFSV	PTP frame snooping version 0: Version 1 (Revision of IEEE STD. 1588-2002 / 1588-2008) 1: Version 2 (Revision of IEEE STD. 1588-2008)
9	SCROM	Subsecond counter rollover mode 0: Binary rollover mode. Subsecond rollovers when reach 0x7FFF_FFFF 1: Digital rollover mode. Subsecond rollovers when reach 0x3B9A_C9FF (0d999_999_999)
8	ARFSEN	All received frames snapshot enable 0: Not all received frames are taken snapshot 1: All received frames are taken snapshot
7:6	Reserved	Must be kept at reset value.
5	TMSARU	Time stamp addend register update bit 0: The value of ENET_PTP_TSADDEND register is not updated to the PTP block

		for fine correction 1: The value of ENET_PTP_TSADDEND register is updated to the PTP block for fine correction **Note**: Before user set it, the TMSARU bit must be read as 0. When update is finish, the TMSARU bit is cleared.
4	TMSITEN	Timestamp interrupt trigger enable bit 0: Disable timestamp interrupt 1: When the system time is no less than the value in ENET_PTP_ETH and ENET_PTP_ETL registers, a timestamp interrupt is generated. **Note**: After the timestamp trigger interrupt happened the TMSITEN bit is cleared.
3	TMSSTU	Timestamp system time update bit Both the TMSSTU and TMSSTI bits must be read as zero before application set this bit. 0: Not update the system time 1: Update the system time with the value in the ENET_PTP_TSUH and ENET_PTP_TSUL registers. It is cleared by hardware when the update finished.
2	TMSSTI	Timestamp system time initialize bit This bit must be read as 0 before application set it. 0: The system time is maintained without any change 1: Initializing the system time with the value in ENET_PTP_TSUH and ENET_PTP_TSUL registers. It is cleared by hardware when the initialization finished.
1	TMSFCU	Timestamp fine or coarse update bit 0: The system timestamp uses the coarse method for updating 1:The system timestamp uses the fine method for updating
0	TMSEN	Timestamp enable bit 0: Disable timestamp function 1: Enable timestamp function for transmit and receive frames **Note:** After setting this to 1, application must initialize the system time.

Table 43-8. Supported time stamp snapshot with PTP register configuration

CKNT (Bit 17:16)	**0X**			**10**		**11**	
MNMSEN (Bit 15)	X(*)	1	0	X			
ETMSEN (Bit 14)	0	1	1	0	1	0	1
Supported message	SYNC FOLLOW_UP	DELAY_REQ	SYNC	SYNC FOLLOW_UP	SYNC FOLLOW_UP	SYNC FOLLOW_UP DELAY_REQ	SYNC PDELAY_REQ

type for snapshot	DELAY_REQ DELAY_RESP			DELAY_REQ DELAY_RESP		DELAY_RESP PDELAY_REQ PDELAY_RESP	PDELAY_RESP

*: means do not care

43.4.35. PTP subsecond increment register (ENET_PTP_SSINC)

Address offset: 0x0704
Reset value: 0x0000 0000

This register can be accessed by byte (8-bit), half-word(16-bit) or word (32-bit).

This register configures the 8-bit value for the incrementing subsecond register. In coarse mode, this value is added to the system time every HCLK clock cycle. In fine mode, this value is added to the system time when the accumulator reaches overflow.

31	30	29	28	27	26	25	24	23	22	21	20	19	18	17	16
Reserved															

15	14	13	12	11	10	9	8	7	6	5	4	3	2	1	0
Reserved								STMSSI[7:0]							
											rw				

Bits	Fields	Descriptions
31:8	Reserved	Must be kept at reset value.
7:0	STMSSI[7:0]	System time subsecond increment bits In every update operation, these bits are added to the subsecond value of system time.

43.4.36. PTP time stamp high register (ENET_PTP_TSH)

Address offset: 0x0708
Reset value: 0x0000 0000

This register can be accessed by byte (8-bit), half-word(16-bit) or word (32-bit).

31	30	29	28	27	26	25	24	23	22	21	20	19	18	17	16
STMS[31:16]															
r															

15	14	13	12	11	10	9	8	7	6	5	4	3	2	1	0
STMS[15:0]															
r															

Bits	Fields	Descriptions
31:0	STMS[31:0]	System time second bits

These bits show the current second of the system time.

43.4.37. PTP time stamp low register (ENET_PTP_TSL)

Address offset: 0x070C

Reset value: 0x0000 0000

This register can be accessed by byte (8-bit), half-word(16-bit) or word (32-bit).

31	30	29	28	27	26	25	24	23	22	21	20	19	18	17	16
STS	STMSS[30:16]														
r								r							

15	14	13	12	11	10	9	8	7	6	5	4	3	2	1	0
STMSS[15:0]															
r															

Bits	Fields	Descriptions
31	STS	System time sign bit 0: Time value is positive 1: Time value is negative
30:0	STMSS[30:0]	System time subseconds bits These bits show the current subsecond of the system time with 0.46 ns accuracy

43.4.38. PTP time stamp update high register (ENET_PTP_TSUH)

Address offset: 0x0710

Reset value: 0x0000 0000

This register can be accessed by byte (8-bit), half-word(16-bit) or word (32-bit).

This register configures the high 32-bit of the time to be written to, added to, or subtracted from the system time value. The timestamp update registers (high and low) initialize or update the system time maintained by the MAC core. Application must write both of these registers before setting the TMSSTI or TMSSTU bits in the timestamp control register.

31	30	29	28	27	26	25	24	23	22	21	20	19	18	17	16
TMSUS[31:16]															
rw															

15	14	13	12	11	10	9	8	7	6	5	4	3	2	1	0
TMSUS[15:0]															
rw															

Bits	Fields	Descriptions
31:0	TMSUS[31:0]	Time stamp update second bits These bits are used for initializing or adding / subtracting to second of the system

time.

43.4.39. PTP time stamp update low register (ENET_PTP_TSUL)

Address offset: 0x0714

Reset value: 0x0000 0000

This register can be accessed by byte (8-bit), half-word(16-bit) or word (32-bit).

31	30	29	28	27	26	25	24	23	22	21	20	19	18	17	16
TMSUPNS	TMSUSS[30:16]														
rw	rw														

15	14	13	12	11	10	9	8	7	6	5	4	3	2	1	0
TMSUSS[15:0]															
rw															

Bits	Fields	Descriptions
31	TMSUPNS	Timestamp update positive or negative sign bit When TMSSTI is set, this bit must be 0. 0: Timestamp update value is added to system time 1: Timestamp update value is subtracted from system time
30:0	TMSUSS[30:0]	Timestamp update subsecond bits These bits are used for initializing or adding / subtracting to subsecond of the system time.

43.4.40. PTP time stamp addend register (ENET_PTP_TSADDEND)

Address offset: 0x0718

Reset value: 0x0000 0000

This register can be accessed by byte (8-bit), half-word(16-bit) or word (32-bit).

This register value is used only in fine update mode for adjusting the clock frequency. This register value is added to a 32-bit accumulator in every clock cycle and the system time updates when the accumulator reaches overflow.

31	30	29	28	27	26	25	24	23	22	21	20	19	18	17	16
TMSA[31:16]															
rw															

15	14	13	12	11	10	9	8	7	6	5	4	3	2	1	0
TMSA[15:0]															
rw															

Bits	Fields	Descriptions
31:0	TMSA[31:0]	Time stamp addend bits

In order to achieve time synchronization, the value of TMSA[31:0] is added to the accumulator register.

43.4.41. PTP expected time high register (ENET_PTP_ETH)

Address offset: 0x071C

Reset value: 0x0000 0000

This register can be accessed by byte (8-bit), half-word(16-bit) or word (32-bit).

31	30	29	28	27	26	25	24	23	22	21	20	19	18	17	16
ETSH[31:16]															
rw															

15	14	13	12	11	10	9	8	7	6	5	4	3	2	1	0
ETSH[15:0]															
rw															

Bits	Fields	Descriptions
31:0	ETSH[31:0]	Expected time high bits These bits store the expected target second time.

43.4.42. PTP expected time low register (ENET_PTP_ETL)

Address offset: 0x0720

Reset value: 0x0000 0000

This register can be accessed by byte (8-bit), half-word(16-bit) or word (32-bit).

31	30	29	28	27	26	25	24	23	22	21	20	19	18	17	16
ETSL[31:16]															
rw															

15	14	13	12	11	10	9	8	7	6	5	4	3	2	1	0
ETSL[15:0]															
rw															

Bits	Fields	Descriptions
31:0	ETSL[31:0]	Expected time low bits These bits store the expected target nanosecond time (signed).

43.4.43. PTP time stamp flag register (ENET_PTP_TSF)

Address offset: 0x0728

Reset value: 0x0000 0000

This register can be accessed by byte (8-bit), half-word(16-bit) or word (32-bit).

31	30	29	28	27	26	25	24	23	22	21	20	19	18	17	16
Reserved															

15	14	13	12	11	10	9	8	7	6	5	4	3	2	1	0
Reserved														TTM	TSSCO
														ro	ro

Bits	Fields	Descriptions
31:2	Reserved	Must be kept at reset value.
1	TTM	Target time match bit 0: System time is not equal or greater than expected time. 1: System time is equal or greater than expected time **Note:** Reading ENET_PTP_TSF register will clear this bit.
0	TSSCO	Timestamp second counter overflow bit 0: Timestamp second counter has not overflowed 1: Timestamp second counter is greater than 0xFFFF FFFF

43.4.44. PTP PPS control register (ENET_PTP_PPSCTL)

Address offset: 0x072C

Reset value: 0x0000 0000

This register can be accessed by byte (8-bit), half-word(16-bit) or word (32-bit).

31	30	29	28	27	26	25	24	23	22	21	20	19	18	17	16
Reserved															

15	14	13	12	11	10	9	8	7	6	5	4	3	2	1	0
Reserved												PPSOFC[3:0]			
												rw			

Bits	Fields	Descriptions
31:4	Reserved	Must be kept at reset value.
3:0	PPSOFC	PPS output frequency configure 0x0: 1Hz (Pulse width: 125ms for binary rollover, 100ms for digital rollover) 0x1: 2Hz (Pulse width: 50% duty cycle for binary rollover) 0x2: 4Hz (Pulse width: 50% duty cycle for binary rollover) …. 0xF: 32768 (2^{15}) Hz (Pulse width: 50% duty cycle for binary rollover) **Note:** If digital rollover is selected, only PPSOFC=0 is recommended.

43.4.45. DMA bus control register (ENET_DMA_BCTL)

Address offset: 0x1000

Reset value: 0x0002 0101

This register can be accessed by byte (8-bit), half-word(16-bit) or word (32-bit).

31	30	29	28	27	26	25	24	23	22	21	20	19	18	17	16
Reserved					MB	AA	FPBL	UIP	RXDP[5:0]						FB
					rw	rw	rw	rw	rw						rw

15	14	13	12	11	10	9	8	7	6	5	4	3	2	1	0
RTPR[1:0]		PGBL[5:0]						DFM	DPSL[4:0]					DAB	SWR
rw		rw						rw	rw					rw	rs

Bits	Fields	Descriptions
31:27	Reserved	Must be kept at reset value.
26	MB	Mixed burst 0: AHB master interface only transfer fixed burst length with 16 and below 1: AHB master interface will transfer burst length greater than 16 with INCR **Note:** MB and FB should be and must be only one of bit is set.
25	AA	Address-aligned bit 0: Disable address-aligned 1: Enabled address-aligned. If the FB=1, all AHB interface address is aligned to the start address LS bits (bit 1 to 0). If the FB=0, the AHB interface first access address (accessing the data buffer's start address) is not aligned, but subsequent burst access addresses are aligned to the address.
24	FPBL	Four times PGBL mode bit 0: The PGBL value programmed (bits[22:17] and bits[13:8]) for the DMA data number of beats to be transferred 1: Multiple the PGBL value programmed (bits[22:17] and bits[13:8]) four times for the DMA data number of beats to be transferred
23	UIP	Use independent PGBL bit 0: The PGBL value in bits[13:8] is applicable for both TxDMA and RxDMA engines 1: The RxDMA uses the RXDP[5:0] bits as burst length while the PGBL[5:0] is used by TxDMA
22:17	RXDP[5:0]	RxDMA PGBL bits If UIP=0, these bits are not valid. Only when UIP=1, these bits is configured for the maximum number of beats to be transferred in one RxDMA transaction. 0x01: max beat number is 1 0x02: max beat number is 2 0x04: max beat number is 4 0x08: max beat number is 8

		0x10: max beat number is 16 0x20: max beat number is 32 Other: Reserved
16	FB	Fixed burst bit 0: Both SINGLE and INCR burst transfer operations can be used by AHB 1: Only SINGLE, INCR4, INCR8 or INCR16 can be used by AHB, while in the start of normal burst transfer. **Note:** MB and FB should be and must be only one of bit is set.
15:14	RTPR[1:0]	RxDMA and TxDMA transfer priority ratio bits These bits indicate the access ratio between RxDMA and TxDMA. 0x0: RxDMA : TxDMA = 1:1 0x1: RxDMA : TxDMA = 2:1 0x2: RxDMA : TxDMA = 3:1 0x3: RxDMA : TxDMA = 4:1 **Note:** This bit is valid only when the arbitration mode is Round-robin (DAB=0).
13:8	PGBL[5:0]	Programmable burst length bits These bits indicate the maximum number of beats to be transferred in one DMA transaction. When UIP=1, the PGBL value is only used for TxDMA. When UIP=0, the PGBL value is used for both TxDMA and RxDMA. 0x01: max beat number is 1 0x02: max beat number is 2 0x04: max beat number is 4 0x08: max beat number is 8 0x10: max beat number is 16 0x20: max beat number is 32 Other: Reserved.
7	DFM	Descriptor format mode 0: Normal mode descriptor 1: Enhanced mode descriptor
6:2	DPSL[4:0]	Descriptor skip length bit These bits are valid only between two ring mode descriptors. They define the number of words (32-bit) to skip between two ring descriptors. DPSL[4:0] represents the address difference from the end of the current descriptor to the beginning of the next descriptor. If the value of DPSL[4:0] is 0, the DMA taking the descriptor table as contiguous.
1	DAB	DMA arbitration bit This bit indicates the arbitration mode between RxDMA and TxDMA. 0: Round-robin mode and DMA access priority is given in RTPR 1: Fixed mode. RxDMA has higher priority than TxDMA
0	SWR	Software reset bit

This bit can reset all core internal registers located in CLK_TX and CLK_RX.

It is cleared by hardware when the reset operation is complete in all clock domains.

Note: Application must make sure this bit is 0 before writing any MAC core registers.

0: Core and inner register are not in reset state

1: Reset all core internal registers

43.4.46. DMA transmit poll enable register (ENET_DMA_TPEN)

Address offset: 0x1004

Reset value: 0x0000 0000

This register can be accessed by byte (8-bit), half-word(16-bit) or word (32-bit).

This register is used by the application to make the TxDMA controller poll the transmit descriptor table. The TxDMA controller can go into suspend state because of an underflow error in a transmitted frame or the descriptor unavailable (DAV=0). Application can write any value into this register for attempting to re-fetch the current descriptor.

31	30	29	28	27	26	25	24	23	22	21	20	19	18	17	16
TPE[31:16]															
rw_wt															

15	14	13	12	11	10	9	8	7	6	5	4	3	2	1	0
TPE[15:0]															
rw_wt															

Bits	Fields	Descriptions
31:0	TPE[31:0]	Transmit poll enable bits Writing to this register with any value makes DMA read the current descriptor address which is indicated in ENET_DMA_CTDADDR register. If the fetched current descriptor is available (DAV=1), DMA exits suspend state and resumes working. If the fetched current descriptor is unavailable (DAV=0), the DMA returns to suspend state again and the TBU bit in ENET_DMA_STAT register will be set.

43.4.47. DMA receive poll enable register (ENET_DMA_RPEN)

Address offset: 0x1008

Reset value: 0x0000 0000

This register can be accessed by byte (8-bit), half-word(16-bit) or word (32-bit).

This register is used by the application to make the RxDMA controller poll the receive descriptor table. Writing to this register makes the RxDMA controller exit suspend state.

31	30	29	28	27	26	25	24	23	22	21	20	19	18	17	16
RPE[31:16]															
rw_wt															

15	14	13	12	11	10	9	8	7	6	5	4	3	2	1	0
RPE[15:0]															
rw_wt															

Bits	Fields	Descriptions
31:0	RPE[31:0]	Receive poll enable bits Writing to this register with any value makes DMA read the current descriptor address which is indicated in ENET_DMA_CRDADDR register. If the fetched current descriptor is available (DAV=1), DMA exits suspend state and resumes working. If the fetched current descriptor is unavailable (DAV=0), the DMA returns to suspend state again and the RBU bit in ENET_DMA_STAT register will be set.

43.4.48. DMA receive descriptor table address register (ENET_DMA_RDTADDR)

Address offset: 0x100C

Reset value: 0x0000 0000

This register can be accessed by byte (8-bit), half-word(16-bit) or word (32-bit).

This register points to the start of the receive descriptor table. The descriptor table is located in the physical memory space and must be word-aligned. This register can only be written when RxDMA controller is in stop state. Before starting RxDMA reception process, this register must be configured correctly.

31	30	29	28	27	26	25	24	23	22	21	20	19	18	17	16
SRT[31:16]															
rw															

15	14	13	12	11	10	9	8	7	6	5	4	3	2	1	0
SRT[15:0]															
rw															

Bits	Fields	Descriptions
31:0	SRT[31:0]	Start address of receive table bits These bits indicate the start address of the receive descriptor table. SRT[1:0] are internally taken as zero so SRT[1:0] are read only.

43.4.49. DMA transmit descriptor table address register (ENET_DMA_TDTADDR)

Address offset: 0x1010

Reset value: 0x0000 0000

This register can be accessed by byte (8-bit), half-word(16-bit) or word (32-bit).

This register points to the start of the transmit descriptor table. The descriptor table is located in the physical memory space and must be word-aligned. This register can only be written when TxDMA controller is in stop state. Before starting TxDMA transmission process, this

register must be configured correctly.

31	30	29	28	27	26	25	24	23	22	21	20	19	18	17	16
STT[31:16]															
rw															

15	14	13	12	11	10	9	8	7	6	5	4	3	2	1	0
STT[15:0]															
rw															

Bits	Fields	Descriptions
31:0	STT[31:0]	Start address of transmit table bits These bits indicate the start address of the transmit descriptor table. STT[1:0] are internally taken as zero so STT[1:0] are read only.

43.4.50. DMA status register (ENET_DMA_STAT)

Address offset: 0x1014
Reset value: 0x0000 0000

This register can be accessed by byte (8-bit), half-word(16-bit) or word (32-bit).

This register contains all the status bits that the DMA controller recorded. Writing 1 to meaningful bits in this register clears them but writing 0 has no effect. Each bit (bits[16:0]) can be masked by masking the corresponding bit in the ENET_DMA_INTEN register.

31	30	29	28	27	26	25	24	23	22	21	20	19	18	17	16
Reserved		TST	WUM	MSC	Reserved	EB[2:0]			TP[2:0]			RP[2:0]			NI
		r	r	r			r			r			r		rc_w1

15	14	13	12	11	10	9	8	7	6	5	4	3	2	1	0
AI	ER	FBE	Reserved		ET	RWT	RPS	RBU	RS	TU	RO	TJT	TBU	TPS	TS
rc_w1	rc_w1	rc_w1			rc_w1	rc_w1	rc_w1	rc_w1	rc_w1	rc_w1	rc_w1	rc_w1	rc_w1	rc_w1	rc_w1

Bits	Fields	Descriptions
31:30	Reserved	Must be kept at reset value.
29	TST	Timestamp trigger status bit This bit indicates a timestamp event occurred. It is cleared by application through clearing TMST bit. If the corresponding interrupt mask bit is reset, an interrupt is generated. 0: Timestamp event has not occurred 1: Timestamp event has occurred
28	WUM	WUM status bit This bit indicates a WUM event occurred. It is cleared when both two source event status bits are cleared. If the corresponding interrupt mask bit is reset, an interrupt is generated.

		0: WUM event has not occurred 1: WUM event has occurred
27	MSC	MSC status bit This bit indicates a MSC event occurred. It is cleared when all of event sources are cleared. If the corresponding interrupt mask bit is reset, an interrupt is generated. 0: MSC event has not occurred 1: MSC event has occurred
26	Reserved	Must be kept at reset value.
25:23	EB[2:0]	Error bits status bit When FBE=1, these bits decode the type of error that caused a bus response error on AHB bus. EB[0]: 1: Error occurs while TxDMA transfer data 0: Error occurs while RxDMA transfer data EB[1]: 1: Error occurs while read transfer 0: Error occurs while write transfer EB[2]: 1: Error occurs while access descriptor 0: Error occurs while access data buffer
22:20	TP[2:0]	Transmit process state bit These bits decode the TxDMA state. 0x0: Stopped; Issuing transmit command which is Reset or Stop. 0x1: Running; Fetching the transfer descriptor that belongs to transmit. 0x2: Running; Waiting for status 0x3: Running; Queuing it to TxFIFO after reading transmit packet data from host memory buffer. 0x4, 0x5: Reserved 0x6: Suspended; Unavailable of transmit descriptor or underflow of transmit buffer. 0x7: Running; Closing the descriptor that belongs to transmit.
19:17	RP[2:0]	Receive process state bit These bits decode the RxDMA state. 0x0: Stopped; Issuing receive command which is Reset or Stop. 0x1: Running; Fetching the transfer descriptor that belongs to receive. 0x2: Reserved 0x3: Running; Waiting for the packet that belongs to receive. 0x4: Suspended: Unavailable of receive descriptor 0x5: Running: Closing the descriptor that belongs to receive. 0x6: Reserved 0x7: Running; Transferring it to host memory after reading the receive packet data

		from RxFIFO.
16	NI	Normal interrupt summary The NI bit is logical ORed of the following if the corresponding interrupt bit is enabled in the ENET_DMA_INTEN register: TS: Interrupt of transmit TBU: Unavailable of transmit buffer RS: Interrupt of receive ER: Interrupt of early receive **Note:** Each time when this bit is set, application must cleared its source bit by writing 1 to that bit.
15	AI	Abnormal interrupt summary bit The AI bit is logical ORed of the following if the corresponding interrupt bit is enabled in the ENET_DMA_INTEN register: TPS: Halt of transmit process TJT: Timeout of transmit jabber RO: Overflow of receive FIFO TU: Underflow transmit RBU: Receive buffer RPS: Unavailable of receive process stopped RWT: Timeout of receive watchdog ET: Interrupt of early transmit FBE: Error of fatal bus error **Note:** Each time when this bit is set, application must cleared its source bit by writing 1 to that bit.
14	ER	Early receive status bit This bit is automatically cleared when the RS bit is set. 0: The first buffer has not been filled 1: The first buffer has filled with received frame
13	FBE	Fatal bus error status bit This bit indicates a response error on AHB interface is occurred and the error type can be decoded by EB[2:0] bits. 0: Bus error has not occurred 1: A bus error occurred and the corresponding DMA stops all operations
12:11	Reserved	Must be kept at reset value.
10	ET	Early transmit status bit 0: The frame to be transmitted has not fully transferred into the TxFIFO 1: The frame to be transmitted has fully transferred into the TxFIFO
9	RWT	Receive watchdog timeout status bit 0: No received a frame with a length greater than 2048 bytes 1: A frame with a length greater than 2048 bytes is received

8	RPS	Receive process stopped status bit 0: The receive process is not in stop state 1: The receive process is in stop state
7	RBU	Receive buffer unavailable status bit 0: The DAV bit in fetched next receive descriptor is set 1: The DAV bit in fetched next receive descriptor is reset and RxDMA enters suspend state
6	RS	Receive status bit 0: Frame reception has not completed 1: Frame reception has completed
5	TU	Transmit underflow status bit 0: Underflow error has not occurred during frame transmission 1: The TxFIFO encountered an underflow error during frame transmission and entered suspend state
4	RO	Receive overflow status bit 0: Receive overflow error has not occurred during frame reception 1: The RxFIFO encountered an overflow error during frame reception. If a part of frame data has transferred to the memory, the overflow status in OERR bit is also set.
3	TJT	Transmit jabber timeout status bit 0: Transmit jabber timeout has not occurred during frame transmission 1: The transmit jabber timer expired. The TxDMA controller cancels the current transmission and enters stop state. This also causes JT bit in Transmit Descriptor0 set.
2	TBU	Transmit buffer unavailable status bit 0: The DAV bit in fetched next transmit descriptor is set 1: The DAV bit in fetched next transmit descriptor is reset and TxDMA enters suspend state
1	TPS	Transmit process stopped status bit 0: The transmission is not in stop state 1: The transmission is in stop state
0	TS	Transmit status bit This bit can only be set when both LSG and INTC are set in Transmit Descriptor0. 0: Current frame transmission is not finished 1: Current frame transmission is finished.

43.4.51. DMA control register (ENET_DMA_CTL)

Address offset: 0x1018

Reset value: 0x0000 0000

This register can be accessed by byte (8-bit), half-word(16-bit) or word (32-bit).

This register configures both the transmitting and receiving operation modes and commands. This register should be written at last during the process of DMA initialization.

31	30	29	28	27	26	25	24	23	22	21	20	19	18	17	16
Reserved					DTCERFD	RSFD	DAFRF	Reserved		TSFD	FTF	Reserved			TTHC[2]
					rw	rw	rw			rw	rs				rw

15	14	13	12	11	10	9	8	7	6	5	4	3	2	1	0
TTHC[1:0]		STE	Reserved					FERF	FUF	Reserved	RTHC[1:0]		OSF	SRE	Reserved
rw		rw						rw	rw		rw		rw	rw	

Bits	Fields	Descriptions
31:27	Reserved	Must be kept at reset value.
26	DTCERFD	Dropping of TCP / IP checksum error frames disable bit 0: All error frames will be dropped when FERF=0 1: The received frame with only payload error but no other errors will not be dropped.
25	RSFD	Receive Store-and-Forward bit 0: The RxFIFO operates in Cut-Through mode. The forwarding threshold depends on the RTHC bits 1: The RxFIFO operates in Store-and-Forward mode. The RTHC bits are don't care and the frame forwarding starts after the whole frame has pushed into RxFIFO.
24	DAFRF	Disable flushing of received frames bit 0: The RxDMA flushes all frames because of unavailable receive descriptor 1: The RxDMA does not flush any frames even though receive descriptor is unavailable
23:22	Reserved	Must be kept at reset value.
21	TSFD	Transmit Store-and-Forward bit 0: The TxFIFO operates in Cut-Through mode. The TTHC bits in ENET_DMA_CTL register defines the start popping time from TxFIFO. 1: The TxFIFO operates in Store-and-Forward mode. Transmission on interface starts after the full frame has been pushed into the TxFIFO. The TTHC bits are don't care in this mode. **Note:** This bit can be changed when transmission is in stop state.
20	FTF	Flush transmit FIFO bit This bit can be set by application to reset TxFIFO inner control register and logic. If set, all data in TxFIFO are flushed. It is cleared by hardware after the flushing operation is finish. **Note:** Before this bit is reset, this register (ENET_DMA_CTL) must not be written.
19:17	Reserved	Must be kept at reset value.

16:14	TTHC[2:0]	Transmit threshold control bit These bits control the start transmitting byte threshold of the TxFIFO. When TSFD=1, these bits are ignored. 0x0: 64 0x1: 128 0x2: 192 0x3: 256 0x4: 40 0x5: 32 0x6: 24 0x7: 16
13	STE	Start / stop transmission enable bit 0: The TxDMA controller will enter stop state after transmitting complete if the current frame is being transmitted. After complete transmitting, the next descriptor address will become current descriptor address for the address pointer. If the TxDMA controller is in suspend state, reset this bit make the controller entering stop state. 1: The TxDMA controller will enter running state. TxDMA controller fetches current descriptor address for frame transmitting. Transmit descriptor's fetching can either from base address in ENET_DMA_TDTADDR register or from the pointer position when transmission was stopped previously. If the DAV bit of current descriptor is reset, TxDMA controller enters suspend state and the TBU bit will be set. This bit should be set after all other DMA registers have been configured otherwise the action of TxDMA is unpredictable.
12:8	Reserved	Must be kept at reset value.
7	FERF	Forward error frames bit 0: When RxFIFO is in Cut-Through mode (RSFD=0), if frame error (CRC error, collision error, checksum error, watchdog timeout, overflow error) is detected before popping RxFIFO data to memory, RxFIFO drops this error frame. But if frame error is detected after popping RxFIFO data to memory, RxFIFO will not drop this frame data. When RxFIFO is in Store-and-Forward mode, once frame error is detected during reception the RxFIFO drops this frame. 1: All frame received with error except runt error are forwarded to memory
6	FUF	Forward undersized good frames bit 0: The RxFIFO drops all frames whose length is less than 64 bytes. However, if this frame has already started forwarding (may due to lower value of receive threshold in Cut-Through mode), the whole frame will be forwarded. 1: The RxFIFO forwards received frame whose frame length is less than 64 bytes but without any other error
5	Reserved	Must be kept at reset value.
4:3	RTHC[1:0]	Receive threshold control bit

		These bits control the threshold bytes of the RxFIFO. **Note:** These bits are valid only when the RSFD=0 and are ignored when the RSFD=1. 0x0: 64 0x1: 32 0x2: 96 0x3: 128
2	OSF	Operate on second frame bit 0: The TxDMA controller process the second transmit frame after the status of the first frame is written back to descriptor 1: The TxDMA controller process the second transmit frame after pushed all first frame data into TxFIFO but before the status of the first frame is written back to descriptor
1	SRE	Start / stop receive enable bit 0: The RxDMA controller will enter stop state after transfer complete if current received frame is transmitting to memory by RxDMA. After transfer complete, the next descriptor address in the receive table will become the current descriptor address when restart the RxDMA controller. Only RxDMA controller is in running state or suspend state, this bit can be reset by application. 1: The RxDMA controller will enter running state. RxDMA controller fetches receive descriptor from receive descriptor table for receiving frames. The descriptor address can either from current address in the ENET_DMA_RDTADDR register or the address after previous frame stopped by application. If the DAV bit in fetched descriptor is reset, RxDMA controller will enter suspend state and RBU bit will be set. Setting this bit can only when RxDMA controller is in stop state or suspend state. This bit should be set after all other DMA registers have been configured otherwise the action of RxDMA is unpredictable.
0	Reserved	Must be kept at reset value.

43.4.52. DMA interrupt enable register (ENET_DMA_INTEN)

Address offset: 0x101C

Reset value: 0x0000 0000

This register can be accessed by byte (8-bit), half-word(16-bit) or word (32-bit).

This register configures the interrupts which are reflected in ENET_DMA_STAT register.

31	30	29	28	27	26	25	24	23	22	21	20	19	18	17	16
Reserved															NIE
															rw
15	14	13	12	11	10	9	8	7	6	5	4	3	2	1	0
AIE	ERIE	FBEIE	Reserved		ETIE	RWTIE	RPSIE	RBUIE	RIE	TUIE	ROIE	TJTIE	TBUIE	TPSIE	TIE

rw rw rw rw rw rw rw rw rw rw rw rw rw rw rw

Bits	Fields	Descriptions
31:17	Reserved	Must be kept at reset value.
16	NIE	Normal interrupt summary enable bit 0: Disable normal interrupt 1: Enable normal interrupt This bit enables the following bits: TS: Interrupt of transmit TBU: Unavailable transmit buffer RS: Interrupt of receive ER: Interrupt of Early receive
15	AIE	Abnormal interrupt summary enable bit 0: Disable abnormal interrupt 1: Enable abnormal interrupt This bit enables the following bits: TPS: Halt of transmit process TJT: Timeout of transmit jabber RO: Overflow of receive FIFO TU: Underflow transmit RBU: Receive buffer RPS: Unavailable of receive process stopped RWT: Timeout of receive watchdog ET: Interrupt of early transmit FBE: Error of fatal bus error
14	ERIE	Early receive interrupt enable bit 0: Disable early receive interrupt 1: Enable early receive interrupt
13	FBEIE	Fatal bus error interrupt enable bit 0: Disable fatal bus error interrupt 1: Enable fatal bus error interrupt
12:11	Reserved	Must be kept at reset value.
10	ETIE	Early transmit interrupt enable bit 0: Disable early transmit interrupt 1: Enable early transmit interrupt
9	RWTIE	Receive watchdog timeout interrupt enable bit 0: Disable receive watchdog timeout interrupt 1: Enable receive watchdog timeout interrupt
8	RPSIE	Receive process stopped interrupt enable bit

		0: Disable receive stopped interrupt 1: Enable receive stopped interrupt
7	RBUIE	Receive buffer unavailable interrupt enable bit 0: Disable receive buffer unavailable interrupt 1: Enable receive buffer unavailable interrupt
6	RIE	Receive interrupt enable bit 0: Disable receive interrupt 1: Enable receive interrupt
5	TUIE	Transmit underflow interrupt enable bit 0: Disable underflow interrupt 1: Enable underflow interrupt
4	ROIE	Receive overflow interrupt enable bit 0: Disable overflow interrupt 1: Enable overflow interrupt
3	TJTIE	Transmit jabber timeout interrupt enable bit 0: Disable transmit jabber timeout interrupt 1: Enable transmit jabber timeout interrupt
2	TBUIE	Transmit buffer unavailable interrupt enable bit 0: Disable transmit buffer unavailable interrupt 1: Enable transmit buffer unavailable interrupt
1	TPSIE	Transmit process stopped interrupt enable bit 0: Disable transmission stopped interrupt 1: Enable transmission stopped interrupt
0	TIE	Transmit interrupt enable bit 0: Disable transmit interrupt 1: Enable transmit interrupt

43.4.53. DMA missed frame and buffer overflow counter register (ENET_DMA_MFBOCNT)

Address offset: 0x1020
Reset value: 0x0000 0000

This register can be accessed by byte (8-bit), half-word(16-bit) or word (32-bit).

There are two counters designed in DMA controller for tracking the number of missed frames during receiving. The counter value can be read from this register for debug purpose.

31	30	29	28	27	26	25	24	23	22	21	20	19	18	17	16
Reserved				MSFA[10:0]											Reserved

rc_r

15	14	13	12	11	10	9	8	7	6	5	4	3	2	1	0
MSFC[15:0]															

rc_r

Bits	Fields	Descriptions
31:28	Reserved	Must be kept at reset value.
27:17	MSFA[10:0]	Missed frames by the application bits These bits indicate the number of frames dropped by RxFIFO.
16	Reserved	Must be kept at reset value.
15:0	MSFC[15:0]	Missed frames by the controller bits These bits indicate the number of frames missed by the RxDMA controller because of the unavailable receive buffer. Each time the RxDMA controller flushes one frame, this counter will plus 1.

43.4.54. DMA receive state watchdog counter register (ENET_DMA_RSWDC)

Address offset: 0x1024

Reset value: 0x0000 0000

This register can be accessed by byte (8-bit), half-word(16-bit) or word (32-bit).

The watchdog counter value register for RS bit (ENET_DMA_STAT register) set after delay a configured time.

31	30	29	28	27	26	25	24	23	22	21	20	19	18	17	16
Reserved															

15	14	13	12	11	10	9	8	7	6	5	4	3	2	1	0
Reserved								WDCFRS[7:0]							

rw

Bits	Fields	Descriptions
31:8	Reserved	Must be kept at reset value.
7:0	WDCFRS[7:0]	Watchdog counter for receive status (RS) bit These bits are only valid when DINTC (RXDES1) is set. When DINTC=1 and a frame is received, the RS bit will be set delay a time of WDCFRS*256 HCLK after receiving complete.

43.4.55. DMA current transmit descriptor address register (ENET_DMA_CTDADDR)

Address offset: 0x1048
Reset value: 0x0000 0000

This register can be accessed by byte (8-bit), half-word(16-bit) or word (32-bit).

This register points to the start descriptor address of the current transmit descriptor read by the TxDMA controller.

31	30	29	28	27	26	25	24	23	22	21	20	19	18	17	16
TDAP[31:16]															
r															

15	14	13	12	11	10	9	8	7	6	5	4	3	2	1	0
TDAP[15:0]															
r															

Bits	Fields	Descriptions
31:0	TDAP[31:0]	Transmit descriptor address pointer bits These bits are automatically updated by TxDMA controller during operation.

43.4.56. DMA current receive descriptor address register (ENET_DMA_CRDADDR)

Address offset: 0x104C
Reset value: 0x0000 0000

This register can be accessed by byte (8-bit), half-word(16-bit) or word (32-bit).

This register points to the start descriptor address of the current receive descriptor read by the RxDMA controller.

31	30	29	28	27	26	25	24	23	22	21	20	19	18	17	16
RDAP[31:16]															
r															

15	14	13	12	11	10	9	8	7	6	5	4	3	2	1	0
RDAP[15:0]															
r															

Bits	Fields	Descriptions
31:0	RDAP[31:0]	Receive descriptor address pointer bits These bits are automatically updated by RxDMA controller during operation.

43.4.57. DMA current transmit buffer address register (ENET_DMA_CTBADDR)

Address offset: 0x1050

Reset value: 0x0000 0000

This register can be accessed by byte (8-bit), half-word(16-bit) or word (32-bit).

This register points to the current transmit buffer address being read by the TxDMA controller.

31	30	29	28	27	26	25	24	23	22	21	20	19	18	17	16
TBAP[31:16]															
r															

15	14	13	12	11	10	9	8	7	6	5	4	3	2	1	0
TBAP[15:0]															
r															

Bits	Fields	Descriptions
31:0	TBAP[31:0]	Transmit buffer address pointer bits These bits are automatically updated by TxDMA controller during operation.

43.4.58. DMA current receive buffer address register (ENET_DMA_CRBADDR)

Address offset: 0x1054

Reset value: 0x0000 0000

This register can be accessed by byte (8-bit), half-word(16-bit) or word (32-bit).

This register points to the current receive buffer address being read by the RxDMA controller.

31	30	29	28	27	26	25	24	23	22	21	20	19	18	17	16
RBAP[31:16]															
r															

15	14	13	12	11	10	9	8	7	6	5	4	3	2	1	0
RBAP[15:0]															
r															

Bits	Fields	Descriptions
31:0	RBAP[31:0]	Receive buffer address pointer bits These bits are automatically updated by RxDMA controller during operation.

44. Comparator (CMP)

44.1. Overview

The general purpose CMP can work either standalone (all terminal are available on I/Os) or together with the timers.

It can be used to wake up the MCU from low-power mode by an analog signal, provide a trigger source when an analog signal is in a certain condition, achieve some current control by working together with a PWM output of a timer and the DAC.

44.2. Characteristic

- Rail-to-rail comparators.
- Configurable hysteresis.
- Configurable speed and consumption.
- Configurable analog input source.
  - DAC output.
  - Multiplexed I / O pins.
  - The whole or sub-multiple values of internal reference voltage.
- Outputs with blanking source.
- Window comparator.
- Outputs to I / O.
- Outputs to timers for triggering.
- Outputs to EXTI.
- Outputs to NVIC.
- Outputs to TRIGSEL.

44.3. Function overview

The block diagram of CMP is shown below:

Figure 44-1. CMP block diagram

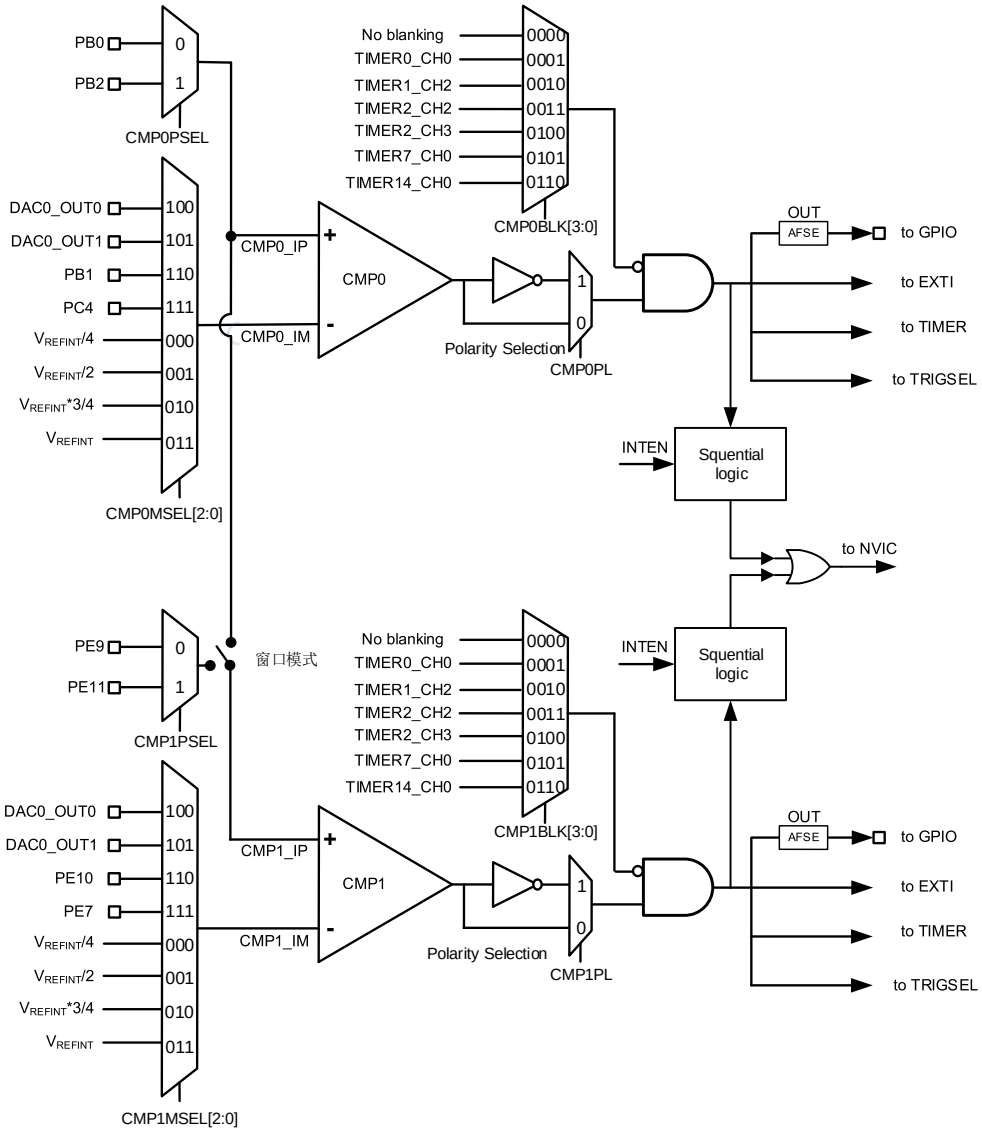

Note: V_{REFINT} is 1.2V.

44.3.1. CMP clock

The clock of the CMP which is connected to APB bus, is synchronous with PCLK.

44.3.2. CMP I/O configuration

These I / Os must be configured in analog mode in the GPIOs registers before they are selected as CMP inputs.

Considering pin definitions in datasheet, and the CMP output must be connected to corresponding alternate I / Os.

The CMP output can be redirected internally and externally simultaneously.

CMP output internally connect to the TIMER and the connections between them are as follows:

- CMP output to the TIMER input channel.
- CMP output to the TIMER break (through TRIGSEL).

In order to work even in Deep-sleep mode, the polarity selection logic and the output redirection to the port work independently from PCLK.

Table 44-1. CMP inputs and outputs summary details the inputs and outputs of the CMP.

Table 44-1. CMP inputs and outputs summary

	CMP0	CMP1
CMP non inverting inputs connected to I/Os	PB0 PB2	PE9 PE11
CMP inverting inputs connected to I/Os	PB1 PC4	PE10 PE7
CMP inverting inputs connected to internal signals	V_{REFINT}/4, V_{REFINT}/2, V_{REFINT}*3/4, V_{REFINT}, DAC0_OUT0, DAC0_OUT1	V_{REFINT}/4, V_{REFINT}/2, V_{REFINT}*3/4, V_{REFINT}, DAC0_OUT0, DAC0_OUT1
CMP outputs connected to I/Os	PC5 (AF13) PE12 (AF13)	PE8 (AF13) PE13 (AF13)
CMP outputs connected to EXTI	•	
CMP outputs connected to TRIGSEL	•	
CMP outputs connected to NVIC	•	
CMP_MUX_OUT (controlled by AFSE[x])	PA6 (AF10) PA8 (AF12) PB12 (AF11) PE6 (AF13) PE15 (AF13) PG2 (AF11) PG3 (AF11) PG4 (AF11) PK0 (AF11) PK1 (AF11) PK2 (AF10)	

44.3.3. CMP operating mode

For a given application, there is a trade-off between the CMP power consumption versus

propagation delay, which is adjusted by configuring bits CMPxM[1:0] in CMPx_CS register. The CMP works fastest with highest power consumption when CMPxM[1:0] = 2'b00, while works slowest with lowest power consumption when CMPxM [1:0]= 2'b11.

44.3.4. CMP Window mode

If the WNDEN bit in CMPx_CS register is set, comparator windows mode is enabled, input plus of comparator 1 is connected with input plus of comparator 0. If the minus input of CMP0 and CMP1 is connected to different voltage, the voltage range from lower threshold to upper threshold, is monitored by analyzing the comparator 0 and comparator 1 output.

44.3.5. CMP hysteresis

In order to avoid spurious output transitions that caused by the noise signal, a programmable hysteresis is designed to force the hysteresis value by configuring CMPx_CS register. This function could be shut down if it is unnecessary.

Figure 44-2. CMP hysteresis

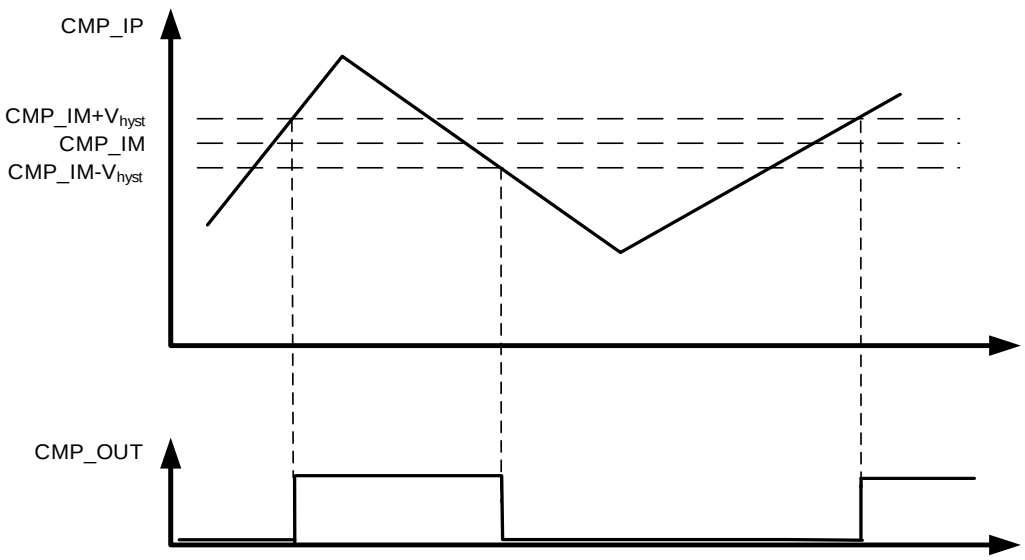

44.3.6. CMP register write protection

The CMP control and status register (CMPx_CS) and alternate select register (CMP_SR) can be protected from writing by setting CMPxLK bit to 1. The CMPx_CS register, including the CMPxLK bit will be read-only, and can only be reset by the MCU reset.

44.3.7. CMP output blanking

CMP output blanking function can be used to avoid interference of short pulses in the input signal to CMP output signal. If the CMPxBLK[2:0] bits in the CMPx_CS register are setting to

an available value, the CMP output final signal is obtained by ANDing the complementary signal of the selected blanking signal with the raw output of the comparator. The blanking function can be used for false overcurrent detection in motor control applications.

Figure 44-3. The CMP outputs signal blanking shows the comparator output blank function.

Figure 44-3. The CMP outputs signal blanking

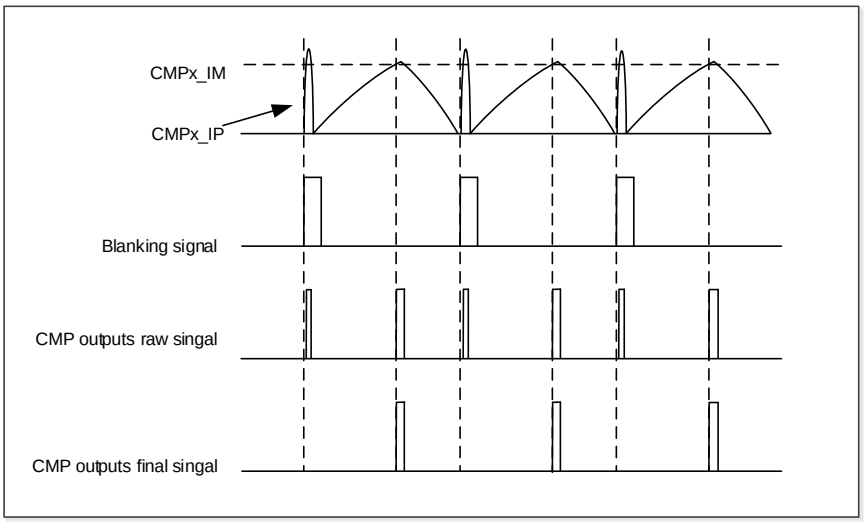

44.3.8. CMP voltage scaler function

The voltage scaler function can provide selectable 1 / 4, 1 / 2, 3 / 4 reference voltage for CMP input. It is controlled by CMPxSEN and CMPxBEN bits in CMPx control / status register. The CMPxSEN and CMPxBEN bits are used to enable the V_{REFINT} voltage output and the divider circuit, respectively, to generate the selected voltage.

44.3.9. CMP interrupt

The CMP output is connected to the EXTI and the EXTI line is exclusive to CMP. With this function, CMP can generate either interrupt or event which could be used to exit from low-power mode.

The CMP also can generate an interrupt to NVIC. It is a sequential logic signal, so the PCLK is needed.

44.4. Register definition

CMP base address: 0x5800 3800

44.4.1. CMP status register (CMP_STAT)

Address offset: 0x00

Reset value: 0x0000 0000

This register has to be accessed by word (32-bit).

31	30	29	28	27	26	25	24	23	22	21	20	19	18	17	16
Reserved														CMP1IF	CMP0IF
														r	r

15	14	13	12	11	10	9	8	7	6	5	4	3	2	1	0
Reserved														CMP1O	CMP0O
														r	r

Bits	Fields	Descriptions
31:18	Reserved	Must be kept at reset value.
17	CMP1IF	CMP1 interrupt flag 0: No CMP1 output interrupt 1: CMP1 output interrupt Set by hardware when the CMP1 output is set. Cleared by software writing 1 to CMP1IC bit in the CMP_IFC register.
16	CMP0IF	CMP0 interrupt flag 0: No CMP0 output interrupt 1: CMP0 output interrupt Set by hardware when the CMP0 output is set. Cleared by software writing 1 to CMP0IC bit in the CMP_IFC register.
15:2	Reserved	Must be kept at reset value.
1	CMP1O	CMP1 output state This bit is a copy of CMP1 output state, which is read only. 0: Non-inverting input below inverting input and the output is low 1: Non-inverting input above inverting input and the output is high
0	CMP0O	CMP0 output state This bit is a copy of CMP0 output state, which is read only. 0: Non-inverting input below inverting input and the output is low 1: Non-inverting input above inverting input and the output is high

44.4.2. CMP interrupt flag clear register (CMP_IFC)

Address offset: 0x04

Reset value: 0x0000 0000

This register has to be accessed by word (32-bit).

31	30	29	28	27	26	25	24	23	22	21	20	19	18	17	16
Reserved														CMP1IC	CMP0IC
														w	w

15	14	13	12	11	10	9	8	7	6	5	4	3	2	1	0
Reserved															

Bits	Fields	Descriptions
31:18	Reserved	Must be kept at reset value.
17	CMP1IC	CMP1 interrupt flag clear 0: Not clear CMP1 interrupt flag 1: Clear CMP1 interrupt flag
16	CMP0IC	CMP0 interrupt flag clear 0: Not clear CMP0 interrupt flag 1: Clear CMP0 interrupt flag
15:0	Reserved	Must be kept at reset value.

44.4.3. CMP alternate select register (CMP_SR)

Address offset: 0x08

Reset value: 0x0000 0000

This register has to be accessed by word (32-bit).

31	30	29	28	27	26	25	24	23	22	21	20	19	18	17	16
Reserved															

15	14	13	12	11	10	9	8	7	6	5	4	3	2	1	0
Reserved					AFSE[10:0]										
										rw					

Bits	Fields	Descriptions
31:11	Reserved	Must be kept at reset value.
10:0	AFSE[10:0]	CMP selects alternate output ports For each bit, 0 is selected for CMP0_OUT as the alternate function with the corresponding GPIO, and 1 is selected for CMP1_OUT. bit0: PA6

bit1: PA8
bit2: PB12
bit3: PE6
bit4: PE15
bit5: PG2
bit6: PG3
bit7: PG4
bit8: PK0
bit9: PK1
bit10: PK2

44.4.4. CMP0 control/status register (CMP0_CS)

Address offset: 0x0C
Reset value: 0x0000 0000

This register has to be accessed by word (32-bit).

31	30	29	28	27	26	25	24	23	22	21	20	19	18	17	16
CMP0LK	Reserved			CMP0BLK[3:0]				Reserved			CMP0PSEL	Reserved	CMP0MSEL[2:0]		
rw				rw							rw		rw		

15	14	13	12	11	10	9	8	7	6	5	4	3	2	1	0
Reserved		CMP0M[1:0]		Reserved		CMP0HST[1:0]		Reserved	CMP0INTEN	Reserved		CMP0PL	CMP0SEN	CMP0BEN	CMP0EN
		rw				rw			rw			rw	rw	rw	rw

Bits	Fields	Descriptions
31	CMP0LK	CMP0 lock This bit allows to have all control bits of CMP0 as read-only. It can only be set once by software and cleared by a system reset. 0: CMP0_CS bits are read-write 1: CMP0_CS and CMP_SR bits are read-only
30:28	Reserved	Must be kept at reset value.
27:24	CMP0BLK[3:0]	CMP0 output blanking source This bit is used to select which timer output controls the comparator output blanking. 0000: No blanking 0001: Select TIMER0_CH0 output compare singal as blanking source 0010: Select TIMER1_CH2 output compare singal as blanking source 0011: Select TIMER2_CH2 output compare singal as blanking source 0100: Select TIMER2_CH3 output compare singal as blanking source 0101: Select TIMER7_CH0 output compare singal as blanking source 0110: Select TIMER14_CH0 output compare singal as blanking source

		All other values: reserved.
23:21	Reserved	Must be kept at reset value.
20	CMP0PSEL	CMP0_IP input selection This bit is used to select the source connected to the CMP0_IP input of the CMP0. 0: PB0 1: PB2
19	Reserved	Must be kept at reset value.
18:16	CMP0MSEL[2:0]	CMP0_IM internal input selection These bits are used to select the internal source connected to the CMP0_IM input of the CMP0. 000: V_{REFINT} / 4 001: V_{REFINT} / 2 010: V_{REFINT}*3 / 4 011: V_{REFINT} 100: DAC0_OUT0 101: DAC0_OUT1 110: PB1 111: PC4
15:14	Reserved	Must be kept at reset value.
13:12	CMP0M[1:0]	CMP0 mode These bits are used to control the operating mode of the CMP0 adjust the speed / consumption. 00: High speed / full power 01 / 10: Medium speed / medium power 11: Very-low speed / ultra-low power
11:10	Reserved	Must be kept at reset value.
9:8	CMP0HST[1:0]	CMP0 hysteresis These bits are used to control the hysteresis level. 00: No hysteresis 01: Low hysteresis 10: Medium hysteresis 11: High hysteresis
7	Reserved	Must be kept at reset value.
6	CMP0INTEN	CMP0 interrupt enable 0: Disabled 1: Enabled
5:4	Reserved	Must be kept at reset value.
3	CMP0PL	Polarity of CMP0 output

		This bit is used to select the polarity of CMP0 output. 0 : Output is not inverted 1 : Output is inverted
2	CMP0SEN	Voltage scaler enable bit This bit is set and cleared by software. This bit enables the outputs of the VREFINT divider, which is treated as the minus input of the comparator. 0: Disable bandgap scaler in case that CMP1SEN bit of CMP1_CS is also reset 1: Enable bandgap scaler enable
1	CMP0BEN	Scaler bridge enable bit 0: Disable scaler resistor bridge in case that CMP1BEN bit of CMP01_CS is also reset 1: Enable scaler resistor bridge
0	CMP0EN	CMP0 enable 0: CMP0 disabled 1: CMP0 enabled

44.4.5. CMP1 control/status register (CMP1_CS)

Address offset: 0x10

Reset value: 0x0000 0000

This register has to be accessed by word (32-bit).

31	30	29	28	27	26	25	24	23	22	21	20	19	18	17	16
CMP1LK	Reserved			CMP1BLK[3:0]				Reserved			CMP1PSEL	Reserved	CMP1MSEL[2:0]		
rw				rw							rw			rw	

15	14	13	12	11	10	9	8	7	6	5	4	3	2	1	0
Reserved		CMP1M[1:0]		Reserved		CMP1HST[1:0]		Reserved	CMP1INTEN	Reserved	WNDEN	CMP1PL	CMP1SEN	CMP1BEN	CMP1EN
		rw				rw			rw		rw	rw	rw	rw	rw

Bits	Fields	Descriptions
31	CMP1LK	CMP1 lock This bit allows to have all control bits of CMP1 as read-only. It can only be set once by software and cleared by a system reset. 0: CMP1_CS bits are read-write 1: CMP1_CS and CMP_SR bits are read-only
30:28	Reserved	Must be kept at reset value.
27:24	CMP1BLK[3:0]	CMP1 output blanking source This bit is used to select which timer output controls the comparator output blanking. 0000: No blanking

		0001: Select TIMER0_CH0 output compare signal as blanking source 0010: Select TIMER1_CH2 output compare signal as blanking source 0011: Select TIMER2_CH2 output compare signal as blanking source 0100: Select TIMER2_CH3 output compare signal as blanking source 0101: Select TIMER7_CH0 output compare signal as blanking source 0110: Select TIMER14_CH0 output compare signal as blanking source All other values: reserved.
23:21	Reserved	Must be kept at reset value.
20	CMP1PSEL	CMP1_IP input selection This bit is used to select the source connected to the CMP1_IP input of the CMP1. 0: PE9 1: PE11
19	Reserved	Must be kept at reset value.
18:16	CMP1MSEL[2:0]	CMP1_IM internal input selection These bits are used to select the internal source connected to the CMP1_IM input of the CMP1. 000: V_{REFINT} / 4 001: V_{REFINT} / 2 010: V_{REFINT}*3 / 4 011: V_{REFINT} 100: DAC0_OUT0 101: DAC0_OUT1 110: PE10 111: PE7
15:14	Reserved	Must be kept at reset value.
13:12	CMP1M[1:0]	CMP1 mode These bits are used to control the operating mode of the CMP1 adjust the speed / consumption. 00: High speed / full power 01 / 10: Medium speed / medium power 11: Very-low speed / ultra-low power
11:10	Reserved	Must be kept at reset value.
9:8	CMP1HST[1:0]	CMP1 hysteresis These bits are used to control the hysteresis level. 00: No hysteresis 01: Low hysteresis 10: Medium hysteresis 11: High hysteresis
7	Reserved	Must be kept at reset value.

6	CMP1INTEN	CMP1 interrupt enable 0: Disabled 1: Enabled
5	Reserved	Must be kept at reset value.
4	WNDEN	Window mode enable This bit is used to select CMP1_IP source. 0: CMP1_IP is connected to CMP1 non-inverting input 1: CMP1_IP is connected to CMP0_IP
3	CMP1PL	Polarity of CMP1 output This bit is used to select the polarity of CMP1 output. 0 : Output is not inverted 1 : Output is inverted
2	CMP1SEN	Voltage scaler enable bit This bit is set and cleared by software. This bit enables the outputs of the VREFINT divider, which is treated as the minus input of the comparator. 0: Disable bandgap scaler disable in case that CMP0SEN bit of CMP0_CS is also reset 1: Enable bandgap scaler enable
1	CMP1BEN	Scaler bridge enable bit 0: Disable scaler resistor bridge in case that CMP0BEN bit of CMP0_CS is also reset 1: Enable scaler resistor bridge
0	CMP1EN	CMP1 enable 0: CMP1 disabled 1: CMP1 enabled

45. High-Performance Digital Filter (HPDF)

45.1. Overview

A high performance digital filter module (HPDF) for external sigma delta (Σ-Δ) modulator is integrated in GD32H7xx. HPDF supports SPI interface and Manchester-coded single-wire interface. The external sigma delta modulator can be connected with MCU by the serial interface, and the serial data stream output by sigma delta modulator can be filtered. In addition, HPDF also supports the parallel data stream input, which can be selected from internal ADC peripherals or from MCU memory.

45.2. Characteristics

- 8 multiplex digital serial input channels
  - configurable SPI and Manchester interfaces
- 8 internal digital parallel input channels
  - input with up to 16-bit resolution
  - internal source: ADC data or memory (CPU/DMA write) data stream
- Configurable Sinc filter and integrator
  - the order and oversampling rate (decimation rate) of Sinc filter can be configured;
  - sampling rate of configurable integrator
- Threshold monitor function
  - independent Sinc filter, configurable order and oversampling rate (decimation rate)
  - configurable data input source: serial channel input data or HPDF output data
- Malfunction monitor function
  - A counter with 8 bits is used to monitor the continuous 0 or 1 in the serial channel input data stream
- Extreme monitor function
  - store minimum and maximum values of output data values of HPDF
- Up to 24-bit output data resolution
- Clock signal can be provided to external sigma delta modulator
  - provide configurable clock signal by the CKOUT pin
- Flexible conversion configuration function
  - the conversion channel is divided into regular group and inserted group
  - support multiple conversion modes and startup modes
- HPDF output data is in signed format

45.3. Function overview

45.3.1. HPDF Block Diagram

The structural block diagram of HPDF is shown in *Figure 45-1. HPDF block diagram*.

Figure 45-1. HPDF block diagram

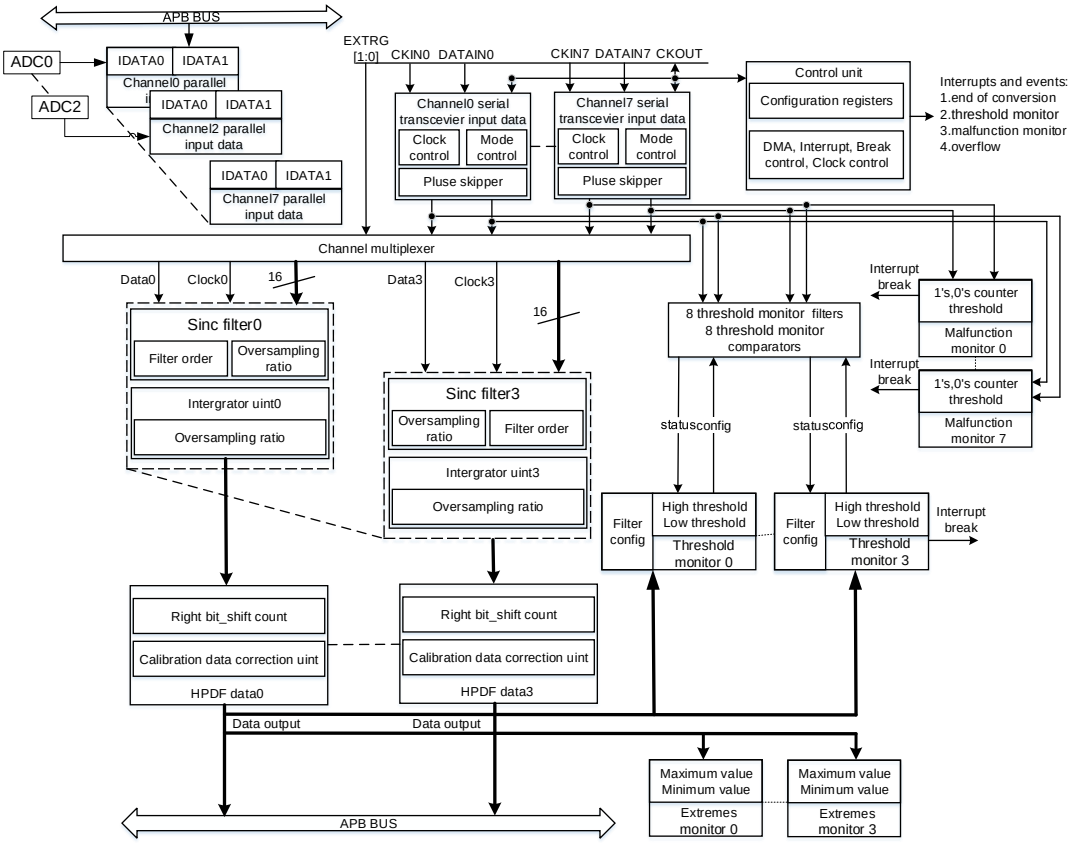

The HPDF interface communicates with the external Σ-Δ modulator by the pins and internal signal in *Table 45-1. HPDF pins definition*.

Table 45-1. HPDF pins definition

PINs	Type	Description
EXTRG[1:0]	External trigger input	Input pin of external trigger signal source, the trigger signal sources are EXTI11 and EXTI15, which are used as the trigger signal of inserted group HPDF_ ITRG[24] and HPDF_ITRG[25]
CKOUT	Clock out	The clock output signal of HPDF module, provides clock signal to external Σ-Δ modulator.
CKINx	Clock input	External Σ-Δ modulator provides clock signal

PINs	Type	Description
		to serial interface.
DATAINx	Data input	The external Σ-Δ modulator transmits 1 bit data stream to the serial channel by this pin.

Table 45-2. HPDF internal signal

Break name	Break destination
HPDF_BREAK[0]	TIMER0 break0 / TIMER14 break0 / TIMER41 break0
HPDF_BREAK[1]	TIMER0 break1 / TIMER15 break0 / TIMER42 break0
HPDF_BREAK[2]	TIMER7 break0 / TIMER16 break0 / TIMER43 break0
HPDF_BREAK[3]	TIMER7 break1 / TIMER40 break0 / TIMER44 break0

45.3.2. HPDF on-off control

When the HPDF module is started normally, the HPDF module can be enabled globally by setting HPDFEN to 1 in the HPDF_CH0CTL register. Then set the CHEN bit in HPDF_CHxCTL and the FLTEN bit in HPDF_FLTyCTL0 to 1 to enable the input channel and channel digital filter respectively. In addition, as long as the input channel is enabled, the input channel will immediately start receiving serial data.

HPDF can enter stop mode by clearing FLTEN during operation. After entering stop mode, the ongoing conversion tasks of the HPDF module will immediately stop, and the configuration of the registers remains unchanged (except for the HPDF_FLTySTAT and HPDF_FLTyTMSTAT registers are reset).

In stop mode, the HPDF system clock will automatically stop. The HPDFEN bit must be cleared before the system clock is stopped to enter stop mode.

Low power mode

HPDF module optimizes the reduction of power consumption. In the normal working mode, the filter and integrator will automatically enter the idle state to achieve the purpose of reducing power consumption when there is no conversion task.

45.3.3. HPDF clock

The clock of HPDF includes the system clock and the serial clock. The system clock is used to drive the internal modules, and the serial clock used by the serial interface.

System clock

The system clock $f_{HPDFCLK}$ of HPDF is used to drive channel transceiver, digital filter, integrator, threshold monitor, malfunction monitor, extremum detector and control module. The HPDF system clock source can be configured by the HPDFSEL bit in the RCU_CFG1 register of the RCU chapter.

Serial input clock

The serial interface of HPDF can receive clock signal from external sigma delta modulator by CKINx pin, so as to receive the serial data stream from sigma delta modulator.

Using external input clock in serial interface is limited by clock frequency. If the standard SPI interface is used, the system clock $f_{HPDFCLK} \geq 4f_{CKIN}$. If the Manchester coding interface is used, the system clock $f_{HPDFCLK} \geq 6f_{CKIN}$ is required.

Serial output clock

HPDF supports the function of outputting serial clock, which can drive sigma delta modulator connected with it. The source of the serial output clock can be selected by CKOUTSEL bit in HPDF_CH0CTL register. When CKOUTSEL=0, the serial output clock source is the HPDF system clock. When CKOUTSEL=1, the serial output clock source is the audio clock. And the configuration of the audio clock can refer to the SAI0SEL[2:0] bit field in the configuration register 2 of the RCU chapter.

After the serial output clock source is determined, the output clock frequency division can be controlled by configuring the CKOUTDIV [7:0] bit field in the HPDF_CH0CTL register. When CKOUTDIV[7:0] ≠ 0, the value of the serial output clock divider is CKOUTDIV[7:0]+1. When CKOUTDIV[7:0] = 0, the serial output clock is disabled and the pin of CKOUT remains low.

In addition, after clearing HPDFEN, the signal of serial output clock can also be stopped. When the serial output clock source is the system clock (CKOUTSEL = 0), if clear HPDFEN, the serial output clock stopped after 4 system clocks. When the serial output clock source is the audio clock (CKOUTSEL = 1), if clear HPDFEN, the serial output clock stopped after one system clock and three audio clocks.

The serial output clock source can only be modified when HPDFEN = 0. In order to avoid the burr signal on the pin of CKOUT, the software can only modify the value of the CKOUTSEL bit in the HPDF_CH0CTL register after the serial output clock stopped.

The frequency range of the serial output clock is 0-20MHz.

45.3.4. Multiplex serial data channel

HPDF has eight multiplexing serial data channels, which support SPI code and Manchester code. The interface type supported can be selected for the current channel by configuring the SITYP[1:0] bit field in the HPDF_CHxCTL register.

SPI interface

Under the standard SPI interface, sigma delta modulator sends 1-bit data stream to the serial channel by the pin of DATAINx. The clock signal between HPDF and sigma delta modulator can be output by CKOUT pin or input by CKINx pin.

The data sampling point in SPI communication is determined by the SITYP[1:0] bit field and

SPICKSS[1:0] bit field in HPDF_CHxCTL register. The data sampling points in SPI communication are shown in the table.

Table 45-3. SPI interface clock configuration

SPICKSS[1:0]	Clock source	SITYP[1:0]	Sampling point	Description
00	CKINx signal	00	rising edge	Data is sampled at the rising edge of the external serial input clock signal
		01	falling edge	Data is sampled at the falling edge of the external serial input clock signal
01	CKOUT signal	00	rising edge	The data is sampled at the rising edge of the internal serial output clock signal
		01	falling edge	The data is sampled at the falling edge of the internal serial output clock signal
10	CKOUT/2 signal (Generated at the rising edge of CKOUT)	xx	Rising edge of each second CKOUT signal	The external sigma delta modulator divides the CKOUT signal into 2 frequencies to generate the serial input communication clock. The data is sampled at the falling edge of every second CKOUT.
11	CKOUT/2 signal (Generated at the falling edge of CKOUT)	xx	Falling edge of each second CKOUT signal	The external sigma delta modulator divides the CKOUT signal into 2 frequencies to generate the serial input communication clock. The data is sampled at the rising edge of every second CKOUT.

According to *Table 45-3. SPI interface clock configuration*, the sequence diagram of SPI data transmission is shown in the figure below.

Figure 45-2. The sequence diagram of SPI data transmission

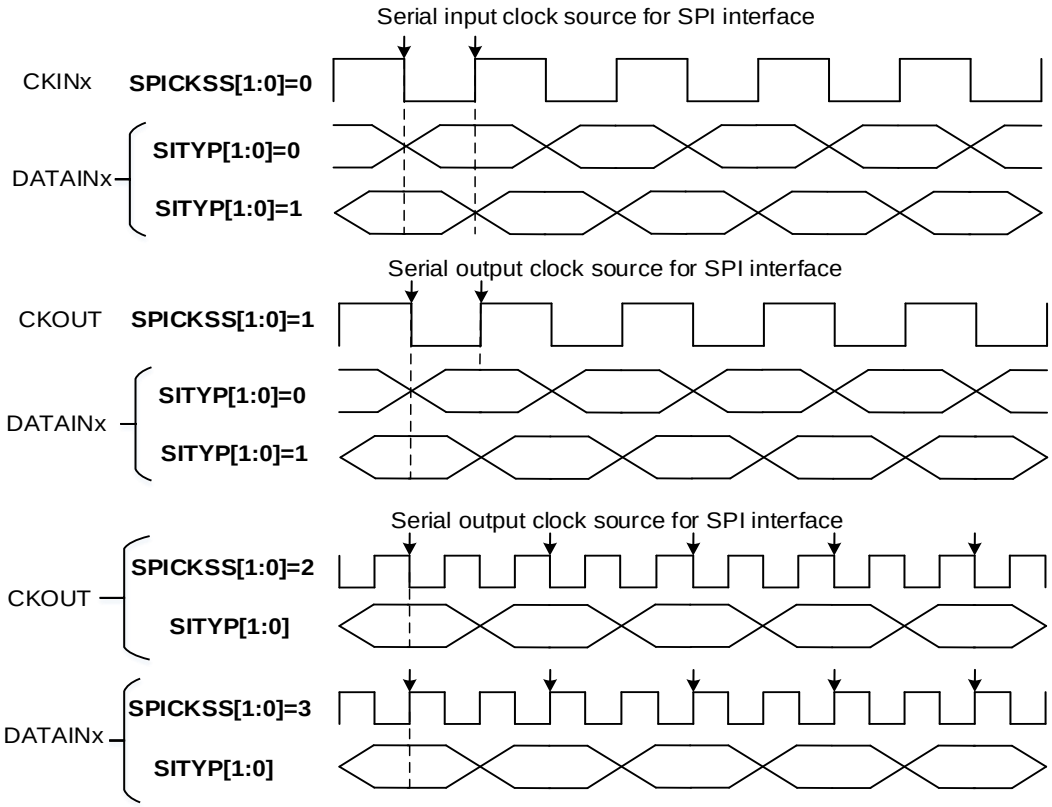

Note: if SPI data interface is adopted, the frequency range of clock source is 0-20MHz and less than $f_{HPDFCLK}/4$.

Manchester interface

HPDF has eight multiplexing serial data channels using Manchester encoding format. Two encoding formats can be configured by SITYP[1:0] bit field in HPDF_CHxCTL:

1. When SITYP[1:0] = 2, Manchester code: rising edge = logic 0, falling edge = logic 1.
2. When SITYP[1:0] = 3, Manchester code: rising edge = logic 1, falling edge = logic 0.

When Manchester code is used, the data stream between the external sigma delta modulator and HPDF is only transmitted by the DATAINx pin. After the HPDF module Manchester decoding, the clock signal and data are recovered from the serial data stream. The recovered clock signal frequency must be between 0-10MHz and less than $f_{HPDFCLK}/6$. The timing chart of Manchester data transmission is shown in the figure below.

Figure 45-3. The sequence diagram of Manchester data transmission

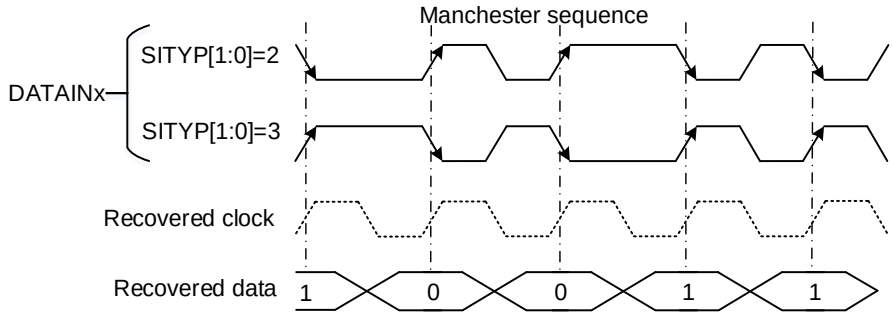

In order to receive and decode Manchester data correctly, configure the CKOUTDIV[7:0] frequency divider according to the expected flow rate of Manchester data. The value of CKOUTDIV[7:0] is calculated with reference to the following format:

$$((CKOUTDIV+1)xT_{SYSCLK})<T_{Manchester_clock}<(2xCKOUTDIV\times T_{SYSCLK}) \quad (45\text{-}1)$$

Serial communication coding synchronization

After the serial channel is enabled, the data can only be received correctly after successful synchronization. The synchronization of SPI code occurs after the first detection of clock input signal by SPI data stream. If the channel uses Manchester coding, the first synchronization occurs when the channel receives data stream changes from 1-0 or 0-1.

Before the transceiver of the serial channel synchronizes, the clock loss flag bit of channel is set to 1. After successful synchronization, the clock loss flag bit can be cleared by CKLFC[7:0]. When the transceiver of the serial channel is not synchronized, the clock loss flag bit cannot be cleared by the CKLFC[7:0]. Therefore, it is possible to determine whether the serial channel is successfully synchronized by querying the CKLF[7:0] bit circularly. The following figure shows the timing chart of the first synchronization of Manchester code.

Figure 45-4. Manchester synchronous sequence diagram

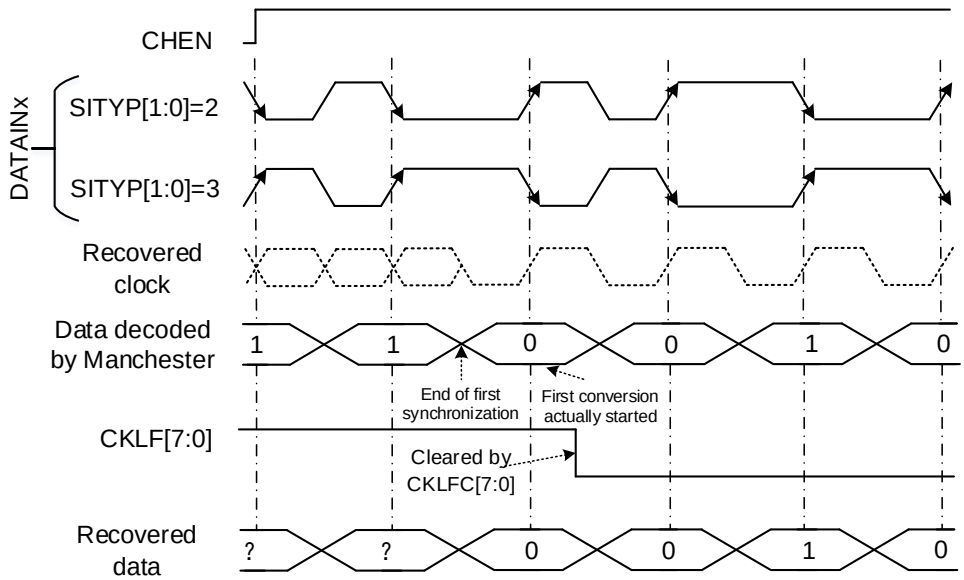

External serial clock frequency measurement

The measuring of a channel serial clock input frequency provides a real data rate from an external ΣΔ modulator, which is important for application purposes.

An external serial clock input frequency can be measured by a timer counting HPDF clocks ($f_{HPDFCLK}$) during one conversion duration. The counting starts at the first input data clock after a conversion trigger (regular or injected) and finishes by last input data clock before conversion ends (end of conversion flag is set). Each conversion duration (time between first serial sample and last serial sample) is updated in counter CNVCNT[27:0] in register HPDF_FLTxCT when the conversion finishes (ICEF=1 or RCEF=1). The user can then compute the data rate according to the digital filter settings (SFO, SFOR, IOR, FAST). The external serial frequency measurement is stopped only if the filter is bypassed (SFOR=0, only integrator is active, CNVCNT[27:0]=0 in HPDF_FLTxCT register).

In case of parallel data input the measured frequency is the average input data rate during one conversion.

Note:When conversion is interrupted (by disabling/enabling the selected channel) the interruption time is also counted in CNVCNT[27:0]. Therefore it is recommended to not interrupt the conversion for correct conversion duration result.

Conversion times:

injected conversion or regular conversion with FAST = 0 (or first conversion if FAST=1):

for Sincx filters:

$$T = CNVCNT / f_{HPDFCLK} = [SFOR * (IOR-1 +SFO) + SFO] / f_{CKIN}$$

for FastSinc filter:

$$T = CNVCNT / f_{HPDFCLK} = [SFOR * (IOR-1 +4) + 2] / f_{CKIN})$$

regular conversion with FAST = 1 (except first conversion):

for Sincx and FastSinc filters:

$$T = CNVCNT / f_{HPDFCLK} = [SFOR * IOR] / f_{CKIN})$$

in case if FOSR = FOSR[9:0]+1 = 1 (filter bypassed, active only integrator):

$$T = IOR / f_{CKIN} \text{ (but CNVCNT=0)}$$

where:

- f_{CKIN} is the channel input clock frequency (on given channel CKINx pin) or input data rate (in case of parallel data input)
- SFOR is the filter oversampling ratio: SFOR = SFOR[9:0]+1 (see HPDF_FLTxSFCFG register)
- IOR is the integrator oversampling ratio: IOR = IOR[7:0]+1 (see HPDF_FLTxSFCFG register)

- SFO is the filter order: SFO = SFO[2:0] (see HPDF_FLTxSFCFG register)

Clock loss detection

Clock loss detection is to detect whether the channel serial input clock (CKINx signal) is lost, so as to ensure whether there is any error in the data of serial channel conversion (or threshold monitor and malfunction monitor). If a clock signal loss event occurs, the given data should be discarded. When using the clock loss detection function, you must configure the ckout signal source as the system clock.

The clock loss detection function can be enabled or disabled by the CKLEN bit in HPDF_CHxCTL register. When the enable clock loss detection function and the clock loss interrupt CKLIE occur, if a clock loss event occurs, the clock loss flag bit (CKLF) will be set to 1 and a clock loss interrupt will be generated. The corresponding interrupt flag bit can be cleared by setting CKLFC[7:0] bit field.

When the transceiver of the serial interface has not been synchronized, the clock loss flag bit is set to 1 and cannot be cleared by the corresponding CKLFC[7:0]. Therefore, the correct steps to use the clock loss function are as follows:

1. Enable the channel CHEN = 1.
2. Check the clock loss flag cyclically and write 1 to the CKLFC of the channel. When it is confirmed that the CKLF bit is cleared, the serial channel transceiver synchronization is successful.
3. Enable clock loss detection function CKLEN = 1. To detect possible clock loss, enable clock loss interrupt CKLIE = 1.

If the SPI interface is used in the serial channel, the external serial input clock (CKINx signal) is compared with the serial output clock (ckout signal) when the clock loss detection function is used. The external serial input clock signal must be inverted at least once every 8 CKOUT signal cycles, otherwise a clock loss event will occur.

If the serial channel uses the Manchester interface, the clock loss detection starts after the first successful synchronization of the Manchester code, and the external serial input data (DATAINx signal) is compared with the serial output clock (CKOUT signal). The serial input data must change every 2 ckout signal cycles, otherwise clock loss event will be generated. The timing of clock loss is shown in the figure below.

Figure 45-5. Clock loss detection timing diagram

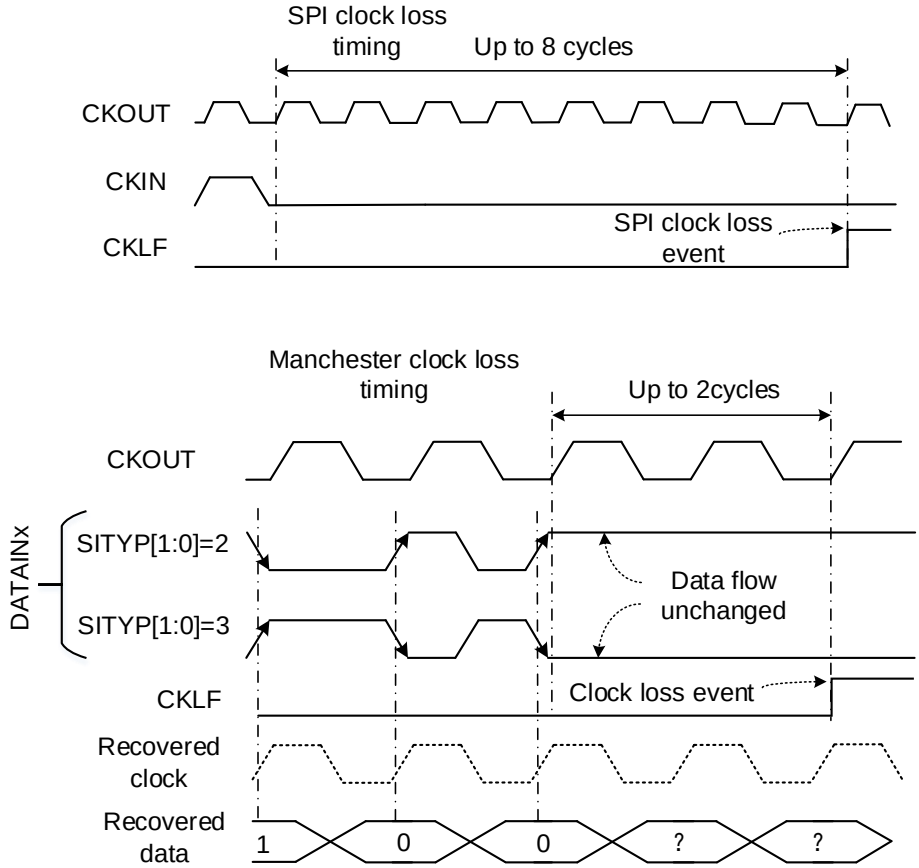

Note: the maximum rate of Manchester encoded data stream must be less than the clock output CKOUT signal.

Channel pin redirection

Channel pin redirection means that the pins of serial channel 0 can be configured as the pins of channel 1, that is, channel 0 can read information from the DATAIN1 and CKIN1 pins. Pin redirection is used to sampling audio data of PDM microphone. The audio signal of PDM microphone includes data and clock signal. The data is divided into left/right channel data. The left channel data is sampled at the rising edge of clock signal, and the right channel data is sampled at the falling edge of clock signal.

When PDM microphone data stream is input into serial channel, its configuration process is as follows:

1. Select the HPDF serial channel 1 of PDM microphone data stream input.
2. Write 0 to CHPINSEL bit of channel 1 in HPDF_CHxCTL register, and input pin of channel 1 is own pin, DATAINx and CKINx. When SITYP[1:0] = 2b’00, the serial data stream is sampled at the rising edge of the clock signal, that is, the input of channel 1 is the left channel data.
3. Set the CHPINSEL to 1 in channel 0, and the DATAINx and CKINx pins will be used for channel 0. When SITYP[1:0] = 2b’01, the serial data stream is sampled at the falling edge of the clock signal, that is, the input of channel 0 is the right channel data.

4. Configure channelx with corresponding filters to filter the left and right channel data of PDM microphone.

The channel pin redirection diagram of HPDF module is shown in ***Figure 45-6. Channel pins redirection.***

Figure 45-6. Channel pins redirection

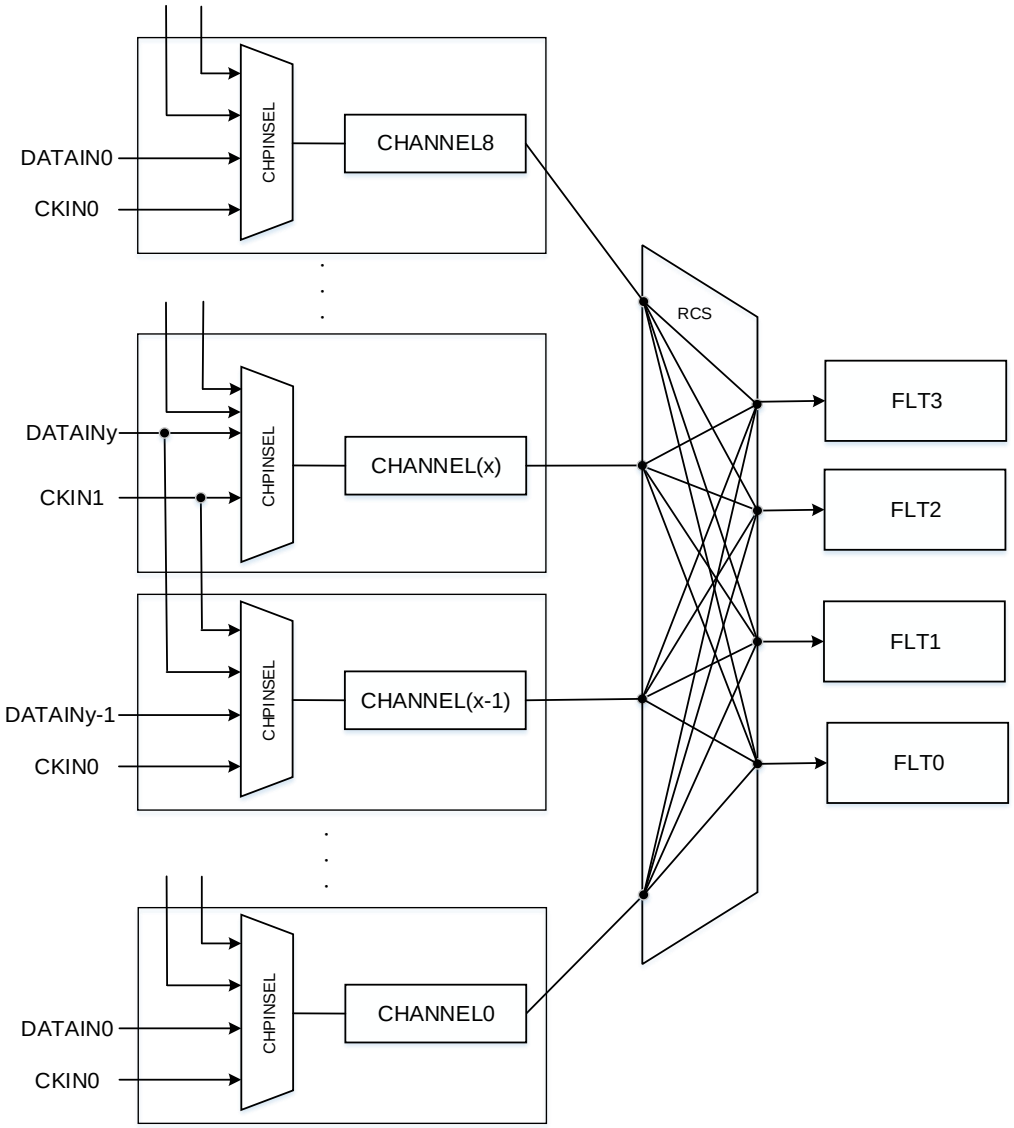

Pulses skipper

Pulse skipper refers to that the serial input data stream enters the filter after skipping a specified number of clock pulses, so as to discard a certain number of bit bits. This operation will cause the final output sample (and the next sample) from the filter to be calculated from the subsequent input data compared to the data stream that was not skipped.

The number of pulses to be skipped is determined by the PLSK[5:0] bit field in the HPDF_CHxPS register. Write the value to PLSK[5:0] bit field, and the specified channel will start to perform the pulse skipper function. Read the of PLSK[5:0], indicating the number of

remaining pulse skipper not executed. For a single write operation of PLSK[5:0], the maximum number of pulse skipper executed is 63. More pulse skipper can be obtained by writing to PLSK[5:0] bit field several times.

Serial input interface configuration

The configuration steps of serial input interface of HPDF module are as follows:

1. Configure clock output prescaler: by configuring the CKOUTDIV[7:0] bit field in the HPDF_CH0CTL register, the coefficient of prescaler is CKOUTDIV[7:0] + 1.
2. Configure the serial interface type and input clock phase: configure the serial interface type as SPI code or Manchester code, and determine the clock input sampling edge by the SITYP[1:0] bit field in HPDF_CHxCTL register.
3. Configure input clock source: select the clock source of serial interface as serial input clock or serial output clock by configuring SPICKSS[1:0] in HPDF_CHxCTL register.
4. Configure data offset correction and shift right bits: DTRS[4:0] defines the bits of the final data shift right in HPDF_CHxCFG register. After data shift, perform offset calibration defined by CALOFF [23:0] bit field.
5. Enable short circuit detection and clock loss detection function: enable short circuit detection and clock loss detection function by setting MMEN and CKLEN to 1.
6. Set the threshold monitor filter and malfunction monitor: the filter parameters of the threshold monitor, the malfunction signal allocation of the malfunction monitor and the counter threshold are all configured by the HPDF_CHxCFG1 register.

45.3.5. Parallel data input

HPDF module can select parallel data as the data input source of the channel. The CMSD[1:0] bit field in HPDF_CHxCTL is configured to determine whether the channel data input source is from serial data or parallel data. Each channel provides a 32-bit parallel data input register (HPDF_CHxPDI), which can write two 16 bit parallel data by CPU/DMA. The register has two 16-bit data in signed format.

Input from internal ADC

For parallel ADC data input (CMSD[1:0]), The ADC[x] result is assigned to channel x input. The end of conversion event from ADC[x] causes the data of channel x to be updated (the parallel data from ADC[x] is used as the next sampling for the digital filter). When the end of conversion event occurs, data from ADC[x] is written to the HPDF_CHxPDI register (DATAIN0[15:0]).

Data packing mode setting (DPM[1:0] in register HPDF_CHxCTL) has no effect on ADC data input.

CPU / DMA write parallel data

There are two ways to write parallel data: CPU direct write and DMA write. When using DMA

to write parallel data, DMA should be configured as memory to memory mode, and its target address is the address of HPDF_CHxPDI.

Note: DMA writing parallel data is different from DMA reading final conversion data from HPDF module. The latter needs to be configured in peripheral to memory mode.

Parallel data packed mode

The data stored in HPDF_CHxPDI register will be processed by channel filter. There are three modes of parallel data stored in the HPDF_CHxPDI register.In different data packed modes, the number of filter samples allowed to load depends on the value of DPM [1:0] bit field in the HPDF_CHxCTL register. The different data encapsulation modes are as follows:

1. Standard mode (DPM[1:0] = 2′b00):

   In this mode, the upper 16 bits in the HPDF_CHxPDI register are write protected, and the 16-bit data written by CPU/DMA is stored in the low 16 bit DATAIN0[15:0] bit field. CPU/DMA is configured as a 16-bit access mode. When writing 16-bit data once, the channel filter must perform an input sampling to clear the HPDF_CHxPDI register.

2. Interleaving mode (DPM[1:0] = 2′b01):

   In this mode, the CPU/DMA is configured as a 32-bit access mode, and the data is stored in the DATAIN0[15:0] bit domain of the lower 16 bits and the DATAIN1[15:0] bit domain of the higher 16 bits. When writing 32-bit data once, the channel filter must perform two input samples to clear the HPDF_CHxPDI register. The channel filter samples the DATAIN0[15:0] bit domain for the first time and the DATAIN1[15:0] bit domain for the second time.

3. Dual channel mode (DPM[1:0] = 2′b10):

   In this mode, the CPU/DMA is configured as a 32-bit access mode, and the data is stored in the DATAIN0[15:0] bit domain of the lower 16 bits and the DATAIN1[15:0] bit domain of the higher 16 bits. The data in the DATAIN0[15:0] bit field is used for the current channel x, and the data in the DATAIN1[15:0] bit field is automatically copied to the lower 16 bits of the parallel data input register of the channel x+1, and the data is used for the channel x+1. CPU/DMA writes data once, digital filter performs two sampling, the first is channel x sampling, the second is channel x+1 sampling.

In HPDF module, only even channel (channel0) supports dual channel mode. If odd channel (channel1) is configured as dual channel mode, the parallel data input register HPDF_CHxPDI of this channel is write protected. If channel x is even and configured as dual channel mode, odd channel x+1 must be configured as standard mode.

The operation mode of HPDF_CHxPDI register is as follows:

Table 45-4. Parallel data packed mode

Channel	Packed mode					
	Standard mode		Interleaving mode		Dual channel mode	
	DATAIN1	DATAIN0	DATAIN1	DATAIN0	DATAIN1	DATAIN0
Channel0	Write protect	CH0 sampling	CH0 second sampling	CH0 first sampling	CH1 sampling	CH0 sampling
Channel1	Write protect	CH1 sampling	CH1 second sampling	CH1 first sampling	Write protect	CH1 sampling
Channel2	Write protect	CH2 sampling	CH2 second sampling	CH2 first sampling	CH3 sampling	CH2 sampling
Channel3	Write protect	CH3 sampling	CH3 second sampling	CH3 first sampling	Write protect	CH3 sampling
Channel4	Write protect	CH4 sampling	CH4 second sampling	CH4 first sampling	CH5 sampling	CH4 sampling
Channel5	Write protect	CH5 sampling	CH5 second sampling	CH5 first sampling	Write protect	CH5 sampling
Channel6	Write protect	CH6 sampling	CH6 second sampling	CH6 first sampling	CH7 sampling	CH6 sampling
Channel7	Write protect	CH7 sampling	CH7 second sampling	CH7 first sampling	Write protect	CH7 sampling

CPU/DMA should write to HPDF_CHxPDI register after the channel is enabled, because after the channel is enabled, the channel conversion will be started, and the data in HPDF_CHxPDI register will be discarded before the channel conversion is started.

45.3.6. Regular group conversion

HPDF module has 8 multiplexing channels, which can be used for regular group conversion or inserted group conversion respectively. If the channel is disabled (CHEN = 0), enabling the channel conversion will cause the channel to remain in the conversion state. The channel can be restored only by enabling the channel (CHEN=1) or disabling the HPDF module (HPDFEN=0).

The regular group selects only one of the 8 channels, which is determined by the RCS bit in the HPDF_FLTyCTL0 register. At the same time, only one regular conversion can be executed or pending. If an existing regular conversion request has not been completed, the new regular conversion start request is ignored. The priority of regular conversion is lower than that of inserted group conversion and can be interrupted by inserted group conversion request.

The conversion time of regular group: t = CTCNT[27:0] / $f_{HPDFCLK}$.

Conversion start mode

Regular group conversion can only be achieved by software startup. There are two modes of software startup, the specific methods are as follows:

1. General software startup: write 1 to SRCs bit in HPDF_FLTyCTL0 register.
2. Software synchronous start: Set the RCSYN bit in HPDF_FLTyCTL0 register and start the regular conversion of HPDF_FLT0 by general software startup. Then HPDF_FLTy also starts the regular conversion synchronously.

Conversion mode

Regular group transformation supports continuous mode and fast mode.

Continuous mode

Set the RCCM bit to 1 in HPDF_FLTyCTL0 register to enable continuous mode. In continuous mode, after the software starts the regular group conversion, the conversion regular group channel conversion is repeated. When the RCCM bit is cleared, the regular conversion in continuous mode stops immediately.

Fast mode

Enable fast mode by setting FAST bit to 1 in HPDF_FLTyCTL0. In fast mode, it can improve the data rate in continuous mode. Because in continuous mode, if the data is continuously converted from one channel, there is no need to fill the filter with new data, because the data in the filter is valid data sampled from the previous continuous mode. The increase in data rate is determined by the order of the selected filter.

After the continuous conversion is started, the time for the first conversion of the fast mode to the non open fast mode is the same, and then the subsequent conversion will be completed at a shorter time interval.

45.3.7. Inserted group conversion

The conversion channel of the inserted group must select at least one of the 8 channels. You can select which channel to convert into the inserted group by the ICGSEL[7:0] bit field in the HPDF_FLTyICGS register. ICGSEL[y]=1 means channel x is the inserted group channel.

The priority of the inserted group is higher than that of the regular group. The ongoing regular group conversion will be interrupted by the inserted group conversion request. Wait for the inserted group to complete the conversion and restart the interrupted regular conversion. At the same time, only one inserted conversion is in execution or pending state. If an existing inserted conversion request has not been completed, the new inserted conversion start request will be ignored.

The conversion time of the inserted group t=CTCNT[27:0] * $f_{HPDFCLK}$.

Conversion start mode

The conversion of the inserted group can be achieved through channel software startup and trigger startup.

1. General software startup: write 1 to the SICC bit in HPDF_FLTyCTL0 register.

2. Software synchronous startup: Set the ICSYN bit in HPDF_FLTyCTL0 register to start synchronously. When using general software to start the inserted group conversion of HPDF_FLT0, the channel 1 that enables the synchronous start function also starts the inserted conversion.
3. Trigger startup: When the ICTSSEL[4:0] bit field in the HPDF_FLTyCTL0 register is written with a value other than 0, it indicates that trigger start is enabled and trigger signal source is selected at the same time. The effective edge of the trigger is determined by the ICTEEN[1:0] bit field.

The trigger signals of the inserted group are shown in the following table:

Table 45-5. Trigger signal of inserted group

Trigger signal	Signal source
HPDF_ITRG0	TIMER0_TRGO0
HPDF_ITRG1	TIMER0_TRGO1
HPDF_ITRG2	TIMER7_TRGO0
HPDF_ITRG3	TIMER7_TRGO1
HPDF_ITRG4	TIMER2_TRGO0
HPDF_ITRG5	TIMER3_TRGO0
HPDF_ITRG6	TIMER15_CH1
HPDF_ITRG7	TIMER5_TRGO0
HPDF_ITRG8	TIMER6_TRGO0
HPDF_ITRG[9~10]	Reserved
HPDF_ITRG11	TIMER22_TRGO0
HPDF_ITRG12	TIMER23_TRGO0
HPDF_ITRG[13~23]	Reserved
HPDF_ITRG24	EXTI11
HPDF_ITRG25	EXTI15
HPDF_ITRG26	-
HPDF_ITRG27	-
HPDF_ITRG28	-
HPDF_ITRG[29~30]	Reserved
HPDF_ITRG31	HPDF_ITRG

Scan conversion mode

By setting the SCMOD bit in HPDF_FLTyCTL0 register, the scan conversion mode for inserted group conversion can be enabled. In the scan mode, when the inserted group conversion is triggered, all channels in the inserted group will be converted sequentially starting from the lowest channel.

If the scan mode is disabled, each time the inserted group conversion is triggered, only one channel in the inserted group will be converted, and the next trigger will select another channel. And writing to the ICGSEL[7:0] bit field will use the lowest channel as the selected conversion channel.

Conversion request priority

The conversion of the inserted group has a higher priority than the regular group. The regular conversion that is already in progress will be immediately interrupted by the inserted conversion request. When the inserted conversion sequence ends, if RCCM remains at 1, the continuous regular conversion will start again.The value of the RCHPDT bit indicates that the interrupted regular conversion is delayed.

If an inserted conversion is pending or already in progress, you cannot start other inserted conversions: as long as ICPF=1, any request to launch an inserted conversion (software or trigger start) will be ignored. The regular conversion is the same.

When the inserted conversion is in progress (ICPF=1), write 1 to the SRCS bit of HPDF_FLTyCTL0 to request regular conversion. When the inserted sequence is completed, the priority indicates the next step to perform regular conversion, and the delayed start is indicated by the RCHPDT bit.

45.3.8. Digital filter

The digital filter of the HPDF module is of $Sinc^X$ type. The input data stream is filtered by $Sinc^X$, thereby reducing the output data rate and increasing the output data resolution. Configure the order and oversampling rate (decimation filtering) of the $Sinc^X$ filter by the SFO[2:0] and SFOR[9:0] bits in the HPDF_FLTySFCFG register. The user can configure the order and oversampling rate of the $Sinc^X$ filter according to the desired resolution. The relationship between the maximum output resolution of $Sinc^X$ filtering and oversampling filtering is as follows:

Table 45-6. The relationship between the maximum output resolution and oversampling filtering of SincX filtering

SFOR	Sinc	$Sinc^2$	FastSinc	$Sinc^3$	$Sinc^4$	$Sinc^5$
x	±x	$\pm x^2$	$\pm 2x^2$	$\pm x^3$	$\pm x^4$	$\pm x^5$
4	±4	±16	±32	±64	±256	±1024
8	±8	±64	±64	±512	±4096	±32768
32	±32	±1024	±2048	±32768	±1048576	±33554432
64	±64	±4096	±8192	±262144	±16777216	±1073741824
128	±128	±16384	±32768	±2097152	±268435456	-
256	±256	±65536	±131072	±16777216	Under full-scale input conditions, the result will overflow	
1024	±1024	±1048576	±2097152	±1073741824		

Note: The maximum output resolution in this table comes from the peak data value of the filter output.

45.3.9. Integrator

The integrator performs further oversampling rate (decimation rate) and resolution

improvement on the data from the digital filter. The integrator performs a simple summation operation on a given number of data samples from the filter. The output data of the integrator comes from the sum of the output samples of the filter, and the number of output samples is determined by the oversampling rate of the integration. The oversampling rate (decimation filtering) of the integrator can be configured by IOR[7:0] in HPDF_FLTySFCFG register. The relationship between the maximum output resolution, oversampling rate, and Sinc filter order of the integrator is as follows:

Table 45-7. Relationship between the maximum output resolution and IOR, SFOR, SFO of the integrator

Filter type	Integrator maximum output resolution
Sinc	±(SFOR×IOR)
$Sinc^2$	±($SFOR^2$×IOR)
FastSinc	±(2$SFOR^2$×IOR)
$Sinc^3$	±($SFOR^3$ ×IOR)
$Sinc^4$	±($SFOR^4$×IOR)
$Sinc^5$	±($SFOR^5$×IOR)

45.3.10. Threshold monitor

The threshold monitor of the HPDF module is used to monitor the serial input data of the channel or the final output data after the channel conversion. When the data reaches the threshold set by the threshold monitor (maximum or minimum threshold), an interrupt or break event will be generated. The maximum threshold is determined by the HTVAL[23:0] bits in HPDF_FLTyTMHT register, and the minimum threshold is determined by the LTVAL[23:0] bits in HPDF_FLTyTMLT register.

The HPDF module has four threshold monitor. By configuring the TMCHEN[1:0] bit field in HPDF_FLTyCTL1 register, it determines whether the analog threshold monitor x monitors the input channel. For example, TMCHEN[1]=1 in HPDF_FLT0CTL1 register means threshold monitor 0 monitors channel 1.

Threshold monitor working mode

The working mode of the threshold monitor is divided into standard mode and fast mode. Fast mode is to configure the serial input data of the threshold monitor monitoring channel and compare it with the threshold. Standard mode is to configure the final data output after the threshold monitor monitor channel conversion (stored in the inserted group data register HPDF_FLTyIDATA or the regular group data register HPDF_FLTyRDATA). The fast mode of the threshold monitor can be enabled by the TMFM bit in HPDF_FLTyCTL0. The characteristics in both cases are as follows:

Table 45-8. Features of threshold monitor working mode

Mode	Enable Bit	Channel Data	Analog Input	Input Data	Detailed Description

		Source	Data Source	Resolution	
Standard mode	TMFM=0	Serial data stream, Parallel data	HPDF final data output	24bit	The threshold monitor monitors the final data output after the channel conversion. Slow response time, not suitable for overcurrent/overvoltage detection
Fast mode	TMFM=1	Serial data stream	Serial data stream	16bit	The input data is provided in continuous mode, and the threshold monitor directly monitors the serial input data, regardless of rules or injection conversion. Fast response time, suitable for overcurrent/overvoltage detection.

In fast mode, the threshold monitor uses only the upper 16 bits of the threshold (maximum threshold HTVAL[23:0] or minimum threshold LTVAL[23:0]) to compare with the serial input data of the channel, that is, only the upper 16 bits of HTVAL[23:0] and LTVAL[23:0] define the threshold, because the resolution of the threshold monitor filter is 16 bits.

In non-fast mode of threshold monitor, the final data of right shift and offset calibration will be compared with HTVAL[23:0] and LTVAL[23:0].

Threshold monitor fast mode

In fast mode, the filter of the threshold monitor will be used, and the oversampling rate (decimation rate) and order of the threshold monitor filter can be set in HPDF_CHxCFG1 register.

The configuration of the threshold monitor is flexible. An threshold monitor can be configured to monitor multiple channels by the TMCHEN[1:0] bit field in HPDF_FLTyCTL1 register. In this case, when multiple channels send out requests, the threshold monitor will preferentially process requests with small channel numbers, and then process requests with large channel numbers. Each threshold monitor has a status register HPDF_FLTyTMSTAT. When the monitored channel exceeds the threshold, the corresponding flag in the HTF[7:0] or LTF[7:0] bit field will be set. If HTF[0]=2b’01, it means that channel 0 occured an event that exceeds the upper threshold.

After each channel sends a comparison request, it will be executed within 8 HPDF clock cycles. Therefore, the bandwidth of each channel is limited to 8 HPDF clock cycles (if

TMCHEN[7:0]=255). Since the maximum sampling frequency of the input channel is $f_{HPDFCLK}/4$, at this input clock speed, the threshold monitor filter cannot be bypassed (TMFOR=0). Therefore, the user must correctly configure the threshold monitor filter parameters and the number of channels monitored based on the input sampling clock speed and $f_{HPDFCLK}$.

In fast mode, reading the TMDATA[15:0] bit field in HPDF_CHxTMFDT register to get the threshold monitor filter data for the given channel x. The number of serial samples required for a result of the threshold monitor filter output (at the serial input clock frequency f_{CKIN}) is as follows:

1. First conversion:

   FastSinc filter: Number of samples is equal to (TMSFO×4+ 2+1).

   $Sinc^X$ filter (x=1..5): Number of samples is equal to (((TMSFO[1:0]+1)×TMFOR)+ TMSFO+1).

2. Subsequent conversions other than the first conversion:

   FastSinc and $Sinc^X$ filter (x=1..5): Number of samples is equal to (TMSFO[1:0]+1)×(IOR[7:0]+1).

Threshold monitor flag

The global state of the threshold monitor is the TMEOF flag in HPDF_FLTySTAT register. When TMEOF=1, it indicates that at least one threshold monitor event has occurred, that is, an event that exceeds the (upper/lower limit) threshold is generated. If the threshold monitor event interrupt TMIE=1 in HPDF_FLTyCTL1 register is enabled, an threshold monitor interrupt can be generated. When all HTF[7:0] and LTF[7:0] are cleared, the TMEOF bit is cleared.

The HPDF_FLTyTMSTAT register defines the error event flag of the channel exceeding the threshold. The HTF[1:0] bit field indicates whether the maxmum threshold HTVAL[23:0] has been exceeded on the channel x. The LTF[1:0] bit field indicates whether the minimum threshold LTVAL[23:0] value has been exceeded on channel x. Clear the threshold event flag by writing "1" to the corresponding HTFC[7:0] or LTFC[7:0] bit in the HPDF_FLTyTMFC register.

As is shown in ***Table 45-2. HPDF internal signal***, there are 4 break output signals in the HPDF module. The break output signals are assigned to threshold monitor threshold event by setting the HTBSD[3:0] and LTBSD[3:0] bit fields in the HPDF_FLTyTMHT register and the HPDF_FLTyTMLT register.

45.3.11. Malfunction monitor

The purpose of the malfunction monitor is to be able to send a signal with an extremely fast response time when the analog signal reaches a saturation value and remains in this state for a given time. This feature can be used to detect short-circuit or open-circuit faults (e.g.

overcurrent/overvoltage). The broken output signals can be assigned to the malfunction monitor event, which can be configured by the MMBSD[3:0] bit field in the HPDF_CHxCFG1 register. The broken output signal is the same as the threshold monitor.

The input data of the malfunction monitor comes from the serial input data of the channel.When the channel input data source is parallel data, the malfunction monitor function is prohibited.There is an up counter on each input channel to record how many consecutive 0 or 1 on the output of the serial data receiver. When the counter reaches the threshold value of the malfunction monitor (MMCT[7:0] bits in the HPDF_CHxCFG1 register), a malfunction event occurs. If a 0-1 or 1-0 change is encountered when monitoring the data stream, the value of the counter will be automatically cleared and counted again.

The user can enable the malfunction monitor function by setting the MMEN bit in HPDF_CHxCTL register. When a malfunction event occurs on the channel, the corresponding malfunction monitor flag MMF[1:0] is set. The corresponding flag can be cleared by MMFC[1:0] in HPDF_FLTyINTC. If channel x is disabled (CHEN=0), the hardware will also clear the malfunction monitor flag.

45.3.12. Extremes monitor

The extremes monitor is used to sample the minimum and maximum values (peak to peak) of the final output data word. An extremes monitor can be configured to sample the extreme values of multiple channels through the EMCS[7:0] bit field in HPDF_FLTyCTL1 register.

If the sampling final output data word is higher than the value in the maximum value register of the extremes monitor (MAXVAL[23:0] bits in the HPDF_FLTyEMMAX register), the value of this register is updated to the current final output data. If the sampling final output data word is smaller than the value in the minimum value register of the extremes monitor (MINVAL[23:0] bits in HPDF_FLTyEMMIN register), the value of this register is updated to the current final output data. The values of the MAXDC bit and the MINDC bit indicate which channel the maximum/minimum value comes from.

When reading the HPDF_FLTyEMMAX or HPDF_FLTyEMMIN register, the maximum or minimum value is updated with the reset value.

45.3.13. Data unit

The data unit is the last part of data processing in the entire HPDF module, and the flow of data processing by the HPDF module is shown in the following figure.

Figure 45-7. HPDF module external input data processing flow

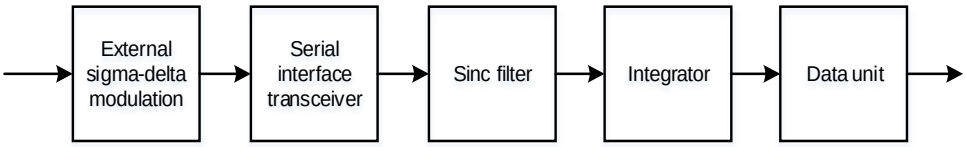

The output data rate depends on the serial data stream rate, filter and integrator settings. The

maximum output data rate is shown in the table below.

Table 45-9. Maximum output rate

Input source	Conversion mode	Filter type	Maximum output data rate (samples/second)
Serial input	Non-fast mode (FAST=0)	$Sinc^X$	$\frac{f_{CKIN}}{SFOR\times(IOR-1+SFO)+(SFO+1)}$
	Non-fast mode (FAST=0)	FastSinc	$\frac{f_{CKIN}}{SFOR\times(IOR-1+4)+(2+1)}$
	Fast mode (FAST=1)	FastSinc and $Sinc^X$	$\frac{f_{CKIN}}{SFOR\times IOR}$
Parallel input	Non-fast mode (FAST=0)	$Sinc^X$	$\frac{f_{DATA}}{SFOR\times(IOR-1+SFO)+(SFO+1)}$
	Non-fast mode (FAST=0)	FastSinc	$\frac{f_{DATA}}{SFOR\times(IOR-1+4)+(2+1)}$
	Fast mode (FAST=1)	FastSinc and $Sinc^X$	$\frac{f_{DATA}}{SFOR\times IOR}$

Note: f_{DATA} is the parallel data rate of the CPU/DMA input. When the filter is bypassed, $f_{DATA} \leqslant f_{HPDFCLK}$ must be satisfied.

Signed data format

Signed data in HPDF module: parallel data register, regular and inserted group data register, threshold monitor vlaue, extreme monitor value, and offset calibration are all signed formats. The most significant bit of the output data indicates the sign of the value, and the data is in two's complement format.

Since all operations in digital processing are performed on 32-bit signed registers, the following conditions must be met in order for the result not to overflow:

1. When using $Sinc^X$ filter (x=1..5): $(SFOR^{SFO})\times IOR \leq 2^{31}$.
2. When using FastSinc filter: $2\times(SFOR^2)\times IOR \leq 2^{31}$.

Data right bit shift

Since the final data width is 24 bits and the data from the processing path can be up to 32 bits, the right shift of the final data is performed in this module. For each selected input channel, the number of bits shifted to the right can be configured in the DTRS[4:0] bit field in the HPDF_CHxCFG0 register. The result is round to the nearest value by abandoning the lowest bit.

Data offset calibration

In the HPDF module, each channel has a data offset calibration value, which is stored in the CALOFF[23:0] bit field in HPDF_CHxCFG0 register. When offset calibration is performed, the offset calibration value is subtracted from the output data of the channel to obtain the final

data output by the HPDF module.

Data offset calibration occurs after the right shift of the data.

45.3.14. HPDF interrupt

HPDF interrupt events can be divided into channel conversion interrupt events, threshold monitor interrupt events, malfunction monitor interrupt events, and channel clock loss interrupt events. The specific interrupt event description is as *Table 45-10. HPDF interrupt event*.

Table 45-10. HPDF interrupt event

Interrupt event	description	Clear	Enable interrupt
ICEF	end of inserted conversion	Read HPDF_FLTyIDATA register	ICEIE
RCEF	end of regular conversion	Read HPDF_FLTyRDATA register	RCEIE
ICDOF	inserted conversion data overflow	Write 1 to the ICDOFC bit	ICDOIE
RCDOF	regular conversion data overflow	Write 1 to RCDOFC bit	RCDOIE
TMEOF HTF[7:0] LTF[7:0]	threshold monitor events	Write 1 to HTFC[7:0] bit field Write 1 to LTFC[7:0] bit field	TMIE
MMF	malfunction event	Write 1 to MMFC[7:0] bits	MMIE
CKLF	Channel clock loss event	Write 1 to CKLFC[7:0] bits	CKLIE

HPDF interrupt logic is as *Figure 45-8. HPDF interrupt logic diagram* shown.

Figure 45-8. HPDF interrupt logic diagram

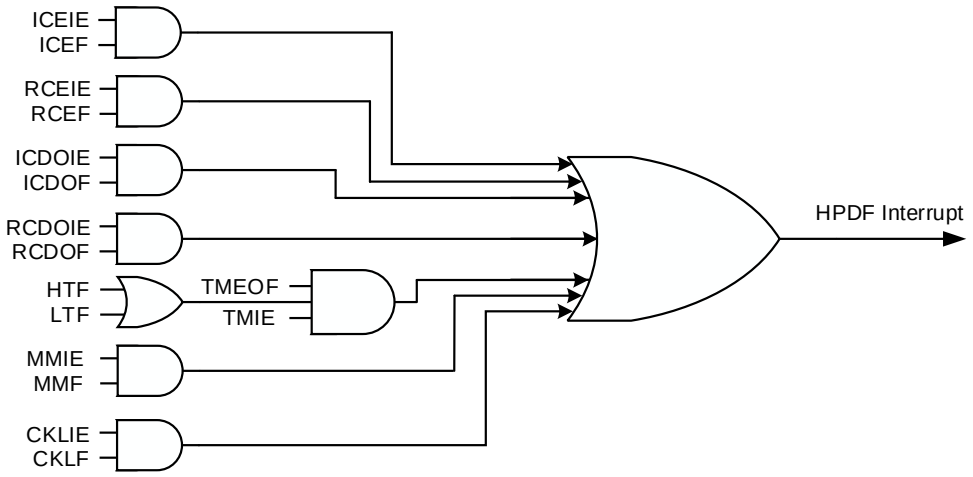

45.4. Register definition

HPDF base address: 0x4001 7000

45.4.1. HPDF channel x registers (x=0, 7)

Channel x control register (HPDF_CHxCTL)

Address offset: 0x00 + 0x20 * x, (x = 0, 7)

Reset value: 0x0000 0000

This register has to be accessed by word (32-bit).

31	30	29	28	27	26	25	24	23	22	21	20	19	18	17	16
HPDFEN	CKOUTSEL	CKOUTDM	Reserved					CKOUTDIV[7:0]							
rw	rw	rw						rw							

15	14	13	12	11	10	9	8	7	6	5	4	3	2	1	0
DPM[1:0]		CMSD[1:0]		Reserved			CHPINSEL	CHEN	CKLEN	MMEN	Reserved	SPICKSS[1:0]		SITYP[1:0]	
rw		rw					rw	rw	rw	rw		rw		rw	

Bits	Fields	Descriptions
31	HPDFEN	Global enable for HPDF interface 0: HPDF disabled 1: HPDF enabled If HPDFEN=0, the HPDF_FLTySTAT register and HPDF_FLTyTMSTAT register is set to reset state. This bit is only available in HPDF_CH0CTL.
30	CKOUTSEL	Serial clock output source selection 0: Serial clock output source is from CK_HPDF clock 1: Serial clock output source is from CK_HPDFAUDIO clock This bit can be configured only when HPDFEN=0. This bit is only available in HPDF_CH0CTL.
29	CKOUTDM	Serial clock output duty mode 0: Serial clock output duty mode disable 1: Serial clock output duty mode enable, the duty is 1:1 This bit can be configured only when HPDFEN=0. This bit is only available in HPDF_CH0CTL.
28:24	Reserved	Must be kept at reset value.
23:16	CKOUTDIV[7:0]	Serial clock output divider 0: Output clock generation is disabled (CKOUT signal is set to low state)

		1~255: The value of division for the serial clock output is CKOUTDIV+1. CKOUTDIV also defines the threshold for a clock loss detection. This value can only be modified when HPDFEN=0.During a HPDF clock cycle after HPDFEN=0, the CKOUT is set to low state. This bit is only available in HPDF_CH0CTL.
15:14	DPM[1:0]	Data packing mode for HPDF_CHxPDI register 00: Standard mode 01: Interleaved mode 10: Dual mode 11: Reserved For a detailed introduction of data encapsulation mode, please refer to ***Parallel data packed mode.*** These bits can be configured only when CHEN=0.
13:12	CMSD[1:0]	Channel x multiplexer select input data source 00: Input data source for channel x is taken from serial inputs 01: Input data source for channel x is taken from the internal analog-to-digital converter ADC output register update 10: Input data source for channel x is taken from internal HPDF_CHxPDI register 11: Reserved The HPDF_CHxPDI register is write protected when these bits are reset. These bits can be configured only when CHEN=0.
11:9	Reserved	Must be kept at reset value.
8	CHPINSEL	Channel inputs pins selection 0: Channel inputs select pins of the current channel x 1: Channel inputs select pins of the next channel. This bit can be configured only when CHEN=0.
7	CHEN	Channel x enable 0: Channel x disabled 1: Channel x enabled If channel x is enabled, then serial data will be received based on the given channel settings.
6	CKLEN	Clock loss detector enable 0: Clock loss detector disabled 1: Clock loss detector enabled
5	MMEN	Malfunction monitor enable 0: malfunction monitor is no effect 1: malfunction monitor is effect
4	Reserved	Must be kept at reset value.
3:2	SPICKSS[1:0]	SPI clock source select

		00: External CKINx input is selected for SPI clock source, sampling point is determined by SITYP[1:0] 01: Internal CKOUT output is selected for SPI clock source, sampling point is determined by SITYP[1:0] 10: Internal CKOUT is selected for SPI clock source, sampling point on each second CKOUT falling edge. 11: Internal CKOUT output is selected for SPI clock source, sampling point on each second CKOUT rising edge. These bits can be configured only when CHEN=0.
1:0	SITYP[1:0]	Serial interface type 00: SPI interface, sample data on rising edge 01: SPI interface, sample data on falling edge 10: Manchester coded input: rising edge = logic 0, falling edge = logic 1 11: Manchester coded input: rising edge = logic 1, falling edge = logic 0 These bits can only be configured when CHEN=0.

Channel x configuration register 0 (HPDF_CHxCFG0)

Address offset: 0x04 + 0x20 * x, (x = 0, 7)

Reset value: 0x0000 0000

This register has to be accessed by word (32-bit).

31	30	29	28	27	26	25	24	23	22	21	20	19	18	17	16
CALOFF[23:8]															
rw															

15	14	13	12	11	10	9	8	7	6	5	4	3	2	1	0
CALOFF[7:0]								DTRS[4:0]					Reserved		
rw								rw							

Bits	Fields	Descriptions
31:8	CALOFF[23:0]	24-bit calibration offset Calibration offset must be performed for each conversion result of the channel. These bits can be set by software.
7:3	DTRS[4:0]	Data right bit-shift 0-31: The number of bits that determine the right shift of data Bit-shift is performed before offset correction. The data shift rounds the result to the nearest integer value and the sign is preserved. These bits can be configured only when CHEN=0 (in HPDF_CHxCTL register).
2:0	Reserved	Must be kept at reset value.

Channel x configuration register 1 (HPDF_CHxCFG1)

Address offset: 0x08 + 0x20 * x, (x = 0, 7)

Reset value: 0x0000 0000

This register has to be accessed by word (32-bit).

31	30	29	28	27	26	25	24	23	22	21	20	19	18	17	16
Reserved								TMSFO[1:0]		Reserved	TMFOR[4:0]				
								rw			rw				

15	14	13	12	11	10	9	8	7	6	5	4	3	2	1	0
MMBSD[3:0]				Reserved				MMCT[7:0]							
rw								rw							

Bits	Fields	Descriptions
31:24	Reserved	Must be kept at reset value.
23:22	TMSFO[1:0]	Threshold monitor Sinc filter order selection 00: FastSinc filter 01: $Sinc^1$ filter 10: $Sinc^2$ filter 11: $Sinc^3$ filter These bits can be configured only when CHEN=0 (in HPDF_CHxCTL register).
21	Reserved	Must be kept at reset value
20:16	TMFOR[4:0]	Threshold monitor filter oversampling rate (decimation rate) 0 - 31: The filter decimation rate equal to TMFOR[4:0]+ 1 If TMFOR=0, the filter is bypassed. These bits can be configured only when CHEN=0 (in HPDF_CHxCTL register).
15:12	MMBSD[3:0]	Malfunction monitor break signal distribution MMBSD[i] = 0: Break i signal not is distributed to malfunction monitor on channel x MMBSD[i] = 1: Break i signal is distributed to malfunction monitor on channel x
11:8	Reserved	Must be kept at reset value.
7:0	MMCT[7:0]	Malfunction monitor counter threshold These bits be used determine the count value of malfunction monitor counter threshold. The count value is written by software. If the count value is reached, then an event of malfunction monitor occurs on a given channel.

Channel x threshold monitor filter data register (HPDF_CHxTMFDT)

Address offset: 0x0C + 0x20 * x, (x = 0, 7)
Reset value: 0x0000 0000

This register has to be accessed by word (32-bit).

31	30	29	28	27	26	25	24	23	22	21	20	19	18	17	16
Reserved															

15	14	13	12	11	10	9	8	7	6	5	4	3	2	1	0
TMDATA[15:0]															
r															

Bits	Fields	Descriptions
31:16	Reserved	Must be kept at reset value.
15:0	TMDATA[15:0]	Threshold monitor data The data is come from the threshold monitor filter and continuously converted (no trigger) for this channel.

Channel x parallel data input register (HPDF_CHxPDI)

Address offset: 0x10 + 0x20 * x, (x = 0, 7)

Reset value: 0x0000 0000

This register has to be accessed by half-word (16-bit) and word (32-bit).

This register contains 16-bit input data to be processed by HPDF filter module.

31	30	29	28	27	26	25	24	23	22	21	20	19	18	17	16
DATAIN1[15:0]															
rw															

15	14	13	12	11	10	9	8	7	6	5	4	3	2	1	0
DATAIN0[15:0]															
rw															

Bits	Fields	Descriptions
31:16	DATAIN1[15:0]	Data input for channel x or channel x+1 Data can be written by CPU/DMA. If DPM[1:0]=0 (standard mode), DATAIN1[15:0] is write protected. If DPM[1:0]=1 (interleaved mode), second channel x data sample is stored into DATAIN1[15:0]. First channel x data sample is stored into DATAIN0[15:0]. Both samples are read sequentially by HPDF_FLTy filter. If DPM[1:0]=2 (dual mode): For channel 0: sample in DATAIN1[15:0] is automatically copied into DATAIN0[15:0] of channel 1. For channel 1: DATAIN1[15:0] is write protected. The more details refer to ***Parallel data packed mode*** DATAIN1[15:0] is a signed format data.
15:0	DATAIN0[15:0]	Data input for channel x Data can be written by CPU/DMA. If DPM[1:0]=0 (standard mode), channel x data sample is stored into DATAIN0[15:0]. If DPM[1:0]=1 (interleaved mode), first channel x data sample is stored into DATAIN0[15:0]. Second channel x data sample is stored into DATAIN1[15:0]. Both

samples are read sequentially by HPDF_FLTy filter.

If DPM[1:0]=2 (dual mode):

For channel 0: Channel x data sample is stored into DATAIN0[15:0].

For channel 1: DATAIN0[15:0] is write protected.

The more details refer to ***Parallel data packed mode***

DATAIN0[15:0] is a signed format data.

Channel x pulse skip register (HPDF_CHxPS)

Address offset: 0x14 + 0x20 * x, (x = 0, 7)

Reset value: 0x0000 0000

This register has to be accessed by word (32-bit).

31	30	29	28	27	26	25	24	23	22	21	20	19	18	17	16
Reserved															

15	14	13	12	11	10	9	8	7	6	5	4	3	2	1	0
Reserved										PLSK[5:0]					
												rw			

Bits	Fields	Descriptions
31:6	Reserved	Must be kept at reset value.
5:0	PLSK[5:0]	Pulses to skip for input data skipping function 0-63: Defines the number of serial input samples that will be skipped. Skipping function is take effect immediately after writing to this field. Read PLSK[5:0] to return the remaining value of the pulses which will be skipped. The value of PLSK[5:0] can be updated even PLSK[5:0] is not zero.

45.4.2. HPDF filter y registers (y=0, 3)

Filter y control register 0 (HPDF_FLTyCTL0)

Address offset: 0x100 + 0x80 * y, (y = 0, 3)

Reset value: 0x0000 0000

This register has to be accessed by word (32-bit).

31	30	29	28	27	26	25	24	23	22	21	20	19	18	17	16
Reserved	TMFM	FAST	Reserved		RCS[2:0]			Reserved		RCDMAEN	Reserved	RCSYN	RCCM	SRCS	Reserved
	rw	rw				rw				rw		rw	rw	rt_w	

15	14	13	12	11	10	9	8	7	6	5	4	3	2	1	0
Reserved	ICTEEN[1:0]		ICTSSEL[4:0]					Reserved		ICDMAEN	SCMOD	ICSYN	Reserved	SICC	FLTEN
	rw				rw					rw	rw	rw		rt_w	rw

Bits	Fields	Descriptions
31	Reserved	Must be kept at reset value.
30	TMFM	Threshold monitor fast mode 0: Threshold monitor watch on the final data after performing offset correction and right shift 1: Threshold monitor watch on serial input data stream
29	FAST	Fast conversion mode for regular conversions 0: Fast conversion mode disabled 1: Fast conversion mode enabled If fast mode is enabled, the normal conversion in continuous mode (except for the first conversion) is performed faster than the conversion in standard mode. This bit has no effect on conversions which are not continuous. This bit can be configured only when FLTEN=0.
28:27	Reserved	Must be kept at reset value
26:24	RCH[2:0]	Regular conversion channel selection 0: Channel 0 is selected as the regular conversion channel 1: Channel 1 is selected as the regular conversion channel … 7: Channel 7 is selected as the regular conversion channel When RCPF=1, writing this bit takes effect when the next regular conversion begins.
23:22	Reserved	Must be kept at reset value
21	RCDMAEN	DMA channel enabled to read data for the regular conversion 0: Disable the DMA channel to read regular data 1: Enable the DMA channel to read regular data This bit can be configured only when FLTEN=0.
20	Reserved	Must be kept at reset value.
19	RCSYN	Regular conversion synchronously with HPDF_FLT0 0: Do not launch a regular conversion synchronously with HPDF_FLT0 1: Launch a regular conversion synchronously in HPDF_FLTy when a regular conversion is launched in HPDF_FLT0 If RCSYN=1 in HPDF_FLT0CTL0 register, the regular conversion channel will be Launched synchronously which selected in HPDF_FLTyCTL0. This bit can be configured only when FLTEN=0.
18	RCCM	Regular conversions continuous mode 0: The regular channel is converted just once for each conversion request 1: The regular channel is converted repeatedly after each conversion request Writing "0" to this bit will immediately stop continuous mode during a continuous regular conversion.

17	SRCS	Start regular channel conversion by software 0: No effect 1: Make a request to start regular channel conversion If RCPF=1, invalid write to SRCS, and if RCSYN=1, write '1' to SRCS, launch a regular conversion synchronously. This bit is always read as '0'.
16:15	Reserved	Must be kept at reset value.
14:13	ICTEEN[1:0]	Inserted conversions trigger edge enable 00: Disable trigger detection 01: Each rising edge on the trigger signal makes a request to start an inserted conversion 10: Each falling edge on the trigger signal makes a request to start an inserted conversion 11: The edge (rising edges and falling edges) on the trigger signal make requests to start inserted conversions This bit can be configured only when FLTEN=0.
12:8	ICTSSEL[4:0]	Inserted conversions trigger signal selection 0x00~0x1F: The value indicates that different trigger signals are selected to start the conversion The maximum delay from the generation of trigger signal to the start of synchronous trigger is 1 $f_{HPDFCLK}$ clock cycle, and the delay of asynchronous trigger is 2-3 $f_{HPDFCLK}$ clock cycles. This bit can be configured only when FLTEN=0.
7:6	Reserved	Must be kept at reset value.
5	ICDMAEN	DMA channel enabled to read data for the inserted channel group 0: Disable DMA channel to read inserted conversions data 1: Enable DMA channel to read inserted conversions data This bit can be configured only when FLTEN=0.
4	SCMOD	Scan conversion mode of inserted conversions 0: One channel conversion is performed from the inserted channel group and next the channel is selected from this group. 1: The series of conversions for the inserted group channels is executed, starting over with the lowest selected channel. If SCMOD=0, writing ICGSEL will resets the channel selection to the lowest selected channel. This bit can be configured only when FLTEN=0.
3	ICSYN	Inserted conversion synchronously 0: Do not launch an inserted conversion synchronously with HPDF_FLT0 1: Launch an inserted conversion synchronously in HPDF_FLTy when an inserted conversion is launched by trigger SICC.

		This bit can be configured only when FLTEN=0.
2	Reserved	Must be kept at reset value
1	SICC	Start inserted group channel conversion 0: No effect. 1: Makes a request to convert the channels in the inserted conversion group. If ICPF=1 already, invalid write to SICC. If RCSYN=1, write '1' to SICC, launch an inserted conversion synchronously. This bit is always read as '0'.
0	FLTEN	HPDF_FLTy enable 0: HPDF_FLTy is disabled. 1: HPDF_FLTy is enabled. If HPDF_FLTy is enabled, then HPDF_FLTy starts operating according to its setting. If HPDF_FLTy is disabled, all conversions of given HPDF_FLTy are stopped immediately and all HPDF_FLTy functions are stopped. Meanwhile HPDF_FLTySTAT register and HPDF_FLTyTMSTAT register is set to the reset state.

Filter y control register 1 (HPDF_FLTyCTL1)

Address offset: 0x104 + 0x80 * y, (y = 0, 3)

Reset value: 0x0000 0000

This register has to be accessed by word (32-bit).

31	30	29	28	27	26	25	24	23	22	21	20	19	18	17	16
Reserved								TMCHEN[7:0]							
											rw				

15	14	13	12	11	10	9	8	7	6	5	4	3	2	1	0
EMCS[7:0]								Reserved	CKLIE	MMIE	TMIE	RCDOIE	ICDOIE	RCEIE	ICEIE
			rw						rw	rw	rw	rw	rw	rw	rw

Bits	Fields	Descriptions
31:24	Reserved	Must be kept at reset value.
23:16	TMCHEN[7:0]	Threshold monitor channel enable These bits select the input channel to be guarded continuously by the threshold monitor. TMCHEN[x] = 0: Threshold monitor y is disabled on channel x TMCHEN[x] = 1: Threshold monitor y is enabled on channel x
15:8	EMCS[7:0]	Extremes monitor channel selection These bits select the input channels to be taken by the extremes monitor. EMCS[x] = 0: Extremes monitor y does not monitor data from channel x EMCS[x] = 1: Extremes monitor y monitor data from channel x
7	Reserved	Must be kept at reset value

6	CKLIE	Clock loss interrupt enable 0: Detection of channel input clock loss interrupt is disabled 1: Detection of channel input clock loss interrupt is enabled This bit is only available in HPDF_FLT0CTL1 register.
5	MMIE	Malfunction monitor interrupt enable 0: malfunction monitor interrupt is disabled 1: malfunction monitor interrupt is enabled This bit is only available in HPDF_FLT0CTL1 register.
4	TMIE	Threshold monitor interrupt enable 0: Threshold monitor interrupt is disabled 1: Threshold monitor interrupt is enabled
3	RCDOIE	Regular conversion data overflow interrupt enable 0: Regular conversion data overflow interrupt is disabled 1: Regular conversion data overflow interrupt is enabled
2	ICDOIE	Inserted conversion data overflow interrupt enable 0: Inserted data overflow interrupt is disabled 1: Inserted data overflow interrupt is enabled
1	RCEIE	Regular conversion end interrupt enable 0: Regular conversion end interrupt is disabled 1: Regular conversion end interrupt is enabled
0	ICEIE	Inserted conversion end interrupt enable 0: Inserted conversion end interrupt is disabled 1: Inserted conversion end interrupt is enabled

Filter y status register (HPDF_FLTySTAT)

Address offset: 0x108 + 0x80 * y, (y = 0, 3)

Reset value: 0x0003 0000

This register has to be accessed by word (32-bit).

All the bits of HPDF_FLTySTAT are automatically reset when FLTEN=0.

31	30	29	28	27	26	25	24	23	22	21	20	19	18	17	16
MMF[7:0]								CKLF[7:0]							
r								r							

15	14	13	12	11	10	9	8	7	6	5	4	3	2	1	0
Reserved	RCPF	ICPF	Reserved								TMEOF	RCDOF	ICDOF	RCEF	ICEF
	r	r									r	r	r	r	r

Bits	Fields	Descriptions
31:24	MMF[7:0]	Malfunction monitor flag MMF[x]=0: No malfunction event occurred on channel x

		MMF[x]=1: Malfunction event occurred on channel x This bit is set by hardware. It can be cleared by software using the corresponding MMFC[x] bit in the HPDF_ FLTyINTC register. MMF[x] is cleared also by hardware when CHEN[x] = 0 (given channel is disabled). This bit is only available in HPDF_FLT0STAT register.
23:16	CKLF[7:0]	Clock loss flag CKLF[x]=0: Clock signal is not lost on channel x CKLF[x]=1: Clock signal is lost on channel x When CHEN=0 or the serial interface is not synchronized, the state is maintained by the hardware. After the synchronization of serial interface is completed, if the clock of channel x is lost, the corresponding bit in CKLF[7:0] bit field are set by hardware. By setting the CKLFC[7:0] bit field in HPDF_FLTyINTC, the corresponding bit in the CKLF[7:0] bit field can be cleared. This bit is only available in HPDF_FLT0STAT register.
15	Reserved	Must be kept at reset value
14	RCPF	Regular conversion in progress flag 0: No request of regular conversion has been generated 1: The regular conversion is in progress or a request for a regular conversion is pending If RCPF=1, a request to start a regular conversion is ignored. When write 1 to SRCS bit, the RCPF will be setted 1 immediately.
13	ICPF	Inserted conversion in progress flag 0: No request to the inserted group conversion has been generated (neither by software nor by trigger). 1: The inserted group conversion is in progress or a request for a inserted conversion is pending. If ICPF=1, a request to start an inserted conversion is ignored. When write 1 to SICC bit, the ICPF will be setted 1 immediately.
12:5	Reserved	Must be kept at reset value
4	TMEOF	Threshold monitor event occurred flag 0: No Threshold monitor event occurred. 1: Threshold monitor event occurred which detected data crosses the threshold This bit is set by hardware. It is cleared by clearing HTF[7:0] and LTF[7:0] in HPDF_FLTyTMSTAT register.
3	RCDOF	Regular conversion data overflow flag 0: No regular conversion data overflow has occurred 1: A regular conversion data overflow has occurred If RCDOF=1, it means that a regular conversion finished while RCEF has already been set. RDATA is not affected by overflows. This bit is set by hardware.

		It can be cleared by setting the RCDOFC in the HPDF_FLTyINTC register.
2	ICDOF	Inserted conversion data overflow flag 0: No inserted conversion data overflow has occurred 1: An inserted conversion data overflow has occurred If RCDOF=1, it means that an inserted conversion finished while ICEF has already been set. FLTyIDATA is not affected by overflows This bit is set by hardware. It can be cleared by software setting the ICDOFC bit in the HPDF_FLTyINTC register.
1	RCEF	Regular conversion end flag 0: No regular conversion has completed 1: A regular conversion has completed If RCEF=1, it means that the data may be read. This bit is set by hardware. It is cleared when the software or DMA reads HPDF_FLTyRDATA register.
0	ICEF	Inserted conversion end flag 0: No inserted conversion has completed 1: An inserted conversion has completed If ICEF=1, it means that its data may be read. This bit is set by hardware. It is cleared when the software or DMA reads HPDF_FLTyIDATA register.

Filter y interrupt flag clear register (HPDF_FLTyINTC)

Address offset: 0x10C + 0x80 * y, (y = 0, 3)

Reset value: 0x0000 0000

This register has to be accessed by word (32-bit).

Note: The bits of HPDF_FLTyINTC are always read as ‘0’.

31	30	29	28	27	26	25	24	23	22	21	20	19	18	17	16
MMFC[7:0]								CKLFC[7:0]							
rc_w1								rc_w1							

15	14	13	12	11	10	9	8	7	6	5	4	3	2	1	0
Reserved												RCDOFC	ICDOFC	Reserved	
												rc_w1	rc_w1		

Bits	Fields	Descriptions
31:24	MMFC[7:0]	Clear the malfunction monitor flag MMFC[x]=0: No effect MMFC[x]=1: Clear the malfunction monitor flag on channel x This bit is only available in HPDF_FTL0INTC register.
23:16	CKLFC[7:0]	Clear the clock loss flag

		CKLFC[x]=0: No effect CKLFC[x]=1: Clear the clock loss flag on channel x When the serial transceiver is not yet synchronized, the clock loss flag is set and cannot be cleared by CKLFC[7:0]. This bit is only available in HPDF_FTL0INTC register.
15:4	Reserved	Must be kept at reset value.
3	RCDOFC	Clear the regular conversion data overflow flag 0: No effect 1: Clear the RCDOF bit in the HPDF_FLTySTAT register
2	ICDOFC	Clear the inserted conversion data overflow flag 0: No effect 1: Clear the ICDOF bit in the HPDF_FLTySTAT register
1:0	Reserved	Must be kept at reset value.

Filter y inserted channel group selection register (HPDF_FLTyICGS)

Address offset: 0x110 + 0x80 * y, (y = 0, 3)

Reset value: 0x0000 0001

This register has to be accessed by word (32-bit).

31	30	29	28	27	26	25	24	23	22	21	20	19	18	17	16
Reserved															

15	14	13	12	11	10	9	8	7	6	15	4	3	2	1	0
Reserved								ICGSEL[7:0]							
											rw				

Bits	Fields	Descriptions
31:8	Reserved	Must be kept at reset value.
7:0	ICGSEL[7:0]	Injected channel group selection ICGSEL[x]=0: Channel x is not belongs to the inserted group ICGSEL[x]=1: Channel x belongs to the inserted group If SCMOD=1, each of the selected channels is converted, one after another. The priority conversion with lowest channel number. If SCMOD=0, then only one channel is converted from the selected channels, and the channel selection is moved to the next channel. When SCMOD=0, Writing ICGSEL will reset the channel selection to the lowest selected channel. At least one channel must always be selected for the inserted group. All writes that make ICGSEL[7:0]=0 are ignored.

Filter y sinc filter configuration register (HPDF_FLTySFCFG)

Address offset: 0x114 + 0x80 * y, (y = 0, 3)

Reset value: 0x0000 0000

This register has to be accessed by word (32-bit).

31	30	29	28	27	26	25	24	23	22	21	20	19	18	17	16
SFO[2:0]			Reserved			SFOR[9:0]									
rw						rw									

15	14	13	12	11	10	9	8	7	6	5	4	3	2	1	0
Reserved								IOR[7:0]							
								rw							

Bits	Fields	Descriptions
31:29	SFO[2:0]	Sinc filter order. 000: FastSinc filter type 001: $Sinc^1$ filter type 010: $Sinc^2$ filter type 011: $Sinc^3$ filter type 100: $Sinc^4$ filter type 101: $Sinc^5$ filter type 110~111: Reserved This bit can only be configured when FLTEN=0 in HPDF_FLTyCTL0 register.
28:26	Reserved	Must be kept at reset value.
25:16	SFOR[9:0]	Sinc filter oversampling ratio (decimation rate) 0 ~1023: Sinc filter oversampling ratio (decimation rate) SFOR= SFOR[9:0] +1. If SFOR [9:0] = 0 (SFOR=1), the filter will be bypass. This bit can only be configured when FLTEN=0 in HPDF_FLTyCTL0 register.
15:8	Reserved	Must be kept at reset value.
7:0	IOR[7:0]	Integrator oversampling ratio 0~255: Integrator oversampling ratio IOR=IOR[7:0]+1. The output data rate from the integrator will be decreased by this value. If IOR[7:0] = 0 (IOR=1), the integrator will be bypass. This bit can only be configured when FLTEN=0 in HPDF_FLTyCTL0 register.

Filter y inserted group conversion data register (HPDF_FLTyIDATA)

Address offset: 0x118 + 0x80 * y, (y = 0, 3)

Reset value: 0x0000 0000

This register has to be accessed by word (32-bit).

Note: Half-word accesses may be used to read only the MSB of conversion data. DMA can be used to read the data from this register. Reading this register also clears ICEF bit.

31	30	29	28	27	26	25	24	23	22	21	20	19	18	17	16
IDATA[23:8]															
r															

15	14	13	12	11	10	9	8	7	6	5	4	3	2	1	0
IDATA[7:0]								Reserved					ICCH[2:0]		
r														r	

Bits	Fields	Descriptions
31:8	IDATA[23:0]	Inserted group conversion data When each a channel in the inserted group is converted, the resulting data is stored in this field. The data is valid when ICEF=1. Reading this register clears the corresponding ICEF (in HPDF_FLTySTAT register).
7:3	Reserved	Must be kept at reset value.
2:0	ICCH[2:0]	Inserted channel most recently converted When each a channel in the inserted group is converted, ICCH is updated to indicate which channel was converted. Therefore, IDATA[23:0] holds the data that corresponds to the channel indicated by ICCH.

Filter y regular channel conversion data register (HPDF_FLTyRDATA)

Address offset: 0x11C + 0x80 * y, (y = 0, 3)
Reset value: 0x0000 0000

This register has to be accessed by half-word (16-bit). or word (32-bit).

Note: Half-word accesses may be used to read only the MSB of conversion data. Reading this register also clears RCEF bit.

31	30	29	28	27	26	25	24	23	22	21	20	19	18	17	16
RDATA[23:8]															
r															

15	14	13	12	11	10	9	8	7	6	5	4	3	2	1	0
RDATA[7:0]								Reserved			RCHPDT	Reserved	RCCH[2:0]		
r											r			r	

Bits	Fields	Descriptions
31:8	RDATA[23:0]	Regular channel conversion data When each regular conversion finishes, its data is stored in these bits. The data is valid when RCEF=1. Reading this register clears the corresponding RCEF (in HPDF_FLTySTAT register).
7:5	Reserved	Must be kept at reset value.
4	RCHPDT	Regular channel pending data

		Regular data in RDATA[23:0] was delayed due to an inserted channel trigger during the conversion
3	Reserved	Must be kept at reset value.
2:0	RCCH[2:0]	Regular channel most recently converted When each regular conversion finishes, RCCH[2:0] is updated to indicate which channel was converted. Thus RDATA[23:0] holds the data that corresponds to the channel indicated by RCCH[2:0].

Filter y threshold monitor high threshold register (HPDF_FLTyTMHT)

Address offset: 0x120 + 0x80 * y, (y = 0, 3)

Reset value: 0x0000 0000

This register has to be accessed by word (32-bit).

31	30	29	28	27	26	25	24	23	22	21	20	19	18	17	16
HTVAL[23:8]															
rw															

15	14	13	12	11	10	9	8	7	6	5	4	3	2	1	0
HTVAL[7:0]								Reserved				HTBSD[3:0]			
rw												rw			

Bits	Fields	Descriptions
31:8	HTVAL[23:0]	Threshold monitor high threshold value These bits are written by software to determine the high threshold for the threshold monitor. If TMFM=1, the higher 16 bits determine the 16-bit threshold as compared with the threshold monitor filter output. Bits HTVAL[7:0] are ignored.
7:4	Reserved	Must be kept at reset value.
3:0	HTBSD[3:0]	High threshold event break signal distribution HTBSD[i] = 0: Break signal is not distributed to high threshold event HTBSD[i] = 1: Break signal x is distributed to high threshold event

Filter y threshold monitor low threshold register (HPDF_FLTyTMLT)

Address offset: 0x124 + 0x80 * y, (y = 0, 3)

Reset value: 0x0000 0000

This register has to be accessed by word (32-bit).

31	30	29	28	27	26	25	24	23	22	21	20	19	18	17	16
LTVAL[23:8]															
rw															

15	14	13	12	11	10	9	8	7	6	5	4	3	2	1	0
LTVAL[7:0]								Reserved				LTBSD[3:0]			

rw rw

Bits	Fields	Descriptions
31:8	LTVAL[23:0]	Threshold monitor low threshold value. These bits are written by software to determine the low threshold for the threshold monitor. If TMFM=1, the higher 16 bits determine the 16-bit threshold as compared with the threshold monitor filter output. Bits LTVAL[7:0] are ignored.
7:4	Reserved	Must be kept at reset value.
3:0	LTBSD[3:0]	Low threshold event break signal distribution. LTBSD[i] = 0: Break signal is not distributed to low threshold event. LTBSD[i] = 1: Break signal i is distributed to low threshold event.

Filter y threshold monitor status register (HPDF_FLTyTMSTAT)

Address offset: 0x128 + 0x80 * y, (y = 0, 3)
Reset value: 0x0000 0000

This register has to be accessed by word (32-bit).

Note: All the bits of HPDF_FLTyTMSTAT are automatically reset when FLTEN=0.

31	30	29	28	27	26	25	24	23	22	21	20	19	18	17	16
Reserved															

15	14	13	12	11	10	9	8	7	6	5	4	3	2	1	0
HTF[7:0]								LTF[7:0]							
r								r							

Bits	Fields	Descriptions
31:16	Reserved	Must be kept at reset value.
15:8	HTF[7:0]	Threshold monitor high threshold flag HTF[x]=0: No high threshold error on channel x HTF[x]=1: High threshold error on channel x It is set by hardware. It can be cleared by software setting the corresponding HTFC[7:0] bit in the HPDF_FLTyTMFC register.
7:0	LTF[7:0]	Threshold monitor low threshold flag LTF[x]=1: No low threshold error on channel x LTF[x]=1: Low threshold error on channel x It is set by hardware. It can be cleared by software setting the corresponding LTFC[7:0] bit in the HPDF_FLTyTMFC register.

Filter y threshold monitor flag clear register (HPDF_FLTyTMFC)

Address offset: 0x12C + 0x80 * y, (y = 0, 3)

Reset value: 0x0000 0000

This register has to be accessed by word (32-bit).

31	30	29	28	27	26	25	24	23	22	21	20	19	18	17	16
Reserved															

15	14	13	12	11	10	9	8	7	6	5	4	3	2	1	0
HTFC[7:0]								LTFC[7:0]							
rc_w1								rc_w1							

Bits	Fields	Descriptions
31:16	Reserved	Must be kept at reset value.
15:8	HTFC[7:0]	Clear the threshold monitor high threshold flag HTFC[y]=0: No effect HTFC[y]=1: Clear the threshold monitor high threshold flag on channel x
7:0	LTFC[7:0]	Clear the threshold monitor low threshold flag LTFC[y]=0: No effect LTFC[y]=1: Clear the threshold monitor low threshold flag on channel x

Filter y extremes monitor maximum register (HPDF_FLTyEMMAX)

Address offset: 0x130 + 0x80 * y, (y = 0, 3)

Reset value: 0x8000 0000

This register has to be accessed by word (32-bit).

31	30	29	28	27	26	25	24	23	22	21	20	19	18	17	16
MAXVAL[23:8]															
rc_r															

15	14	13	12	11	10	9	8	7	6	5	4	3	2	1	0
MAXVAL[7:0]								Reserved					MAXDC[2:0]		
rc_r														r	

Bits	Fields	Descriptions
31:8	MAXVAL[23:0]	Extremes monitor maximum value These bits are set by hardware and indicate the highest value of channel converted by HPDF_FLTy. These bits can be reset by reading of this register.
7:3	Reserved	Must be kept at reset value.
2:0	MAXDC[2:0]	Extremes monitor maximum data channel. This bits indicate the channel on which the data is stored into MAXVAL[23:0]. It can

be cleared by reading of this register.

Filter y extremes monitor minimum register (HPDF_FLTyEMMIN)

Address offset: 0x134 + 0x80 * y, (y = 0, 3)

Reset value: 0x7FFF FF00

This register has to be accessed by word (32-bit).

31	30	29	28	27	26	25	24	23	22	21	20	19	18	17	16
MINVAL[23:8]															
rs															

15	14	13	12	11	10	9	8	7	6	5	4	3	2	1	0
MINVAL[7:0]								Reserved					MINDC[2:0]		
rs														rc_r	

Bits	Fields	Descriptions
31:8	MINVAL[23:0]	Extremes monitor minimum value These bits are set by hardware and indicate the lowest value converted by HPDF_FLTy. These bits can be reset by reading of this register.
7:3	Reserved	Must be kept at reset value.
2:0	MINDC[2:0]	Extremes monitor minimum data channel This bit indicate the channel on which the data is stored into MINVAL[23:0]. It can be cleared by reading of this register.

Filter y conversion timer register (HPDF_FLTyCT)

Address offset: 0x138 + 0x80 * y, (y = 0 to 3)

Reset value: 0x0000 0000

This register has to be accessed by word (32-bit).

31	30	29	28	27	26	25	24	23	22	21	20	19	18	17	16
CTCNT[31:16]															
r															

15	14	13	12	11	10	9	8	7	6	5	4	3	2	1	0
CTCNT[15:4]												Reserved			
r															

Bits	Fields	Descriptions
31:4	CTCNT[27:0]	conversion time counted by HPDFCLK t = CNVCNT[27:0] / $f_{HPDFCLK}$ The timer has an input clock (system clock $f_{HPDFCLK}$) from the HPDF clock. The conversion time measurement starts at the beginning of each conversion and stops when the conversion is complete (the interval between the first and last serial

		sample). Conversion time measurement stops and CNVCNT[27:0] = 0 only when the filter is bypassed (FOSR[9:0] = 0). The times counted are:
		if FAST=0 (or first conversion in continuous mode if FAST=1):
		for Sincx filters: t = [SFOR * (IOR-1 + FORD) + SFO] / f_{CKIN}.
		for FastSinc filter: t = [SFOR * (IOR-1 + 4) + 2] / f_{CKIN}.
		if FAST=1 in continuous mode (except first conversion):
		t = [SFOR * IOR] / f_{CKIN}.
		in case if FOSR = SFOR [9:0]+1 = 1: CNVCNT = 0 (counting is stopped, conversion time: t = IOR / f_{CKIN})
		where f_{CKIN} is the channel input clock frequency (on a given channel CKINx pin) or the input data rate in the case of parallel data input (from CPU/DMA writes)
		Note: The timer will also counts this interrupt time when a conversion is interrupted (for example by disabling/enabling the selected channel).

3:0	Reserved	Must be kept at reset value.

46. Real-time decryption (RTDEC)

46.1. Overview

The real-time decryption (RTDEC) allows to decrypt in real-time according to information of the read request address. RTDEC can configure four independent and different encrypted areas. And each area has the option of execute-only or execute-never enforcement to choose.

For a good real-time performance, RTDEC uses the counter (CTR) mode of AES-128. Since RTDEC using AES-128 in counter mode, the whole area has to be re-encrypted with an updated cryptographic context (key or initialization vector) when the data or code of one encrypted area is changed. This feature makes RTDEC only suitable for decrypting read-only content, like that stored in external flash.

Note: It is necessary to access the external read-only memory using the memory map mode when RTDEC is used with Octal-SPI (OSPI). It is important to know that CPU memories and RTDEC follow little endian notation, and AES hardware accelerator follows big endian notation.

46.2. Characteristics

- Software configurable encrypted areas up to 4.
- Granularity is 4096 bytes in RTDEC programmed areas.
- Area configuration can be locked.
- Optional decryption modes: execute-only or execute-never.
- Every area can be configured the independent 128-bits key, 16-bits area firmware version, and 64-bits application-defined nonce. If the user performed an encryption, one or more of those should be modified.
- Confidentiality and completeness protection for encryption keys.
  - 128-bits key registers are write-only, with software locking mechanism
  - 8-bits CRC is calculated automatically by hardware, and it's used as the public key information
- The real-time decryption when OSPI memory-mapped read operations.
  - Use of AES-128 in CTR mode
  - Support key stream FIFO with depth 4
  - Support various read size
  - Decryption / encryption with physical address of the reads
- Support for GD32 OSPI pre-fetching mechanism.

46.3. Function overview

The RTDEC (real-time decryption) module allows real-time decryption of the Arm® AXI or

AHB traffic based on the read request address information. Original purpose of RTDEC is to protect the confidentiality of read-only firmware libraries stored in external SPI NOR Flash devices. The RTDEC performs real-time decryption during OSPI memory-mapped read operation.

46.3.1. RTDEC real-time decryption introduction

Figure 46-1. RTDEC block diagram (for RTDEC0 and RTDEC1) shows the block diagram of the RTDEC.

Figure 46-1. RTDEC block diagram (for RTDEC0 and RTDEC1)

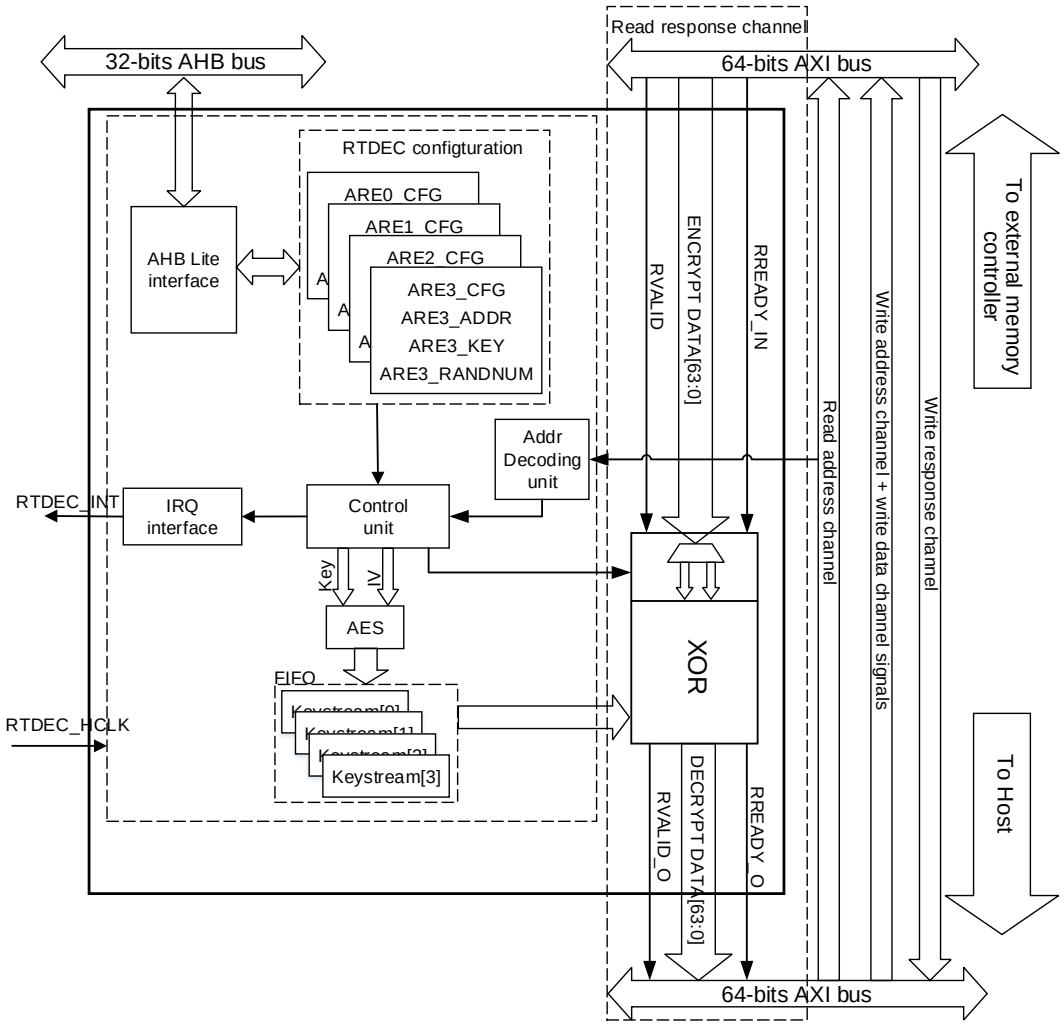

Note: RTDEC_HCLK is RTDEC clock input from AHB clock, RTDEC_INT is RTDEC global interrupt.

46.3.2. RTDEC real-time decryption introduction

RTDEC typical usage

RTDEC fundamental purpose is to protect the secrecy of the execute-only code. The code

can be the execute-only firmware library is executed from external flash memory. RTDEC can also protect “code + data library” (which is read only), and data library (which is read only and execute-never) stored in external flash memory.

In order to protect the completeness of the decryption keys and also to protect other RTDEC configurations against software denial of services attacks, RTDEC provides the configuration register locking mechanism.

It is necessary to access the external read-only memory using the memory map mode when RTDEC is used with OSPI.

RTDEC principle

The principle of RTDEC is to analyze all read address channel transactions between the MCU and a peripheral, the read address channel transactions is on the AXI interconnect bus, like the OSPI controller.

The control logic will trigger a key stream computation if the read request is within one of the four areas programmed in RTDEC. The key stream is computed by RTDEC using AES-128 in counter mode. Any accesses outside the RTDEC programmed areas belong to a non-encrypted area. Granularity for the area determination is 4KB. That is, size of the RTDEC programmed areas is an integer multiple of 4KB.

Each RTDEC areas can be programmed by registers AREx_CFG, AREx_SADDR, AREx_EADDR, AREx_NONCE and AREx_KEY, where x=0 to 3. It is could be configured whether the content of the RTDEC area is code (execute-only), data (execute-never) or both through MODE[1:0] (in the register AREx_CFG).

Note: RTDEC does not prevent overlapping of areas but it is an invalid programming, and the user should try to avoid areas overlapping in application software.

When RTDEC decrypts incremental or wrap bursts they should not cross the 4096-byte aligned address boundaries. RTDEC cannot decrypt part data of an AXI transaction.

46.3.3. Decryption with AES-128 in counter mode

Figure 46-2. Decryption flow with AES-128 in CTR mode shows RTDEC how to use Advanced Encryption Standard (AES) algorithm in counter mode. AES is announced by Federal Information Processing Standards Publication 197, November 26, 2001. And it is specified by NIST in ***Special Publication 800-38A, Recommendation for Block Cipher Modes of Operation***.

Figure 46-2. Decryption flow with AES-128 in CTR mode

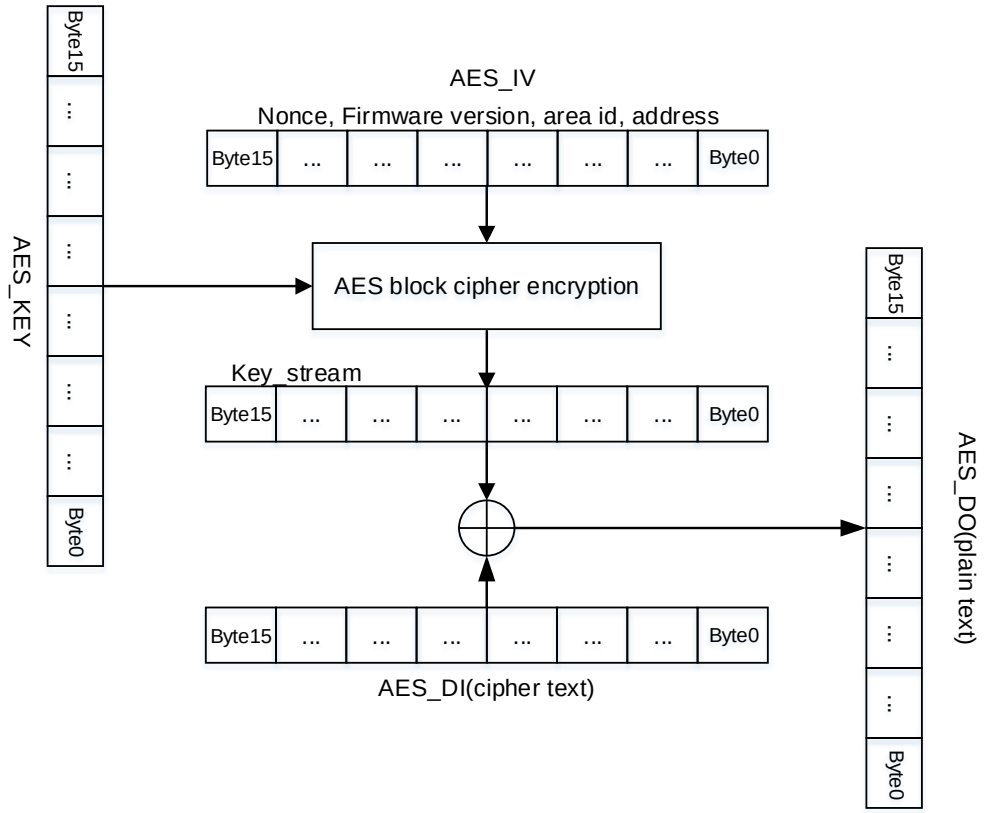

During decryption, a special key steam information will be computed by using AES block cipher for every 128-bit data block. The AES_IV and AES_KEY are defined as below:

1. The initialization vector AES_IV[127:0] = RTDEC_AREx_NONCE[63:0] || 16′b 0000 0000 0000 0000 || RTDEC_AREx_CFG[31:16] || 2′b 00 || x || ReadAddress[31:4].
2. The key material AES_KEY[127:0] = RTDEC_AREx_KEY3[31:0] || RTDEC_AREx_KEY2[31:0] || RTDEC_AREx_KEY1[31:0] || RTDEC_AREx_KEY0[31:0].

Note: Above x (x = 2′b 00 to 2′b 11) is the Area ID of the selected encrypted area.

After the 128-bit key stream is computed, the 128-bit clear text is produced by 128-bit key stream XORed with 128-bit cipher text data.

The 128-bit AES_DI and AES_DO data blocks are defined following the rule below: AES_Dx[127:0] = AXI_word(@+0x8)[63:0] || AXI_word(@)[63:0]. Where @ is the hexadecimal address, and it is used to compute the key stream.

When the read request is within a non-encrypted area, or in an encrypted area but the decryption is not enabled, the 128-bit AXI data is not changed.

46.3.4. RTDEC configuration

RTDEC initialization process

The trusted initialization of RTDEC registers is an important aspect when use RTDEC.

Because it involves secret keys initialization and critical options like MODE[1:0] bits initialization.

There are two solutions of RTDEC trusted initialization are introduced here below.

Note: Those sequences are suggested for production code. Because it is not always recommended to set bit ARE_K_LK or ARE_CFG_LK (lock the key or the area configuration) during code development.

Writes to area configuration registers are effective when the bit ARE_CFG_LK is 0, even if the bit ARE_EN is 1.

One key for all areas initialization solution

In this solution, the secret key used to decrypt the RTDEC four protected areas can belong to one entity.

The follow configuration sequence of RTDEC is recommended:

- Write the correct MODE[1:0] value in RTDEC_AREx_CFG register (where x=0 to 3).
- Program RTDEC_AREx_KEY0...3 registers (where x=0 to 3) using the sequence described in ARE_K_CRC (make sure to have a valid CRC). Note that key registers are write only, read from them is illegal.
- Check the key CRC. If it's ok, set bit ARE_K_LK in RTDEC_AREx_CFG register (where x=0 to 3). ARE_K_LK bit cannot be cleared, that is the key registers in this area x are no more changed.
- While you have an area x to decrypt do it. It is not necessarily have to be performed by the entity (that owns the decryption keys) when this work does.
  - Check if the key CRC matches to the encrypted binary stored in the area.
  - Configure the detailed information matching to this binary. The information are nonce, firmware version, start and end address.
  - Set bit ARE_EN in RTDEC_AREx_CFG (where x=0 to 3) to enable decryption of this area.
  - Set bit ARE_CFG_LK in RTDEC_AREx_CFG (where x=0 to 3). This bit cannot be cleared, that is the area configuration is no more changed.

Note: For a given area, the key registers and associated CRC are cleared by hardware when MODE[1:0] bits are changed. So MODE[1:0] bits must be written firstly before other operating, and after programming RTDEC_AREx_KEY0...3 (where x=0 to 3) registers the MODE[1:0] bits must not be modified.

One key for one area initialization solution

In this solution, the secret key used to decrypt the RTDEC one (or more) protected areas can belong to one entity.

The follow configuration sequence of RTDEC is recommended.

While you have an area x to decrypt do it, such as x is 0. It is have to be performed by the

entity (that owns the corresponding decryption key) when this work does.

- Write the correct MODE[1:0] value in RTDEC_ARE0_CFG register.
- Program RTDEC_ARE0_KEY0...3 registers using the sequence described in ARE_K_CRC (read from area configuration register to have a valid CRC). Note that key registers are write only, read from them is illegal.
- Check the key CRC. If it's ok, set bit ARE_K_LK in RTDEC_ARE0_CFG register. This bit cannot be cleared, that is the key registers are no more changed.
- Configure the detailed information matching to the protected firmware. The information are nonce, firmware version, start and end address.
- Set bit ARE_EN in RTDEC_ARE0_CFG to enable decryption of this area.
- Set bit ARE_CFG_LK in RTDEC_ARE0_CFG. This bit cannot be cleared, that is the area configuration is no more changed.

Note: For a given area, the key registers and associated CRC are cleared by hardware when MODE[1:0] bits are changed. So MODE[1:0] bits must be written firstly before other operating, and after programming RTDEC_ARE0_KEY0...3 registers the MODE[1:0] bits must not be modified.

Reset of RTDEC

The correct key loading sequence described in ***RTDEC initialization process*** must be performed when each time RTDEC is reset (in this case, bit ARE_K_CRC of RTDEC_AREx_CFG is 0). When the RTDEC is reset by hardware we suggested that user's application software to guarantee the correct key loading sequence.

46.3.5. RTDEC error management

RTDEC could manages below errors automatically,

- Illegal read to RTDEC_AREx_KEY0...3 registers. Where x is 0 to 3.
- While bit ARE_CFG_LK or ARE_K_LK in RTDEC_AREx_CFG is set, illegal write to RTDEC_AREx_KEY0...3 registers. Where x is 0 to 3.
- While bit ARE_CFG_LK in RTDEC_AREx_CFG is set, illegal write to RTDEC_AREx_CFG, RTDEC_AREx_SADDR, RTDEC_AREx_EADDR or RTDEC_AREx_NONCE0/1 registers. Where x is 0 to 3.
- While MODE[1:0] is 2'b00, illegal read to an execute-only area. While MODE[1:0] is 2'b01, illegal execution request to an execute-never area. These illegal requests return 0, without bus error.
- Key error: When an abort event happened, the key register will be cleared. At this time if there are some read requests, these requests will return 0, without bus error. The abort event maybe tamper detection, unauthorized debug connection, untrusted boot or SPC level low to no protection demotion.

If the bit SECIE, ECONEIE or KEIE is set, one or more of above errors occurs will generate an interrupt. For details refer to ***RTDEC interrupts***.

Note: RTDEC keys must be initialized again after a key error is occurred. And if registers are locked RTDEC might be also needed reset.

46.4. RTDEC interrupts

RTDEC can generate three independent maskable interrupt events, the interrupt flag is set after following security events:

- Illegal read or write access to keys (SECEF flag), refer to ***Interrupt flag register (RTDEC_INTF)***.
- Illegal write to an area's configuration register while ARE_CFG_LK=1 (SECEF flag), refer to ***Interrupt flag register (RTDEC_INTF)***.
- While MODE[1:0] is 2'b00, read access to an execute-only area. While MODE[1:0] is 2'b01, execute access to a execute-never data area. Both are triggering the ECONEF flag.
- Key error (encrypted area read as zero), triggering the KEF flag. Refer to ***Interrupt flag register (RTDEC_INTF)***.

All of the interrupt events are ORed together before being sent to the interrupt controller, so the RTDEC can only generate a single interrupt request to the controller at any given time.

Below block diagram illustrates the RTDEC module interrupt connection

Figure 46-3. RTDEC interrupt mapping diagram

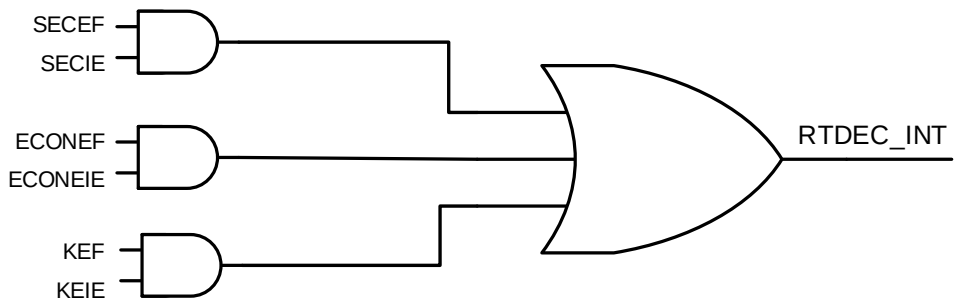

By setting corresponding SECIE, ECONEIE or KEIE bits in RTDEC_INTEN register, you can enable or disable RTDEC interrupt sources. It is shown as ***Table 46-1. RTDEC interrupt requests***. Status of the interrupt event is found in RTDEC_INTF register, and the interrupt flag can be cleared using RTDEC_INTC register.

Table 46-1. RTDEC interrupt requests

Interrupt event	Event flag	Enable control bit
Security error	SECEF	SECIE
Execute-only, Execute-never error	ECONEF	ECONEIE
Key error	KEF	KEIE

46.5. Registers definition

RTDEC0 base address: 0x5200 B800

RTDEC1 base address: 0x5200 BC00

46.5.1. Area x configuration register (RTDEC_AREx_CFG)

Address offset: 0x20 + 0x30 * x (x = 0 to 3)

Reset value: 0x0000 0000

This register has to be accessed by word (32-bit).

31	30	29	28	27	26	25	24	23	22	21	20	19	18	17	16
ARE_FMVER[15:0]															
rw															

15	14	13	12	11	10	9	8	7	6	5	4	3	2	1	0
ARE_K_CRC[7:0]								Reserved		MODE[1:0]		Reserved	ARE_K_LK	ARE_CFGLK	ARE_EN
r										rw			rs	rs	rw

Bits	Fields	Descriptions
31:16	ARE_FMVER[15:0]	Area firmware version bits These bits cannot be written when the corresponding ARE_EN bit is set in the RTDEC_AREx_CFG register.
15:8	ARE_K_CRC[7:0]	8-bit CRC of area key bits As ARE_K_LK = 0, if user loads the key of the area in this exact sequence: KEY0 -> KEY1 -> KEY2 -> KEY3, the ARE_K_CRC[7:0] will automatically computed by hardware. When a new valid sequence is initiated, a new computation starts immediately, and ARE_K_CRC[7:0] is read as 0 until a valid sequence is completed. When ARE_K_LK=1, ARE_K_CRC remains unchanged until the next reset. The standard CRC-8-CCITT algorithm X8 + X2 + X + 1 is used for CRC calculation, the calculation result is an 8-bit checksum. These bits are read only. **Note:** When the last bit of the key has been written, CRC information is updated.
7:6	Reserved	Must be kept at reset value.
5:4	MODE[1:0]	RTDEC mode bits These bits configure the RTDEC operating mode for this area: 00: Only decrypt code accesses. 01: Only decrypt data accesses. 10: decrypt all read accesses (code or data). 11: Reserved. When the MODE[1:0] bits are changed, the area's key and associated CRC are

		automatically cleared.
3	Reserved	Must be kept at reset value.
2	ARE_K_LK	Area key lock bit 0: RTDEC_AREx_KEY registers write is enabled. 1: RTDEC_AREx_KEY registers write is disabled. ARE_K_CRC[7:0] is also locked. This bit is set by software only once. It cannot be cleared until a RTDEC reset. When this bit is set, it disables write access to this area key registers.
1	ARE_CFG_LK	Area configure lock bit 0: RTDEC_AREx_CFG, RTDEC_AREx_SADDR, RTDEC_AREx_EADDR, RTDEC_AREx_NONCEy (y = 0, 1), RTDEC_AREx_KEYy (y = 0 to 3) registers write is enabled. 1: RTDEC_AREx_CFG, RTDEC_AREx_SADDR, RTDEC_AREx_EADDR, RTDEC_AREx_NONCE, RTDEC_AREx_KEY registers write is disabled. This bit is set by software only once. It cannot be cleared until a RTDEC reset. When this bit is set ARE_K_LK bit is forced to 1, and it disables write access to this area configuration, start address, end address and nonce registers.
0	ARE_EN	Area real-time decryption enable bit 0: Area real-time decryption is disabled. 1: Area real-time decryption is enabled. The area configure information must be valid before this bit is set.

46.5.2. Area x start address register (RTDEC_AREx_SADDR)

Address offset: 0x24 + 0x30 * x (x = 0 to 3)

Reset value: 0x0000 0000

This register has to be accessed by word (32-bit).

31	30	29	28	27	26	25	24	23	22	21	20	19	18	17	16
ARE_SADDR[31:16]															
rw															

15	14	13	12	11	10	9	8	7	6	5	4	3	2	1	0
ARE_SADDR[15:0]															
rw															

Bits	Fields	Descriptions
31:0	ARE_SADDR[31:0]	Area x AXI start address bits These bits should be written before the corresponding ARE_EN is set in the RTDEC_AREx_CFG register. Writing these bits is invalid if the ARE_CFG_LK bit is set in the RTDEC_AREx_CFG register. **Note:** The first 12 bits (LSB) and the last 4 bits (MSB) are ignored when determining the area.

The 4 MSB bits and the 12 LSB bits return 0, when read this register.

46.5.3. Area x end address register (RTDEC_AREx_EADDR)

Address offset: 0x28 + 0x30 * x (x = 0 to 3)

Reset value: 0x0000 0FFF

This register has to be accessed by word (32-bit).

31	30	29	28	27	26	25	24	23	22	21	20	19	18	17	16
ARE_EADDR[31:16]															
rw															

15	14	13	12	11	10	9	8	7	6	5	4	3	2	1	0
ARE_EADDR[15:0]															
rw															

Bits	Fields	Descriptions
31:0	ARE_EADDR[31:0]	Area x AXI end address bits These bits should be written before the corresponding ARE_EN is set in the RTDEC_AREx_CFG register. And ARE_EADDR cannot be less than ARE_SADDR. Writing these bits is invalid if the ARE_CFG_LK bit is set in the RTDEC_AREx_CFG register. **Note:** The first 12 bits (LSB) and the last 4 bits (MSB) are ignored when determining the area. The 4 MSB bits return 0 and the 12 LSB bits return 1, when read this register.

46.5.4. Area x nonce register 0 (RTDEC_AREx_NONCE0)

Address offset: 0x2C + 0x30 * x (x = 0 to 3)

Reset value: 0x0000 0000

This register has to be accessed by word (32-bit).

31	30	29	28	27	26	25	24	23	22	21	20	19	18	17	16
ARE_NONCE0[31:16]															
rw															

15	14	13	12	11	10	9	8	7	6	5	4	3	2	1	0
ARE_NONCE0[15:0]															
rw															

Bits	Fields	Descriptions
31:0	ARE_NONCE0[31:0]	Area x nonce address bits, ARE_NONCE[31:0]. These bits should be written before the corresponding ARE_EN bit is set in the RTDEC_AREx_CFG register. Writing these bits is invalid if the ARE_CFG_LK bit is set in the

RTDEC_AREx_CFG register.

46.5.5. Area x nonce register 1 (RTDEC_AREx_NONCE1)

Address offset: 0x30 + 0x30 * x (x = 0 to 3)

Reset value: 0x0000 0000

This register has to be accessed by word (32-bit).

31	30	29	28	27	26	25	24	23	22	21	20	19	18	17	16
ARE_NONCE1[31:16]															
rw															

15	14	13	12	11	10	9	8	7	6	5	4	3	2	1	0
ARE_NONCE1[15:0]															
rw															

Bits	Fields	Descriptions
31:0	ARE_NONCE1[31:0]	Area x nonce address bits, ARE_NONCE[63:32]. Refer to ARE_NONCE0[31:0] description

46.5.6. Area x key register 0 (RTDEC_AREx_KEY0)

Address offset: 0x34 + 0x30 * x (x = 0 to 3)

Reset value: 0x0000 0000

This register has to be accessed by word (32-bit).

31	30	29	28	27	26	25	24	23	22	21	20	19	18	17	16
ARE_KEY0[31:16]															
w															

15	14	13	12	11	10	9	8	7	6	5	4	3	2	1	0
ARE_KEY0[15:0]															
w															

Bits	Fields	Descriptions
31:0	ARE_KEY0[31:0]	Area x key bits, ARE_KEY[31:0]. These bits should be written before the corresponding ARE_EN bit is set in the RTDEC_AREx_CFG register. Writing these bits is invalid if the ARE_CFG_LK bit or ARE_K_LK bit is set in the RTDEC_AREx_CFG register. When read these bits it returns 0. **Note:** RTDEC_AREx_KEY0 register and associated ARE_K_CRC are erased when application successfully changes bits MODE[1:0] in RTDEC_AREx_CFG register.

46.5.7. Area x key register 1 (RTDEC_AREx_KEY1)

Address offset: 0x38 + 0x30 * x (x = 0 to 3)

Reset value: 0x0000 0000

This register has to be accessed by word (32-bit).

31	30	29	28	27	26	25	24	23	22	21	20	19	18	17	16
ARE_KEY1[31:16]															
w															

15	14	13	12	11	10	9	8	7	6	5	4	3	2	1	0
ARE_KEY1[15:0]															
w															

Bits	Fields	Descriptions
31:0	ARE_KEY1[31:0]	Area x key bits, ARE_KEY[63:32]. Refer to RTDEC_ARE_KEY0[31:0] description

46.5.8. Area x key register 2 (RTDEC_AREx_KEY2)

Address offset: 0x3C + 0x30 * x (x = 0 to 3)

Reset value: 0x0000 0000

This register has to be accessed by word (32-bit).

31	30	29	28	27	26	25	24	23	22	21	20	19	18	17	16
ARE_KEY2[31:16]															
w															

15	14	13	12	11	10	9	8	7	6	5	4	3	2	1	0
ARE_KEY2[15:0]															
w															

Bits	Fields	Descriptions
31:0	ARE_KEY2[31:0]	Area x key bits, ARE_KEY[95:64]. Refer to RTDEC_ARE_KEY0[31:0] description

46.5.9. Area x key register 3 (RTDEC_AREx_KEY3)

Address offset: 0x40 + 0x30 * x (x = 0 to 3)

Reset value: 0x0000 0000

This register has to be accessed by word (32-bit).

31	30	29	28	27	26	25	24	23	22	21	20	19	18	17	16
ARE_KEY3[31:16]															
w															

15	14	13	12	11	10	9	8	7	6	5	4	3	2	1	0
ARE_KEY3[15:0]															
w															

Bits	Fields	Descriptions
31:0	ARE_KEY3[31:0]	Area x key bits, ARE_KEY[127:96]. Refer to RTDEC_ARE_KEY0[31:0] description

46.5.10. Interrupt flag register (RTDEC_INTF)

Address offset: 0x300

Reset value: 0x0000 0000

This register has to be accessed by word (32-bit).

31	30	29	28	27	26	25	24	23	22	21	20	19	18	17	16
reserved															

15	14	13	12	11	10	9	8	7	6	5	4	3	2	1	0
reserved													KEF	ECONEF	SECEF
													r	r	r

Bits	Fields	Descriptions
31:3	Reserved	Must be kept at reset value.
2	KEF	Key error interrupt flag 0: No key error is detected. 1: Key error is detected. Read access detected on an enabled encrypted area after an abort event. An interrupt will occur if the KEIE bit is set in RTDEC_INTEN. This bit is set by hardware, when a read access occurs on any encrypted area following the reset of the key registers by an abort event (tamper detection, unauthorized debugger connection, untrusted boot, SPC level low to no protection demotion). Cleared by writing 1 to the KEC bit in the RTDEC_INTC register. Any subsequent read to any enabled encrypted region returns 0 after KEF bit is set. It remains until RTDEC keys are initialized again.
1	ECONEF	Execute-only or execute-never error interrupt flag 0: No execute-only error or execute-never error is detected. 1: Execute-only error or execute-never error is detected. Read access detected on an area with MODE[1:0] set to 00, or execute access detected on an area with MODE [1:0] set to 01. An interrupt will occur if bit ECONEIE is set in RTDEC_INTEN register. Set by hardware, when a read access but not an instruction fetch is detected on any encrypted area with MODE[1:0] set to 00. It is also set when an instruction fetch but not a read access is detected on any encrypted area with MODE[1:0] set

		to 01. Cleared by writing 1 to the ECONEC bit in the RTDEC_INTC register. If the access is illegal, RTDEC returns 0.
0	SECEF	Security error interrupt flag 0: No security error is detected. 1: Security error is detected. An interrupt will occur if SECEIE bit is set in RTDEC_INTEN register. Set by hardware, when at least one security error has been detected (illegal access to keys, illegal write on locked configuration). Cleared by writing 1 to SECEC bit in the RTDEC_INTC register.

46.5.11. Interrupt flag clear register (RTDEC_INTC)

Address offset: 0x304

Reset value: 0x0000 0000

This register has to be accessed by word (32-bit).

31	30	29	28	27	26	25	24	23	22	21	20	19	18	17	16
reserved															

15	14	13	12	11	10	9	8	7	6	5	4	3	2	1	0
reserved													KEC	ECONEC	SECEC
													w	w	w

Bits	Fields	Descriptions
31:3	Reserved	Must be kept at reset value.
2	KEC	Key error flag clear 0: No effect 1: Clear key error flag **Note:** To be able to read or execute again any encrypted region, RTDEC key registers should properly reinitialized but not just clear KEF.
1	ECONEC	Execute-only or execute-never error flag clear 0: No effect 1: Clear execute-only or execute-never error flag
0	SECEC	Security error interrupt flag 0: No effect 1: Clear security error flag

46.5.12. Interrupt enable register (RTDEC_INTEN)

Address offset: 0x308

Reset value: 0x0000 0000

This register has to be accessed by word (32-bit).

31	30	29	28	27	26	25	24	23	22	21	20	19	18	17	16
reserved															

15	14	13	12	11	10	9	8	7	6	5	4	3	2	1	0
reserved													KEIE	ECONEIE	SECIE
													rw	rw	rw

Bits	Fields	Descriptions
31:3	Reserved	Must be kept at reset value.
2	KEIE	Enable bit for key error interrupt Software set and cleared 0: Disable key error interrupt 1: Enable key error interrupt
1	ECONEIE	Enable bit for execute-only or execute-never error interrupt Software set and cleared 0: Disable execute-only or execute-never error interrupt 1: Enable execute-only or execute-never error interrupt
0	SECEIE	Enable bit for security error interrupt Software set and cleared 0: Disable security error interrupt 1: Enable security error interrupt

47. Filter arithmetic accelerator (FAC)

47.1. Overview

The filter arithmetic accelerator unit consist of multiplier, accumulator and address generation logic, so as to index vector elements stored in local memory. Circular buffering is valid for both input and output, which allows to realize finite impulse response (FIR) filters and infinite impulse response (IIR) filters. The unit support CPU to be free from frequent or lengthy filtering operations, compared with software implementation, it can accelerate calculations and the processing speed of time critical tasks.

47.2. Characteristics

- Fixed or float multiplier and accumulator.
- 256 x 32-bit local memory.
- 16-bit fixed-point or 32-bit float point input and output.
- Up to three buffers, two input buffers and one output buffer.
- Buffer can be circular.
- FIR and IIR can be realized.
- Vector functions support convolution, Dot product, correlation functions.
- Data can be read and written through DMA.

47.3. Function overview

47.3.1. General description

The unit can be configured based on fixed point multiplier and accumulator or float point multiplier and accumulator. Two 16-bit input signed data or 32-bit input float data from local memory are taken to MAC, they are multiplied together and added to the accumulator. A set of pointers, which could be incremented, decremented and loaded or reset by hardware, index the address of the input data in memory. Built-in sequencer arranges control the pointer and MAC operations to perform the requested operation in order.

Figure 47-1 FAC structure diagram

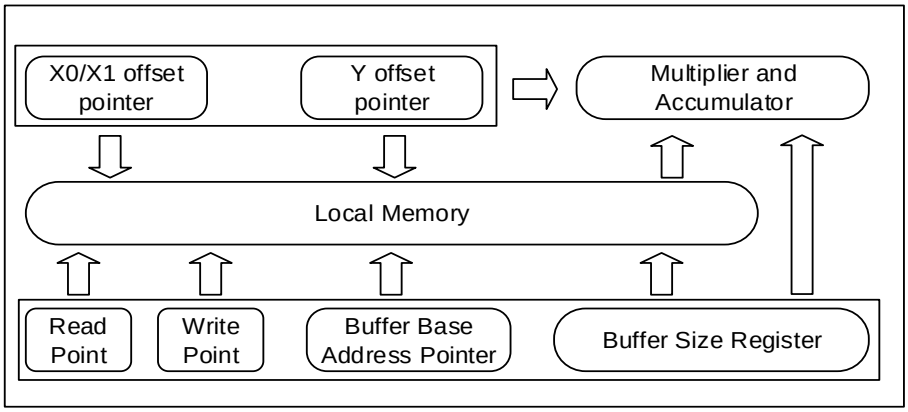

The processor or DMA controller load two input vectors into the local memory to calculate a dot product, select and start the requested operation. The elements of input vector is extracted from memory, multiplied together and then accumulated the multiplier output together. After processing the requested operation, the local memory is used to store the contents of the accumulator, the processor or DMA can access the corresponding address.

The finite impulse response filter operation repeatedly calculates the dot product, which refer to the coefficient data and a input sample data, along with discarding the least recent sample and adding a new sample.

The IIR filter calculates the product of the feedback coefficient and the previous output value, and adds the calculated result to the FIR convolution result to obtain the final filtered output.

47.3.2. Local memory and buffers

The unit contains 256 x 32 bit memory which can be read and write. X0 buffer and X1 buffer save the input values,and Y buffer saves the output values.

The locations of the buffers are specific as follows: x0_base, the X0 buffer base address, x1_base, the X1 buffer base address, y_base, the Y buffer base address.

The sizes of the buffers are specific as follows: x0_buf_size, the number of word allocated to the X0 buffer, x1_buf_size, the number of word addresses allocated to the X1 buffer, y_buf_size, the number of word addresses allocated to the Y buffer. Above parameters could be configured in corresponding register.

Through using the initialization functions, the X0 buffer, X1 buffer and Y buffer can be initialized. The data is transferred to the target buffer, which is indicated by a write pointer. The write pointer increase along with each new write, if the pointer arrives the end of the buffer space, the pointer returns to the base address. Thus, the vector element is loaded before operation, it can also be used to load the filter coefficients and initialize the filter.

Buffer configuration registers configure the buffer sizes and base address. The filter function specifies required buffer size for each function, while the base address in the local memory could be configured optionally, therefore, considering that all buffers address from 0x00 to

0xFF, in other words, base address add buffer size should be less than 256. The location and size of the buffers lack of constraint, even they can overlap completely. Do not overlap the buffer of filter function to avoid abnormal operation.

An optional headroom is added to the buffer size if circular buffer operation is required, Moreover, for regulating the DMA or CPU activity, it is necessary to set watermark level. The headroom value and watermark level should be selected according to the actual application.

Usually, for more data throughput, the input buffer always has data, the headroom is slightly greater than the watermark level, so as to allow interrupt or DMA latency. On the other side, if the input data providing speed is less than the unit processing speed, the input buffer could be empty and wait for writing the next data. Therefore, the watermark level can be equal to headroom, so as to ensure that the input does not overflow.

47.3.3. Input buffers

X0 buffer and X1 buffer store the input data of MAC, every multiplication operation multiplies two data together, one data from X0 buffer and the other from X1 buffer. The read address offset is generated by the pointer of the control unit, which is relative to the buffer base address.

Figure 47-2 Input buffer area

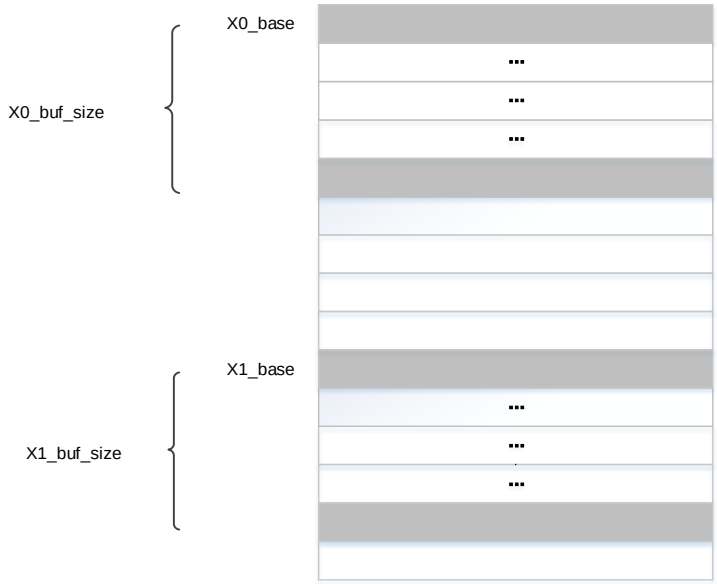

If the X0 buffer works in circular mode, new data will continue to be transferred to the input buffer in case that space is available. For digital filters, preloading the buffer is optional. When the operation is started, if no input samples are written to X0 buffer, the buffer is flagged as empty. DMA or CPU are required to load new samples, the request will not disappear until there are enough samples to begin operation.

Figure 47-3 Circular input buffer area

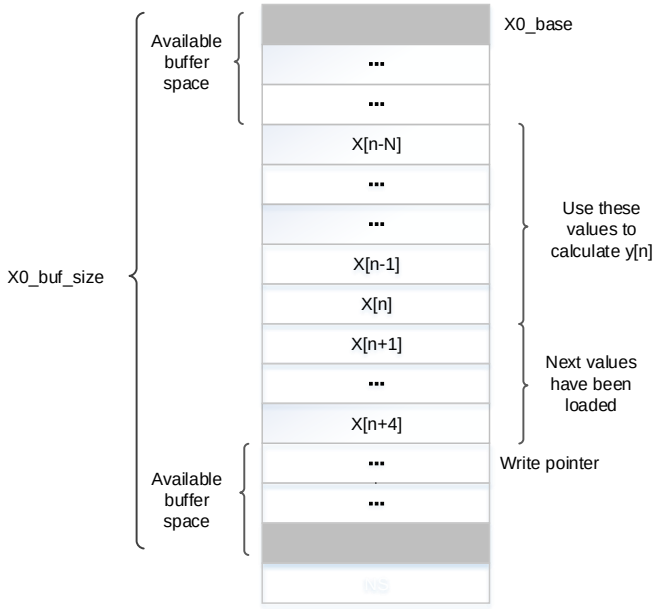

The X1 buffer can only work as a not circular buffer. Unless the contents of the buffer do not follow operation change, X1 buffer usually needs to be pre-loaded. In addition, X1 buffer could store the filter coefficients for filter functions.

For a circular buffer, the allocated space of the buffer (x0_buf_size) should be greater than element numbers in use, therefore, new values are always available in the buffer. ***Figure 47-3 Circular input buffer*** show the buffer layout for a filter operation. For calculating an output sample y[n], a set of input samples is called, from x[n-N] to x[n], length is N+1. Once calculating is finished, call input samples x[n-N+1] to x[n+1], and then start calculating y[n+1]. The least-recent input sample (x[n-N]) is discarded, and a new sample(x[n+1]) is added.

It is necessary to ensure that the new sample x[n+1] in the buffer space is available if required. If x[n+1] is not available, the execution will be suspended and the buffer is flagged as empty, unless a new sample is added. If a timer or other peripheral control the flow of samples, considering that the source provide it is slower than the filter sample processing, the buffer work in empty states usually.

The watermark threshold is configured in the X0_WBFF bit field of the FAC_X0BCFG register, If the amount of free space in X0 buffer is less than the watermark threshold, the X0 buffer is regarded as full state. Interrupts are generated if the full flag is not set, more data are requested for the buffer while FAC in enable,. Under one interrupt, the watermark permit that transferring several data without considering overflow risk. However, the OFEF error flag is set if overflow occur, on the same time, the write data is ignored and the write pointer is not incremented.

Figure 47-4 Circular input buffer operation shows the change process of X0 buffer during an 6-tap FIR filtering processing, while the watermark is set to 3.

Figure 47-4 Circular input buffer operation

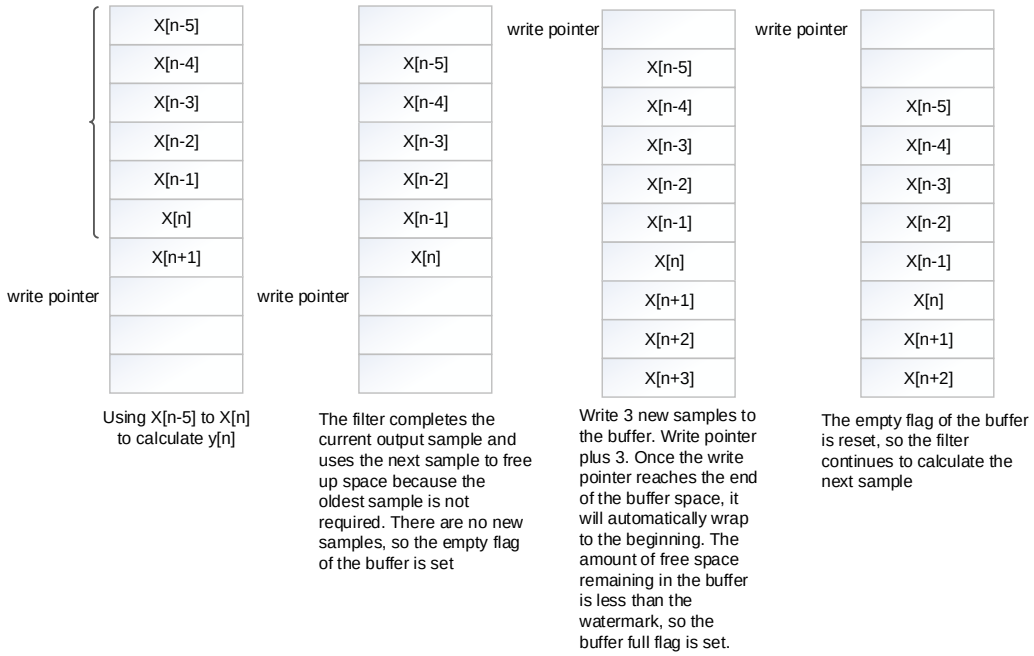

47.3.4. Output buffer

The output of an accumulation is held in Y buffer, the buffer space will be released when the output value is read by processor or DMA.

The read pointer points to the address where the data needs to be read during the read operation, the read data is taken out from the read pointer address when a read command occurs, meanwhile the read pointer is incremented. While pointer reaches the end of the Y buffer space, it returns back to base address.

Figure 47-5 Circular output buffer

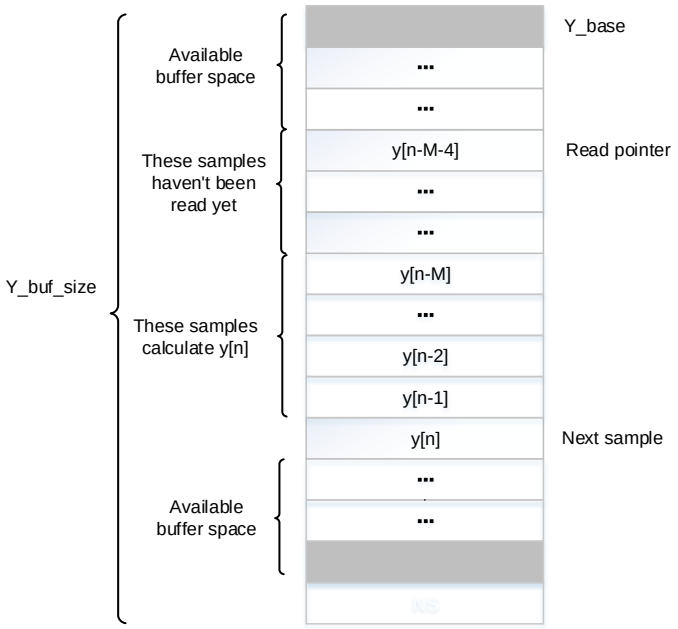

The Y buffer could work in circular buffer mode. The buffer full flag is set if the address for next output data is equal to the address which is indicated by the read pointer, and operation is stalled until the output data is read.

For IIR filters, the next output sample y[n] is calculated by M previous output samples y[n-M] to y[n-1], the least recent sample y[n-M] is discarded when a new sample is added.

If the watermark threshold, which is programmed in the Y_WBFF field of the FAC_YBCFG register, is no less than the number of unread data, the Y buffer is regarded as empty. In case that the empty flag is not set, if interrupt or DMA is enabled, the requests are generated to read data from the Y buffer. Without risk of underflow, several data could be transferred under one interrupt for watermark. However, in case of underflow occurring, UFEF flag is set and the read pointer stops incrementing, while the content of memory, which is addressed at the read pointer, is returned for read operation.

Figure 47-6 Circular output buffer area shows the change process of Y buffer during an 5-tap IIR filtering processing, while the watermark is set to 3.

Figure 47-6 Circular output buffer area

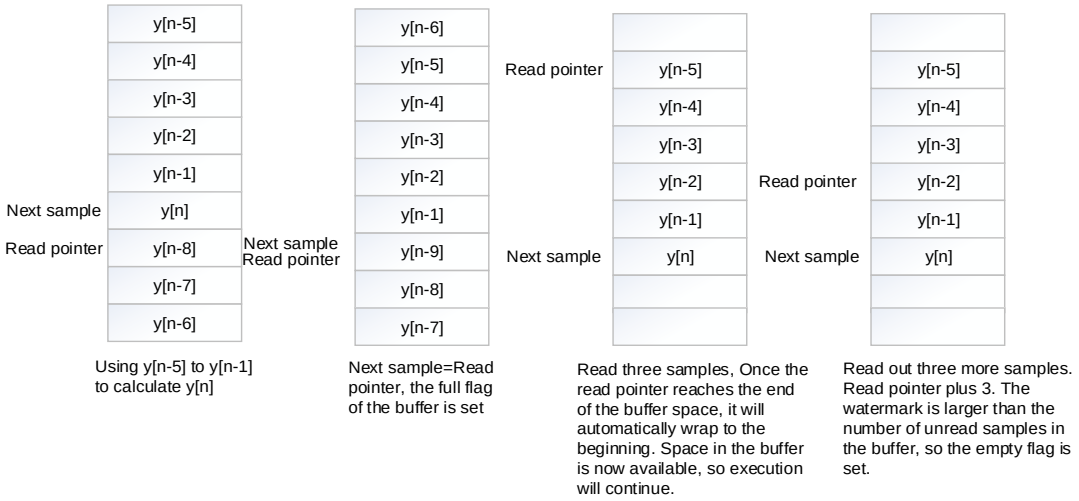

47.3.5. Initialization functions

The FAC unit is initialized by writing the proper value in the FUN bit field of the FAC_PARACFG register when the EXE bit is setting. The IPP and IPQ bitfields contain values that need to be preloaded, while IPR bit field is not used. The EXE bit is reset by hardware automatically, as the Initialization function completed.

DMA requests and interrupts should be disabled during initialization, since flow control is not required, data can be transferred to FAC memory through DMA transfer or software.

X0 buffer loading function

This loading function pre-loads values from the address X0_BASE, and the write data is loaded into the X0 buffer from FAC_WDATA register, at the same time, the write address is increasing. When N values have been loaded into the X0 buffer, the write pointer finally points

to the address X0_BASE + N. The parameter IPP contains N, the number of values, which is loaded into the X0 buffer, while IPQ and IPR are not used. This function is completed when the N write operations to the FAC_WDATA register are completed.

X1 buffer loading function：

This loading function pre-loads values from the address X1_BASE, and the write data is loaded into the X1 buffer from FAC_WDATA register, at the same time, the write address is increasing. In IIR filter, N feed-forward and M feed-back coefficients are loaded into X1 buffer, The coefficients sum is N+M. In FIR filter, since feedback coefficients are absent, M is equal to 0, N feed-forward coefficients are loaded into X1 buffer.

The parameter IPP contains N feed-forward coefficients and the parameter IPQ contains M feed-back coefficients, Both IPP and IPQ are loaded into X1 buffer, where the starting address of IPP is X1_BASE and the starting address of IPQ is X1_BASE+N. IPR is not used in loading X1 buffer. This function is completed when the N + M write operations to the FAC_WDATA register are completed.

Y buffer loading function：

This loading function pre-loads values from the address Y_BASE, and the write data is loaded into the Y buffer from FAC_WDATA register, at the same time, the write address is increasing the write pointer finally points to the address Y_BASE + N. By this function, the feedback storage element of the IIR filter can be preloaded. The parameter IPP contains N, the number of values, which is loaded into the Y buffer, while IPQ and IPR are not used. This function is completed when the N write operations to the FAC_WDATA register are completed.

47.3.6. Filter functions

Writing the appropriate value in the FUN bit field of the FAC_PARACFG register can trigger FIR or IIR filter functions when EXE bit is setting. The IPP, IPQ, and IPR fields contain the suitable parameter values for each filter function, The filter function runs all the time except that the software resets the EXE bit.

FIR filter: $\underline{Y} = \underline{B} * \underline{X}$

$$y_n = 2^{IPR} \sum_{k=0}^{N} (b_k \times x_{n-k}) \quad (47\text{-}1)$$

vector $\underline{B}$ contains N + 1 filter coefficients, vector $\underline{X}$ contains indefinite length input samples, The elements of $\underline{Y}$ is calculated as the dot product, $y_n = \underline{B}.\underline{X}_n$, and $\underline{X}_n = [x_{n-N},\ldots,x_n]$. This function conforms to a finite impulse response (FIR) filter.

FIR filter structure is shown as ***Figure 47-7 The structure of FIR*** .

Figure 47-7 The structure of FIR filter function

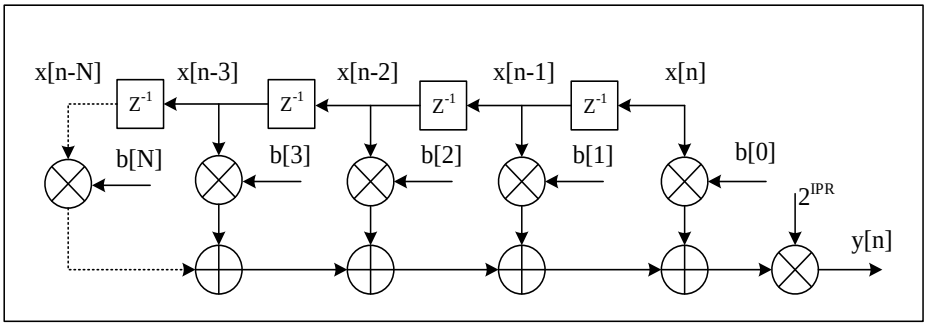

X0 buffer is a circular buffer and composed of the elements of vector X, the length of buffer is N + 1 + d(d is the length of headroom). X1 buffer is composed of the elements of vector B, the length of buffer is N + 1. Y buffer is a circular buffer and composed of the output values(y_n), the length of buffer is d. The length of the parameter IPP is N+1, The vector B is in the range[2:127]. The parameter IPR is the gain, applied to the accumulator output by multiplied 2^{IPR}, where IPR is in the range [0:7]. Parameter IPQ is not used.

IIR filter: Y = B*X+A*Y

$$y_n=2^{IPR}\left(\sum_{k=0}^{N}(x_{n-k}\times b_k)+\sum_{k=1}^{M}\left(y_{n-k}\times a_k\right)\right) \quad (47\text{-}2)$$

The infinite impulse response (IIR) filter output vector Y which is the convolution of a coefficient vector B (length is N+1) and a vector X (length is indefinite), add the convolution of vector Y with vector A (length is M). The elements of Y are calculated by B.X_n + A.Y_{n-1}, where $X_n = [x_{n-N},\ldots,x_n]$ is composed of the N+1 elements, while $Y_{n-1}= [y_{n-M},\ldots,y_{n-1}]$ is composed of the M elements.

IIR filter structure is shown as ***Figure 47-8 The structure of IIR*** .

Figure 47-8 The structure of IIR filter

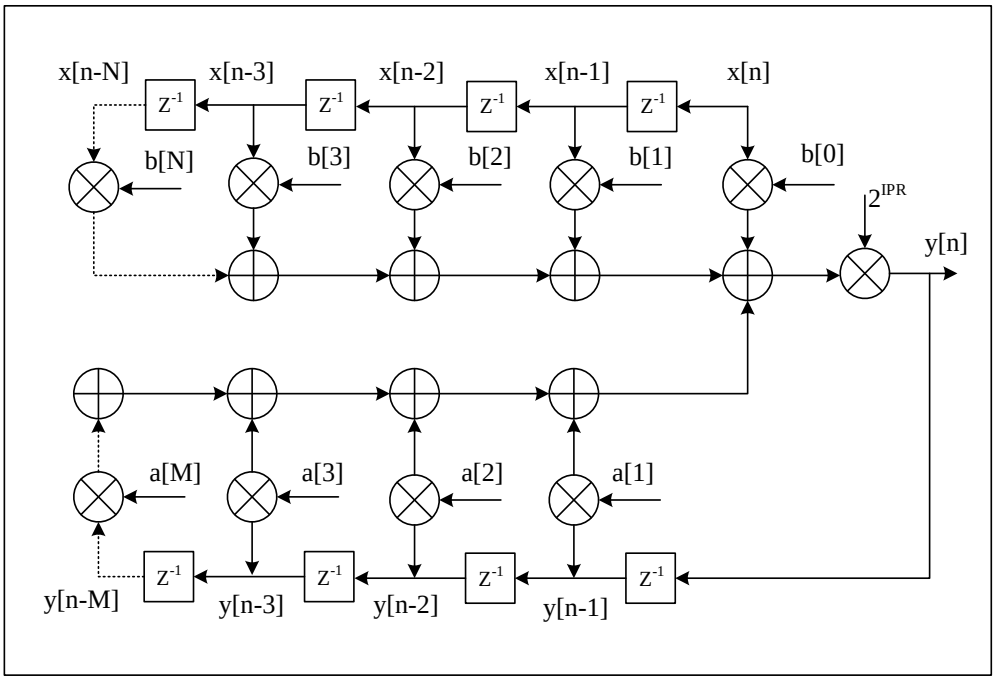

X0 buffer is a circular buffer and composed of the elements of vector X, the length of buffer is N + 1 + d. X1 buffer is composed of the elements of vector B and A, the length of buffer is M + N + 1. Y buffer is a circular buffer and composed of the output values(y_n), the length of buffer is M + d. The length of parameter IPP is N+1, the coefficient vector B is in the range [2:64]. The parameter IPR is the gain, applied to the accumulator output by multiplied 2^{IPR}, where IPR is in the range [0:7]. The length of parameter IPQ is M, the coefficient vector A is in the range [1:63].

47.3.7. Fixed point data format

The FAC operates input and output values in fixed signed integer format (q1.15), 1 is integer sign and 15 is fractional. The numeric range is from -1 (0x8000) to 1 - 2^{-15} (0x7FFF).

The accumulator value format is q4.22, the format value contains 26 bits, 4 are integer sign and 22 are fractional, support accumulation sums in the range from -8 (0x2000000) to +7.99999976(0x1FFFFFF). In steps of 6dB, a programmable gain can be used to the accumulator output, from 0dB to 42dB.

If the numeric range is exceeded, the accumulator content is not saturated. If value is more than +7.99999976 or less than -8, triggered wrap is harmless, since subsequent accumulations undo the wrapping. However, if wrapping occurs, STEF flag in the FAC_STAT register is set, and then, if STEIE bit in the FAC_CTL register is set, corresponding interrupt is generated.

When the CPEN bit of FAC_CTL register is set, the data output of accumulator could be saturated optionally after the programmable gain application. Any value is forced output as 1 - 2^{-15} or -1 while the value exceeds the q1.15 numeric range. While using the gain, If CPEN

bit is not set, the unused accumulator bits are truncated simply.

47.3.8. Float point data format

The operation data and calculation result data format is given in ***Table 47-1 IEEE 32-Bit Single Precision Floating-Point Format***. they must meet IEEE 32 bit Single Precision Floating-Point.

Table 47-1 IEEE 32-Bit Single Precision Floating-Point Format

S [31]	E [30:23]	M [22:0]	Value (V)
0	0	0	Zero (V = 0)
1	0	0	Negative Zero (V = -0)
0 + ve 1 - ve	0	non zero	De-normalized (V=$(-1)^{s}*2^{(-126)}*$ (0.M))
0 + ve 1 - ve	1 to 254	0 to 0x7FFFFF	Normal Range(V=$(-1)^{s}*2^{(E-127)}*$ (1.M))
0	254	0x7FFFFF	Positive Max (V = +Max)
1	254	0x7FFFFF	Negative Max (V = -Max)
0	max=255	0	Positive Infinity (V = +Infinity)
1	max=255	0	Negative Infinity (V = -Infinity)
x	max=255	non zero	Not A Number (V = NaN)

The treatment of the various IEEE floating-point numerical formats for this FAC is given as below:

De-Normalized Numbers: A de-normalized operand (E=0, M!=0) input is treated as zero (E=0, M=0).

Overflow: Overflow occurs when an operation generates a value that is too large to represent in the given floating-point format. Under such cases, a positive or negative Infinity value is returned, and STEF flag in the FAC_STAT register is set.

Not a Number (NaN): An NaN operand (E=max, M!=0) input is treated as infinity (E=max, M=0).

Note: configure FLTEN bit in FAC_CTL register as set, input and output data in 32 bit IEEE data format, not support clip and gain of output.

47.3.9. FIR filters

The FAC supports FIR filters, and the number of taps or coefficients is N. FIR filters require a minimum length of local memory of 2N + 1: N input samples ,1 output sample and N coefficients,. the maximum size for N is 127 while the local memory size is 256,. A small amount of additional space is allocated for maximum throughput, d0 is for input sample buffer and d1 is for output sample buffer, so as to guarantee the filter does not stop to wait for a new input sample or reading the output sample. 2N + d0 + d1 is the required local memory.

X0_BUF_SIZE is equal to N + d0, X1_BUF_SIZE is equal to N and Y_BUF_SIZE is equal to d1 (Y_BUF_SIZE could be equal to 1 if no extra space is needed).

Even though the user can arbitrarily allocate the buffer base address, it is necessary to avoid that the X1 buffer overlap with the other buffer, otherwise, the coefficients are overwritten. For example, X1_BASE is equal to 0, X0_BASE is equal to N, and Y_BASE is equal to 2N+d0. However, the X0 and Y buffers may overlap if the memory space is limited, such as X1_BASE is equal to 0, X0_BASE is equal to N, and Y_BASE is equal to N. The output sample would replace the oldest input sample. Since Y_BUF_SIZE = X0_BUF_SIZE = N + d0, the buffers hold in sync still.

Note: The X0_WBFF field of X0BCFG register must be programmed not more than $\log_2(d0)$, or else, before writing N input samples, the buffer is flagged as full, then the samples are no longer needed. In the same way, the Y_WBEF field of YBCFG register must be programmed not more than $\log_2(d1)$.

The X1 buffer must preload the filter coefficients. Any number of samples, which is up to N, could be preloaded into the X0 buffer. Since feedback path is not needed for the FIR filter, pre-loading the Y buffer is unnecessary.

The FAC_CTL register should be programmed depend on polling, interrupt and DMA, which is used for writing data to FAC memory and reading data from FAC memory. In polling method, software should confirm that the X0BFF bit is reset or YBEF bit is reset before writing to WDATA or reading from RDATA. In interrupt method, the interrupt request is launched when the X0BFF bit is reset for writing, or the YBEF bit is reset for reading. In DMA method, DMA requests are launched on the DMA write channel or read channel, while the X0BFF bit is reset or the YBEF bit is reset.

Writing the following values in the FAC_PARACFG register, thus the filter is started.

FUN= 8 (FIR filter); IPP = N (number of coefficients); IPQ = “any value”; IPR= Gain; EXE = 1.

If the number of values preloaded in the X0 buffer is less than N + d – 2^{X0_WBFF}, the X0BFF flag is in low state. If the WIE bit is set, writing 2^{X0_WBFF} samples into X0 buffer through the FAC_WDATA register is triggered by the write interrupt request. When 2^{X0_WBFF} values have been written to FAC_WDATA register, The interrupt handler check the X0BFF flag unless the X0BFF bit in FAC_STAT register is set. In the same way, if DWEN bit is set in the FAC_CTL register, constantly generate DMA write channel request, unless the X0BFF bit in FAC_STAT register is set.

When samples (at least N) have been written into the X0 buffer, First output sample is calculated by the filter. When writing 2^{Y_WBEF} output samples into the Y buffer, the YBEF bit in the FAC_STAT register is reset, the interrupt is request to read 2^{Y_WBEF} samples from the buffer, if the RIE bit is set in the FAC_CTL register. The interrupt handler should repeatedly check the YBEF flag after every 2^{Y_WBEF} values have been read from FAC_RDATA register unless the YBEF bit in FAC_STAT register is set. In the same way, if DREN bit is set in the FAC_CTL register, constantly generate DMA read channel request, unless the YBEF bit in FAC_STAT register is set. Resetting the EXE bit could halt the filter operation, or else, the

filter will continue to operate.

47.3.10. IIR filters

The FAC supports IIR filters with length N (the number of coefficients or feed-forward taps) and M (the number of feedback coefficients, which can be configured from 1 to N-1).

The minimum memory required for an IIR filter is 2N + 2M, which include N feed-forward coefficients and M feed-back coefficients, N input samples and M output samples. In case that M is equal to N-1, the maximum filter length N = 64 can be implemented.

For maximum throughput, there is an additional space d0 for input buffer size, and d1 for output buffer size, should be allowed to configured, so the total memory requirement 2M + 2N + d0 + d1. X0_BUF_SIZE = N + d0, X1_BUF_SIZE = N + M and Y_BUF_SIZE = M + d1. The buffer base address must not overlap, even if it is allocated anywhere, such as: X1_BASE = 0, X0_BASE = N+M and Y_BASE = 2N+M+d0.

Note: The WBFF field of X0BCFG register must be programmed not more than $\log_2$(d0), or else, before writing N input samples, the full flag of the buffer is set, and then no more sample points are needed. In the same way, the WBEF field of YBCFG register must be programmed not more than $\log_2$(d1).

By using the Load X1 buffer function, the X1 buffer must preload the filter coefficients (N feed-forward and M feedback). Any number of samples, which is up to a maximum of N, could be preloaded into the X0 buffer. In the same way, any number of samples, which is up to a maximum of M, could be preloaded into the Y buffer.

Writing the following values in the FAC_PARACFG register, thus the filter is started.

FUN= 9 (IIR filter); IPP = N (number of feed-forward coefficients);

IPQ = M (number of feed-back coefficients); IPR= Gain; EXE = 1.

If the number of values, which have been preloaded in the X0 buffer, is less than N + d – 2^{X0_WBFF}, the X0BFF flag is held in low state. If the WIE bit is set in the FAC_CTL register, When 2^{X0_WBFF} values have been written to FAC_WDATA register, The interrupt handler check the X0BFF flag unless the X0BFF bit in FAC_STAT register is set. In the same way, if DWEN bit is set in the FAC_CTL register, constantly generate DMA write channel request, unless the X0BFF bit in FAC_STAT register is set.

When samples (at least N) have been written in the X0 buffer, first output sample is calculated by the filter, which is calculated by using the X0 buffer first N samples and the Y buffer first M samples. The address at where first output sample write into Y buffer is Y_BASE+M.

When writing 2^{Y_WBEF} output samples in the Y buffer, the YBEF bit in the FAC_STAT register is reset. the interrupt request to read 2^{Y_WBEF} samples from the buffer, if the RIE bit is set in the FAC_CTL register. The interrupt handler should repeatedly check the YBEF flag after every 2^{Y_WBEF} values have been read from FAC_RDATA register unless the YBEF bit in FAC_STAT register is set. In the same way, if DREN bit is set in the FAC_CTL register,

constantly generate DMA read channel request, unless the YBEF bit in FAC_STAT register is set. Resetting the EXE bit could halt the filter operation, or else, the filter will continue to operate.

47.4. Register definition

FAC base address: 0x4802 4800

47.4.1. FAC X0 buffer configure register (FAC_X0BCFG)

Address offset: 0x00

Reset value: 0x0000 0000

This register has to be accessed by word (32-bit) and can only be modified if EXE = 0 in the FAC_PARACFG register.

31	30	29	28	27	26	25	24	23	22	21	20	19	18	17	16
Reserved						X0_WBFF[1:0]		Reserved							
						rw									

15	14	13	12	11	10	9	8	7	6	5	4	3	2	1	0
X0B_SIZE[7:0]								X0B_ADDR[7:0]							
rw								rw							

Bits	Fields	Descriptions
31:26	Reserved	Must be kept at reset value.
25:24	X0_WBFF[1:0]	Buffer full flag of watermark. If free spaces number in the buffer is less than 2^{X0_WBFF}, the flag is set. 00: Threshold = 1(if DMA write requests are enabled) 01: Threshold = 2 10: Threshold = 4 11: Threshold = 8 Under one interrupt, if several data would be transferred into the buffer, the threshold should be set more than 1.
23:16	Reserved	Must be kept at reset value.
15:8	X0B_SIZE[7:0]	X0 buffer size, the number of feed-forward taps.
7:0	X0B_ADDR[7:0]	X0 buffer base address

47.4.2. FAC X1 buffer configure register (FAC_X1BCFG)

Address offset: 0x04

Reset value: 0x0000 0000

This register has to be accessed by word (32-bit)

31	30	29	28	27	26	25	24	23	22	21	20	19	18	17	16
Reserved															

15	14	13	12	11	10	9	8	7	6	5	4	3	2	1	0

X1B_SIZE[7:0]	X1B_ADDR[7:0]
rw	rw

Bits	Fields	Descriptions
31:16	Reserved	Must be kept at reset value.
15:8	X1B_SIZE[7:0]	X1 buffer size When FAC is running (EXE = 1), this bit field can not be changed.
7:0	X1B_ADDR[7:0]	X1 buffer base address When FAC is running (EXE = 1), this bit field can be changed. For example, When changing the coefficient value, the filter should be paused, because changing the factor during the calculation will affect the results.

47.4.3. FAC Y buffer configure register (FAC_YBCFG)

Address offset: 0x08

Reset value: 0x0000 0000

This register has to be accessed by word (32-bit) and can only be modified if EXE = 0 in the FAC_PARACFG register.

31	30	29	28	27	26	25	24	23	22	21	20	19	18	17	16
Reserved						Y_WBEF[1:0]		Reserved							
						rw									

15	14	13	12	11	10	9	8	7	6	5	4	3	2	1	0
YB_SIZE[7:0]								YB_ADDR[7:0]							
rw								rw							

Bits	Fields	Descriptions
31:26	Reserved	Must be kept at reset value.
25:24	Y_WBEF[1:0]	Buffer empty flag of watermark If the number of unread data in the buffer is less than 2^{Y_WBEF}, the flag is set. 00: Threshold = 1 01: Threshold = 2 10: Threshold = 4 11: Threshold = 8 Under one interrupt, if several data would be transferred from the buffer, setting the threshold more than 1. If DMA read command is enabled, threshold should be set to 1.
23:16	Reserved	Must be kept at reset value.
15:8	YB_SIZE[7:0]	Y buffer size The minimum buffer size is the watermark threshold + 1 for FIR filters. the minimum buffer size is the watermark threshold + the number of feedback taps

		for IIR filters.
7:0	YB_ADDR[7:0]	Y buffer base address

47.4.4. FAC Parameter configure register (FAC_PARACFG)

Address offset: 0x0C

Reset value: 0x0000 0000

This register has to be accessed by word (32-bit)

31	30	29	28	27	26	25	24	23	22	21	20	19	18	17	16
EXE	FUN[6:0]							IPR[7:0]							
rw				rw							rw				

15	14	13	12	11	10	9	8	7	6	5	4	3	2	1	0
IPQ[7:0]								IPP[7:0]							
rw								rw							

Bits	Fields	Descriptions
31	EXE	Execution 0: Stop execution 1: Start execution This bit is set in order to execute the function of the FUN bit field, FAC will stop any ongoing functions through software reset. This bit is reset by hardware for initialization functions.
30:24	FUN[6:0]	Function 0000001: Load X0 buffer 0000010: Load X1 buffer 0000011: Load Y buffer 0001000: FIR filter 0001001: IIR filter others: Reserved This register can only be modified when EXE = 0 in the FAC_PARACFG register.
23:16	IPR[7:0]	Input parameter IPR This register can only be modified when EXE = 0 in the FAC_PARACFG register.
15:8	IPQ[7:0]	Input parameter IPQ This register can only be modified when EXE = 0 in the FAC_PARACFG register.
7:0	IPP[7:0]	Input parameter IPP This register can only be modified when EXE = 0 in the FAC_PARACFG register.

47.4.5. FAC Control register (FAC_CTL)

Address offset: 0x10

Reset value: 0x0000 0000

This register has to be accessed by word (32-bit)

31	30	29	28	27	26	25	24	23	22	21	20	19	18	17	16
Reserved															RST
															rw

15	14	13	12	11	10	9	8	7	6	5	4	3	2	1	0
CPEN	FLTEN	Reserved				DWEN	DREN	Reserved		GSTEIE	STEIE	UFEIE	OFEIE	WIE	RIE
rw	rw					rw	rw			rw	rw	rw	rw	rw	rw

Bits	Fields	Descriptions
31:17	Reserved	Must be kept at reset value.
16	RST	Reset FAC unit 0: Reset disable 1: Reset enable The write pointer and read pointer, EXE bit, FAC_STAT register and FAC_PARACFG register will be reset when RST is 1.
15	CPEN	Clipping enable 0: Clipping disable, the value of accumulator output out of range is truncated 1: Clipping enable, the value of accumulator output out of range is saturated to the maximum positive value or maximum negative value.
14	FLTEN	Floating point format enable 0: Input data and result support fixed point data format q1.15 1: Input data and result support floating point data format This bit can only be modified if EXE = 0 in the FAC_PARACFG register.
13:10	Reserved	Must be kept at reset value.
9	DWEN	DMA write channel enable 0: DMA request is not generated 1: DMA request is generated while the X0 buffer is not full. This bit can only be modified if EXE = 0 in the FAC_PARACFG register.
8	DREN	DMA read channel enable 0: DMA request is not generated 1: DMA request is generated while the Y buffer is not empty. This bit can only be modified if EXE = 0 in the FAC_PARACFG register.
7:6	Reserved	Must be kept at reset value.
5	GSTEIE	Gain saturation error interrupt enable 0: No interrupts are generated. 1: An interrupt request is generated while the GSTEF flag is set Software set and clear this bit.
4	STEIE	Saturation error interrupt enable

		0: No interrupts are generated. 1: An interrupt request is generated while the STEF flag is set Software set and clear this bit.
3	UFEIE	Underflow error interrupt enable 0: No interrupts are generated. 1: An interrupt request is generated while the UFEF flag is set Software set and clear this bit.
2	OFEIE	Overflow error interrupt enable 0: No interrupts are generated. 1: An interrupt request is generated while the OFEF flag is set Software set and clear this bit.
1	WIE	Write interrupt enable 0: No interrupts are generated. 1: An interrupt request is generated if the X0BFF flag is set Software set and clear this bit.
0	RIE	Read interrupt enable 0: No interrupts are generated. 1: An interrupt request is generated if the YBEF flag is set Software set and clear this bit.

47.4.6. FAC Status register (FAC_STAT)

Address offset: 0x14

Reset value: 0x0000 0001

This register has to be accessed by word (32-bit)

31	30	29	28	27	26	25	24	23	22	21	20	19	18	17	16
Reserved															

15	14	13	12	11	10	9	8	7	6	5	4	3	2	1	0
Reserved				GSTEF	STEF	UFEF	OFEF	Reserved						X0BFF	YBEF
					r	r	r							r	r

Bits	Fields	Descriptions
31:12	Reserved	Must be kept at reset value.
11	GSTEF	Gain saturation error flag, it is set when gain exceed range 0: No gain saturation error detected 1: Gain saturation error detected.
10	STEF	Saturation error flag 0: No saturation error detected 1: Saturation error detected.

		Saturation occurs when the cumulative result exceeds the range of the value
9	UFEF	Underflow error flag 0: No underflow error detected 1: Underflow error detected. When there is no valid data available in the Y buffer, underflow occurs when reading from FAC_RDATA
8	OFEF	Overflow error flag 0: No overflow error detected 1: Overflow error detected When there is no free space in X1 buffer, overflow occurs when writing to FAC_WDATA.
7:2	Reserved	Must be kept at reset value.
1	X0BFF	X0 buffer full flag 0: X0 buffer is not full. 1: X0 buffer is full. Hardware or a reset will set and clear this bit.
0	YBEF	Y buffer empty flag 0: Y buffer is not full. 1: Y buffer is full. Hardware or a reset will set and clear this bit.

47.4.7. FAC write data register (FAC_WDATA)

Address offset: 0x18

Reset value: 0x0000 0000

This register has to be accessed by word (32-bit)

31	30	29	28	27	26	25	24	23	22	21	20	19	18	17	16
WDATA[31:16]															
rw															

15	14	13	12	11	10	9	8	7	6	5	4	3	2	1	0
WDATA[15:0]															
rw															

When FLTEN = 1, float point data format is selected;

Bits	Fields	Descriptions
31:0	WDATA[31:0]	Write data When a write command is performed on the register, the write data is transferred to the address offset which is pointed to by the write pointer. After each write of data is completed, The pointer address is incremented.

When FLTEN = 0, fix point data format is selected;

Bits	Fields	Descriptions

31:16	Reserved	Must be kept at reset value.
15:0	WDATA[15:0]	Write data When a write command is performed on the register, the write data is transferred to the address offset which is pointed to by the write pointer. After each write of data is completed, The pointer address is incremented.

47.4.8. FAC read data register (FAC_RDATA)

Address offset: 0x1C

Reset value: 0x0000 0000

This register has to be accessed by word (32-bit)

31	30	29	28	27	26	25	24	23	22	21	20	19	18	17	16
RDATA[31:16]															
r															

15	14	13	12	11	10	9	8	7	6	5	4	3	2	1	0
RDATA[15:0]															
r															

When FLTEN = 1, float point data format is selected;

Bits	Fields	Descriptions
31:0	RDATA[31:0]	Read data When a read command is performed on the register, the contents in the Y buffer which is pointed to by the read pointer are the read data. When each read data is completed, The pointer address is incremented.

When FLTEN = 0, fix point data format is selected;

Bits	Fields	Descriptions
31:16	Reserved	Must be kept at reset value.
15:0	RDATA[15:0]	Read data When a read command is performed on the register, the contents in the Y buffer which is pointed to by the read pointer are the read data. When each read data is completed, The pointer address is incremented.

48. Hardware semaphore (HWSEM)

48.1. Overview

Hardware semaphore (HWSEM) provides a non-blocking mechanism to ensure the synchronization of processes. HWSEM realizes 32 semaphores in an atomic way, supporting semaphore write lock and read lock, and semaphore can only be unlocked when bus master and process are matched.

48.2. Characteristics

- 32 semaphores.
- An interrupt is generated when a semaphore is unlocked.
- Semaphore is unlocked only when MID[3:0] and PID[7:0] are matched.

48.3. Function overview

48.3.1. Block diagram

Figure 48-1. HWSEM diagram

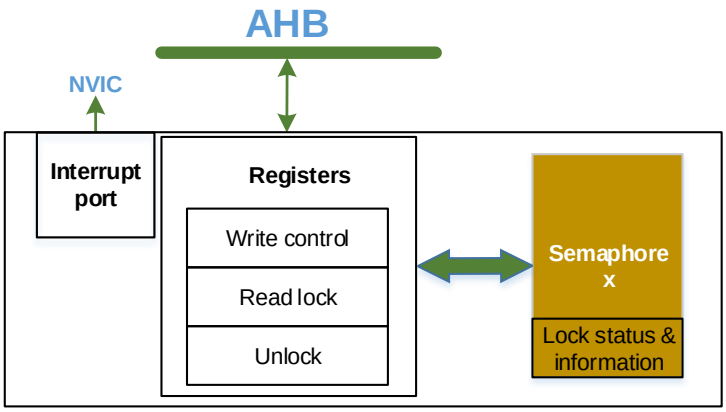

As shown in ***Figure 48-1. HWSEM diagram***, HWSEM includes three sub-blocks:

- Semaphore x sub-block, including semaphore lock status and lock informations.
- Registers, used for accessing the semaphores.
- Interrupt port for interrupt control and status.

48.3.2. Semaphore x

Lock status

LK bit in HWSEM_CTLx (x = 0…31) register shows the lock status of semaphore x.

When LK bit is 0, the semaphore is unlocked.

When LK bit is 1, the semaphore is locked.

Lock information

When the semaphore is unlocked, MID[3:0] and PID[7:0] bit fields in HWSEM_CTLx (x = 0…31) register are 0.

When the semaphore is locked, MID[3:0] bit field in HWSEM_CTLx (x = 0…31) / HWSEM_RLKx (x = 0…31) register shows which AHB bus master locked it, and PID[7:0] bit field in HWSEM_CTLx (x = 0…31) / HWSEM_RLKx (x = 0…31) register shows which process of that AHB bus master locked it.

Figure 48-2. HWSEM state machine

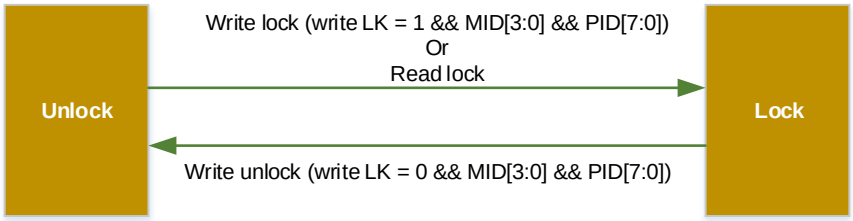

48.3.3. Lock a semaphore

HWSEM supports two ways for semaphore locking:

- Write lock.
- Read lock.

Note: Only MID[3:0] which is equal to 3 can lock and unlock a semaphore.

Write lock

When a semaphore is locked by write lock, MID[3:0] bit field in HWSEM_CTLx (x = 0…31) / HWSEM_RLKx (x = 0…31) register is the AHB bus master which locked it, and PID[7:0] bit field in HWSEM_CTLx (x = 0…31) / HWSEM_RLKx (x = 0…31) register is the configured process identification.

Each process of AHB bus master must owns an unique PID[7:0] value.

Write lock operation follows the following steps:

1. Write LK = 1, and write MID[3:0] and PID[7:0] bit fields in HWSEM_CTLx (x = 0…31) register to lock the semaphore.
2. Read the written HWSEM_CTLx (x = 0…31) register, to confirm the MID[3:0] and PID[7:0] bit fields are the written value or not.
3. If the MID[3:0] and PID[7:0] bit fields in HWSEM_CTLx (x = 0…31) register match with the written value, the semaphore is locked by this process. Otherwise, the semaphore is locked by other AHB bus master or process, go to step 1 to try again.

Read lock

When a semaphore is locked by read lock, MID[3:0] bit field in HWSEM_CTLx (x = 0…31) / HWSEM_RLKx (x = 0…31) register is the AHB bus master which locked it, while PID[7:0] bit field in HWSEM_CTLx (x = 0…31) / HWSEM_RLKx (x = 0…31) register is always 0.

If more than one processes use read lock to lock the same semaphore, when the semaphore is read locked by one process, other processes will find that the semaphore is read as locked by themselves, and cannot recognize which process locks it.

Read lock operation follows the following steps:

1. Read HWSEM_RLKx (x = 0…31) register to lock the semaphore.
2. If the MID[3:0] matches with the AHB bus master, and PID[7:0] is read as 0, the semaphore is read locked. While if the semaphore is locked by other AHB bus master (the MID[3:0] does not match with the AHB bus master) or write locked by other processes (PID[7:0] is not 0), go to step 1 to try again.

48.3.4. Unlock a semaphore

When a semaphore is locked, use write unlock to release a semaphore. The operation is protected from being unlocked by the process which does not have the unlocking priority.

Only the process which has the matching MID[3:0] and PID[7:0] can unlock the semaphore. After a valid write unlock operation, LK bit, MID[3:0] bits and PID[7:0] bits in HWSEM_CTLx (x = 0…31) / HWSEM_RLKx (x = 0…31) register are cleared to 0, an interrupt will be generated if SIEx bit in HWSEM_INTEN register is set to 1.

Write unlock operation follows the following steps:

1. Write LK = 0, and write MID[3:0] and PID[7:0] bit fields in HWSEM_CTLx (x = 0…31) register to unlock the semaphore.
2. Read the written HWSEM_CTLx (x = 0…31) register, to confirm the LK bit is 0.
3. If the MID[3:0] and PID[7:0] bit fields in HWSEM_CTLx (x = 0…31) register match with the semaphore lock information, LK bit is 0 and the semaphore is unlocked. Otherwise, the unlock operation will be ignored and LK bit remains 1.

48.3.5. Unlock all semaphores

When the AHB bus master works incorrectly, all unlock operation can be used to clear lock status and lock information of all semaphores.

All unlock operation follows the following steps:

1. Write KEY[15:0] and MID[3:0] bit field of HWSEM_UNLK register to unlock all semaphores.
2. Read the HWSEM_CTLx (x = 0…31) registers, to confirm all the LK bits are 0.
3. If the MID[3:0] bit field in HWSEM_CTLx (x = 0…31) register matches with the semaphore lock information, LK bit is 0 and the semaphore is unlocked, an interrupt will be generated if SIEx bit in HWSEM_INTEN register is set to 1. Otherwise, the unlock operation will be ignored and LK bit remains 1.

48.3.6. Interrupts

The semaphore should be locked and unlocked in user process, it cannot be locked or unlocked in the interrupt service. It is suggested to try to lock a semaphore twice, and only when failed on the second try, enable the semaphore interrupt and wait the interrupt.

Figure 48-3. First try lock success shows when target process first try to lock a semaphore, and succeed to lock it, then the clear flag status operation should be done, and no need to enable the semaphore interrupt.

Figure 48-4. Second try lock success shows when target process fails on the first try of locking a semaphore, then before the second try, the clear flag status operation should be done, then target process succeed to lock it, in this situation, there is also no need to enable the semaphore interrupt.

Figure 48-5. Second try lock fail shows when target process fails on the first try of locking a semaphore, then before the second try, the clear flag status operation should be done, however, target process failed to lock it, in this situation, enable the semaphore interrupt and wait the interrupt, then perform the next try.

Figure 48-3. First try lock success

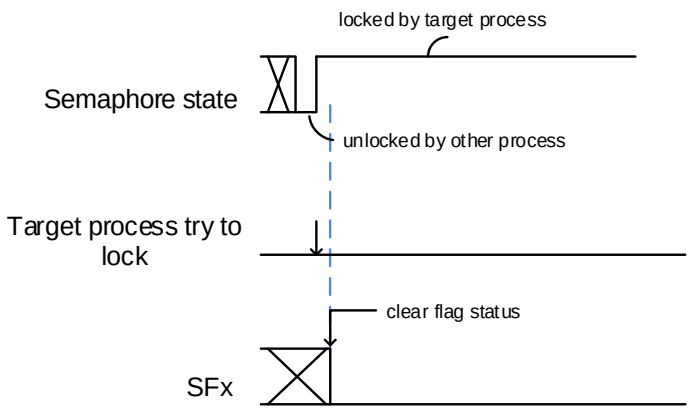

Figure 48-4. Second try lock success

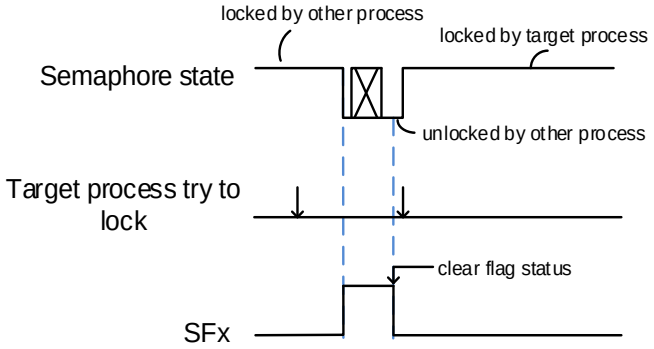

Figure 48-5. Second try lock fail

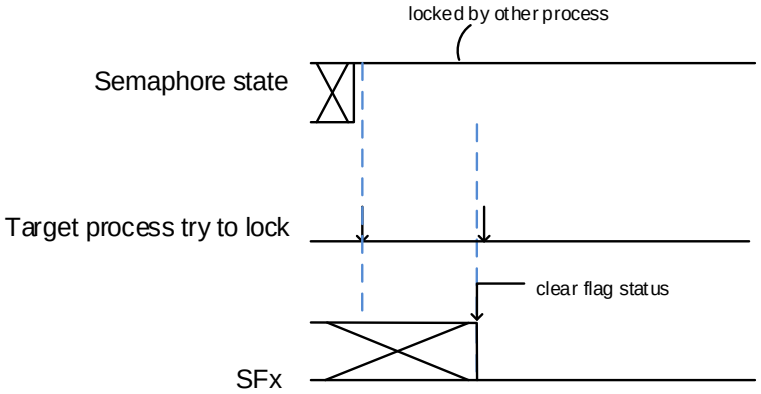

Each semaphore can generate an unlock semaphore interrupt. Each interrupt event has a interrupt flag bit is in HWSEM_INTF register, a clear bit in HWSEM_INTC register, and an enable bit in HWSEM_INTEN register. The relationship is described in the following ***Table 48-1. interrupt events***.

Table 48-1. interrupt events

Interrupt event	Interrupt flag bit	Clear bit	Enable bit
	HWSEM_INTF	HWSEM _INTC	HWSEM _INTEN
Semaphore x unlocked	SIFx	SIFCx	SIEx

The HWSEM interrupt logic is shown in the ***Figure 48-6. HWSEM interrupt logic***, an interrupt can be produced when an interrupt event occurs and enabled the event.

Figure 48-6. HWSEM interrupt logic

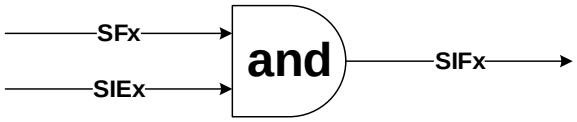

Note: “x” indicates semaphore number (x=0…31).

48.4. Register definition

HWSEM base address: 0x5802 6400

48.4.1. Control register (HWSEM_CTLx)(x = 0…31)

Address offset: 0x00 + 0x4 * x

Reset value: 0x0000 0010

This register has to be accessed by word (32-bit).

31	30	29	28	27	26	25	24	23	22	21	20	19	18	17	16
LK	Reserved														
rw															

15	14	13	12	11	10	9	8	7	6	5	4	3	2	1	0
Reserved				MID[3:0]				PID[7:0]							
				rw				rw							

Bits	Fields	Descriptions
31	LK	Lock semaphore 0: Unlock the semaphore when MID[3:0] and PID[7:0] are matched with the lock information 1: Try to lock the semaphore
30:12	Reserved	Must be kept at reset value.
11:8	MID[3:0]	AHB bus master identification Write by software, only when the semaphore is unlocked, and the writing value of MID[3:0] is matched with the AHB bus master in a write lock operation, the value will be written to this bit field. When the writing value of MID[3:0] is matched with the AHB bus master in a write unlock operation, this bit field will be cleared to 0.
7:0	PID[7:0]	Process identification Write by software, only when the semaphore is unlocked, the writing value of PID[7:0] will be written to this bit field in a write lock operation. In a write unlock operation, this bit field will be cleared to 0.

48.4.2. Read lock register (HWSEM_RLKx)(x = 0...31)

Address offset: 0x80 + 0x4 * x

Reset value: 0x0000 0000

HWSEM_RLKx (x = 0…31) register access the same physical addresses as the HWSEM_CTLx (x = 0…31) register.

This register has to be accessed by word (32-bit).

31	30	29	28	27	26	25	24	23	22	21	20	19	18	17	16
LK	Reserved														
r															

15	14	13	12	11	10	9	8	7	6	5	4	3	2	1	0
Reserved				MID[3:0]				PID[7:0]							
				r				r							

Bits	Fields	Descriptions
31	LK	Lock semaphore by reading When read this bit by a matched AHB bus master, it always returns 1, if the semaphore is unlocked before read, the semaphore will be read locked by hardware, while if the semaphore is already locked before read, this bit will not change. 0: Semaphore is unlocked. 1: Semaphore is locked.
30:12	Reserved	Must be kept at reset value.
11:8	MID[3:0]	Bus master identification When read this bit field by a matched AHB bus master, if the semaphore is unlocked before read, this bit field will be written with the AHB bus master identification, if the semaphore is locked before read, the MID[3:0] of which locks the semaphore will be returned.
7:0	PID[7:0]	Process identification When read this bit field by a matched AHB bus master, if the semaphore is unlocked before read, this bit field will be written with 0 and also be read as 0, if the semaphore is locked before read, the PID[7:0] of which locks the semaphore will be returned.

48.4.3. Interrupt enable register (HWSEM_INTEN)

Address offset: 0x100

Reset value: 0x0000 0000

This register has to be accessed by word (32-bit).

31	30	29	28	27	26	25	24	23	22	21	20	19	18	17	16
SIE31	SIE30	SIE29	SIE28	SIE27	SIE26	SIE25	SIE24	SIE23	SIE22	SIE21	SIE20	SIE19	SIE18	SIE17	SIE16
rw	rw	rw	rw	rw	rw	rw	rw	rw	rw	rw	rw	rw	rw	rw	rw

15	14	13	12	11	10	9	8	7	6	5	4	3	2	1	0
SIE15	SIE14	SIE13	SIE12	SIE11	SIE10	SIE9	SIE8	SIE7	SIE6	SIE5	SIE4	SIE3	SIE2	SIE1	SIE0
rw	rw	rw	rw	rw	rw	rw	rw	rw	rw	rw	rw	rw	rw	rw	rw

Bits	Fields	Descriptions
31:0	SIEx	Semaphore interrupt enable bit 0: Disable semaphore interrupt

1: Enable semaphore interrupt

48.4.4. Interrupt flag clear register (HWSEM_INTC)

Address offset: 0x104

Reset value: 0x0000 0000

This register has to be accessed by word (32-bit).

31	30	29	28	27	26	25	24	23	22	21	20	19	18	17	16
SIFC31	SIFC30	SIFC29	SIFC28	SIFC27	SIFC26	SIFC25	SIFC24	SIFC23	SIFC22	SIFC21	SIFC20	SIFC19	SIFC18	SIFC17	SIFC16
w1	w1	w1	w1	w1	w1	w1	w1	w1	w1	w1	w1	w1	w1	w1	w1
15	14	13	12	11	10	9	8	7	6	5	4	3	2	1	0
SIFC15	SIFC14	SIFC13	SIFC12	SIFC11	SIFC10	SIFC9	SIFC8	SIFC7	SIFC6	SIFC5	SIFC4	SIFC3	SIFC2	SIFC1	SIFC0
w1	w1	w1	w1	w1	w1	w1	w1	w1	w1	w1	w1	w1	w1	w1	w1

Bits	Fields	Descriptions
31:0	SIFCx	Semaphore interrupt flag clear bit Written by software, and be read as 0. 0: No effect 1: Clear the semaphore flag and interrupt flag

48.4.5. Status register (HWSEM_STAT)

Address offset: 0x108

Reset value: 0x0000 0000

This register has to be accessed by word (32-bit).

31	30	29	28	27	26	25	24	23	22	21	20	19	18	17	16
SF31	SF30	SF29	SF28	SF27	SF26	SF25	SF24	SF23	SF22	SF21	SF20	SF19	SF18	SF17	SF16
r	r	r	r	r	r	r	r	r	r	r	r	r	r	r	r
15	14	13	12	11	10	9	8	7	6	5	4	3	2	1	0
SF15	SF14	SF13	SF12	SF11	SF10	SF9	SF8	SF7	SF6	SF5	SF4	SF3	SF2	SF1	SF0
r	r	r	r	r	r	r	r	r	r	r	r	r	r	r	r

Bits	Fields	Descriptions
31:0	SFx	Semaphore flag Set by hardware, and clear by writing 1 to SIFCx bit in HWSEM_INTC register. 0: No semaphore unlock event occurs 1: A semaphore unlock event occurs

48.4.6. Interrupt flag register (HWSEM_INTF)

Address offset: 0x10C

Reset value: 0x0000 0000

This register has to be accessed by word (32-bit).

31	30	29	28	27	26	25	24	23	22	21	20	19	18	17	16
SIF31	SIF30	SIF29	SIF28	SIF27	SIF26	SIF25	SIF24	SIF23	SIF22	SIF21	SIF20	SIF19	SIF18	SIF17	SIF16
r	r	r	r	r	r	r	r	r	r	r	r	r	r	r	r

15	14	13	12	11	10	9	8	7	6	5	4	3	2	1	0
SIF15	SIF14	SIF13	SIF12	SIF11	SIF10	SIF9	SIF8	SIF7	SIF6	SIF5	SIF4	SIF3	SIF2	SIF1	SIF0
r	r	r	r	r	r	r	r	r	r	r	r	r	r	r	r

Bits	Fields	Descriptions
31:0	SIFx	Semaphore interrupt flag status Set by hardware, and clear by writing 1 to SIFCx bit in HWSEM_INTC register. 0: No pending interrupt 1: An interrupt is pending

48.4.7. Unlock register (HWSEM_UNLK)

Address offset: 0x140

Reset value: 0x0000 0000

This register has to be accessed by word (32-bit).

31	30	29	28	27	26	25	24	23	22	21	20	19	18	17	16
KEY[15:0]															
w															

15	14	13	12	11	10	9	8	7	6	5	4	3	2	1	0
Reserved				MID[3:0]				Reserved							
				w											

Bits	Fields	Descriptions
31:16	KEY[15:0]	Key value Write only, and read as 0. Only when the value of KEY[15:0] is matched with the KEY[15:0] bits in HWSEM_KEY register, all semaphores of the MID[3:0] which is controlled in this register will be unlocked.
15:12	Reserved	Must be kept at reset value.
11:8	MID[3:0]	Bus master identification to clear Write only, and read as 0. The semaphores of the AHB bus master which has the written value identiication is to be cleared.
7:0	Reserved	Must be kept at reset value.

48.4.8. Key register (HWSEM_KEY)

Address offset: 0x144

Reset value: 0x0000 0000

This register has to be accessed by word (32-bit).

31	30	29	28	27	26	25	24	23	22	21	20	19	18	17	16
KEY[15:0]															
rw															

15	14	13	12	11	10	9	8	7	6	5	4	3	2	1	0
Reserved															

Bits	Fields	Descriptions
31:16	KEY[15:0]	Key for unlocking all semaphores of a bus master The key for unlocking all semaphores.
15:0	Reserved	Must be kept at reset value.

49. Universal serial bus High-Speed interface (USBHS)

49.1. Overview

USB High-Speed (USBHS) controller provides a USB-connection solution for portable devices. USBHS supports both host and device modes, as well as OTG mode with HNP (Host Negotiation Protocol) and SRP (Session Request Protocol). USBHS contains an embedded USB PHY internal which can be configured as High-Speed or Full-Speed. USBHS supports all the four types of transfer (control, bulk, Interrupt and isochronous) defined in USB 2.0 protocol. There is also a DMA engine operating as an AHB bus master in USBHS to speed up the data transfer between USBHS and system. For Full-Speed operation, battery charging detection (BCD), attach detection protocol (ADP), and link power management (LPM) are also supported.

49.2. Characteristics

- Supports USB 2.0 Host mode at High-Speed(480Mb/s), Full-Speed(12Mb/s) or Low-Speed(1.5Mb/s)
- Supports USB 2.0 device mode at High-Speed(480Mb/s) or Full-Speed(12Mb/s)
- Supports OTG protocol with HNP (Host Negotiation Protocol) and SRP (Session Request Protocol)
- Supports all the 4 types of transfer: control, bulk, Interrupt and isochronous
- Supports high-bandwidth interrupt and isochronous transfers
- Includes USB transaction scheduler in host mode to handle USB transaction request efficiently
- Includes a 4KB FIFO RAM
- Supports 16 channels in host mode
- Contains 2 transmit FIFOs (periodic and non-periodic) and one receive FIFO (shared by all channels) in host mode
- Contains 8 transmit FIFOs (one for each IN endpoint) and one receive FIFO (shared by all OUT endpoints) in device mode
- Supports PING protocol in host mode when operates at High-Speed
- Supports 8 OUT and 8 IN Endpoints in device mode
- Supports remote-wakeup in device mode
- Include a USB PHY with OTG protocol supported
- Include an internal DMA scheduler and engine to perform data copy between USBHS and system per the application’s request
- Time intervals of SOFs is dynamic adjusted in host mode
- Able to output SOF pulse to PAD
- Able to detect ID level and VBUS voltage
- Needs external component to supply power for connected USB device in Host mode or

OTG A-device

- Supports charging port detection (BCD) described in Battery Charging Specification Revision 1.2
- Supports Attach Detection Protocol (ADP) described in USB On-The-Go Supplement, Revision 2.0
- Supports Link Power Management (LPM) described in USB 2.0 Link Power Management Addendum and Errata for USB 2.0 ECN: Link Power Management (LPM)

49.3. Block diagram

Figure 49-1. USBHS block diagram

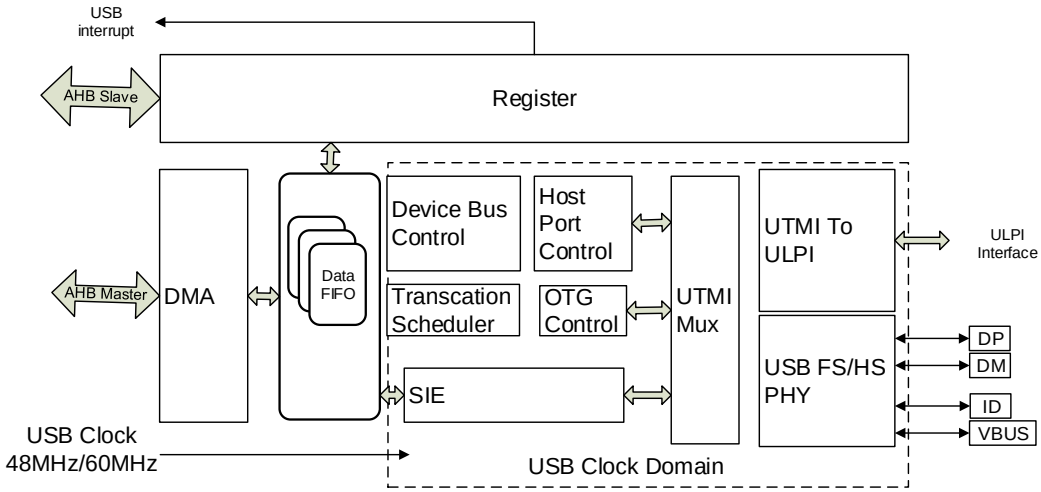

This series has two USB HS modules(USBHS0 and USBHS1), And both of which support ULPI interface. And high-speed operation is allowed with external HS transceivers.

49.4. Signal description

Table 49-1. USBHS signal description

I/0 port	Type	Description	Note
VBUS	Input	Bus power port	For internal PHY only
DM	Input/Output	Differential data line - port	For internal PHY only
DP	Input/Output	Differential data line + port	For internal PHY only
ID	Input	USB identification: Mini connector identification port	For internal PHY only
ULPI_D[7:0]	Input/Output	ULPI Data line	For external ULPI PHY
ULPI_NXT	Input	ULPI next line	For external ULPI PHY
ULPI_DIR	Input	ULPI Direction	For external ULPI PHY
ULPI_STP	Output	ULPI Stop	For external ULPI PHY
ULPI_CLK	Input	ULPI Clock	For external ULPI PHY

49.5. Function overview

49.5.1. USBHS PHY selection, clocks and working modes

USBHS can operate as a host, a device or a DRD (Dual-role-Device) and supports two types of connection: internal embedded PHY and external ULPI PHY. The application choose to use either the internal embedded PHY or the external ULPI PHY according to the demand.

The application may limit the maximum speed of the internal PHY or the external ULPI PHY to Full-Speed using SPDFSLS bit in USBHS_HCTL register in host mode or DS[1:0] in USBHS_DCFG register in device mode.

Table 49-2. USBHS supported speeds

Register configuration		Host supported speed	Device support speed
EMBPHY_FS=1 EMBPHY_HS=0 (Internal FS PHY)		Full-Speed Low-Speed	Full-Speed
EMBPHY_FS=0 EMBPHY_HS=1 (Internal HS PHY)	DS =01 (device mode) SPDFSLS=1(host mode)	Full-Speed Low-Speed	Full-Speed
	DS =00(device mode) SPDFSLS=0(host mode)	High-Speed Full-Speed Low-Speed	High-Speed Full-Speed
EMBPHY_FS=0 EMBPHY_HS=0 (External ULPI PHY)	DS =01 (device mode) SPDFSLS=1(host mode)	Full-Speed Low-Speed	Full-Speed
	DS =00(device mode) SPDFSLS=0(host mode)	High-Speed Full-Speed Low-Speed	High-Speed Full-Speed

The application control the working modes of USBHS: force host, force device by setting FHM and FDM bits in USBHS_GUSBCS register. When both bits are cleared, USBHS works in OTG mode, which is the default mode after system reset.

Internal embedded PHY

USBHS includes an internal embedded PHY. The internal embedded PHY supports High-Speed, Full-Speed and Low-Speed in host mode, and High-Speed, Full-Speed in device mode, supports OTG protocol with HNP and SRP. Software needs to set EMBPHY_FS bit and reset EMBPHY_HS in USBHS_GUSBCS register to use this PHY in FS mode, or reset EMBPHY_FS bit and set EMBPHY_HS to use this PHY in HS mode. If internal embeddedPHY is selected, the USB clock used for the USBHS needs to be 48MHz in FS mode and 60MHz in HS mode. The 48MHz USB clock is generated from internal clocks in system, and its source and divider factors are configurable in RCU, while the 60MHz USB clocks is generated from 480MHz PLLUSB.

The pull-up and pull-down resistors are already integrated into the internal PHY and controlled

by USBHS automatically based on the current mode (host, device or OTG mode) and connection status. A typical connection using internal PHY is shown in ***Figure 49-2. Connection using internal embedded PHY with host or device mode***.

Figure 49-2. Connection using internal embedded PHY with host or device mode

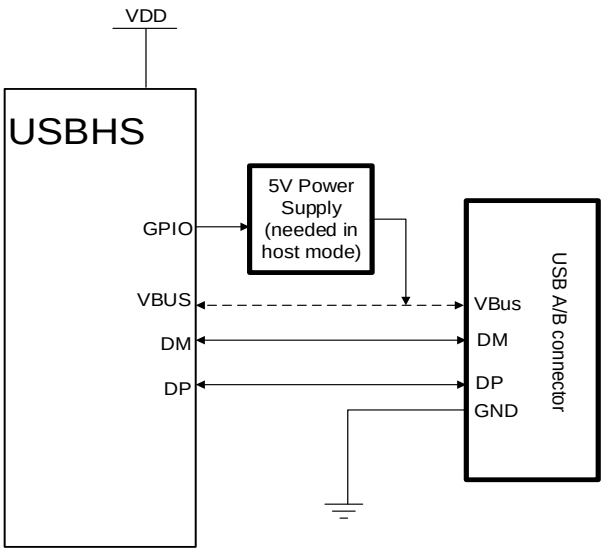

When USBHS works in host mode (FHM bit is set and FDM bit is cleared), the VBUS is 5V power pin defined in USB protocol. The internal PHY cannot supply 5V VBUS power and only has some voltage comparers, charge and dis-charge circuit on VBUS line. If application needs to supply USB power, an external power supply IC is needed. The VBUS connection between USBHS and the USB connector can be omitted in host mode because USBHS doesn't detect the voltage level on VBUS pin and always assumes that the 5V power is present.

When USBHS works in device mode (FHM bit is cleared and FDM bit is set), the VBUS detection circuit is decided by VDEN bit in USBHS_GCCFG register. If the device does not need to detect the voltage on VBUS pin, it may set the VDEN bit and free the VBUS pin for other use. Otherwise, the VBUS connection cannot be omitted, and USBHS continuously monitor the VBUS voltage and will immediately switch off the pull-up resistor on DP line once the VBUS voltage falls below the needed valid value. This will cause a disconnection.

The OTG mode connection is described in the ***Figure 49-3. Connection using internal embedded PHY with OTG mode***. When USBHS works in OTG mode, the FHM, FDM bits in USBHS_GUSBCS and VDEN bit in USBHS_GCCFG should be cleared. In this mode, the USBHS needs all the four pins: DM, DP, VBUS and ID, and uses several voltage comparers to monitor the voltage on these pins. USBHS also includes VBUS charge and discharge circuit to perform SRP request described in OTG protocol. The OTG A-Device or B-Device is decided by the level of ID pins. USBHS controls the pull-up or pull-down resistor during the HNP protocol.

Figure 49-3. Connection using internal embedded PHY with OTG mode

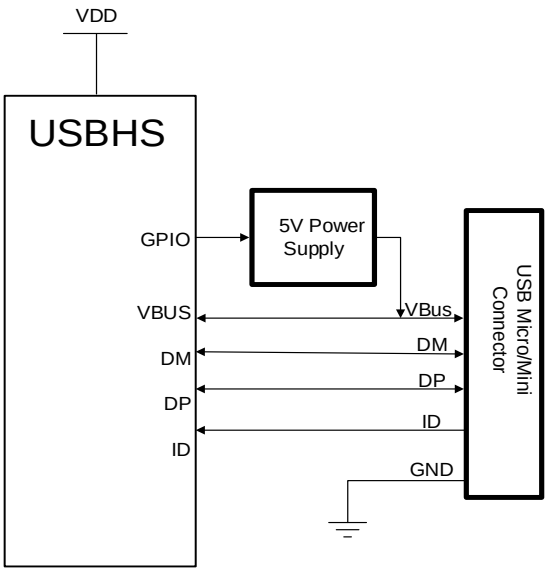

External ULPI PHY

USBHS provides a ULPI interface for external PHY integration. An external High-Speed ULPI PHY is needed to support High-Speed USB applications. With external ULPI PHY, USBHS supports High-Speed host and device, all the modes described in internal embedded PHY.

Software needs to clear the EMBPHY_FS bit and EMBPHY_HS bit in USBHS_GUSBCS register to enable the ULPI interface. When ULPI mode enabled, the USB clock which introduced from the ULPI_CLK pin needs to be 60MHz.Software can switch on or off the 60MHz ULPI clock in RCU.

Figure 49-4. Connection using external ULPI PHY

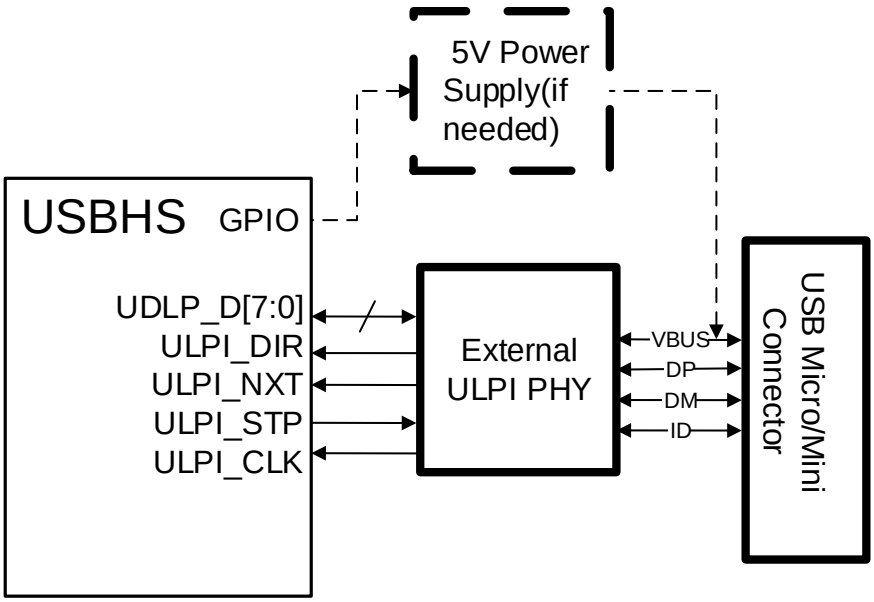

49.5.2. USB host function

USB Host Port State

Host application may control state of the USB port via USBHS_HPCS register. After system initialization the USB port, keep it at power-off state. After PP bit is set by software, the USB PHY (either internal or external) is powered on, and the USB port changes into disconnected state. After a connection is detected, USB port changes into connected state. The USB port changes into enabled state after a port reset is performed on USB bus.

Figure 49-5. State transition diagram of host port

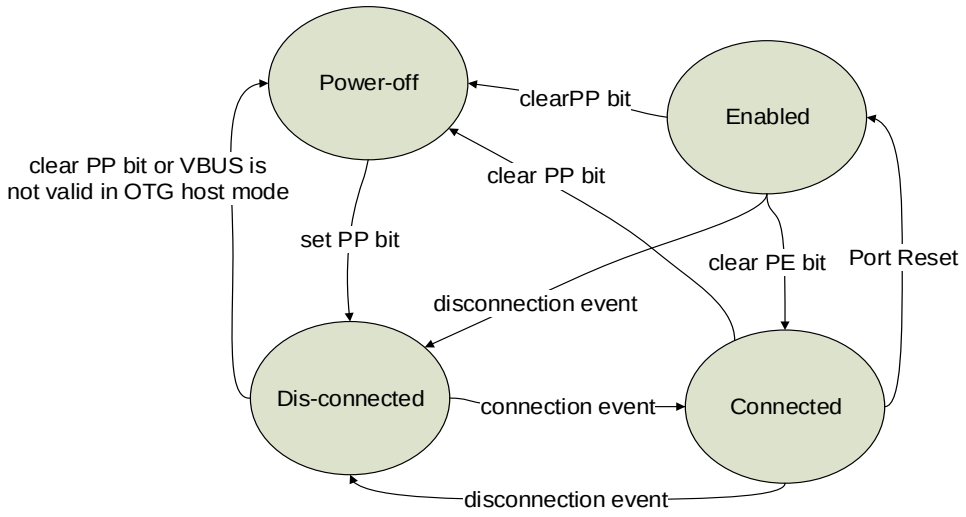

Connection, Reset and Speed identification

As a USB host, USBHS will trigger a connection flag for application after a connection is detected and will trigger disconnection flag after a disconnection event.

PRST bit is used for USB reset sequence. Application may set this bit to start a USB reset and clear this bit to finish the USB reset. This bit only takes effect when port is at connection or enabled state.

The USBHS performs speed identification during connection and reset, and the speed information is reported in PS[1:0] bits in USBHS_HPCS register.

If the maximum supported speed is configured to Full-Speed (SPDFSLS = 1), USBHS only performs speed-identification during device connection process and it identifies the device speed from the voltage level of DM or DP. As is described in USB protocol, Full-Speed device pulls up DP line while Low-Speed device pulls up DM line.

If the maximum supported speed is configured to High-Speed (SPDFSLS = 0), USBHS first performs speed-identification during connection. If a Full-Speed connection is detected, the USBHS will try to perform High-Speed identification (CHIRP sequence described in USB 2.0 protocol) during each USB reset sequence after the connection event. So the application on host should perform a USB reset after a connection event and check the PS[1:0] bits again if

it desires to support High-Speed device.

Suspend and resume

USBHS supports suspend state and resume operation. When USBHS port is at enabled state, writing 1 to PSP bit in USBHS_HPCS register will cause USBHS to enter suspend state. In suspend state, USBHS stops sending SOFs on USB bus and this will cause the connected USB device to enter suspend state after 3ms. Application can set the PREM bit in USBHS_HPCS register to start a resume sequence to wake up the suspended device and clear this bit to stop the resume sequence. The WKUPIF bit in USBHS_GINTF and the USBHS wake up interrupt will be triggered if a host in suspend state detects a remote wakeup signal.

SOF generate

USBHS sends SOF tokens on USB bus in host mode. As described in USB 2.0 protocol, SOF packets are generated (by the host controller or hub transaction translator) every 1ms for Full-Speed links, and every 125 μs for High-Speed links.

Each time after USBHS enters into enabled state, it will send SOF packet using the time defined by USB 2.0 protocol. While, application may adjust the length of a frame or a micro-frame by writing to FRI[15:0] in USBHS_HFT registers. The FRI bits define the number of USB clock cycles in a frame or micro-frame and application should calculate the value based on the frequency of USB clock used by USBHS. The FRT[14:0] bits reflect the remaining clock cycles of the current frame or micro-frame and stops to change during suspend state.

USBHS is able to generate a pulse signal each SOF packet and output it to a pin. The pulse length is 12 HCLK cycle. If application desires to use this function, it needs to set SOFOEN bit in USBHS_GCCFG register and configure the related pin registers in GPIO.

USB Channels and Transactions

USBHS includes 16 independent channels in host mode. Each channel is able to communicate with an endpoint in USB device. The transfer type, direction, packet length and other information is configured in channel related registers such as USBHS_HCHxCTL and USBHS_HCHxLEN.

USBHS supports all the four kinds of transfer types: control, bulk, interrupt and isochronous. USB 2.0 protocol divides these transfers into 2 kinds: non-periodic transfer (control and bulk) and periodic transfer (interrupt and isochronous). Based on this, USBHS includes two request queues: periodic request queue and non-periodic request queue, in order to perform efficient transaction schedule. A request entry in a request queue described above may represent a USB transaction request or a channel operation request.

In non-DMA mode, application needs to write packet into data FIFO via AHB register interface if it wants to start an OUT transaction on USB bus. USBHS hardware will automatically generate a transaction request entry in request queue after the application writes a whole packet. In DMA mode, application only needs to configure the channel property and channel data buffer address, and the DMA engine in USBHS performs the packet data copy and

request entry generation. USBHS automatically generate IN request entries when the application enable an IN channel.

The request entries in request queue are processed in order by transaction control module. USBHS always try to process periodic request queue first, then process non-periodic request queue.

After a start of frame USBHS begins to process periodic queue until the queue is empty or bus time required by the current periodic request is not enough, and then process the non-periodic queue. This strategy ensures the bandwidth of periodic transactions in a frame or micro-frame. Each time the USBHS reads and pop a request entry from request queue. If this is a channel disable request, it immediately disables the channel and prepare to process next entry.

If the current request is a transaction request and the USB bus time is enough for this transaction, USBHS will employ SIE to generate this transaction on USB bus.

When the required bus time by the current request is not enough in the current frame, if this is a periodic request, USBHS stops the processing of periodic queue and starts to process non-periodic request. If this is a non-periodic queue the USBHS will stop to process any queue and wait until the end of current frame.

LPM

This addendum for USB defines power management states (LPM states) and mechanisms to affect state changes that are used by hosts and hubs to efficiently manage bus and system power. LPM simply adds a new feature and bus state sleep state (L1) that co-exists with the USB2.0 defined suspend (L2)/resume.

L1 is similar to L2 but supports finer granularity in use. Entry to L1 is started by a request to a hub or host port to transition to L1. A LPM transaction is sent to the downstream device. The requested transition can only occur if the device response with an ACK handshake. Exit from L1 is via remote wake, resume signaling, reset signaling or disconnect. Either the host or device can initiate resume signaling when in L1. Although the signaling levels of resume are the same as L2, the duration of the signaling and transitional latencies associated with the L1 to L0 (active state) transition are much shorter.

49.5.3. USB device function

USB Device Connection

In device mode USBHS stays at power-off state after initialization. After connected to a USB host with 5V power supply present on VBUS pin or setting VDEN bit in USBHS_GCCFG register, USBHS enters into powered state. USBHS begins to switch on the pull-up resistor on DP line, host side will detect a connection event.

Reset and Speed-Identification

The USB host always starts a USB reset after it detects a device connection, USBHS in device

mode will trigger a reset interrupt for software after it detects the reset event on USB bus.

If the maximum supported speed is configured to Full-Speed (DS[1:0] = 01 in USBHS_DCFG register), USBHS will operate as a Full-Speed device. If the maximum supported speed is configured to High-Speed (DS[1:0] = 00 in USBHS_DCFG register), USBHS device tries to start a speed-identification (a chirp handshake described in USB 2.0 protocol) with host during reset sequence. If the chirp handshake with host successes, the device enters High-Speed mode, otherwise, remains at Full-Speed mode.

After reset sequence, speed-identification process completes, USBHS triggers an ENUMF interrupt in USBHS_GINTF register and reports current enumerated device speed in ES bits in USBHS_DSTAT register. If software want to implement a High-Speed device, it must wait ENUMF interrupt first, then read the ES[1:0] bits to get the speed-identification result.

As required by USB 2.0 protocol, USBHS doesn’t support Low-Speed in device mode.

Suspend and Wake-up

A USB device will enter into suspend state after the USB bus stays at IDLE state and has no change on data lines for 3ms. When USB device is in suspend state, software can switch off most of its clock to save power. The USB host is able to wake up the suspended device by generating a resume signal on USB bus. USBHS is able to detect the resume signal and triggers the WKUPIF flag in USBHS_GINTF register and the USBHS wake up interrupt.

In suspend mode, USBHS is also able to remote wake-up the USB bus. Software may set RWKUP bit in USBHS_DCTL register to sends a remote-wake-up signal, and if remote-wake up is supported in USB host, the host will begin to send resume signal on USB bus.

Soft Disconnection

USBHS supports soft disconnection. After the device is power on, USBHS will switch on the pull-up resistor on DP line and this will cause the host to detect the connection. Then, software is able to force a disconnection by setting the SD bit in USBHS_DCTL register. After the SD bit is set, if the current device speed is High-Speed, USBHS will first return back to Full-Speed device and then switch off the pull-up resistor on DP line, and if current speed is Full-Speed, USBHS will directly switch off the pull-up resistor. This will cause USB host to detect a disconnection on USB bus.

SOF tracking

When USBHS receives a SOF packet from USB bus, it triggers a SOF interrupt and begins to count the bus time by using local USB clock. The frame number of the current frame is reported in FNRSOF[13:0] in USBHS_DSTAT register. When the USB bus time reaches EOF1 or EOF2 point (End of Frame, described in USB 2.0 protocol), USBHS will trigger a interrupt EOPFIF in USBHS_GINTF register. Software is able to use these flags and registers to get current bus time and position information.

BCD

Charging port detection (BCD) described in Battery Charging Specification Revision 1.2 is

supported. In order for PD (portable device) to determine how much current it is allowed to draw from an upstream USB port, there need to be mechanisms that allow the PD to distinguish between a Standard Downstream Port and a Charging Port.

In BCD mechanisms, USB VBUS detection (VD), data contact detection (DCD), primary detection (PD) and secondary detection (SD) are included. The control and configuration bits about BCD is reported in USBHS_GCCFG register.

49.5.4. OTG function overview

USBHS supports OTG function described in OTG protocol 1.3/2.0. OTG function includes SRP and HNP protocols.

A-Device and B-Device

A-Device is an OTG capable USB device with a Standard-A or Micro-A plug inserted into its receptacle. The A-Device supplies power for VBUS and it is host at the start of a session. B-Device is an OTG capable USB device with a Standard-B, Micro-B or Mini-B plug inserted into its receptacle, or a captive cable ending in a Standard-A plug. The B-Device is a peripheral at the start of a session. USBHS uses the voltage level of ID pin to judge A-Device or B-Device. The ID status is reported in IDPS bit in USBHS_GOTGCS register. For the details of states transfer between A-Device and B-Device, please refer to OTG 1.3/2.0 protocol.

HNP

The Host Negotiation Protocol (HNP) allows the host function to be transferred between two directly connected On-The-Go devices and eliminates the need for a user to switch the cable connections in order to allow a change in control of communications between the devices. HNP will typically be initiated by the user or an application on the On-The-Go B-device. HNP may only be implemented through the Micro-AB receptacle on a device.

Since On-The-Go devices have a Micro-AB receptacle, an On-The-Go device can default to being either Host or Peripheral, depending upon which type of plug (Micro-A plug for Host, Micro-B plug for Peripheral) is inserted. By utilizing the Host Negotiation Protocol (HNP), an On-The-Go B-Device, which is the default Peripheral, may make a request to be Host. The process for this exchange of the role of Host is described in this section. This protocol eliminates the need for the user to swap the cable connection in order to change the roles of the connected devices.

When USBHS is in OTG A-Device host mode and it wants to give up its host role, it may first set PSP bit in USBHS_HPCS register to make the USB bus enter suspend status. Then, the B-device will enter suspend state after 3ms. If the B-Device wants to changes to host, software needs to set HNPREQ bit in USBHS_GOTGCS register and the USBHS will begin to perform HNP protocol on bus, and at last, the result of HNP is reported in HNPS bit in USBHS_GOTGCS register. Besides, software is always able to get the current role (host or peripheral) from COPM bit in USBHS_GINTF register.

SRP

The Session Request Protocol (SRP) allows a B-Device to request the A-Device to turn on VBUS and start a session. This protocol allows the A-Device, which may be battery powered, to conserve power by turning VBUS off when there is no bus activity while still providing a means for the B-Device to initiate bus activity. As described in OTG protocol, an OTG device must compare VBUS voltage with several threshold values and the compare result is reported in ASV and BSV bits in USBHS_GOTGCS register.

Software may set SRPREQ bit in USBHS_GOTGCS register to start a SRP request when USBHS is in B-Device OTG mode and USBHS will generate a success flag SRPS in USBHS_GOTGCS register if the SRP request successes.

When USBHS is in OTG A-Device mode and it detects an SRP request from a B-Device, it sets a SESIF flag in USBHS_GINTF register. The software should prepare to switch on the 5V power supply for VBUS pin after it gets this flag.

ADP

Attach Detection Protocol (ADP) is a protocol that allows a local device to detect when a remote device has been attached or detached. The remote device can be any USB device. ADP operates by detecting the change in VBUS capacitance that occurs when two devices are attached or detached. The capacitance is detected by first discharging the VBUS line, and then measuring the time it takes VBUS to charge to a known voltage with a known current source. A change in capacitance is detected by looking for a change in the charge time.

Software may set bit ADPMEN, ADPEN and ENAPRB to perform ADP probe, and should perform at least one ADP probe cycle in order to obtain an initial value for TADP_RISE when an ADP-capable A-device or B-device is first powered up. For B-device, ADP sense can be performed by setting bit ENASNS. If RITM in USBHS_ADPCTL register changes, it shows that a remote device has been attached or detached.

49.5.5. Data FIFO

The USBHS include a 4K bytes data FIFO to store packet data. The data FIFO is implemented by using an internal SRAM.

Host Mode

In host mode the data FIFO space is divided into 3 parts: Rx FIFO for received packet, Non-Periodic Tx FIFO for non-period transmission packet and Periodic Tx FIFO for periodic transmission packet. All IN channels shares the Rx FIFO for receiving packets. All the periodic OUT channels share the periodic Tx FIFO to transmit packets. All the non-periodic OUT channels share the non-Periodic FIFO for transmit packets. Software should configure the size and start offset of these data FIFOs by use these registers: USBHS_GRFLEN, USBHS_HNPTFLEN and USBHS_HPTFLEN. ***Figure 49-6. Host mode FIFO space in SRAM*** describes the structure of these FIFOs in SRAM. The values in the figure are in term of 32-bit words.

Figure 49-6. Host mode FIFO space in SRAM

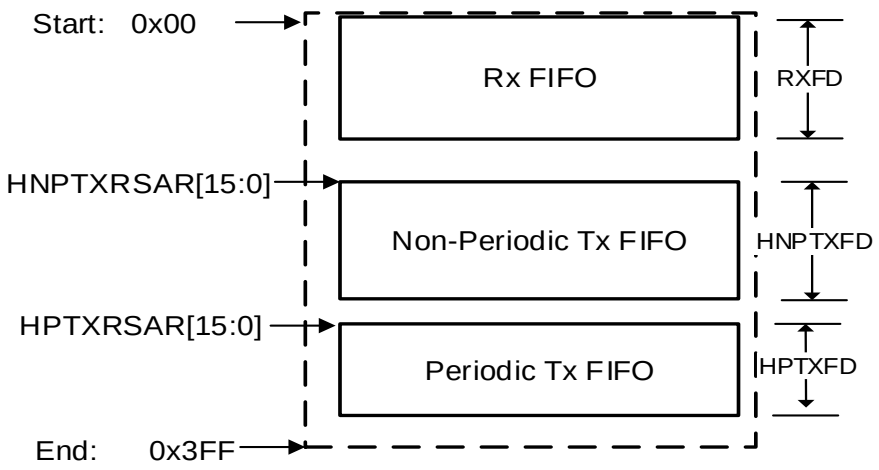

In DMA mode, DMA engine is responsible for packet data copy between system memory and the internal data FIFOs. In non-DMA mode the application needs to manually write packet data into or read packet from the data FIFOs. USBHS provides a special register area for software to write and read the internal data FIFO. ***Figure 49-7. Host mode FIFO access register map*** describes the register memory area for data FIFO access. The addresses in the figure are in term of byte. Each channel has its own FIFO access register space, although all Non-periodic channels share the same FIFO and all the Periodic channels share the same FIFO. This is important for USBHS to know the current pushed packet belongs to which channel. Rx FIFO is also able to be accessed by using USBHS_GRSTATR/USBHS_GRSTATP register.

Figure 49-7. Host mode FIFO access register map

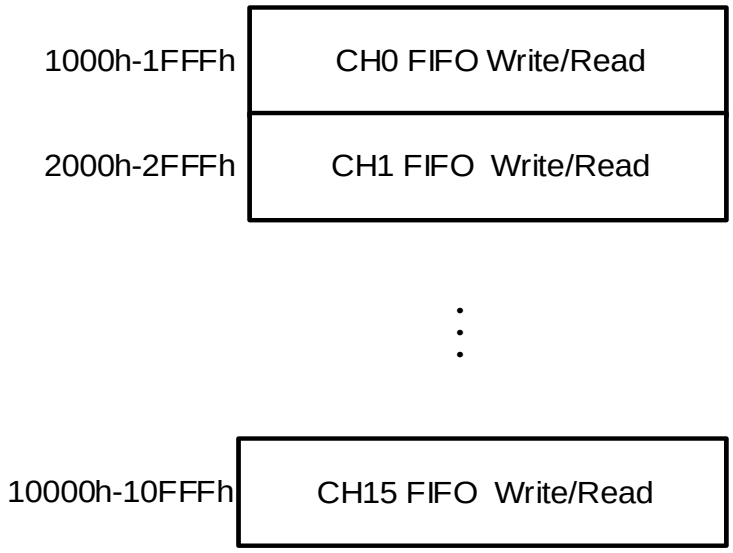

Device mode

In device mode, the data FIFO is divided into several parts: one Rx FIFO, and 8 Tx FIFOs (one for each IN endpoint). All the OUT endpoints share the Rx FIFO for receiving packets.

Software should configure the size and start offset of these data FIFOs by using USBHS_GRFLEN and USBHS_DIEPxTFLEN (x=0...7) registers. ***Figure 49-8. Device mode FIFO space in SRAM*** describes the structure of these FIFOs in SRAM. The values in the figure are in term of 32-bit words.

Figure 49-8. Device mode FIFO space in SRAM

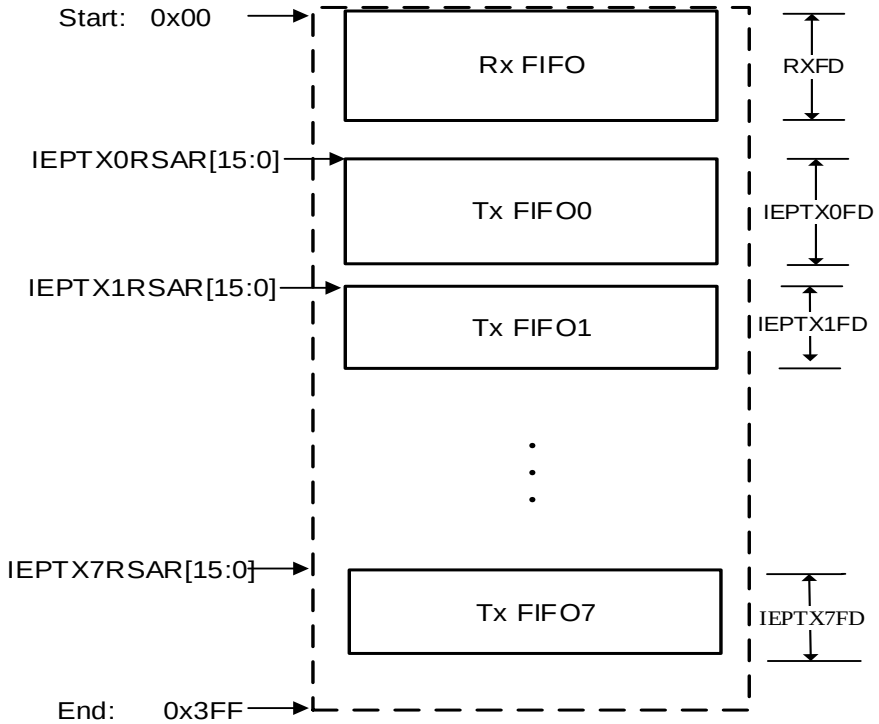

In DMA mode, DMA engine is responsible for packet data copy between system memory and the internal data FIFOs. In non-DMA mode the application needs to manually write packet data into or read packet from the data FIFOs. USBHS provides a special register area for software to write and read the internal data FIFO. ***Figure 49-9. Device mode FIFO access register map*** describes the register memory area for data FIFO access. The addresses in the figure are in term of byte. Each endpoint has its own FIFO access register space. Rx FIFO is also able to be accessed by using USBHS_GRSTATR/USBHS_GRSTATP register.

Figure 49-9. Device mode FIFO access register map

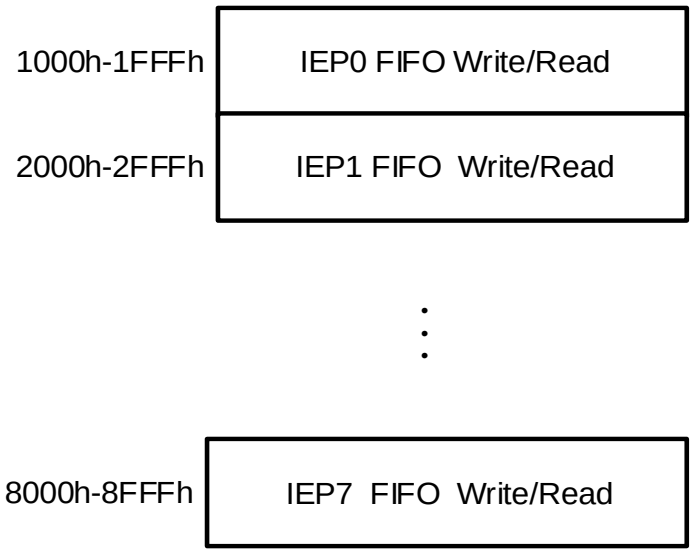

49.5.6. DMA function

This section describes the DMA scheduler and DMA engine in USBHS.

DMA Requests and Scheduler

DMA function is enabled by setting DMAEN bit in USBHS_GAHBCS register. When an IN/OUT channel or IN endpoint is properly configured and enabled, or the Rx FIFO is not empty, USBHS will generate DMA request. There is a DMA scheduler in USBHS responsible for responding to theses DMA requests.

There may be several requests simultaneously and the DMA scheduler arbitrates among these requests. These requests are sorted into 3 kinds: Rx FIFO DMA request, periodic transfer DMA requests and non-periodic transfer DMA requests. Rx FIFO DMA request takes the highest priority, and periodic transfer DMA requests take the medium priority, and non-periodic transfer DMA requests take the lowest priority when arbitration. DMA scheduler performs round-robin arbitration method within the periodic or non-periodic transfer DMA requests.

As is described above, DMA will automatically handle the Rx FIFO not empty event, so software should ignore the RXFNEIF flag in USBHS_GINTF register in DMA mode.

DMA Engine

Receive:

In host or device mode, once Rx FIFO DMA request gets arbitration, DMA engine begins to read a packet or a status entry from Rx FIFO. For data packet, DMA write the data into the specified system address configured in the HCHxDMAADDR register or DIEPxDMAADDR/DOEPxDMAADDR register. For status entry, DMA will generate the specified flags or interrupts on related channels or endpoints.

Host Transfer:

When a periodic or non-periodic IN channel DMA request gets arbitration, DMA writes IN request entries into the periodic or non-periodic request queue. After the desired IN transfers completes, or an AHB/USB bus error occurs, DMA halts the specified channel and generate TF and CH flags in USBHS_HCHxINTF register. The received packet during IN transfers copied into system memory after the Rx FIFO DMA request is generated, as described above.

When an OUT periodic or non-periodic channel DMA request gets arbitration, DMA reads packet data from system memory and writes to internal Tx FIFO. DMA always writes an OUT request entry into the request queue when it finishes a packet data copying. After the desired OUT transfers completes, or an AHB/USB bus error occurs, DMA halt the specified channel and generate TF and CH flags in USBHS_HCHxINTF register.

Device Transfer:

In device mode, when an IN endpoint DMA request gets arbitration, DMA reads packet data from system memory and writes to the endpoint's Tx FIFO. When USBHS gets an IN token on an IN endpoint, it transmits the packet copied by DMA engine.

49.5.7. Operation guide

This section describes the advised operation guide for USBHS.

Host mode

Global register initialization sequence

1. Program USBHS_GAHBCS register according to application's demand, such as: whether to enable DMA, burst type of DMA transfer and the TxFIFO's empty threshold, etc. GINTEN bit should be kept cleared at this time.
2. Program USBHS_GUSBCS register according to application's demand, such as: the operation mode (host, device or OTG) and some parameters of OTG, ULPI and USB protocols.
3. Program USBHS_GCCFG register according to application's demand.
4. Program USBHS_GRFLEN, USBHS_HNPTFLEN_DIEP0TFLEN and USBHS_HPTFLEN registers to configure the data FIFOs according to application's demand.
5. Program USBHS_GINTEN register to enable Mode Fault and Host Port interrupt and set GINTEN bit in USBHS_GAHBCS register to enable global interrupt.
6. Program SPDFSLS bit in USBHS_HCTL register to select whether to limit the device speed to Full-Speed.
7. Program USBHS_HPCS register and set PP bit.

8. Wait for a device's connection, and once a device is connected, the connection interrupt PCD in USBHS_HPCS register will be triggered. Then set PRST bit to perform a port reset. Wait for at least 10ms and then clear PRST bit.

9. Wait PEDC interrupt in USBHS_HPCS register and then read PE bit to ensure that the port is successfully enabled. Read PS[1:0] bits to get the connected device's speed and then program USBHS_HFT register if software want to change the SOF interval.

Channel initialization and enable sequence

1. Program USBHS_HCHxCTL register with desired transfer type, direction, packet size, etc. Ensure that CEN and CDIS bits keep cleared during configuration.

2. Program USBHS_HCHxINTEN register. Set the desired interrupt enable bits.

3. If DMA is enabled, program USBHS_HCHxDMAADDR register.

4. Program USBHS_HCHxLEN register. PCNT is the number of packets in a transfer and TLEN is the total bytes number of all the transmitted or received packets in a transfer.

   For OUT channel: If PCNT=1, the single packet's size is equal to TLEN. If PCNT>1, the former PCNT-1 packets are considered as max-packet-length packets whose size are defined by MPL field in USBHS_HCHxCTL register, and the last packet's size is calculated based on PCNT, TLEN and MPL. If software wants to send out a zero-length packet, it should program TLEN=0, PCNT=1.

   For IN channel: Because the application doesn't know the actual received data size before the IN transaction finishes, software may program TLEN as a maximum possible value supported by Rx FIFO.

5. Set CEN bit in USBHS_HCHxCTL register to enable the channel.

Channel disable sequence

Software can disable the channel by setting both CEN and CDIS bits at the same time. USBHS will generate a channel disable request entry in request queue after the register setting operation. When the request entry reaches to the top of request queue, it is processed by USBHS immediately:

For OUT channel, the specified channel will be disabled immediately. Then, a CH flag will be generated and the CEN and CDIS bits will be cleared by USBHS.

For IN channels, USBHS pushes a channel disable status entry into Rx FIFO. Software should then handle the Rx FIFO not empty event: read and pop this status entry, then, a CH flag will be generated and the CEN and CDIS bits will be cleared.

IN transfers operation sequence with DMA disabled

1. Initialize USBHS global registers.

2. Initialize the channel.

3. Enable the channel.
4. After the IN channel is enabled by software, USBHS generates a Rx request entry in the corresponding request queue.
5. When the Rx request entry reaches to the top of the request queue, USBHS begins to process this request entry. If bus time for the IN transaction indicated by the request entry is enough, USBHS starts the IN transaction on USB bus.
6. If the IN transaction finishes successfully (ACK handshake received), USBHS pushes the received data packet into the Rx FIFO and triggers ACK flag. Otherwise, the status flag (NAK) report the transaction result.
7. If the IN transaction described in step 5 is successful and PCNT is larger than 1 in step2, software should return to step 3 and continues to receive the remaining packets. If the IN transaction described in step 5 is not successful, software should return to step 3 to re-receive the packet again.
8. After all the transactions in a transfer are successful received on USB bus, USBHS push a TF status entry into the Rx FIFO on top of the last packet data. After software reads and pops all the received data packet, and at last, the TF status entry, USBHS generates TF flag to indicate that the transfer successfully finishes.
9. Disable the channel. Now the channel is in IDLE state and is ready for other transfers.

IN transfers operation sequence with DMA enabled

1. Initialize USBHS global registers.
2. Initialize and enable the channel.
3. After the IN channel is enabled by software, USBHS begins to generate Rx request entry in the corresponding request queue.
4. USBHS processes the request entries in request queue one by one and perform the indicated IN transactions on USB bus.
5. When a IN transaction gets a NAK handshake, the DMA is able to re-send IN tokens automatically until that USBHS get the desired number of packets.
6. After USBHS gets the desired number of packets specified by PCNT in USBHS_HCHxLEN register, USBHS generates TF and CH flags to indicate that the transfer successfully finishes and the channel is disabled. If USB bus error or DMA write error occurs during these transactions, DMA will trigger related error flags, stops the processing for this channel, disable this channel and at last, trigger the CH flag.

Note: In DMA mode, software should not enable or process the RXFNEIF interrupt because the DMA will automatically process the Rx FIFO.

OUT transfers operation sequence with DMA disabled

1. Initialize USBHS global registers.

2. Initialize and enable the channel.
3. Write a packet into the channel's Tx FIFO (Periodic Tx FIFO or non-periodic Tx FIFO). After the whole packet data is written into the FIFO, USBHS generates a Tx request entry in the corresponding request queue and decrease the TLEN field in USBHS_HCHxLEN register with the written packet's size.
4. When the request entry reaches to the top of the request queue, USBHS begins to process this request entry. If bus time for the transaction indicated by the request entry is enough, USBHS starts the OUT transaction on USB bus.
5. When the OUT transaction indicated by the request entry finishes on USB bus, PCNT in USBHS_HCHxLEN register is decreased by 1. If the transaction finishes successfully (ACK handshake received), the ACK flag is triggered. Otherwise, the status flag (NAK) report the transaction result.
6. If the OUT transaction described in step 5 is successful and PCNT is larger than 1 in step2, software should return to step 3 and continues to send the remaining packets. If the OUT transaction described in step 5 is not successful, software should return to step 3 to resend the packet again.
7. After all the transactions in a transfer are successful sent on USB bus, USBHS generates TF flag to indicate that the transfer successfully finishes.
8. Disable the channel. Now the channel is in IDLE state and is ready for other transfers.

OUT transfers operation sequence with DMA enabled

1. Initialize USBHS global registers.
2. Initialize and enable the channel.
3. DMA in USBHS begins to fetch packets from the address specified by DMAADDR in USBHS_HCHxDMAADDR register and write them into the channel's Tx FIFO (Periodic Tx FIFO or non-periodic Tx FIFO). Each time a whole packet data is written into the FIFO, USBHS generates a Tx request entry in the corresponding request queue and decrease the TLEN field in USBHS_HCHxLEN register with the written packet's size.
4. USBHS processes the request entries in request queue one by one and sends out the indicated transactions on USB bus.
5. When a transaction gets a NAK or NYET handshake, the DMA is able to re-fetch and re-send the packet as well as perform PING protocol automatically.
6. If all the transactions are successful sent on USB bus, USBHS generates TF and CH flags to indicate that the transfer successfully finishes and the channel is disabled. If USB bus error or DMA fetch error occurs during these transactions, DMA will trigger related error flags, stops the processing for this channel, disable this channel and at last, trigger the CH flag.

Note: In DMA mode, software should not enable or process the RXFNEIF interrupt because

the DMA will automatically process the Rx FIFO.

Device mode

Global register initialization sequence

1. Program USBHS_GAHBCS register according to application's demand, such as: whether to enable DMA, burst type of DMA transfer and the TxFIFO's empty threshold, etc. GINTEN bit should be kept cleared at this time.
2. Program USBHS_GUSBCS register according to application's demand, such as: the operation mode (host, device or OTG) and some parameters of OTG, ULPI and USB protocols.
3. Program USBHS_GCCFG register according to application's demand.
4. Program USBHS_GRFLEN, USBHS_HNPTFLEN_DIEP0TFLEN and USBHS_DIEPxTFLEN registers to configure the data FIFOs according to application's demand.
5. Program USBHS_GINTEN register to enable Mode Fault, Suspend, SOF, Enumeration Done and USB Reset interrupt and then, set GINTEN bit in USBHS_GAHBCS register to enable global interrupt.
6. Program USBHS_DCFG register according to application's demand, such as the device speed and device address, etc.
7. After the device is connected to a host, the host will perform port reset on USB bus and this will trigger the RST interrupt in USBHS_GINTF register.
8. Wait for ENUMF interrupt in USBHS_GINTF register and then read ES[1:0] bits in USBHS_DSTAT register to get the current enumerated device speed.

Endpoint initialization and enable sequence

1. Program USBHS_DIEPxCTL or USBHS_DOEPxCTL register with desired transfer type, packet size, etc.
2. Program USBHS_DIEPINTEN or USBHS_DOEPINTEN register. Set the desired interrupt enable bits.
3. If DMA is enabled, program USBHS_DIEPxDMAADDR or USBHS_DOEPxDMAADDR register.
4. Program USBHS_DIEPxLEN or USBHS_DOEPxLEN register. PCNT is the number of packets in a transfer and TLEN is the total bytes number of all the transmitted or received packets in a transfer.

   For IN endpoint：If PCNT=1, the single packet's size is equal to TLEN. If PCNT>1, the former PCNT-1 packets are considered as max-packet-length packets whose size are defined by MPL field in USBHS_DIEPxCTL register, and the last packet's size is

calculated based on PCNT, TLEN and MPL. If software wants to send out a zero-length packet, it should program TLEN=0, PCNT=1.

For OUT endpoint：Because the application doesn't know the actual received data size before the OUT transaction finishes, software may program TLEN as a maximum possible value supported by Rx FIFO.

5. Set EPEN bit in USBHS_DIEPxCTL or USBHS_DOEPxCTL register to enable the endpoint.

Endpoint disable sequence

Software can disable the endpoint anytime when clearing the EPEN bit in USBHS_DIEPxCTL or USBHS_DOEPxCTL register.

IN transfers operation sequence with DMA disabled

1. Initialize USBHS global registers.
2. Initialize and enable the IN endpoint.
3. Write packets into the endpoint's Tx FIFO. Each time a data packet is written into the FIFO, USBHS decreases the TLEN field in USBHS_DIEPxLEN register with the written packet's size.
4. When an IN token is received, USBHS transmit the data packet, and after the transaction finishes on USB bus, PCNT in USBHS_DIEPxLEN register is decreased by 1. If the transaction finishes successfully (ACK handshake received), the ACK flag is triggered. Otherwise, the status flags report the transaction result.
5. After all the data packets in a transfer are successful sent on USB bus, USBHS generates TF flag to indicate that the transfer successfully finishes and disable the IN endpoint.

IN transfers operation sequence with DMA enabled

1. Initialize USBHS global registers.
2. Initialize and enable the IN endpoint.
3. DMA in USBHS begins to fetch packets from the address specified by DMAADDR in USBHS_DIEPxDMAADDR register and write them into the IN endpoint's Tx FIFO. Each time a whole packet data is written into the FIFO, USBHS decreases the TLEN field in USBHS_DIEPxLEN register with the written packet's size.
4. When an IN token is received, USBHS transmit the data packet, and after the transaction finishes on USB bus, PCNT in USBHS_DIEPxLEN register is decreased by 1. If the transaction finishes successfully (ACK handshake received), the ACK flag is triggered. Otherwise, the status flags report the transaction result.
5. If all the transactions are successful sent on USB bus, USBHS generates TF and EPDIS flags to indicate that the transfer successfully finishes and the endpoint is disabled. If USB bus error or DMA fetch error occurs during these transactions, DMA will trigger related

error flags.

Note: In DMA mode, software should not enable or process the RXFNEIF interrupt because the DMA will automatically process the Rx FIFO.

OUT transfers operation sequence with DMA disabled

1. Initialize USBHS global registers.
2. Initialize the endpoint and enable the endpoint.
3. When an OUT token is received, USBHS receive the data packet or response with an NAK handshake based on the status of Rx FIFO and register configuration. If the transaction finishes successfully (USBHS receives and saves the data packet into Rx FIFO successfully and sends ACK handshake on USB bus), PCNT in USBHS_DOEPxLEN register is decreased by 1 and the ACK flag is triggered, otherwise, the status flags report the transaction result.
4. After all the data packets in a transfer are successful received on USB bus, USBHS push a TF status entry into the Rx FIFO on top of the last packet data. After software reads and pops all the received data packet, and at last, the TF status entry, USBHS generates TF flag to indicate that the transfer successfully finishes and disable the OUT endpoint.

OUT transfers operation sequence with DMA enabled

1. Initialize USBHS global registers.
2. Initialize and enable the OUT endpoint.
3. When an OUT token received, USBHS receive the data packet or response with an NAK handshake based on the status of Rx FIFO and register configuration. If the transaction finishes successfully (USBHS receives and saves the data packet into Rx FIFO successfully and sends ACK handshake on USB bus), PCNT in USBHS_DOEPxLEN register is decreased by 1 and the ACK flag is triggered, otherwise, the status flags report the transaction result.
4. If all the transactions are successful received on USB bus, USBHS generates TF and EPDIS flags to indicate that the transfer successfully finishes and the endpoint is disabled. If USB bus error or DMA write error occurs during these transactions, DMA will trigger related error flags.

Note: In DMA mode, software should not enable or process the RXFNEIF interrupt because the DMA will automatically process the Rx FIFO.

49.6. Interrupts

USBHS has four interrupts: global interrupt, wake-up interrupt, endpoint1 IN interrupt and endpoint1 OUT interrupt.

Global interrupt is the main interrupt software should process, the source flags of the global

interrupt are readable in USBHS_GINTF register and listed in the following *Table 49-3. USBHS global interrupt*.

Table 49-3. USBHS global interrupt

Interrupt Flag	Description	Operation Mode
SEIF	Session interrupt	Host or device mode
DISCIF	Disconnect interrupt flag	Host Mode
IDPSC	ID pin status change	Host or device mode
LPMIF	LPM interrupt flag	Host or device mode
PTXFEIF	Periodic Tx FIFO empty interrupt flag	Host Mode
HCIF	Host channels interrupt flag	Host Mode
HPIF	Host port interrupt flag	Host Mode
ISOONCIF/PXNCIF	Periodic transfer Not Complete Interrupt flag / Isochronous OUT transfer Not Complete Interrupt Flag	Host or device mode
ISOINCIF	Isochronous IN transfer Not Complete Interrupt Flag	Device mode
OEPIF	OUT endpoint interrupt flag	Device mode
IEPIF	IN endpoint interrupt flag	Device mode
EOPFIF	End of periodic frame interrupt flag	Device mode
ISOOPDIF	Isochronous OUT packet dropped interrupt flag	Device mode
ENUMF	Enumeration finished	Device mode
RST	USB reset	Device mode
SP	USB suspend	Device mode
ESP	Early suspend	Device mode
GONAK	Global OUT NAK effective	Device mode
GNPINAK	Global IN Non-Periodic NAK effective	Device mode
NPTXFEIF	Non-Periodic Tx FIFO empty interrupt flag	Host Mode
RXFNEIF	Rx FIFO non-empty interrupt flag	Host or device mode
SOF	Start of frame	Host or device mode
OTGIF	OTG interrupt flag	Host or device mode
MFIF	Mode fault interrupt flag	Host or device mode

Wake up interrupt is able to be triggered when USBHS is in suspend state, even when the USBHS's clocks are stopped. The source of the wake up interrupt is WKUPIF bit in USBHS_GINTF register.

Endpoint 1 IN/OUT interrupts are two special interrupts for endpoint 1. Application can use these two interrupts to make a quick response to the events on endpoint 1. The two interrupts are individually enabled by USBHS_DEP1INT register. And the source of these two interrupts also come from USBHS_DIEP1INTF and USBHS_DOEP1INTF registers, but the enable bits for these flags to generate Endpoint 1 IN/OUT interrupts are in USBHS_DIEP1INTEN and

USBHS_DOEP1INTEN registers.

49.7. Register definition

USBHS0 base address: 0x4004 0000

USBHS1 base address: 0x4008 0000

49.7.1. USBHS global registers

Global OTG control and status register (USBHS_GOTGCS)

Address offset: 0x0000

Reset value: 0x0000 0800

This register has to be accessed by word (32-bit)

31	30	29	28	27	26	25	24	23	22	21	20	19	18	17	16
Reserved											OV	BSV	ASV	DI	IDPS
											rw	r	r	r	r

15	14	13	12	11	10	9	8	7	6	5	4	3	2	1	0
Reserved			EHE	DHNPEN	HHNPEN	HNPREQ	HNPS	BVOV	BVOE	AVOV	AVOE	VOV	VOE	SRPREQ	SRPS
			rw	rw	rw	rw	r	rw	rw	rw	rw	rw	rw	rw	r

Bits	Fields	Descriptions
31:21	Reserved	Must be kept at reset value.
20	OV	Select OTG version 0: Version 1.3 is selected. Data line pulsing and VBUS pulsing are supported in SRP 1: Version 2.0 is selected. Only data line pulsing is supported in SRP
19	BSV	B-Session Valid (described in OTG protocol). 0: Vbus voltage level of a OTG B-device is below VBSESSVLD 1: Vbus voltage level of a OTG B-Device is not below VBSESSVLD **Note:** Only accessible in OTG B-Device mode.
18	ASV	A-session valid A-host mode transceiver status. 0: Vbus voltage level of a OTG A-device is below VASESSVLD 1: Vbus voltage level of a OTG A-device is not below VASESSVLD The A-device is as host default at the start of a session. **Note:** Only accessible in OTG A-Device mode.

17	DI	Debounce interval Debounce interval of a detected connection. 0: Indicates the long debounce interval, when a plug-on and connection occur on USB bus 1: Indicates the short debounce interval, when a soft connection is used in HNP protocol. **Note:** Only accessible in host mode.
16	IDPS	ID pin status Voltage level of connector ID pin 0: USBHS is in A-device mode 1: USBHS is in B-device mode **Note:** Accessible in both device and host modes.
15:13	Reserved	Must be kept at reset value
12	EHE	Embedded host enable 0: OTG A-device state is selected 1: Embedded host state is selected
11	DHNPEN	Device HNP enable Enable the HNP function of a B-device. If this bit is cleared, USBHS doesn't start HNP protocol when application set HNPREQ bit in USBHS_GOTGCS register. 0: HNP function is not enabled. 1: HNP function is enabled **Note:** Only accessible in device mode.
10	HHNPEN	Host HNP enable Enable the HNP function of an A-device. If this bit is cleared, USBHS doesn't response to the HNP request from B-device. 0: HNP function is not enabled. 1: HNP function is enabled **Note:** Only accessible in host mode.
9	HNPREQ	HNP request This bit is set by software to start a HNP on the USB. Software can clear this bit when HNPEND bit in USBHS_GOTGINTF register is set, by writing zero to it, or clearing the HNPEND bit in USBHS_GOTGINTF register. 0: Don't send HNP request 1: Send HNP request **Note:** Only accessible in device mode.
8	HNPS	HNP successes This bit is set by the core when HNP successes and cleared when HNPREQ bit is set. 0: HNP fails 1: HNP successes

		Note: Only accessible in device mode.
7	BVOV	Override value of B-peripheral session valid 0: B-peripheral session valid value is 0 when BVOE = 1 1: B-peripheral session valid value is 1 when BVOE = 1 **Note:** Only accessible in device mode.
6	BVOE	Override enable of B-peripheral session valid 0: Override is disable. Internally B-peripheral session valid received from PHY is selected 1: Override is enable. Internally B-peripheral session valid received from PHY is overridden with BVOV **Note:** Only accessible in device mode.
5	AVOV	Override value of A-peripheral session valid 0: A-peripheral session valid value is 0 when AVOE = 1 1: A-peripheral session valid value is 1 when AVOE = 1 **Note:** Only accessible in host mode.
4	AVOE	Override enable of A-peripheral session valid 0: Override is disable. Internally A-peripheral session valid received from PHY is selected 1: Override is enable. Internally A-peripheral session valid received from PHY is overridden with AVOV **Note:** Only accessible in host mode.
3	VOV	Override value of VBUS valid 0: VBUS valid value is 0 when VOE = 1 1: VBUS valid value is 1 when VOE = 1 **Note:** Only accessible in host mode.
2	VOE	Override enable of VBUS valid 0: Override is disable. Internally VBUS valid received from PHY is selected 1: Override is enable. Internally VBUS valid received from PHY is overridden with VOV **Note:** Only accessible in host mode.
1	SRPREQ	SRP request This bit is set by software to start a SRP on the USB. Software can clear this bit when SRPEND bit in USBHS_GOTGINTF register is set, by writing zero to it, or clearing the SRPEND bit in USBHS_GOTGINTF register. 0: No session request 1: Session request **Note:** Only accessible in device mode.
0	SRPS	SRP success This bit is set by the core when SRP successes and cleared when SRPREQ bit is set.

0: SRP fails

1: SRP successes

Note: Only accessible in device mode.

Global OTG interrupt flag register (USBHS_GOTGINTF)

Address offset: 0x0004

Reset value: 0x0000 0000

This register has to be accessed by word (32-bit)

31	30	29	28	27	26	25	24	23	22	21	20	19	18	17	16
Reserved											IDCHG	DF	ADTO	HNPDET	Reserved
											rc_w1	rc_w1	rc_w1	rc_w1	

15	14	13	12	11	10	9	8	7	6	5	4	3	2	1	0
Reserved						HNPEND	SRPEND	Reserved					SESEND	Reserved	
						rc_w1	rc_w1						rc_w1		

Bits	Fields	Descriptions
31:21	Reserved	Must be kept at reset value.
20	IDCHG	There is a change in the value of ID input
19	DF	Debounce finish Set by USBHS when the debounce during device connection is done. **Note:** Only accessible in host mode.
18	ADTO	A-device timeout Set by USBHS when the A-device's waiting for a B-device' connection has timed out. **Note:** Accessible in both device and host modes.
17	HNPDET	Host negotiation request detected Set by USBHS when A-device detects a HNP request. **Note:** Accessible in both device and host modes.
16:10	Reserved	Must be kept at reset value.
9	HNPEND	HNP end Set by the core when a HNP ends. Software should read the HNPS in USBHS_GOTGCS register to get the result of HNP. **Note:** Accessible in both device and host modes.

8	SRPEND	SRPEND Set by the core when a SRP ends. Software should read the SRPS in USBHS_GOTGCS register to get the result of SRP. **Note:** Accessible in both device and host modes.
7:3	Reserved	Must be kept at reset value.
2	SESEND	Session end Set by the core when VBUS voltage is below Vb_ses_vld.
1:0	Reserved	Must be kept at reset value.

Global AHB control and status register (USBHS_GAHBCS)

Address offset: 0x0008

Reset value: 0x0000 0000

This register has to be accessed by word (32-bit)

31	30	29	28	27	26	25	24	23	22	21	20	19	18	17	16
Reserved															

15	14	13	12	11	10	9	8	7	6	5	4	3	2	1	0
Reserved							PTXFTH	TXFTH	Reserved	DMAEN	BURST[3:0]				GINTEN
							rw	rw		rw	rw				rw

Bits	Fields	Descriptions
31:9	Reserved	Must be kept at reset value.
8	PTXFTH	Periodic Tx FIFO threshold 0: PTXFEIF will be triggered when the periodic transmit FIFO is half empty 1: PTXFEIF will be triggered when the periodic transmit FIFO is completely empty **Note:** Only accessible in host mode.
7	TXFTH	Tx FIFO threshold **Device mode:** 0: TXFEIF will be triggered when the IN endpoint transmit FIFO is half empty 1: TXFEIF will be triggered when the IN endpoint transmit FIFO is completely empty **Host mode:** 0: NPTXFEIF will be triggered when the non-periodic transmit FIFO is half empty 1: NPTXFEIF will be triggered when the non-periodic transmit FIFO is completely empty

6	Reserved	Must be kept at reset value.
5	DMAEN	DMA function Enable 0: DMA function is disabled 1: DMA function is enabled
4:1	BURST[3:0]	The AHB burst type used by DMA 0000: Single 0001: INCR 0011: INCR4 0101: INCR8 0111: INCR16
0	GINTEN	Global interrupt enable 0: Global interrupt is not enabled. 1: Global interrupt is enabled. **Note:** Accessible in both device and host modes.

Global USB control and status register (USBHS_GUSBCS)

Address offset: 0x000C

Reset value: 0x0000 1400

This register has to be accessed by word (32-bit)

31	30	29	28	27	26	25	24	23	22	21	20	19	18	17	16
Reserved.	FDM	FHM	Reserved							ULPIEOI	ULPIEVD	Reserved			
	rw	rw								rw	rw				

15	14	13	12	11	10	9	8	7	6	5	4	3	2	1	0
Reserved		UTT[3:0]				HNPCEN	SRPCEN	Reserved	EMBPHY_FS	EMBPHY_HS	HS_CUR_FE	Reserved	TOC[2:0]		
		rw				r/rw	r/rw		rw	rw	rw		rw		

Bits	Fields	Descriptions
31	Reserved	Must be kept at reset value.
30	FDM	Force device mode Setting this bit will force the core to device mode irrespective of the USBHS ID input pin. 0: Normal mode 1: Device mode The application must wait at least 25 ms for the change taking effect after setting the force bit.

		Note: Accessible in both device and host modes.
29	FHM	Force host mode Setting this bit will force the core to host mode irrespective of the USBHS ID input pin. 0: Normal mode 1: Host mode The application must wait at least 25 ms for the change taking effect after setting the force bit. **Note:** Accessible in both device and host modes.
28:22	Reserved	Must be kept at reset value.
21	ULPIEOI	ULPI external over-current indicator ULPI PHY uses this bit to decide whether to use internal or external over-current indicator. This bit only takes effect when external ULPI PHY is used (EMBPHY_FS and EMBPHY_HS bits in this register are both 0). 0: ULPI PHY uses internal over-current indicator 1: ULPI PHY uses external over-current indicator
20	ULPIEVD	ULPI external VBUS driver ULPI PHY uses this bit to decide whether VBUS is driven by ULPI PHY or by external power supply. This bit only takes effect when external ULPI PHY is used (EMBPHY_FS and EMBPHY_HS bits in this register are both 0). 0: VBUS is driven by ULPI PHY 1: VBUS is driven by external power supply
19:14	Reserved	Must be kept at reset value.
13:10	UTT[3:0]	USB turnaround time Turnaround time in PHY clocks. **Note:** Only accessible in device mode.
9	HNPCEN	HNP capability enable Controls whether the HNP capability is enabled 0: HNP capability is disabled 1: HNP capability is enabled **Note:** Accessible in both device and host modes.
8	SRPCEN	SRP capability enable Controls whether the SRP capability is enabled 0: SRP capability is disabled 1: SRP capability is enabled **Note:** Accessible in both device and host modes.
7	Reserved	Must be kept at reset value.
6	EMBPHY_FS	Embedded FS PHY selected 0: Embedded FS PHY is disabled

		1: Embedded FS PHY is enabled **Note:** This bit can only be set when EMBPHY_HS is set to 0. Accessible in both device and host modes.
5	EMBPHY_HS	Embedded HS PHY selected 0: Embedded HS PHY is disabled 1: Embedded HS PHY is enabled **Note:** This bit can only be set when EMBPHY_FS is set to 0. Accessible in both device and host modes.
4	HS_CUR_FE	HS current software enable 0: Release the HS mode TX current enable 1: Force HS mode TX current enable
3	Reserved	Must be kept at reset value.
2:0	TOC[2:0]	Timeout calibration USBHS always uses time-out value required in USB 2.0 when waiting for a packet. Application may use TOC[2:0] to add the value is in terms of PHY clock. (The frequency of PHY clock is decided by which PHY is used: 48MHZ with internal embedded PHY and 60MHz with external ULPI PHY.)

Global reset control register (USBHS_GRSTCTL)

Address offset: 0x0010

Reset value: 0x8000 0000

The application uses this register to reset various hardware features inside the core.

This register has to be accessed by word (32-bit)

31	30	29	28	27	26	25	24	23	22	21	20	19	18	17	16
DMAIDL	DMABSY	Reserved													
r	r														

15	14	13	12	11	10	9	8	7	6	5	4	3	2	1	0
Reserved					TXFNUM[4:0]					TXFF	RXFF	Reserved.	HFCRST	HCSRST	CSRST
							rw			rs	rs		rs	rs	rs

Bits	Fields	Descriptions
31	DMAIDL	DMA Idle state This bit reports that whether DMA is in IDLE state or not. 0: DMA is not IDLE

		1: DMA is IDLE **Note:** Accessible in both device and host modes.
30	DMABSY	DMA Busy This bit reports that whether DMA is busy. 0: DMA is not busy 1: DMA is busy **Note:** Accessible in both device and host modes.
29:11	Reserved	Must be kept at reset value.
10:6	TXFNUM[4:0]	Tx FIFO number Indicates which Tx FIFO will be flushed when TXFF bit in the same register is set. Host Mode: 00000: Only non-periodic Tx FIFO is flushed 00001: Only periodic Tx FIFO is flushed 1XXXX: Both periodic and non-periodic Tx FIFOs are flushed Other: Non data FIFO is flushed Device Mode: 00000: Only Tx FIFO0 is flushed 00001: Only Tx FIFO1 is flushed … 00111: Only Tx FIFO7 is flushed 1XXXX: All Tx FIFOs are flushed Other: Non data FIFO is flushed
5	TXFF	Tx FIFO flush Application sets this bit to flush data Tx FIFOs and TXFNUM[4:0] bits decide the FIFO number to be flushed. Hardware automatically clears this bit after the flush process completes. After setting this bit, application should wait until this bit is cleared before any other operation on USBHS. **Note:** Accessible in both device and host modes.
4	RXFF	Rx FIFO flush Application sets this bit to flush data Rx FIFO. Hardware automatically clears this bit after the flush process completes. After setting this bit, application should wait until this bit is cleared before any other operation on USBHS. **Note:** Accessible in both device and host modes.
3	Reserved	Must be kept at reset value.
2	HFCRST	Host frame counter reset Set by the application to reset the frame number counter in USBHS. After this bit is set, the frame number of the following SOF returns to 0. Hardware automatically clears this bit after the reset process completes. After setting this bit, application should wait until this bit is cleared before any other operation on USBHS. **Note:** Only accessible in host mode.

1	HCSRST	HCLK soft reset Set by the application to reset AHB clock domain circuit. Hardware automatically clears this bit after the reset process completes. After setting this bit, application should wait until this bit is cleared before any other operation on USBHS. **Note:** Accessible in both device and host modes.
0	CSRST	Core soft reset Resets the AHB and USB clock domains circuits, as well as most of the registers.

Global interrupt flag register (USBHS_GINTF)

Address offset: 0x0014

Reset value: 0x0400 0021

This register has to be accessed by word (32-bit)

31	30	29	28	27	26	25	24	23	22	21	20	19	18	17	16
WKUPIF	SESIF	DISCIF	IDPSC	LPMIF	PTXFEIF	HCIF	HPIF	Reserved		PXNCIF/ ISOONCIF	ISOINCIF	OEPIF	IEPIF	Reserved	
rc_w1	rc_w1	rc_w1	rc_w1	rc_w1	r	r	r			rc_w1	rc_w1	r	r		

15	14	13	12	11	10	9	8	7	6	5	4	3	2	1	0
EOPFIF	ISOOPDIF	ENUMF	RST	SP	ESP	Reserved		GONAK	GNPINAK	NPTXFEIF	RXFNEIF	SOF	OTGIF	MFIF	COPM
rc_w1	rc_w1	rc_w1	rc_w1	rc_w1	rc_w1			r	r	r	r	rc_w1	r	rc_w1	r

Bits	Fields	Descriptions
31	WKUPIF	Wakeup interrupt flag This interrupt is triggered when a resume signal (in device mode) or a remote wakeup signal (in host mode) is detected on the USB. **Note:** Accessible in both device and host modes.
30	SESIF	Session interrupt flag This interrupt is triggered when a SRP is detected (in A-Device mode) or V_{BUS} becomes valid for a B- device (in B-Device mode). **Note:** Accessible in both device and host modes.
29	DISCIF	Disconnect interrupt flag This interrupt is triggered after a device disconnection. **Note:** Only accessible in host mode.
28	IDPSC	ID pin status change Set by the core when ID status changes.

		Note: Accessible in both device and host modes.
27	LPMIF	LPM interrupt flag In host mode, when device responds to LPM transaction with ACK, NYET or STALL, or when host has sent RECNT (USBHS_LPMCFG register) times LPM transaction, the interrupt is triggered. In device mode, when device has received LPM transaction and responds with ACK, NYET or STALL, the interrupt is triggered.
26	PTXFEIF	Periodic Tx FIFO empty interrupt flag This interrupt is triggered when the periodic transmit FIFO is either half or completely empty. The threshold is determined by the periodic Tx FIFO empty level bit (PTXFTH) in the USBHS_GAHBCS register. **Note:** Only accessible in host mode.
25	HCIF	Host channels interrupt flag Set by USBHS when one of the channels in host mode has raised an interrupt. Software should first read USBHS_HACHINT register to get the channel number, and then read the corresponding USBHS_HCHxINTF register to get the flags of the channel that cause the interrupt. This bit will be automatically cleared after the respective channel's flags which cause channel interrupt are cleared. **Note:** Only accessible in host mode.
24	HPIF	Host port interrupt flag Set by the core when USBHS detects that port status changes in host mode. Software should read USBHS_HPCS register to get the source of this interrupt. This bit will be automatically cleared after the flags that causing a port interrupt are cleared. **Note:** Only accessible in host mode.
23:22	Reserved	Must be kept at reset value.
21	PXNCIF	Periodic transfer Not Complete Interrupt flag USBHS sets this bit when there are periodic transactions for current frame not completed at the end of frame. (Host mode)
	ISOONCIF	Isochronous OUT transfer Not Complete Interrupt Flag At the end of a periodic frame (defined by EOPFT bit in USBHS_DCFG), USBHS will set this bit if there are still isochronous OUT endpoints that not completed transactions. (Device Mode)
20	ISOINCIF	Isochronous IN transfer Not Complete Interrupt Flag At the end of a periodic frame (defined by EOPFT[1:0] bits in USBHS_DCFG), USBHS will set this bit if there are still isochronous IN endpoints that not completed transactions. (Device Mode) **Note:** Only accessible in device mode.
19	OEPIF	OUT endpoint interrupt flag Set by USBHS when one of the OUT endpoints in device mode has raised an

		interrupt. Software should first read USBHS_DAEPINT register to get the device number, and then read the corresponding USBHS_DOEPxINTF register to get the flags of the endpoint that cause the interrupt. This bit will be automatically cleared after the respective endpoint's flags which cause this interrupt are cleared. **Note:** Only accessible in device mode.
18	IEPIF	IN endpoint interrupt flag Set by USBHS when one of the IN endpoints in device mode has raised an interrupt. Software should first read USBHS_DAEPINT register to get the device number, and then read the corresponding USBHS_DIEPxINTF register to get the flags of the endpoint that cause the interrupt. This bit will be automatically cleared after the respective endpoint's flags which cause this interrupt are cleared. **Note:** Only accessible in device mode.
17:16	Reserved	Must be kept at reset value.
15	EOPFIF	End of periodic frame interrupt flag When USB bus time in a frame has reaches the value defined by EOPFT[1:0] bits in USBHS_DCFG register, USBHS sets this flag. **Note:** Only accessible in device mode.
14	ISOOPDIF	Isochronous OUT packet dropped interrupt flag USBHS set this bit if it receives an isochronous OUT packet but cannot save it into Rx FIFO because the FIFO doesn't have enough space. **Note:** Only accessible in device mode.
13	ENUMF	Enumeration finished USBHS sets this bit after the speed enumeration finishes. Software is able to read USBHS_DSTAT register to get the current device speed. **Note:** Only accessible in device mode.
12	RST	USB reset USBHS sets this bit when it detects a USB reset signal on bus. **Note:** Only accessible in device mode.
11	SP	USB suspend USBHS sets this bit when it detects that the USB bus is idle for 3 ms and enters suspend state. **Note:** Only accessible in device mode.
10	ESP	Early suspend USBHS sets this bit when it detects that the USB bus is idle for 3 ms. **Note:** Only accessible in device mode.
9:8	Reserved	Must be kept at reset value.
7	GONAK	Global OUT NAK effective Software is able to write 1 to SGONAK bit in the USBHS_DCTL register and USBHS will set GONAK flag after writing to SGONAK takes effect. And this bit can be

		cleared by writting 1 to CGONAK bit in the USBHS_DCTL register. **Note:** Only accessible in device mode.
6	GNPINAK	Global IN Non-Periodic NAK effective Software is able to write 1 to SGINAK bit in the USBHS_DCTL register and USBHS will set GNPINAK flag after writing to SGINAK takes effect. And this bit can be cleared by writting 1 to CGINAK bit in the USBHS_DCTL register. **Note:** Only accessible in device mode.
5	NPTXFEIF	Non-Periodic Tx FIFO empty interrupt flag This interrupt is triggered when the non-periodic transmit FIFO is either half or completely empty. The threshold is determined by the non-periodic Tx FIFO empty level bit (TXFTH) in the USBHS_GAHBCS register. **Note:** Only accessible in host mode.
4	RXFNEIF	Rx FIFO non-empty interrupt flag USBHS sets this bit when there is at least one packet or status entry in the Rx FIFO. **Note:** Accessible in both host and device modes.
3	SOF	Start of frame Host Mode: USBHS sets this bit when it prepares to transmit a SOF or Keep-Alive on USB bus. Software can clear this bit by writing 1. Device Mode: USBHS sets this bit to after it receives a SOF token. The application can read the Device Status register to get the current frame number. Software can clear this bit by writing 1. **Note:** Accessible in both host and device modes.
2	OTGIF	OTG interrupt flag USBHS sets this bit when the flags in USBHS_GOTGINTF register generate a interrupt. Software should read USBHS_GOTGINTF register to get the source of this interrupt. This bit is cleared after the flags in USBHS_GOTGINTF causing this interrupt are cleared. **Note:** Accessible in both host and device modes.
1	MFIF	Mode fault interrupt flag USBHS sets this bit if software operates host-only register in device mode, or operates device-mode in host mode. These fault operations won't take effect. **Note:** Accessible in both host and device modes.
0	COPM	Current operation mode 0: Device mode 1: Host mode **Note:** Accessible in both host and device modes.

Global interrupt enable register (USBHS_GINTEN)

Address offset: 0x0018

Reset value: 0x0000 0000

This register works with the global interrupt flag register (USBHS_GINTF) to interrupt the application. When an interrupt enable bit is disabled, the interrupt associated with that bit is not generated. However, the global Interrupt flag register bit corresponding to that interrupt is still set.

This register has to be accessed by word (32-bit)

31	30	29	28	27	26	25	24	23	22	21	20	19	18	17	16
WKUPIE	SESIE	DISCIE	IDPSCIE	LPMIE	PTXFEIE	HCIE	HPIE	Reserved		PXNCIE/ ISOONCIE	ISOINCIE	OEPIE	IEPIE	Reserved	
rw	rw	rw	rw	rw	rw	rw	r			rw	rw	rw	rw		

15	14	13	12	11	10	9	8	7	6	5	4	3	2	1	0
EOPFIE	ISOOPDIE	ENUMFIE	RSTIE	SPIE	ESPIE	Reserved		GONAKIE	GNPINAKIE	NPTXFEIE	RXFNEIE	SOFIE	OTGIE	MFIE	Reserved
rw	rw	rw	rw	rw	rw			rw	rw	rw	rw	rw	rw	rw	

Bits	Fields	Descriptions
31	WKUPIE	Wakeup interrupt enable 0: Disable wakeup interrupt 1: Enable wakeup interrupt **Note:** Accessible in both host and device modes.
30	SESIE	Session interrupt enable 0: Disable session interrupt 1: Enable session interrupt **Note:** Accessible in both host and device modes.
29	DISCIE	Disconnect interrupt enable 0: Disable disconnect interrupt 1: Enable disconnect interrupt **Note:** Only accessible in device mode.
28	IDPSCIE	ID pin status change interrupt enable 0: Disable connector ID pin status interrupt 1: Enable connector ID pin status interrupt **Note:** Accessible in both host and device modes.
27	LPMIE	LPM interrupt enable 0: disable LPM interrupt 1: enable LPM interrupt **Note:** Accessible in both host and device modes.
26	PTXFEIE	Periodic Tx FIFO empty interrupt enable

		0: Disable periodic Tx FIFO empty interrupt 1: Enable periodic Tx FIFO empty interrupt **Note:** Only accessible in host mode.
25	HCIE	Host channels interrupt enable 0: Disable host channels interrupt 1: Enable host channels interrupt **Note:** Only accessible in host mode.
24	HPIE	Host port interrupt enable 0: Disable host port interrupt 1: Enable host port interrupt **Note:** Only accessible in host mode.
23:22	Reserved	Must be kept at reset value.
21	PXNCIE	Periodic transfer not complete interrupt enable 0: Disable Periodic transfer not complete interrupt 1: Enable Periodic transfer not complete interrupt **Note:** Only accessible in host mode.
	ISOONCIE	Isochronous OUT transfer not complete interrupt enable 0: Disable Isochronous OUT transfer not complete interrupt 1: Enable Isochronous OUT transfer not complete interrupt **Note:** Only accessible in device mode.
20	ISOINCIE	Isochronous IN transfer not complete interrupt enable 0: Disable Isochronous IN transfer not complete interrupt 1: Enable Isochronous IN transfer not complete interrupt **Note:** Only accessible in device mode.
19	OEPIE	OUT endpoints interrupt enable 0: Disable OUT endpoints interrupt 1: Enable OUT endpoints interrupt **Note:** Only accessible in device mode.
18	IEPIE	IN endpoints interrupt enable 0: Disable IN endpoints interrupt 1: Enable IN endpoints interrupt **Note:** Only accessible in device mode.
17:16	Reserved	Must be kept at reset value.
15	EOPFIE	End of periodic frame interrupt enable 0: Disable end of periodic frame interrupt 1: Enable end of periodic frame interrupt **Note:** Only accessible in device mode.
14	ISOOPDIE	Isochronous OUT packet dropped interrupt enable 0: Disable isochronous OUT packet dropped interrupt

		1: Enable isochronous OUT packet dropped interrupt **Note:** Only accessible in device mode.
13	ENUMFIE	Enumeration finish enable 0: Disable enumeration finish interrupt 1: Enable enumeration finish interrupt **Note:** Only accessible in device mode.
12	RSTIE	USB reset interrupt enable 0: Disable USB reset interrupt 1: Enable USB reset interrupt **Note:** Only accessible in device mode.
11	SPIE	USB suspend interrupt enable 0: Disable USB suspend interrupt 1: Enable USB suspend interrupt **Note:** Only accessible in device mode.
10	ESPIE	Early suspend interrupt enable 0: Disable early suspend interrupt 1: Enable early suspend interrupt **Note:** Only accessible in device mode.
9:8	Reserved	Must be kept at reset value.
7	GONAKIE	Global OUT NAK effective interrupt enable 0: Disable global OUT NAK interrupt 1: Enable global OUT NAK interrupt **Note:** Only accessible in device mode.
6	GNPINAKIE	Global non-periodic IN NAK effective interrupt enable 0: Disable global non-periodic IN NAK effective interrupt 1: Enable global non-periodic IN NAK effective interrupt **Note:** Only accessible in device mode.
5	NPTXFEIE	Non-periodic Tx FIFO empty interrupt enable 0: Disable non-periodic Tx FIFO empty interrupt 1: Enable non-periodic Tx FIFO empty interrupt **Note:** Only accessible in Host mode.
4	RXFNEIE	Receive FIFO non-empty interrupt enable 0: Disable receive FIFO non-empty interrupt 1: Enable receive FIFO non-empty interrupt **Note:** Accessible in both device and host modes.
3	SOFIE	Start of frame interrupt enable 0: Disable start of frame interrupt 1: Enable start of frame interrupt

		Note: Accessible in both device and host modes.
2	OTGIE	OTG interrupt enable 0: Disable OTG interrupt 1: Enable OTG interrupt **Note:** Accessible in both device and host modes.
1	MFIE	Mode fault interrupt enable 0: Disable mode fault interrupt 1: Enable mode fault interrupt **Note:** Accessible in both device and host modes.
0	Reserved	Must be kept at reset value.

Global receive status read/receive status read and pop registers (USBHS_GRSTATR/USBHS_GRSTATP)

Address offset for Read: 0x001C
Address offset for Pop: 0x0020
Reset value: 0x0000 0000

A read to the receive status read register returns the entry of the top of the Rx FIFO. A read to the Receive status read and pop register additionally pops the top entry out of the Rx FIFO.

The entries in RxFIFO have different meanings in host and device modes. Software should only read this register after when Receive FIFO non-empty interrupt flag bit of the global interrupt flag register (RXFNEIF bit in USBHS_GINTF) is triggered.

This register has to be accessed by word (32-bit)

Host mode:

31	30	29	28	27	26	25	24	23	22	21	20	19	18	17	16
Reserved											RPCKST[3:0]				DPID[1]
												r			r

15	14	13	12	11	10	9	8	7	6	5	4	3	2	1	0
DPID[0]	BCOUNT[10:0]											CNUM[3:0]			
r	r											r			

Bits	Fields	Descriptions

31:21	Reserved	Must be kept at reset value.
20:17	RPCKST[3:0]	Received packet status 0010: IN data packet received 0011: IN transfer completed (generates an interrupt if poped) 0101: Data toggle error (generates an interrupt if poped) 0111: Channel halted (generates an interrupt if poped) Others: Reserved
16:15	DPID[1:0]	Data PID The Data PID of the received packet 00: DATA0 10: DATA1 01: DATA2 11: MDATA
14:4	BCOUNT[10:0]	Byte count The byte count of the received IN data packet.
3:0	CNUM[3:0]	Channel number The channel number to which the current received packet belongs.

Device mode:

31	30	29	28	27	26	25	24	23	22	21	20	19	18	17	16
Reserved											RPCKST[3:0]				DPID[1]
												r			r

15	14	13	12	11	10	9	8	7	6	5	4	3	2	1	0
DPID[0]	BCOUNT[10:0]											EPNUM[3:0]			
r	r											r			

Bits	Fields	Descriptions
31:21	Reserved	Must be kept at reset value.
20:17	RPCKST[3:0]	Received packet status 0001: Global OUT NAK (generates an interrupt) 0010: OUT data packet received 0011: OUT transfer completed (generates an interrupt) 0100: SETUP transaction completed (generates an interrupt) 0110: SETUP data packet received Others: Reserved

16:15	DPID[1:0]	Data PID The Data PID of the received OUT data packet 00: DATA0 10: DATA1 01: DATA2 11: MDATA
14:4	BCOUNT[10:0]	Byte count The byte count of the received data packet.
3:0	EPNUM[3:0]	Endpoint number The endpoint number to which the current received packet belongs.

Global receive FIFO length register (USBHS_GRFLEN)

Address offset: 0x024

Reset value: 0x0000 0200

This register has to be accessed by word (32-bit)

31	30	29	28	27	26	25	24	23	22	21	20	19	18	17	16
Reserved															

15	14	13	12	11	10	9	8	7	6	5	4	3	2	1	0
RXFD[15:0]															
r/rw															

Bits	Fields	Descriptions
31:16	Reserved	Must be kept at reset value.
15:0	RXFD[15:0]	Rx FIFO depth In terms of 32-bit word. 1≤RXFD≤1024

Host non-periodic transmit FIFO length register /Device IN endpoint 0 transmit FIFO length (USBHS_HNPTFLEN/USBHS_DIEP0TFLEN)

Address offset: 0x028

Reset value: 0x0200 0200

This register has to be accessed by word (32-bit)

31	30	29	28	27	26	25	24	23	22	21	20	19	18	17	16

							IEP0TXFD[15:0]	HNPTXFD/							
							r/rw								
15	14	13	12	11	10	9	8	7	6	5	4	3	2	1	0
							[15:0]	IEP0TXRSAR	HNPTXRSAR/						
							r/rw								

Host Mode:

Bits	Fields	Descriptions
31:16	HNPTXFD[15:0]	Non-periodic Tx FIFO depth In terms of 32-bit word. 1≤HNPTXFD≤1024
15:0	HNPTXRSAR[15:0]	Non-periodic Tx RAM start address The start address for non-periodic transmit FIFO RAM in terms of 32-bit word.

Device Mode:

Bits	Fields	Descriptions
31:16	IEP0TXFD[15:0]	IN Endpoint 0 Tx FIFO depth In terms of 32-bit words. 16≤IEP0TXFD≤140
15:0	IEP0TXRSAR[15:0]	IN Endpoint 0 TX RAM start address The start address for endpoint0 transmit FIFO RAM in terms of 32-bit word.

Host non-periodic transmit FIFO/queue status register (USBHS_HNPTFQSTAT)

Address offset: 0x002C
Reset value: 0x0008 0200

This register has to be accessed by word (32-bit)

This register reports the current status of the non-periodic Tx FIFO and request queue. The request queue holds IN, OUT or other request entries in host mode.
Note: In Device mode, this register is not valid.

31	30	29	28	27	26	25	24	23	22	21	20	19	18	17	16
Reserved				NPTXRQTOP[6:0]							NPTXRQS[7:0]				
				r							r				

15	14	13	12	11	10	9	8	7	6	5	4	3	2	1	0
							NPTXFS[15:0]								
							r								

Bits	Fields	Descriptions
31	Reserved	Must be kept at reset value.
30:24	NPTXRQTOP[6:0]	Top entry of the non-periodic Tx request queue Entry in the non-periodic transmit request queue. Bits 30:27: Channel number Bits 26:25: – 00: IN/OUT token – 01: Zero-length OUT packet – 11: Channel halt request Bit 24: Terminate Flag, indicating last entry for selected channel.
23:16	NPTXRQS[7:0]	Non-periodic Tx request queue space The remaining space of the non-periodic transmit request queue. 0: Request queue is Full 1: 1 entry 2: 2 entries … n: n entries (0≤n≤8) Others: Reserved
15:0	NPTXFS[15:0]	Non-periodic Tx FIFO space The remaining space of the non-periodic transmit FIFO. In terms of 32-bit words. 0: Non-periodic Tx FIFO is full 1: 1 words 2: 2 words … n: n words (0≤n≤NPTXFD) Others: Reserved

Global core configuration register (USBHS_GCCFG)

Address offset: 0x0038

Reset value: 0x0000 0000

This register has to be accessed by word (32-bit)

31	30	29	28	27	26	25	24	23	22	21	20	19	18	17	16

Reserved	VDEN	SOFOEN	Reserved	PWRON
	rw	rw		rw

15	14	13	12	11	10	9	8	7	6	5	4	3	2	1	0
SDMEN	PDMEN	DCDMEN	BCDEN	Reserved								PS2F	SDF	PDF	DCDF
rw	rw	rw	rw									r	r	r	r

Bits	Fields	Descriptions
31:22	Reserved	Must be kept at reset value.
21	VDEN	Enable of VBUS sensing comparator to detect VBUS valid. VBUS comparator is enabled automatically if HNP or SRP is supported. 0: VBUS detection is disabled 1: VBUS detection is enabled
20	SOFOEN	SOF output enable 0: SOF pulse output disabled. 1: SOF pulse output enabled.
19:17	Reserved	Must be kept at reset value.
16	PWRON	Power on This bit is the power switch for the internal embedded PHY. 0: Embedded PHY power off. 1: Embedded PHY power on.
15	SDMEN	Secondary detection mode enable 0: Secondary detection disable 1: Secondary detection enable
14	PDMEN	Primary detection mode enable 0: Primary detection disable 1: Primary detection enable
13	DCDMEN	Data connect detection mode enable 0: Data connect detection disable 1: Data connect detection enable
12	BCDEN	Battery charging detection enable 0: Battery charging detection disable 1: Battery charging detection enable

11:4	Reserved	Must be kept at reset value.
3	PS2F	PS2 detection status, it is active only in Primary detection mode 0: Normal port is detected 1: PS2 port is detected
2	SDF	Secondary detection status 0: CDP is detected 1: DCP is detected
1	PDF	Primary detection status 0: no BCD supported is detected 1: BCD supported is detected
0	DCDF	Data connect detection status 0: Data line connect is not detected 1: Data line connect is detected

Core ID register (USBHS_CID)

Address offset: 0x003C

Reset value: 0x0000 1000

This register contains the Product ID.

This register has to be accessed by word (32-bit)

31	30	29	28	27	26	25	24	23	22	21	20	19	18	17	16
CID[31:16]															
rw															

15	14	13	12	11	10	9	8	7	6	5	4	3	2	1	0
CID[15:0]															
rw															

Bits	Fields	Descriptions
31:0	CID[31:0]	Core ID Software can write or read this field and uses this field as a unique ID for its application.

Global core LPM configuration register (USBHS_GLPMCFG)

Address offset: 0x0054

Reset value: 0x0000 0000

This register has to be accessed by word (32-bit)

31	30	29	28	27	26	25	24	23	22	21	20	19	18	17	16
Reserved			BESLEN	LPMRCS[2:0]			LPMSND	LPMRC[2:0]			LPMCHI[3:0]				RSOK
			rw	r			rs	rw			rw				r

15	14	13	12	11	10	9	8	7	6	5	4	3	2	1	0
LPMSLPS	LPMRSP[1:0]		DSEN	BESLTH[3:0]				SSEN	REW	BESL[3:0]				ACKLPM	LPMEN
r	r		rw	rw				rw	rw/r	rw/r				rw	rw

Bits	Fields	Descriptions
31:29	Reserved	Must be kept at reset value.
28	BESLEN	LPM Errata selection enable 0: USB 2.0 Link Power Management Addendum Engineering Change Notice to the USB 2.0 specification is selected 1: Errata for USB 2.0 ECN: Link Power Management (LPM) is selected
27:25	LPMRCS[2:0]	LPM retry count status **Note:** Only accessible in host mode
24	LPMSND	Send LPM transaction When ACK, STALL or NYET response is received, or all the LPM of retry count have been sent, the hardware clears this bit. **Note:** Only accessible in host mode
23:21	LPMRC[2:0]	LPM retry count It is the number of retry count when an ERROR response is received, until ACK, STALL or NYET response is received **Note:** Only accessible in host mode
20:17	LPMCHI[3:0]	Channel number index when send LPM transaction **Note:** Only accessible in host mode
16	RSOK	Resume can be sent after sleep state Host or device can send resume from sleep state after 50us (TL1Residency). When LPMSLPS is 0, it is reset. 1: Resume can be started from sleep state 0: Resume cannot be started from sleep state
15	LPMSLPS	Sleep status **Host mode:**

		The host transitions to sleep status after receiving ACK response. **Device mode:** The device enters into sleep status after sending ACK response and the TL1TokenRetry timer has been expired. 1: Core is in sleep status 0: Core is not in sleep status
14:13	LPMRSP[1:0]	Response of LPM 11: ACK 10: NYET 01: STALL 00: ERROR (no response)
12	DSEN	Deep sleep enable Enable suspending the PHY in deep sleep mode
11:8	BESLTH[3:0]	BESL threshold **Device mode:** When BESL is greater than or equal to the BESLTH value, device enters into deep low power mode. **Host mode:** BESLTH indicates the duration of resume signal (TL1HubDrvResume2) when it detects device initialed resume. 0000: 75us 0001: 100us 0010: 150us 0011: 250us 0101: 450us 0110: 950us
7	SSEN	Shallow sleep enable Enable suspending the PHY in shallow sleep mode
6	REW	bRemoteWake value **Host mode:** The remote wake up value to be sent in LPM transaction **Device mode (read-only):** When ACK, STALL or NYET is sent, it is updated with bRemoteWake value in received LPM transaction
5:2	BESL[3:0]	Best effort service latency **Host mode:** BESL value to be sent in LPM transaction. It is also the duration of resume (TL1HubDrvResume1) when host initialed resume. **Device mode:** When ACK, STALL or NYET is sent, it is updated with BESL value in received LPM transaction

		0000: 125us 0001: 150us 0010: 200us 0011: 300us 0100: 400us 0101: 500us 0110: 1000us 0111: 2000us 1000: 3000us 1001: 4000us 1010: 5000us 1011: 6000us 1100: 7000us 1101: 8000us 1110: 9000us 1111: 10000us
1	ACKLPM	ACK in LPM transaction enable 1: ACK The device response with ACK only on successful LPM transaction. - No ERROR in LPM transaction - No data pending error - bLinkState = 0001 in received LPM transaction 0: NYET The device response with NYET - The received bLinkState value is not 0001 - There is an error in received LPM transaction **Note:** Only accessible in device mode
0	LPMEN	LPM enable 1: Enable LPM 0: Disable LPM

Power down register (USBHS_PWRD)

Address offset: 0x0058

Reset value: 0x0000 0000

This register has to be accessed by word (32-bit)

31	30	29	28	27	26	25	24	23	22	21	20	19	18	17	16
Reserved								ADPF	Reserved						
								rc_w1							

15	14	13	12	11	10	9	8	7	6	5	4	3	2	1	0

Reserved	ADPMEN
	rw

Bits	Fields	Descriptions
31:24	Reserved	Must be kept at reset value.
23	ADPF	ADP event interrupt flag
22:1	Reserved	Must be kept at reset value.
0	ADPMEN	ADP module enable 1: ADP module is enable 0: ADP module is disable

ADP control and status register (USBHS_ADPCTL)

Address offset: 0x0060

Reset value: 0x0000 0000

In order to write in the register, program RWR with 10 and keep polling until RWR = 00.

In order to read from the register, wait any ADP flag is set or write RWR with 01 and keep polling until RWR = 00.

This register has to be accessed by word (32-bit)

31	30	29	28	27	26	25	24	23	22	21	20	19	18	17	16
Reserved			RWR[1:0]		ADPTFM	ADPSNFM	ADPPRFM	ADPTF	ADPSNF	ADPPRF	ADPEN	ADPRST	SNEN	PREN	CHGT[10]
			rw		rw	rw	rw	rw_w1	rw_w1	rw_w1	rw	rs	rw	rw	r

15	14	13	12	11	10	9	8	7	6	5	4	3	2	1	0
CHGT[9:0]										PERPR[1:0]		RESOPR[1:0]		DSCHGPR[1:0]	
r										rw		rw		rw	

Bits	Fields	Descriptions
31:29	Reserved	Must be kept at reset value.
28:27	RWR[1:0]	Read and write request 00: Read or write valid (updated by core) 01: Read request 10: Write request

26	ADPTFM	The mask of ADP timeout interrupt flag
25	ADPSNFM	The mask of ADP sense interrupt flag
24	ADPPRFM	The mask of ADP probe interrupt flag
23	ADPTF	ADP timeout interrupt flag
22	ADPSNF	ADP sense interrupt flag
21	ADPPRF	ADP probe interrupt flag
20	ADPEN	ADP enable 1: ADP is enable 0: ADP is disable
19	ADPRST	ADP reset This is cleared automatically by core after reset procedure
18	SNEN	ADP sense enable 1: Sense is enable 0: Sense is disable
17	PREN	ADP probe enable 1: Probe is enable 0: Probe is disable
16:6	CHGT[10:0]	The latest time that VBUS ramps from VADPSINK to VADPPRB. These bits are defined in units of 32 kHz clock cycle. 000: 1 cycle 001: 2 cycles 002: 3 cycles 003: 4 cycles … 7ff: 2048 cycles
5:4	PERPR[1:0]	Period of probe 00: 0.625 to 0.925 second 01: 1.25 to 1.85 second 10: 1.9 to 2.6 second
3:2	RESOPR[1:0]	The resolution of CHGT value. These bits are defined in units of 32 kHz clock cycle. If 10 is chosen, the CHGT increments for every three 32 kHz clock cycle. 00: 1 cycle 01: 2 cycles 10: 3 cycles 11: 4 cycles
1:0	DSCHGPR[1:0]	Time of probe discharge 00: 4 ms

01: 8 ms

10: 16 ms

11: 32 ms

Host periodic transmit FIFO length register (USBHS_HPTFLEN)

Address offset: 0x0100

Reset value: 0x0200 0600

This register has to be accessed by word (32-bit)

31	30	29	28	27	26	25	24	23	22	21	20	19	18	17	16
HPTXFD[15:0]															
r/rw															

15	14	13	12	11	10	9	8	7	6	5	4	3	2	1	0
HPTXFSAR[15:0]															
r/rw															

Bits	Fields	Descriptions
31:16	HPTXFD[15:0]	Host Periodic Tx FIFO depth In terms of 32-bit word. 1≤HPTXFD≤1024
15:0	HPTXFSAR[15:0]	Host periodic Tx RAM start address The start address for host periodic transmit FIFO RAM in terms of 32-bit word.

Device IN endpoint transmit FIFO length register (USBHS_DIEPxTFLEN) (x = 1..7, where x is the FIFO_number)

Address offset: 0x0104 + (FIFO_number – 1) × 0x04

Reset value: 0x0200 0400

This register has to be accessed by word (32-bit)

31	30	29	28	27	26	25	24	23	22	21	20	19	18	17	16
IEPTXFD[15:0]															
r/rw															

15	14	13	12	11	10	9	8	7	6	5	4	3	2	1	0

IEPTXRSAR[15:0]
r/rw

Bits	Fields	Descriptions
31:16	IEPTXFD[15:0]	IN endpoint Tx FIFO x depth In terms of 32-bit word. 1≤IEPTXFD≤1024
15:0	IEPTXRSAR[15:0]	IN endpoint FIFOx Tx x RAM start address The start address for IN endpoint transmit FIFO x in terms of 32-bit word.

49.7.2. Host control and status registers

Host control register (USBHS_HCTL)

Address offset: 0x0400

Reset value: 0x0000 0000

This register configures the core after power-on in host mode. Do not modify it after host initialization.

This register has to be accessed by word (32-bit)

31	30	29	28	27	26	25	24	23	22	21	20	19	18	17	16
Reserved															

15	14	13	12	11	10	9	8	7	6	5	4	3	2	1	0
Reserved													SPDFSLS	Reserved	
													rw		

Bits	Fields	Descriptions
31:3	Reserved	Must be kept at reset value.
2	SPDFSLS	Speed limited to FS and LS Software may use this bit to limit USBHS's enumeration speed to FS/LS and make USBHS not perform High-Speed enumeration during reset. 0: Speed not limited. 1: Speed limited in FS/LS only.

1:0	Reserved	Must be kept at reset value.

Host frame interval register (USBHS_HFT)

Address offset: 0x0404

Reset value: 0x0000 EA60

This register sets the frame interval for the current enumerating speed when USBHS controller is enumerating.

This register has to be accessed by word (32-bit)

31	30	29	28	27	26	25	24	23	22	21	20	19	18	17	16
Reserved															

15	14	13	12	11	10	9	8	7	6	5	4	3	2	1	0
FRI[15:0]															
rw															

Bits	Fields	Descriptions
31:16	Reserved	Must be kept at reset value.
15:0	FRI[15:0]	Frame interval This value describes the frame time in terms of PHY clock. Port is enabled after a port reset operation, USBHS uses a proper value according to the current speed, and software can write to this field to change the value. This value should be calculated using the frequency described below: Internal Embedded PHY: High-Speed: 60MHz Full-Speed: 48MHz Low-Speed: 6MHz External ULPI PHY: 60MHz

Host frame information remaining register (USBHS_HFINFR)

Address offset: 0x408

Reset value: 0xEA60 0000

This register has to be accessed by word (32-bit)

31	30	29	28	27	26	25	24	23	22	21	20	19	18	17	16

31	30	29	28	27	26	25	24	23	22	21	20	19	18	17	16
FRT[15:0]															
r															

15	14	13	12	11	10	9	8	7	6	5	4	3	2	1	0
FRNUM[15:0]															
r															

Bits	Fields	Descriptions
31:16	FRT[15:0]	Frame remaining time This field reports the remaining time of current frame in terms of PHY clock.
15:0	FRNUM[15:0]	Frame number This field reports the frame number of current frame and returns to 0 after it reaches 0x3FF.

Host periodic transmit FIFO/queue status register (USBHS_HPTFQSTAT)

Address offset: 0x0410

Reset value: 0x0008 0200

This register reports the current status of the host periodic Tx FIFO and request queue. The request queue holds IN, OUT or other request entries in host mode.

This register has to be accessed by word (32-bit)

31	30	29	28	27	26	25	24	23	22	21	20	19	18	17	16
PTXREQT[7:0]								PTXREQS[7:0]							
r								r							

15	14	13	12	11	10	9	8	7	6	5	4	3	2	1	0
PTXFS[15:0]															
r															

Bits	Fields	Descriptions
31:24	PTXREQT[7:0]	Top entry of the periodic Tx request queue Entry in the periodic transmit request queue. Bit 31: Odd/Even frame

		– 0: send in even frame – 1: send in odd frame Bits 30:27: Channel Number Bits 26:25: – 00: IN/OUT token – 01: Zero-length OUT packet – 11: Channel halt request Bit 24: Terminate Flag, indicating last entry for selected channel.
23:16	PTXREQS[7:0]	Periodic Tx request queue space The remaining space of the periodic transmit request queue. 0: Request queue is Full 1: 1 entry 2: 2 entries … n: n entries (0⩽n⩽8) Others: Reserved
15:0	PTXFS[15:0]	Periodic Tx FIFO space The remaining space of the periodic transmit FIFO. In terms of 32-bit word. 0: periodic Tx FIFO is full 1: 1 word 2: 2 words … n: n words (0⩽n⩽PTXFD) Others: Reserved

Host all channels interrupt register (USBHS_HACHINT)

Address offset: 0x0414

Reset value: 0x0000 0000

When a channel interrupt is triggered, USBHS sets corresponding bit in this register and software should read this register to know which channel is asserting interrupt.

This register has to be accessed by word (32-bit)

31	30	29	28	27	26	25	24	23	22	21	20	19	18	17	16
Reserved															

15	14	13	12	11	10	9	8	7	6	5	4	3	2	1	0

HACHINT[15:0]
r

Bits	Fields	Descriptions
31:16	Reserved	Must be kept at reset value.
15:0	HACHINT[15:0]	Host all channel interrupts Each bit represents a channel: Bit 0 for channel 0, bit 15 for channel 15.

Host all channels interrupt enable register (USBHS_HACHINTEN)

Address offset: 0x0418

Reset value: 0x0000 0000

This register can be used by software to enable or disable a channel's interrupt. Only the channel whose corresponding bit in this register is set is able to cause the channel interrupt flag HCIF in USBHS_GINTF register.

This register has to be accessed by word (32-bit)

31	30	29	28	27	26	25	24	23	22	21	20	19	18	17	16
Reserved															

15	14	13	12	11	10	9	8	7	6	5	4	3	2	1	0
CINTEN[15:0]															
rw															

Bits	Fields	Descriptions
31:16	Reserved	Must be kept at reset value.
15:0	CINTEN[15:0]	Channel interrupt enable 0: Disable channel-n interrupt 1: Enable channel-n interrupt Each bit represents a channel: Bit 0 for channel 0, bit 15 for channel 15.

Host port control and status register (USBHS_HPCS)

Address offset: 0x0440

Reset value: 0x0002 0000

This register controls the port's behavior and also has some flags which report the status of the port. The HPIF flag in USBHS_GINTF register will be triggered if one of these flags in this register is set by USBHS: PRST, PEDC and PCD.

This register has to be accessed by word (32-bit)

31	30	29	28	27	26	25	24	23	22	21	20	19	18	17	16
Reserved													PS[1:0]		PTEST[3]
													r		rw

15	14	13	12	11	10	9	8	7	6	5	4	3	2	1	0
PTEST[2:0]			PP	PLST[1:0]		Reserved	PRST	PSP	PREM	Reserved		PEDC	PE	PCD	PCST
rw			rw	r			rw	rs	rw			rc_w1	rc_w1	rc_w1	r

Bits	Fields	Descriptions
31:19	Reserved	Must be kept at reset value.
18:17	PS[1:0]	Port speed Report the enumerated speed of the device attached to this port. 00: High-Speed 01: Full-Speed 10: Low-Speed Others: Reserved
16:13	PTEST[3:0]	Port Test control The software writes a nonzero value to this field to put the port into a Test mode, and the corresponding pattern is sended on the port. When test mode is used, The HS_CUR_FE bit in USBHS_GUSBCS register should also be set. 0000: Test mode disabled 0001: Test_J mode 0010: Test_K mode 0011: Test_SE0_NAK mode 0100: Test_Packet mode 0101: Test_Force_Enable Others: Reserved
12	PP	Port power This bit should be set before a port is used. Because USBHS doesn't have power supply ability, it only uses this bit to know whether the port is in powered state. Software should ensure the true power supply on V_{BUS} before setting this bit. 0: Port is powered off

		1: Port is powered on
11:10	PLST[1:0]	Port line status Report the current state of USB data lines Bit 10: State of DP line Bit 11: State of DM line
9	Reserved	Must be kept at reset value.
8	PRST	Port reset Application sets this bit to start a reset signal on USB port. Application should clear this bit when it wants to stop the reset signal. 0: Port is not in reset state 1: Port is in reset state
7	PSP	Port suspend Application sets this bit to put port into suspend state. When this bit is set the port stops sending SOF tokens. This bit can only be cleared by the following operations: – PRST bit in this register is set by application – PREM bit in this register is set – A remote wakeup signal is detected – A device disconnection is detected 0: Port is not in suspend state 1: Port is in suspend state
6	PREM	Port resume Application sets this bit to start a resume signal on USB port. Application should clear this bit when it wants to stop the resume signal. 0: No resume driven 1: Resume driven When the application sets PREM in sleep status, the core continues to drive the resume signal until the timer specified with BESLTH has expired. When the core detects a USB remote wakeup, it starts driving the resume signal and clears it automatically at the end of resume.
5:4	Reserved	Must be kept at reset value.
3	PEDC	Port enable/disable change Set by the core when the status of the Port enable bit 2 in this register changes.
2	PE	Port Enable This bit is automatically set by USBHS after a USB reset signal finishes and cannot be set by software. This bit is cleared by the following events: – A disconnection condition – Software clears this bit

		0: Port disabled 1: Port enabled
1	PCD	Port connect detected Set by USBHS when a device connection is detected. This bit can be cleared by writing 1 to this bit.
0	PCST	Port connect status 0: Device is not connected to the port 1: Device is connected to the port

Host channel-x control register (USBHS_HCHxCTL) (x = 0..15, where x = channel_number)

Address offset: 0x0500 + (channel_number × 0x20)

Reset value: 0x0000 0000

This register has to be accessed by word (32-bit)

31	30	29	28	27	26	25	24	23	22	21	20	19	18	17	16
CEN	CDIS	ODDFRM	DAR[6:0]							MPC [1:0]		EPTYPE[1:0]		LSD	Reserved
rs	rs	rw	rw							rw		rw		rw	

15	14	13	12	11	10	9	8	7	6	5	4	3	2	1	0
EPDIR	EPNUM[3:0]				MPL[10:0]										
rw	rw				rw										

Bits	Fields	Descriptions
31	CEN	Channel enable Set by the application and cleared by USBHS. 0: Channel disabled 1: Channel enabled Software should follow the operation guide to disable or enable a channel.
30	CDIS	Channel disable Software can set this bit to disable the channel from processing transactions. Software should follow the operation guide to disable or enable a channel.
29	ODDFRM	Odd frame For periodic transfers (interrupt or isochronous transfer), this bit controls that whether in an odd frame or even frame this channel's transaction is desired to be processed.

		0: Even frame 1: Odd frame
28:22	DAR[6:0]	Device address The address of the USB device that this channel wants to communicate with.
21:20	MPC[1:0]	Multiple Packet Count For periodic transfers, this field indicates to the number of transactions that must be issued per micro-frame. For nonperiodic transfers, it defines how many packets the DMA should fetch or write for this channel before the internal DMA engine changes arbitration. 00: Reserved 01: 1 transaction to be issued per micro-frame 10: 2 transactions to be issued per micro-frame 11: 3 transactions to be issued per micro-frame
19:18	EPTYPE[1:0]	Endpoint type The transfer type of the endpoint that this channel wants to communicate with. 00: Control 01: Isochronous 10: Bulk 11: Interrupt
17	LSD	Low-Speed device The device that this channel wants to communicate with is a Low-Speed Device.
16	Reserved	Must be kept at reset value.
15	EPDIR	Endpoint direction The transfer direction of the endpoint that this channel wants to communicate with. 0: OUT 1: IN
14:11	EPNUM[3:0]	Endpoint number The number of the endpoint that this channel wants to communicate with.
10:0	MPL[10:0]	Maximum packet length The target endpoint's maximum packet length.

Host channel-x split transaction control register (USBHS_HCHxSTCTL) (x = 0..15, where x = channel_number)

Address offset: 0x0504 + (channel_number × 0x20)
Reset value: 0x0000 0000

This register has to be accessed by word (32-bit)

31	30	29	28	27	26	25	24	23	22	21	20	19	18	17	16

SPLEN	Reserved	CSPLT
rs		rw

15	14	13	12	11	10	9	8	7	6	5	4	3	2	1	0
ISOPCE[1:0]		HADDR[6:0]							PADDR[6:0]						
rw		rw							rw						

Bits	Fields	Descriptions
31	SPLEN	Enable High-Speed split transaction Software can set this bit to enable the High-Speed split transaction on this channel. Split transaction is used to initiate a Full-/Low-Speed transaction via the hub and some Full-/Low-Speed device endpoint.
30:17	Reserved	Must be kept at reset value.
16	CSPLT	Complete-split enable Software can set this bit to make USBHS perform complete-split transaction, otherwise, USBHS performs start-split transaction.
15:14	ISOPCE[1:0]	Isochronous OUT Payload Continuation Encoding For Full-Speed isochronous OUT start-split, this field specifies how the High-Speed data payload corresponds to data for a Full-Speed data packet 00: High-Speed data is the middle of the Full-Speed data payload 01: High-Speed data is the end of the Full-Speed data payload 10: High-Speed data is the beginning of the Full-Speed data payload 11: High-Speed data is all of the Full-Speed data payload
13:7	HADDR[6:0]	HUB address This field contains the USB device address of the hub supporting the specified Full-/Low-Speed device for this Full-/Low-Speed transaction.
6:0	PADDR[6:0]	Port address This field contains the port number of the target hub for this Full-/Low-Speed transaction.

Host channel-x interrupt flag register (USBHS_HCHxINTF) (x = 0..15, where x = channel number)

Address offset: 0x0508 + (channel_number × 0x20)
Reset value: 0x0000 0000

This register contains the status and events of a channel, when software gets a channel

interrupt, it should read this register for the respective channel to know the source of the interrupt. The flag bits in this register are all set by hardware and cleared by writing 1.

This register has to be accessed by word (32-bit)

31	30	29	28	27	26	25	24	23	22	21	20	19	18	17	16
Reserved															

15	14	13	12	11	10	9	8	7	6	5	4	3	2	1	0
Reserved					DTER	REQOVR	BBER	USBER	NYET	ACK	NAK	STALL	DMAER	CH	TF
					rc_w1	rc_w1	rc_w1	rc_w1	rc_w1	rc_w1	rc_w1	rc_w1	rc_w1	rc_w1	rc_w1

Bits	Fields	Descriptions
31:11	Reserved	Must be kept at reset value.
10	DTER	Data toggle error The IN transaction gets a data packet but the PID of this packet doesn't match DPID[1:0] bits in USBHS_HCHxLEN register.
9	REQOVR	Request queue overrun The periodic request queue is full when software starts new transfer.
8	BBER	Babble error A babble condition occurs on USB bus. A typical reason for babble condition is that a device sends a data packet and the packet length exceeds to the endpoint's maximum packet length.
7	USBER	USB Bus Error The USB error flag is set when the following conditions occur during receiving a packet: A received packet has a wrong CRC field A stuff error detected on USB bus Timeout when waiting for a response packet
6	NYET	NYET A NYET response packet received (in High-Speed).
5	ACK	ACK An ACK response is received or transmitted
4	NAK	NAK A NAK response is received.
3	STALL	STALL

		A STALL response is received.
2	DMAER	DMA Error An error occurs when DMA tries to fetch or write packet data for this channel.
1	CH	Channel halted When DMA is not enabled: This channel is disabled by the software request. When DMA is enabled: This channel is disabled by DMA because all the transactions of this channel finish successfully or an USB error occurs.
0	TF	Transfer finished All the transactions of this channel finish successfully, and no error occurs. For IN channel, this flag will be triggered after PCNT bit in USBHS_HCHxLEN register reaches to zero. For OUT channel, this flag will be triggered when software reads and pops a TF status entry from the RxFIFO.

Host channel-x interrupt enable register (USBHS_HCHxINTEN) (x = 0..15, where x = channel number)

Address offset: 0x050C + (channel_number × 0x20)
Reset value: 0x0000 0000

This register contains the interrupt enabled bits for the flags in USBHS_HCHxINTF register. If a bit in this register is set by software, the corresponding bit in USBHS_HCHxINTF register is able to trigger a channel interrupt. The bits in this register are set and cleared by software.

This register has to be accessed by word (32-bit)

31	30	29	28	27	26	25	24	23	22	21	20	19	18	17	16
Reserved															

15	14	13	12	11	10	9	8	7	6	5	4	3	2	1	0
Reserved					DTERIE	REQOVRIE	BBERIE	USBERIE	NYETIE	ACKIE	NAKIE	STALLIE	DMAERIE	CHIE	TFIE
					rw	rw	rw	rw	rw	rw	rw	rw	rw	rw	rw

Bits	Fields	Descriptions
31:11	Reserved	Must be kept at reset value.

10	DTERIE	Data toggle error interrupt enable 0: Disable data toggle error interrupt 1: Enable data toggle error interrupt
9	REQOVRIE	Request queue overrun interrupt enable 0: Disable request queue overrun interrupt 1: Enable request queue overrun interrupt
8	BBERIE	Babble error interrupt enable 0: Disable babble error interrupt 1: Enable babble error interrupt
7	USBERIE	USB bus error interrupt enable 0: Disable USB bus error interrupt 1: Enable USB bus error interrupt
6	NYETIE	NYET interrupt enable 0: Disable NYET interrupt 1: Enable NYET interrupt
5	ACKIE	ACK interrupt enable 0: Disable ACK interrupt 1: Enable ACK interrupt
4	NAKIE	NAK interrupt enable 0: Disable NAK interrupt 1: Enable NAK interrupt
3	STALLIE	STALL interrupt enable 0: Disable STALL interrupt 1: Enable STALL interrupt
2	DMAERIE	DMA Error interrupt enable 0: Disable DMA Error interrupt 1: Enable DMA Error interrupt
1	CHIE	Channel halted interrupt enable 0: Disable channel halted interrupt 1: Enable channel halted interrupt
0	TFIE	Transfer finished interrupt enable 0: Disable transfer finished interrupt 1: Enable transfer finished interrupt

Host channel-x transfer length register (USBHS_HCHxLEN) (x = 0..15, where x = channel number)

Address offset: 0x0510 + (channel_number × 0x20)

Reset value: 0x0000 0000

This register has to be accessed by word (32-bit)

31	30	29	28	27	26	25	24	23	22	21	20	19	18	17	16
PING	DPID[1:0]		PCNT[9:0]										TLEN[18:16]		
rw	rw		rw											rw	

15	14	13	12	11	10	9	8	7	6	5	4	3	2	1	0
TLEN[15:0]															
rw															

Bits	Fields	Descriptions
31	PING	PING token request For OUT transfer, USBHS will perform PING protocol if software sets this bit. USBHS will automatically set this bit when an OUT transaction receives a NAK or NYET handshake. Do not set this bit for IN transfer.
30:29	DPID[1:0]	Data PID Software should write this field before the transfer starts. For OUT transfer, this field controls the Data PID of the first transmitted packet. For IN transfer, this field controls the expected Data PID of the first received packet, and DTERR will be triggered if the Data PID doesn't match. After the transfer starts, USBHS changes and toggles this field automatically following the USB protocol. 00: DATA0 01: DATA2 10: DATA1 11: MDATA (non-control)/SETUP (control)
28:19	PCNT[9:0]	Packet count The number of data packets desired to be transmitted (OUT) or received (IN) in transfer. Software should program this field before the channel is enabled. After the transfer starts, this field is decreased automatically by USBHS after each successful data packet transmission.
18:0	TLEN[18:0]	Transfer length The total data bytes number of a transfer. For OUT transfer, this field is the total data bytes of all the data packets desired to be transmitted in an OUT transfer. Software should program this field before the channel is enabled. When software or DMA successfully writes a packet into the channel's data TxFIFO, this field is decreased by the byte size of the packet. For IN transfer each time software or DMA reads out a packet from the RxFIFO, this field is decreased by the byte size of the packet.

Host channel-x DMA address register (USBHS_HCHxDMAADDR) (x = 0..15, where x = channel number)

Address offset: 0x0514 + (channel_number × 0x20)
Reset value: 0x0000 0000

This register has to be accessed by word (32-bit)

31	30	29	28	27	26	25	24	23	22	21	20	19	18	17	16
DMAADDR[31:16]															
rw															

15	14	13	12	11	10	9	8	7	6	5	4	3	2	1	0
DMAADDR[15:0]															
rw															

Bits	Fields	Descriptions
31:0	DMAADDR[31:0]	DMA address This field defines the endpoint's DMA address. DMA uses this address to fetch or write packet data for this channel.

49.7.3. Device control and status registers

Device configuration register (USBHS_DCFG)

Address offset: 0x0800
Reset value: 0x0000 0000

This register configures the core in device mode after power-on or after certain control commands or enumeration. Do not change this register after device initialization.

This register has to be accessed by word (32-bit)

31	30	29	28	27	26	25	24	23	22	21	20	19	18	17	16
Reserved															

15	14	13	12	11	10	9	8	7	6	5	4	3	2	1	0

Reserved	EOPFT[1:0]	DAR[6:0]	Reserved	NZLSOH	DS[1:0]
	rw	rw		rw	rw

Bits	Fields	Descriptions
31:13	Reserved	Must be kept at reset value.
12:11	EOPFT[1:0]	End of periodic frame time This field defines the percentage time point in a frame when the end of periodic frame (EOPF) flag should be triggered. 00: 80% of the frame time 01: 85% of the frame time 10: 90% of the frame time 11: 95% of the frame time
10:4	DAR[6:0]	Device address This field defines the USB device's address. USBHS uses this field to match with the incoming token's device address field. Software should program this field after receiving a Set Address command from USB host.
3	Reserved	Must be kept at reset value.
2	NZLSOH	Non-zero-length status OUT handshake When a USB device receives a non-zero-length data packet during status OUT stage, this field controls that USBHS should receive this packet or reject this packet with a STALL handshake. 0: Treat this packet as a normal packet and response according to the status of NAKS and STALL bits in USBHS_DOEPxCTL register. 1: Send a STALL handshake and don't save the received OUT packet.
1:0	DS[1:0]	Device speed This field controls the device speed when the device is connected to a host. 00: High-Speed 01: Full-Speed Others: Reserved

Device control register (USBHS_DCTL)

Address offset: 0x0804

Reset value: 0x0000 0000

This register has to be accessed by word (32-bit)

31	30	29	28	27	26	25	24	23	22	21	20	19	18	17	16

Reserved	L1RJCT	Reserved
	rw	

15	14	13	12	11	10	9	8	7	6	5	4	3	2	1	0
Reserved				POIF	CGONAK	SGONAK	CGINAK	SGINAK	DTEST[2:0]			GONS	GINS	SD	RWKUP
				rw	w	w	w	w	rw			r	r	rw	rw

Bits	Fields	Descriptions
31:19	Reserved	Must be kept at reset value.
18	L1RJCT	Deep sleep reject When this bit is set, the core response NYET for LPM transaction with BESL greater than BSELTH.
17:12	Reserved	Must be kept at reset value.
11	POIF	Power-on initialization finished Software should set this bit to notify USBHS that the registers are initialized after waking up from power off state.
10	CGONAK	Clear global OUT NAK Software sets this bit to clear GONS bit in this register.
9	SGONAK	Set global OUT NAK Software sets this bit to set GONS bit in this register. When GONS bit is zero, setting this bit will also cause GONAK flag in USBHS_GINTF register triggered after a while. Software should clear the GONAK flag before writing this bit again.
8	CGINAK	Clear global IN NAK Software sets this bit to clear GINS bit in this register.
7	SGINAK	Set global IN NAK Software sets this bit to set GINS bit in this register. When GINS bit is zero, setting this bit will also cause GINAK flag in USBHS_GINTF register triggered after a while. Software should clear the GINAK flag before writing this bit again.
6:4	DTEST[2:0]	Device Test control The software writes a nonzero value to this field to put the port into a Test mode, and the corresponding pattern is sended on the port. When test mode is used, the HS_CUR_FE bit in USBHS_GUSBCS register should also be set. 000: Test mode disabled

		001: Test_J mode 010: Test_K mode 011: Test_SE0_NAK mode 100: Test_Packet mode 101: Test_Force_Enable Others: Reserved
3	GONS	Global OUT NAK status 0: The handshake that USBHS response to OUT transaction packet and whether to save the OUT data packet are decided by Rx FIFO status, endpoint's NAK and STALL bits. 1: USHBS always responses to OUT transaction with NAK handshake and doesn't save the incoming OUT data packet.
2	GINS	Global IN NAK status 0: The response to IN transaction is decided by Tx FIFO status, endpoint's NAK and STALL bits. 1: USHBS always responses to IN transaction with a NAK handshake.
1	SD	Soft disconnect Software can use this bit to generate a soft disconnect condition on USB bus. After this bit is set, USBHS first falls back to Full-Speed if currently operating at High-Speed, and then switches off the pull up resistor on DP line. This will cause the host to detect a device disconnect. 0: No soft disconnect generated. 1: Generate a soft disconnect.
0	RWKUP	Remote wakeup In suspend state, software can use this bit to generate a Remote wake up signal to inform host that it should resume the USB bus. 0: No remote wakeup signal generated. 1: Generate remote wakeup signal. When the core is LPM enabled and in sleep status, if this bit is set, the core continues to drive it and clears it automatically after 50us (TL1DevDrvResume). The application cannot set this bit when bRemoteWake value received from LPM transaction is zero.

Device status register (USBHS_DSTAT)

Address offset: 0x0808

Reset value: 0x0000 0000

This register contains status and information of the USBHS in device mode.

This register has to be accessed by word (32-bit)

31	30	29	28	27	26	25	24	23	22	21	20	19	18	17	16

Reserved	FNRSOF[13:8]
	r

15	14	13	12	11	10	9	8	7	6	5	4	3	2	1	0
FNRSOF[7:0]								Reserved					ES[1:0]		SPST
r													r		r

Bits	Fields	Descriptions
31:22	Reserved	Must be kept at reset value.
21:8	FNRSOF[13:0]	The frame number of the received SOF. USBHS always update this field after receiving a SOF token.
7:3	Reserved	Must be kept at reset value.
2:1	ES[1:0]	Enumerated speed This field reports the enumerated device speed. Software should read this field after the ENUMF flag in USBHS_GINTF register is triggered. 00: High-Speed 01: Full-Speed Others: reserved
0	SPST	Suspend status This bit reports whether device is in suspend state. 0: Device is in suspend state. 1: Device is not in suspend state.

Device IN endpoint common interrupt enable register (USBHS_DIEPINTEN)

Address offset: 0x810
Reset value: 0x0000 0000

This register contains the interrupt enabled bits for the flags in USBHS_DIEPxINTF register. If a bit in this register is set by software, the corresponding bit in USBHS_DIEPxINTF register is able to trigger an endpoint interrupt in USBHS_DAEPINT register. The bits in this register are set and cleared by software.

This register has to be accessed by word (32-bit)

31	30	29	28	27	26	25	24	23	22	21	20	19	18	17	16
Reserved															

15	14	13	12	11	10	9	8	7	6	5	4	3	2	1	0
Reserved		NAKEN	Reserved						IEPNEEN	Reserved	EPTXFUDEN	CITOEN	Reserved	EPDISEN	TFEN
		rw							rw		rw	rw		rw	rw

Bits	Fields	Descriptions
31:14	Reserved	Must be kept at reset value.
13	NAKEN	NAK handshake sent by USBHS interrupt enable bit 0: Disable interrupt 1: Enable interrupt
12:7	Reserved	Must be kept at reset value.
6	IEPNEEN	IN endpoint NAK effective interrupt enable bit 0: Disable interrupt 1: Enable interrupt
5	Reserved	Must be kept at reset value.
4	EPTXFUDEN	Endpoint Tx FIFO underrun interrupt enable bit 0: Disable interrupt 1: Enable interrupt
3	CITOEN	Control In Timeout interrupt enable bit 0: Disable interrupt 1: Enable interrupt
2	Reserved	Must be kept at reset value.
1	EPDISEN	Endpoint disabled interrupt enable bit 0: Disable interrupt 1: Enable interrupt
0	TFEN	Transfer finished interrupt enable bit 0: Disable interrupt 1: Enable interrupt

Device OUT endpoint common interrupt enable register (USBHS_DOEPINTEN)

Address offset: 0x0814

Reset value: 0x0000 0000

This register contains the interrupt enabled bits for the flags in USBHS_DOEPxINTF register. If a bit in this register is set by software, the corresponding bit in USBHS_DOEPxINTF register is able to trigger an endpoint interrupt in USBHS_DAEPINT

register. The bits in this register are set and cleared by software.

This register has to be accessed by word (32-bit)

31	30	29	28	27	26	25	24	23	22	21	20	19	18	17	16
Reserved															

15	14	13	12	11	10	9	8	7	6	5	4	3	2	1	0
Reserved	NYETEN	Reserved							BTBSTPEN	Reserved	EPRXFOVREN	STPFEN	Reserved	EPDISEN	TFEN
	rw								rw		rw	rw		rw	rw

Bits	Fields	Descriptions
31:15	Reserved	Must be kept at reset value.
14	NYETEN	Send NYET handshake interrupt enable bit 0: Disable interrupt 1: Enable interrupt
13:7	Reserved	Must be kept at reset value.
6	BTBSTPEN	Back-to-back SETUP packets (Only for control OUT endpoint) interrupt enable bit 0: Disable interrupt 1: Enable interrupt
5	Reserved	Must be kept at reset value.
4	EPRXFOVREN	Endpoint Rx FIFO overrun interrupt enable bit 0: Disable interrupt 1: Enable interrupt
3	STPFEN	SETUP phase finished (Only for control OUT endpoint) interrupt enable bit 0: Disable interrupt 1: Enable interrupt
2	Reserved	Must be kept at reset value.
1	EPDISEN	Endpoint disabled interrupt enable bit 0: Disable interrupt 1: Enable interrupt
0	TFEN	Transfer finished interrupt enable bit 0: Disable interrupt 1: Enable interrupt

Device all endpoints interrupt register (USBHS_DAEPINT)

Address offset: 0x0818

Reset value: 0x0000 0000

When an endpoint interrupt is triggered, USBHS sets corresponding bit in this register and software should read this register to know which endpoint is asserting an interrupt.

This register has to be accessed by word (32-bit)

31	30	29	28	27	26	25	24	23	22	21	20	19	18	17	16
Reserved								OEPITB[7:0]							
								r							

15	14	13	12	11	10	9	8	7	6	5	4	3	2	1	0
Reserved								IEPITB[7:0]							
								r							

Bits	Fields	Descriptions
31:24	Reserved	Must be kept at reset value.
23:16	OEPITB[7:0]	Device all OUT endpoints interrupt bits Each bit represents an OUT endpoint: Bit 16 for OUT endpoint 0, bit 23 for OUT endpoint 7.
15:8	Reserved	Must be kept at reset value.
7:0	IEPITB[7:0]	Device all IN endpoints interrupt bits Each bit represents an IN endpoint: Bit 0 for IN endpoint 0, bit 7 for IN endpoint 7.

Device all endpoints interrupt enable register (USBHS_DAEPINTEN)

Address offset: 0x081C

Reset value: 0x0000 0000

This register can be used by software to enable or disable an endpoint's interrupt. Only the endpoint whose corresponding bit in this register is set is able to cause the endpoint interrupt flag OEPIF or IEPIF in USBHS_GINTF register.

This register has to be accessed by word (32-bit)

31	30	29	28	27	26	25	24	23	22	21	20	19	18	17	16

Reserved	OEPIE[7:0]
	r

15	14	13	12	11	10	9	8	7	6	5	4	3	2	1	0
Reserved								IEPIE[7:0]							
								r							

Bits	Fields	Descriptions
31:24	Reserved	Must be kept at reset value.
23:16	OEPIE[7:0]	Out endpoint interrupt enable 0: Disable OUT endpoint-n interrupt 1: Enable OUT endpoint-n interrupt Each bit represents an OUT endpoint: Bit 16 for OUT endpoint 0, bit 23 for OUT endpoint 7.
15:8	Reserved	Must be kept at reset value.
7:0	IEPIE[7:0]	IN endpoint interrupt enable bits 0: Disable IN endpoint-n interrupt 1: Enable IN endpoint-n interrupt Each bit represents an IN endpoint: Bit 0 for IN endpoint 0, bit 7 for IN endpoint 7.

Device VBUS discharge time register (USBHS_DVBUSDT)

Address offset: 0x0828

Reset value: 0x0000 17D7

This register has to be accessed by word (32-bit)

31	30	29	28	27	26	25	24	23	22	21	20	19	18	17	16
Reserved															

15	14	13	12	11	10	9	8	7	6	5	4	3	2	1	0
DVBUSDT[15:0]															
rw															

Bits	Fields	Descriptions
31:16	Reserved	Must be kept at reset value.
15:0	DVBUSDT[15:0]	Device V_{BUS} discharge time There is a discharge process after V_{BUS} pulsing in SRP protocol. This field defines the discharge time of V_{BUS}. The true discharge time is 1024*DVBUSDT[15:0] *$T_{USBCLOCK}$, where $T_{USBCLOCK}$ is the period time of USB clock.

Device VBUS pulsing time register (USBHS_DVBUSPT)

Address offset: 0x082C

Reset value: 0x0000 05B8

This register has to be accessed by word (32-bit)

31	30	29	28	27	26	25	24	23	22	21	20	19	18	17	16
Reserved															

15	14	13	12	11	10	9	8	7	6	5	4	3	2	1	0
Reserved				DVBUSPT[11:0]											
										rw					

Bits	Fields	Descriptions
31:12	Reserved	Must be kept at reset value.
11:0	DVBUSPT[11:0]	Device V_{BUS} pulsing time This field defines the pulsing time for V_{BUS}. The true pulsing time is 1024*DVBUSPT[11:0] *$T_{USBCLOCK}$, where $T_{USBCLOCK}$ is the period time of USB clock.

Device IN endpoint FIFO empty interrupt enable register (USBHS_DIEPFEINTEN)

Address offset: 0x0834

Reset value: 0x0000 0000

This register contains the enabled bits for the Tx FIFO empty interrupts of IN endpoints.

This register has to be accessed by word (32-bit)

31	30	29	28	27	26	25	24	23	22	21	20	19	18	17	16

Reserved

15	14	13	12	11	10	9	8	7	6	5	4	3	2	1	0
Reserved								IEPTXFEIE[7:0]							
								rw							

Bits	Fields	Descriptions
31:8	Reserved	Must be kept at reset value.
7:0	IEPTXFEIE[7:0]	IN endpoint Tx FIFO empty interrupt enable bits This field controls whether the TXFE bit in USBHS_DIEPxINTF register is able to generate an endpoint interrupt bit in USBHS_DAEPINT register. Bit 0 for IN endpoint 0, bit 7 for IN endpoint 7 0: Disable FIFO empty interrupt 1: Enable FIFO empty interrupt

Device endpoint 1 interrupt register (USBHS_DEP1INT)

Address offset: 0x0838
Reset value: 0x0000 0000

When ep1 out or in interrupt is triggered, USBHS sets corresponding bit in this register and software should read this register to know which endpoint is asserting the ep1 interrupt.

This register has to be accessed by word (32-bit)

31	30	29	28	27	26	25	24	23	22	21	20	19	18	17	16
reserved														OEP1INT	reserved
														r	

15	14	13	12	11	10	9	8	7	6	5	4	3	2	1	0
reserved														IEP1INT	reserved
														r	

Bits	Fields	Descriptions
31:18	Reserved	Must be kept at reset value.

17	OEP1INT	OUT Endpoint 1 interrupt
16:2	Reserved	Must be kept at reset value.
1	IEP1INT	IN Endpoint 1 interrupt
0	Reserved	Must be kept at reset value.

Device endpoint 1 interrupt enable register (USBHS_DEP1INTEN)

Address offset: 0x083C
Reset value: 0x0000 0000

This register can be used by software to enable or disable endpoint-1's interrupt. Only the endpoint whose corresponding bit in this register is set is able to cause the endpoint-1 in or out interrupt.

This register has to be accessed by word (32-bit)

31	30	29	28	27	26	25	24	23	22	21	20	19	18	17	16
reserved														OEP1INTEN	reserved
														r	

15	14	13	12	11	10	9	8	7	6	5	4	3	2	1	0
reserved														IEP1INTEN	reserved
														r	

Bits	Fields	Descriptions
31:18	Reserved	Must be kept at reset value.
17	OEP1INTEN	OUT Endpoint 1 interrupt enable
16:2	Reserved	Must be kept at reset value.
1	IEP1INTEN	IN Endpoint 1 interrupt enable
0	Reserved	Must be kept at reset value.

Device IN endpoint-1 interrupt enable register (USBHS_DIEP1INTEN)

Address offset: 0x844
Reset value: 0x0000 0000

This register contains the interrupt enable bits for the flags in USBHS_DIEP1INTF register. If a bit in this register is set by software, the corresponding bit in USBHS_DIEP1INTF register is able to trigger an endpoint interrupt in USBHS_DEP1INT register. The bits in this

register are set and cleared by software.

This register has to be accessed by word (32-bit)

31	30	29	28	27	26	25	24	23	22	21	20	19	18	17	16
Reserved															

15	14	13	12	11	10	9	8	7	6	5	4	3	2	1	0
Reserved		NAKEN	Reserved						IEPNEEN	Reserved	EPTXFUDEN	CITOEN	Reserved	EPDISEN	TFEN
		rw							rw		rw	rw		rw	rw

Bits	Fields	Descriptions
31:14	Reserved	Must be kept at reset value.
13	NAKEN	Interrupt enable bit of NAK handshake sent by USBHS 0: Disable interrupt 1: Enable interrupt
12:7	Reserved	Must be kept at reset value.
6	IEPNEEN	IN endpoint NAK effective interrupt enable bit 0: Disable interrupt 1: Enable interrupt
5	Reserved	Must be kept at reset value.
4	EPTXFUDEN	Endpoint Tx FIFO underrun interrupt enable bit 0: Disable interrupt 1: Enable interrupt
3	CITOEN	Control In Timeout interrupt enable bit 0: Disable interrupt 1: Enable interrupt
2	Reserved	Must be kept at reset value.
1	EPDISEN	Endpoint disabled interrupt enable bit 0: Disable interrupt 1: Enable interrupt
0	TFEN	Transfer finished interrupt enable bit 0: Disable interrupt 1: Enable interrupt

Device OUT endpoint-1 interrupt enable register (USBHS_DOEP1INTEN)

Address offset: 0x0884

Reset value: 0x0000 0000

This register contains the interrupt enabled bits for the flags in USBHS_DOEP1INTF register. If a bit in this register is set by software, the corresponding bit in USBHS_DOEP1INTF register is able to trigger an endpoint interrupt in USBHS_DEP1INT register. The bits in this register are set and cleared by software.

This register has to be accessed by word (32-bit)

31	30	29	28	27	26	25	24	23	22	21	20	19	18	17	16
Reserved															

15	14	13	12	11	10	9	8	7	6	5	4	3	2	1	0
Reserved	NYETEN	Reserved							BTBSTPEN	Reserved	EPRXFOVREN	STPFEN	Reserved	EPDISEN	TFEN
	rw								rw		rw	rw		rw	rw

Bits	Fields	Descriptions
31:15	Reserved	Must be kept at reset value.
14	NYETEN	Send NYET handshake interrupt enable bit 0: Disable interrupt 1: Enable interrupt
13:7	Reserved	Must be kept at reset value.
6	BTBSTPEN	Back-to-back SETUP packets (Only for control OUT endpoint) interrupt enable bit 0: Disable interrupt 1: Enable interrupt
5	Reserved	Must be kept at reset value.
4	EPRXFOVREN	Endpoint Rx FIFO overrun interrupt enable bit 0: Disable interrupt 1: Enable interrupt
3	STPFEN	SETUP phase finished (Only for control OUT endpoint) interrupt enable bit 0: Disable interrupt 1: Enable interrupt
2	Reserved	Must be kept at reset value.
1	EPDISEN	Endpoint disabled interrupt enable bit

		0: Disable interrupt 1: Enable interrupt
0	TFEN	Transfer finished interrupt enable bit 0: Disable interrupt 1: Enable interrupt

Device IN endpoint 0 control register (USBHS_DIEP0CTL)

Address offset: 0x0900

Reset value: 0x0000 8000

This register has to be accessed by word (32-bit)

31	30	29	28	27	26	25	24	23	22	21	20	19	18	17	16
EPEN	EPD	Reserved		SNAK	CNAK	TXFNUM[3:0]				STALL	Reserved	EPTYPE[1:0]		NAKS	Reserved
rs	rs			w	w	rw				rs		r	r	r	

15	14	13	12	11	10	9	8	7	6	5	4	3	2	1	0
EPACT	Reserved													MPL[1:0]	
r														rw	

Bits	Fields	Descriptions
31	EPEN	Endpoint enable Set by the application and cleared by USBHS. 0: Endpoint disabled 1: Endpoint enabled Software should follow the operation guide to disable or enable an endpoint.
30	EPD	Endpoint disable Software can set this bit to disable the endpoint. Software should follow the operation guide to disable or enable an endpoint.
29:28	Reserved	Must be kept at reset value.
27	SNAK	Set NAK Software sets this bit to set NAKS bit in this register.
26	CNAK	Clear NAK Software sets this bit to clear NAKS bit in this register.
25:22	TXFNUM[3:0]	Tx FIFO number Define the Tx FIFO number of IN endpoint 0.

21	STALL	STALL handshake Software can set this bit to make USBHS send STALL handshake when receiving IN token. USBHS will clear this bit after a SETUP token is received on the corresponding OUT endpoint 0. This bit has a higher priority than NAKS bit in this register and GINS bit in USBHS_DCTL register. If both STALL and NAKS bits are set, the STALL bit takes effect.
20	Reserved	Must be kept at reset value.
19:18	EPTYPE[1:0]	Endpoint type This field is fixed to ‘00’ for control endpoint.
17	NAKS	NAK status This bit controls the NAK status of USBHS when both STALL bit in this register and GINS bit in USBHS_DCTL register are cleared: 0: USBHS sends data or handshake packets according to the status of the endpoint’s Tx FIFO. 1: USBHS always sends NAK handshake to the IN token. This bit is read-only and software should use CNAK and SNAK in this register to control this bit.
16	Reserved	Must be kept at reset value.
15	EPACT	Endpoint active This field is fixed to ‘1’ for endpoint 0.
14:2	Reserved	Must be kept at reset value.
1:0	MPL[1:0]	Maximum packet length This field defines the maximum packet length for a control data packet. As described in USB 2.0 protocol, there are 4 kinds of length for control transfers: 00: 64 bytes 01: 32 bytes 10: 16 bytes 11: 8 bytes

Device IN endpoint-x control register (USBHS_DIEPxCTL) (x = 1..7, where x = endpoint_number)

Address offset: 0x0900 + (endpoint_number × 0x20)
Reset value: 0x0000 0000

This register has to be accessed by word (32-bit)

31	30	29	28	27	26	25	24	23	22	21	20	19	18	17	16
EPEN	EPD	SODDFRM/SD1PID	SD0PID/SEVENFRM	SNAK	CNAK	TXFNUM[3:0]				STALL	Reserved	EPTYPE[1:0]		NAKS	EOFRM/DPID

rs	rs	w	w	w	w	rw	rw/rs	rw	r	r
15	14	13	12	11	10	9	8	7	6	5	4	3	2	1	0
EPACT	Reserved				MPL[10:0]										
rw					rw										

Bits	Fields	Descriptions
31	EPEN	Endpoint enable Set by the application and cleared by USBHS. 0: Endpoint disabled 1: Endpoint enabled Software should follow the operation guide to disable or enable an endpoint.
30	EPD	Endpoint disable Software can set this bit to disable the endpoint. Software should following the operation guide to disable or enable an endpoint.
29	SODDFRM	Set odd frame (For isochronous IN endpoints) This bit has effect only if this is an isochronous IN endpoint. Software sets this bit to set EOFRM bit in this register.
	SD1PID	Set DATA1 PID (For interrupt/bulk IN endpoints) Software sets this bit to set DPID bit in this register.
28	SEVENFRM	Set even frame (For isochronous IN endpoints) Software sets this bit to clear EOFRM bit in this register.
	SD0PID	Set DATA0 PID (For interrupt/bulk IN endpoints) Software sets this bit to clear DPID bit in this register.
27	SNAK	Set NAK Software sets this bit to set NAKS bit in this register.
26	CNAK	Clear NAK Software sets this bit to clear NAKS bit in this register.
25:22	TXFNUM[3:0]	Tx FIFO number Defines the Tx FIFO number of this IN endpoint.
21	STALL	STALL handshake Software can set this bit to make USBHS send STALL handshake when receiving IN token. This bit has a higher priority than NAKS bit in this register and GINS bit in USBHS_DCTL register. If both STALL and NAKS bits are set, the STALL bit takes effect. For control IN endpoint: Only USBHS can clear this bit when a SETUP token is received on the corresponding OUT endpoint. Software is not able to clear it.

		For interrupt or bulk IN endpoint: Only software can clear this bit
20	Reserved	Must be kept at reset value.
19:18	EPTYPE[1:0]	Endpoint type This field defines the transfer type of this endpoint: 00: Control 01: Isochronous 10: Bulk 11: Interrupt
17	NAKS	NAK status This bit controls the NAK status of USBHS when both STALL bit in this register and GINS bit in USBHS_DCTL register are cleared: 0: USBHS sends data or handshake packets according to the status of the endpoint's Tx FIFO. 1: USBHS always sends NAK handshake to the IN token. This bit is read-only and software should use CNAK and SNAK in this register to control this bit.
16	EOFRM	Even/odd frame (For isochronous IN endpoints) For isochronous transfer, software can use this bit to control that USBHS only sends data packets for IN tokens in even or odd frames. If the current frame number's parity doesn't match with this bit, USBHS only responses with a zero-length packet. 0: Only sends data in even frames 1: Only sends data in odd frames
	DPID	Endpoint data PID (For interrupt/bulk IN endpoints) These is a data PID toggle scheme in interrupt or bulk transfer. Software should set SD0PID to set this bit before a transfer starts and USBHS maintains this bit during transfers by following the data toggle scheme described in USB protocol. 0: Data packet's PID is DATA0 1: Data packet's PID is DATA1
15	EPACT	Endpoint active This bit controls whether this endpoint is active. If an endpoint is not active, it ignores all tokens and doesn't make any response.
14:11	Reserved	Must be kept at reset value.
10:0	MPL[10:0]	This field defines the maximum packet length in bytes.

Device OUT endpoint 0 control register (USBHS_DOEP0CTL)

Address offset: 0x0B00

Reset value: 0x0000 8000

This register has to be accessed by word (32-bit)

31	30	29	28	27	26	25	24	23	22	21	20	19	18	17	16
EPEN	EPD	Reserved		SNAK	CNAK	Reserved				STALL	SNOOP	EPTYPE[1:0]		NAKS	Reserved
rs	r			w	w					rs	rw	r		r	

15	14	13	12	11	10	9	8	7	6	5	4	3	2	1	0
EPACT	Reserved													MPL[10:0]	
r														r	

Bits	Fields	Descriptions
31	EPEN	Endpoint enable Set by the application and cleared by USBHS. 0: Endpoint disabled 1: Endpoint enabled Software should follow the operation guide to disable or enable an endpoint.
30	EPD	Endpoint disable This bit is fixed to 0 for OUT endpoint 0.
29:28	Reserved	Must be kept at reset value.
27	SNAK	Set NAK Software sets this bit to set NAKS bit in this register.
26	CNAK	Clear NAK Software sets this bit to clear NAKS bit in this register
25:22	Reserved	Must be kept at reset value.
21	STALL	STALL handshake Software can set this bit to make USBHS send STALL handshake during an OUT transaction. USBHS will clear this bit after a SETUP token is received on OUT endpoint 0. This bit has a higher priority than NAKS bit in this register, i.e. if both STALL and NAKS bits are set, the STALL bit takes effect.
20	SNOOP	Snoop mode This bit controls the snoop mode of an OUT endpoint. In snoop mode, USBHS doesn't check the received data packet's CRC value. 0: Snoop mode disabled 1: Snoop mode enabled
19:18	EPTYPE[1:0]	Endpoint type This field is fixed to '00' for control endpoint.
17	NAKS	NAK status

		This bit controls the NAK status of USBHS when both STALL bit in this register and GONS bit in USBHS_DCTL register are cleared: 0: USBHS sends data or handshake packets according to the status of the endpoint's Rx FIFO. 1: USBHS always sends NAK handshake to the OUT token. This bit is read-only and software should use CNAK and SNAK in this register to control this bit.
16	Reserved	Must be kept at reset value.
15	EPACT	Endpoint active This field is fixed to '1' for endpoint 0.
14:2	Reserved	Must be kept at reset value.
1:0	MPL[1:0]	Maximum packet length This is a read-only field, and its value comes from the MPL field of USBHS_DIEP0CTL register: 00: 64 bytes 01: 32 bytes 10: 16 bytes 11: 8 bytes

Device OUT endpoint-x control register (USBHS_DOEPxCTL) (x = 1..7, where x = endpoint_number)

Address offset: 0x0B00 + (endpoint_number × 0x20)
Reset value: 0x0000 0000

The application uses this register to control the operation of each logical OUT endpoint other than OUT endpoint 0.

This register has to be accessed by word (32-bit)

31	30	29	28	27	26	25	24	23	22	21	20	19	18	17	16
EPEN	EPD	SODDFRM/SD1PID	SEVENFRM / SD0PID	SNAK	CNAK	Reserved				STALL	SNOOP	EPTYPE[1:0]		NAKS	EOFRM/DPID
rs	rs	w	w	w	w					rw/rs	rw	rw		r	r

15	14	13	12	11	10	9	8	7	6	5	4	3	2	1	0
EPACT	Reserved				MPL[10:0]										
rw										rw					

Bits	Fields	Descriptions

31	EPEN	Endpoint enable Set by the application and cleared by USBHS. 0: Endpoint disabled 1: Endpoint enabled Software should follow the operation guide to disable or enable an endpoint.
30	EPD	Endpoint disable Software can set this bit to disable the endpoint. Software should follow the operation guide to disable or enable an endpoint.
29	SODDFRM	Set odd frame (For isochronous OUT endpoints) This bit has effect only if this is an isochronous OUT endpoint. Software sets this bit to set EOFRM bit in this register.
	SD1PID	Set DATA1 PID (For interrupt/bulk OUT endpoints) Software sets this bit to set DPID bit in this register.
28	SEVENFRM	Set even frame (For isochronous OUT endpoints) Software sets this bit to clear EOFRM bit in this register.
	SD0PID	Set DATA0 PID (For interrupt/bulk OUT endpoints) Software sets this bit to clear DPID bit in this register.
27	SNAK	Set NAK Software sets this bit to set NAKS bit in this register.
26	CNAK	Clear NAK Software sets this bit to clear NAKS bit in this register.
25:22	Reserved	Must be kept at reset value.
21	STALL	STALL handshake Software can set this bit to make USBHS send STALL handshake during an OUT transaction. This bit has a higher priority than NAKS bit in this register and GINS in USBHS_DCTL register. If both STALL and NAKS bits are set, the STALL bit takes effect. For control OUT endpoint: Only USBHS can clear this bit when a SETUP token is received on the corresponding OUT endpoint. Software is not able to clear it. For interrupt or bulk OUT endpoint: Only software can clear this bit.
20	SNOOP	Snoop mode This bit controls the snoop mode of an OUT endpoint. In snoop mode, USBHS doesn't check the received data packet's CRC value. 0: Snoop mode disabled 1: Snoop mode enabled
19:18	EPTYPE[1:0]	Endpoint type This field defines the transfer type of this endpoint:

		00: Control 01: Isochronous 10: Bulk 11: Interrupt
17	NAKS	NAK status This bit controls the NAK status of USBHS when both STALL bit in this register and GONS bit in USBHS_DCTL register are cleared: 0: USBHS sends handshake packets according to the status of the endpoint's Rx FIFO. 1: USBHS always sends NAK handshake to the OUT token. This bit is read-only and software should use CNAK and SNAK in this register to control this bit.
16	EOFRM	Even/odd frame (For isochronous OUT endpoints) For isochronous transfer, software can use this bit to control that USBHS only receives data packets in even or odd frames. If the current frame number's parity doesn't match with this bit, USBHS just drops the data packet. 0: Only sends data in even frames 1: Only sends data in odd frames
	DPID	Endpoint data PID (For interrupt/bulk OUT endpoints) These is a data PID toggle scheme in interrupt or bulk transfer. Software should set SD0PID to set this bit before a transfer starts and USBHS maintains this bit during transfer following the data toggle scheme described in USB protocol. 0: Data packet's PID is DATA0 1: Data packet's PID is DATA1
15	EPACT	Endpoint active This bit controls whether this endpoint is active. If an endpoint is not active, it ignores all tokens and doesn't make any response.
14:11	Reserved	Must be kept at reset value.
10:0	MPL[10:0]	This field defines the maximum packet length in bytes.

Device IN endpoint-x interrupt flag register (USBHS_DIEPxINTF) (x = 0..7, where x = endpoint_number)

Address offset: 0x0908 + (endpoint_number × 0x20)
Reset value: 0x0000 0080

This register contains the status and events of an IN endpoint, when software gets an IN endpoint interrupt, it should read this register for the respective endpoint to know the source of the interrupt. The flag bits in this register are all set by hardware and cleared by writing 1 except the read-only TXFE bit.

This register has to be accessed by word (32-bit)

31	30	29	28	27	26	25	24	23	22	21	20	19	18	17	16
Reserved															

15	14	13	12	11	10	9	8	7	6	5	4	3	2	1	0
Reserved		NAK	Reserved					TXFE	IEPNE	Reserved	EPTXFUD	CITO	Reserved	EPDIS	TF
		rc_w1						r	rc_w1		rc_w1	rc_w1		rc_w1	rc_w1

Bits	Fields	Descriptions
31:14	Reserved	Must be kept at reset value.
13	NAK	NAK handshake sent by USBHS USBHS sets this bit after it sends out a NAK handshake because the NAKS bit in USBHS_DIEPxCTL register is set, or there is no packet data in endpoint's Tx FIFO.
12:8	Reserved	Must be kept at reset value.
7	TXFE	Transmit FIFO empty The Tx FIFO of this IN endpoint has reached the empty threshold value defined by TXFTH field in USBHS_GAHBCS register.
6	IEPNE	IN endpoint NAK effective The setting of SNAK bit in USBHS_DIEPxCTL register takes effect. This bit can be cleared either by writing 1 to it or by setting CNAK bit in USBHS_DIEPxCTL register.
5	Reserved	Must be kept at reset value.
4	EPTXFUD	Endpoint Tx FIFO underrun This flag is triggered if the Tx FIFO has no packet data when an IN token is incoming
3	CITO	Control In Timeout interrupt This flag is triggered if the device waiting for a handshake is timeout in a control IN transaction.
2	Reserved	Must be kept at reset value.
1	EPDIS	Endpoint disabled This flag is triggered when an endpoint is disabled from the software's request.
0	TF	Transfer finished This flag is triggered when all the IN transactions assigned to this endpoint have finished.

Device OUT endpoint-x interrupt flag register (USBHS_DOEPxINTF) (x = 0..7, where x = endpoint_number)

Address offset: 0x0B08 + (endpoint_number × 0x20)
Reset value: 0x0000 0000

This register contains the status and events of an OUT endpoint, when software gets an OUT endpoint interrupt, it should read this register for the respective endpoint to know the source of the interrupt. The flag bits in this register are all set by hardware and cleared by writing 1.

This register has to be accessed by word (32-bit)

31	30	29	28	27	26	25	24	23	22	21	20	19	18	17	16
Reserved															

15	14	13	12	11	10	9	8	7	6	5	4	3	2	1	0
Reserved	NYET	Reserved							BTBSTP	Reserved	EPRXFOVR	STPF	Reserved	EPDIS	TF
	rc_w1								rc_w1/rw		rc_w1	rc_w1		rc_w1	rc_w1

Bits	Fields	Descriptions
31:15	Reserved	Must be kept at reset value.
14	NYET	NYET handshake is sent This flag is triggered if a NYET handshake is sent by USBHS.
13:7	Reserved	Must be kept at reset value.
6	BTBSTP	Back-to-back SETUP packets (Only for control OUT endpoint) This flag is triggered when a control out endpoint has received more than 3 back-to-back setup packets.
5	Reserved	Must be kept at reset value.
4	EPRXFOVR	Endpoint Rx FIFO overrun This flag is triggered if the OUT endpoint's Rx FIFO has no enough space for a packet data when an OUT token is incoming. USBHS will drop the incoming OUT data packet and send a NAK handshake in this case.
3	STPF	SETUP phase finished (Only for control OUT endpoint) This flag is triggered when a setup phase finished, i.e. USBHS receives an IN or OUT token after a setup token.

2	Reserved	Must be kept at reset value.
1	EPDIS	Endpoint disabled This flag is triggered when an endpoint is disabled from the software's request.
0	TF	Transfer finished This flag is triggered when all the OUT transactions assigned to this endpoint have finished.

Device IN endpoint 0 transfer length register (USBHS_DIEP0LEN)

Address offset: 0x0910

Reset value: 0x0000 0000

This register has to be accessed by word (32-bit)

31	30	29	28	27	26	25	24	23	22	21	20	19	18	17	16
Reserved											PCNT[1:0]		Reserved		
											rw				

15	14	13	12	11	10	9	8	7	6	5	4	3	2	1	0
Reserved									TLEN[6:0]						
									rw						

Bits	Fields	Descriptions
31:21	Reserved	Must be kept at reset value.
20:19	PCNT[1:0]	Packet count The number of data packets desired to be transmitted in a transfer. Software should program this field before the endpoint is enabled. After the transfer starts, this field is decreased automatically by USBHS after each successful data packet transmission.
18:7	Reserved	Must be kept at reset value.
6:0	TLEN[6:0]	Transfer length The total data bytes number of a transfer. This field is the total data bytes of all the data packets desired to be transmitted in an IN transfer. Software should program this field before the endpoint is enabled. When software or DMA successfully writes a packet into the endpoint's Tx FIFO, this field is decreased by the byte size of the packet.

Device OUT endpoint 0 transfer length register (USBHS_DOEP0LEN)

Address offset: 0x0B10

Reset value: 0x0000 0000

This register has to be accessed by word (32-bit)

31	30	29	28	27	26	25	24	23	22	21	20	19	18	17	16
Reserved	STPCNT[1:0]		Reserved									PCNT	Reserved		
	rw											rw			

15	14	13	12	11	10	9	8	7	6	5	4	3	2	1	0
Reserved									TLEN[6:0]						
												rw			

Bits	Fields	Descriptions
31	Reserved	Must be kept at reset value.
30:29	STPCNT[1:0]	SETUP packet count This field defines the maximum number of back-to-back SETUP packets what this endpoint can accept. Software should program this field before setup transfers. Each time a back-to-back setup packet is received, USBHS decreases this field by one. When this field reaches zero, the BTBSTP flag in USBHS_DOEP0INTF register will be triggered. 00: 0 packet 01: 1 packet 10: 2 packets 11: 3 packets
28:20	Reserved	Must be kept at reset value.
19	PCNT	Packet count The number of data packets is desired to receive in a transfer. Software should program this field before the endpoint is enabled. After the transfer starts, this field is decreased automatically by USBHS after each successful data packet reception on bus.
18:7	Reserved	Must be kept at reset value.
6:0	TLEN[6:0]	Transfer length The total data bytes number of a transfer. This field is the total data bytes of all the data packets desired to receive in an OUT transfer. Software should program this field before the endpoint is enabled. Each time software or DMA reads out a packet from the Rx FIFO, this field is decreased

by the byte size of the packet.

Device IN endpoint-x transfer length register (USBHS_DIEPxLEN) (x = 1..7, where x = endpoint_number)

Address offset: 0x910 + (endpoint_number × 0x20)

Reset value: 0x0000 0000

This register has to be accessed by word (32-bit)

31	30	29	28	27	26	25	24	23	22	21	20	19	18	17	16
Reserved	MCNT[1:0]		PCNT[9:0]										TLEN[18:16]		
	rw		rw										rw		

15	14	13	12	11	10	9	8	7	6	5	4	3	2	1	0
TLEN[15:0]															
rw															

Bits	Fields	Descriptions
31	Reserved	Must be kept at reset value.
30:29	MCNT[1:0]	Multi count This field indicates the number of packets which should be transmitted in a frame 01: 1 packet 10: 2 packets 11: 3 packets
28:19	PCNT[9:0]	Packet count The number of data packets desired to be transmitted in a transfer. Software should program this field before the endpoint is enabled. After the transfer starts, this field is decreased automatically by USBHS after each successful data packet transmission.
18:0	TLEN[18:0]	Transfer length The total data bytes number of a transfer. This field is the total data bytes of all the data packets desired to be transmitted in an IN transfer. Software should program this field before the endpoint is enabled. When software or DMA successfully writes a packet into the endpoint's Tx FIFO, this field is decreased by the byte size of the packet.

Device OUT endpoint-x transfer length register (USBHS_DOEPxLEN) (x = 1..7, where x = endpoint_number)

Address offset: 0x0B10 + (endpoint_number × 0x20)

Reset value: 0x0000 0000

This register has to be accessed by word (32-bit)

31	30	29	28	27	26	25	24	23	22	21	20	19	18	17	16
Res	RXDPID/STPCNT[1:0]		PCNT[9:0]										TLEN[18:16]		
	r/rw		rw										rw		

15	14	13	12	11	10	9	8	7	6	5	4	3	2	1	0
TLEN[15:0]															
rw															

Bits	Fields	Descriptions
31	Reserved	Must be kept at reset value.
30:29	RXDPID[1:0]	Received data PID (For isochronous OUT endpoints) This field saves the PID of the latest received data packet on this endpoint. 00: DATA0 01: DATA2 10: DATA1 11: MDATA
	STPCNT[1:0]	SETUP packet count (For control OUT Endpoints.) This field defines the maximum number back-to-back SETUP packets this endpoint can accept. Software should program this field before setup transfers. Each time a back-to-back setup packet is received, USBHS decreases this field by one. When this field reaches zero, the BTBSTP flag in USBHS_DOEPxINTF register will be triggered. 00: 0 packet 01: 1 packet 10: 2 packets 11: 3 packets
28:19	PCNT[9:0]	Packet count The number of data packets desired to receive in a transfer. Software should program this field before the endpoint is enabled. After the transfer starts, this field is decreased automatically by USBHS after each successful data packet reception on bus.

18:0	TLEN[18:0]	Transfer length The total data bytes number of a transfer. This field is the total data bytes of all the data packets desired to receive in an OUT transfer. Software should program this field before the endpoint is enabled. Each time software or DMA reads out a packet from the RxFIFO, this field is decreased by the byte size of the packet.

Device IN endpoint-x DMA address register (USBHS_DIEPxDMAADDR) / Device OUT endpoint-x DMA address register (USBHS_DOEPxDMAADDR) (x = 0..7, where x = endpoint_number)

Address offset:
IN endpoint: 0x0914 + (endpoint_number × 0x20)
OUT endpoint: 0x0B14 + (endpoint_number × 0x20)
Reset value: 0x0000 0000

This register has to be accessed by word (32-bit)

31	30	29	28	27	26	25	24	23	22	21	20	19	18	17	16
DMAADDR[31:16]															
rw															

15	14	13	12	11	10	9	8	7	6	5	4	3	2	1	0
DMAADDR[15:0]															
rw															

Bits	Fields	Descriptions
31:0	DMAADDR[31:0]	DMA address This field defines the endpoint's DMA address. DMA uses this address to fetch packet data for IN endpoint or write packet data for OUT endpoint.

Device IN endpoint-x transmit FIFO status register (USBHS_DIEPxTFSTAT) (x = 0..7, where x = endpoint_number)

Address offset: 0x0918 + (endpoint_number × 0x20)
Reset value: 0x0000 0200

This register contains the information of each endpoint's Tx FIFO.

This register has to be accessed by word (32-bit)

31	30	29	28	27	26	25	24	23	22	21	20	19	18	17	16

Reserved

15	14	13	12	11	10	9	8	7	6	5	4	3	2	1	0
IEPTFS[15:0]															
r															

Bits	Fields	Descriptions
31:16	Reserved	Must be kept at reset value.
15:0	IEPTFS[15:0]	IN endpoint's Tx FIFO space remaining IN endpoint's Tx FIFO space remaining in 32-bit word: 0: FIFO is full 1: 1 word available … n: n words available

49.7.4. Power and clock control register (USBHS_PWRCLKCTL)

Address offset: 0x0E00

Reset value: 0x0000 0000

This register has to be accessed by word (32-bit)

31	30	29	28	27	26	25	24	23	22	21	20	19	18	17	16
Reserved															

15	14	13	12	11	10	9	8	7	6	5	4	3	2	1	0
Reserved								DSLEEP	SSLEEP	SCGEN	SUSP	Reserved		SHCLK	SUCLK
								r	r	r/w	r			rw	rw

Bits	Fields	Descriptions
31:8	Reserved	Must be kept at reset value.
7	DSLEEP	PHY is in deep sleep status

6	SSLEEP	PHY is in shallow sleep status
5	SCGEN	When this bit is set, the internal clock gating is enabled.
4	SUSP	PHY is in suspend status
3:2	Reserved	Must be kept at reset value.
1	SHCLK	Stop HCLK Stop the HCLK to save power. 0: HCLK is not stopped 1: HCLK is stopped
0	SUCLK	Stop the USB clock Stop the USB clock to save power. 0: USB clock is not stopped 1: UCB clock is stopped

50. Appendix

50.1. List of abbreviations used in register

Table 50-1. List of abbreviations used in register

abbreviations for registers	Descriptions
read/write (rw)	Software can read and write to this bit.
read-only (r)	Software can only read this bit.
write-only (w)	Software can only write to this bit. Reading this bit returns the reset value.
read/clear write 1 (rc_w1)	Software can read as well as clear this bit by writing 1. Writing 0 has no effect on the bit value.
read/clear write 0 (rc_w0)	Software can read as well as clear this bit by writing 0. Writing 1 has no effect on the bit value.
toggle (t)	The software can toggle this bit by writing 1. Writing 0 has no effect.
read/set (rs)	Software can read as well as set this bit to 1. Writing ‘0’ has no effect on the bit value.
read/clear by read (rc_r)	Software can read this bit. Reading this bit automatically clears it to ‘0’. Writing ‘0’ has no effect on the bit value.

50.2. List of terms

Table 50-2. List of terms

Glossary	Descriptions
Word	Data of 32-bit length.
Half-word	Data of 16-bit length.
Byte	Data of 8-bit length.
IAP (in-application programming)	Writing 0 has no effect IAP is the ability to re-program the Flash memory of a microcontroller while the user program is running.
ICP (in-circuit programming)	ICP is the ability to program the Flash memory of a microcontroller using the JTAG protocol, the SWD protocol or the boot loader while the device is mounted on the user application board.
Option bytes	Product configuration bits stored in the Flash memory.
AHB	Advanced high-performance bus.
APB	Advanced peripheral bus.
RAZ	Read-as-zero.
WI	Writes ignored.
RAZ/WI	Read-as-zero, writes ignored.

50.3. Available peripherals

For availability of peripherals and their number across all MCU series types, refer to the corresponding device data datasheet.

51. Revision history

Table 51-1. Revision history

Revision No.	Description	Date
1.0	Initial Release	May 6, 2023
1.1	1. Update ***HPDF Block Diagram***、***High-Performance Digital Filter (HPDF)*** and ***Threshold monitor*** chapter. 2. Update ***Controller area network (CAN)*** chapter overview description. 3. Update ***I/O compensation cell code configuration register (SYSCFG_CPSCCCFG)*** register bit field description. 4. Update ***Alternate function selected register 0 (GPIOx_AFSEL0, x=A...H, J, K)*** and ***Alternate function selected register 1 (GPIOx_AFSEL1, x=A…H, J, K)*** register bit field description. 5. Update ***Figure 20 1. ADC module block diagram.*** 6. Update the USART module ***Receive / Transmitter FIFO*** chapter description. 7. Update GPIO and AFIO module ***Input filtering*** and ***Input filtering register (GPIOx_IFL, x=A...H, J, K) chapter description.*** 8. Update CPDM module ***Configuration register (CPDM_CFG)*** register bit field description. 9. Update CMP module ***Status register (CMP_STAT)*** and ***Interrupt flag clear register (CMP_IFC)*** description. 10. Update TRNG module ***Control register (TRNG_CTL)*** register bit field description. 11. Update ***Power management unit (PMU)*** chapter description. 12. Update ***Global USB control and status register (USBHS_GUSBCS)*** description. 13. Update SAI module ***Register definition*** access attribute. 14. Update IAP module ***Interrupt flag clear register (IPA_INTC)*** description.	July 21, 2023
1.2	1. Update RTDEC module ***Figure 46-3. Decryption flow with AES-128 in CTR mode***. 2. Update ***Trigonometric Math Unit (TMU)*** chapter description. 3. Update ***Low power digital temperature sensor (LPDTS*** chapter description. 4. Update RSPDIF module ***Figure 33-11. RSPDIF states***. 5. Upadate ***Controller area network (CAN)*** chapter	Jan 4, 2024

Revision No.	Description	Date
	description. 6. Update ***System and memory architecture*** c 7. Update RCU module ***Figure 6-2. Clock tree***. 8. Update ***Clock configuration register 1 (RCU_CFG1)*** register reset value. 9. Update SDIO module ***Figure 36-13. 8-bit data bus width***. 10. Update ***Comparator (CMP)*** chapter description.	
1.3	1. Update TSCFG4[4:0] bit field description of section ***1.8.21, 1.8.24, 1.8.27***. 2. Update ***Power management unit (PMU)*** chapter description. 3. Update EXTI module ***Table 8 2. Interrupt vector table.*** 4. Update ***Trigger selection controller (TRIGSEL)*** chapter description. 5. Update GPIO module overview chapter description. 6. Update TRNG module ***Figure 12 1. TRNG block diagram.*** 7. Add ***TMU precision*** description. 8. Update DMAMUX module ***Table 18 2. Request multiplexer input mapping***. 9. Update ADC module ***Table 20 7. Some examples show the maximum output results for N and M combimations (grayed values indicates truncation，for 12bit ADC).*** 10. Update ***WWDGT*** register base address. 11. Update ***TIMER module Table24-9 、Table24-13 and Table24-17*** description. 12. Update ***Inter-integrated circuit interface (I2C)*** module Analog filter delay time 13. Update ***TFT-LCD interface (TLI)*** module TLI_LxFLLEN register FLL[13:0] description. 14. Update ***Receiver of Sony/Philips Digital Interface (RSPDIF)*** chapter description. 15. Update ***Controller area network (CAN)*** chapter description. 16. Update ***Real-time decryption (RTDEC)*** chapter description. 17. Update ***Hardware semaphore(HWSEM)*** INTEN register reset value, INTC register abbreviations. 18. Update ***Universal serial bus High-Speed interface (USBHS)*** chapter 49.7.1、49.7.2 description.	May 10, 2024

Important Notice

This document is the property of GigaDevice Semiconductor Inc. and its subsidiaries (the "Company"). This document, including any product of the Company described in this document (the “Product”), is owned by the Company under the intellectual property laws and treaties of the People’s Republic of China and other jurisdictions worldwide. The Company reserves all rights under such laws and treaties and does not grant any license under its patents, copyrights, trademarks, or other intellectual property rights. The names and brands of third party referred thereto (if any) are the property of their respective owner and referred to for identification purposes only.

The Company makes no warranty of any kind, express or implied, with regard to this document or any Product, including, but not limited to, the implied warranties of merchantability and fitness for a particular purpose. The Company does not assume any liability arising out of the application or use of any Product described in this document. Any information provided in this document is provided only for reference purposes. It is the responsibility of the user of this document to properly design, program, and test the functionality and safety of any application made of this information and any resulting product. Except for customized products which has been expressly identified in the applicable agreement, the Products are designed, developed, and/or manufactured for ordinary business, industrial, personal, and/or household applications only. The Products are not designed, intended, or authorized for use as components in systems designed or intended for the operation of weapons, weapons systems, nuclear installations, atomic energy control instruments, combustion control instruments, airplane or spaceship instruments, transportation instruments, traffic signal instruments, life-support devices or systems, other medical devices or systems (including resuscitation equipment and surgical implants), pollution control or hazardous substances management, or other uses where the failure of the device or Product could cause personal injury, death, property or environmental damage ("Unintended Uses"). Customers shall take any and all actions to ensure using and selling the Products in accordance with the applicable laws and regulations. The Company is not liable, in whole or in part, and customers shall and hereby do release the Company as well as it’s suppliers and/or distributors from any claim, damage, or other liability arising from or related to all Unintended Uses of the Products. Customers shall indemnify and hold the Company as well as it’s suppliers and/or distributors harmless from and against all claims, costs, damages, and other liabilities, including claims for personal injury or death, arising from or related to any Unintended Uses of the Products.

Information in this document is provided solely in connection with the Products. The Company reserves the right to make changes, corrections, modifications or improvements to this document and Products and services described herein at any time, without notice.

© 2024 GigaDevice – All rights reserved